Service Guide

HP 70900B

Local Oscillator Source



HP Part No. 70900-90293
Printed in USA June 1995

Edition A.0.0

Notice

The information contained in this document is subject to change without notice.

Hewlett-Packard makes no warranty of any kind with regard to this material, including, but not limited to, the implied warranties of merchantability and fitness for a particular purpose. Hewlett-Packard shall not be liable for errors contained herein or for incidental or consequential damages in connection with the furnishing, performance, or use of this material.

Restricted Rights Legend.

Use, duplication, or disclosure by the U.S. Government is subject to restrictions as set forth in subparagraph (c) (1) (ii) of the Rights in Technical Data and Computer Software clause at DFARS 252.227-7013 for DOD agencies, and subparagraphs (c) (1) and (c) (2) of the Commercial Computer Software Restricted Rights clause at FAR 52.227-19 for other agencies.

©Copyright Hewlett-Packard Company 1989, 1990, 1995

All Rights Reserved. Reproduction, adaptation, or translation without prior written permission is prohibited, except as allowed under the copyright laws.
1400 Fountaingrove Parkway, Santa Rosa, CA 95403-1799, USA

Certification

Hewlett-Packard Company certifies that this product met its published specifications at the time of shipment from the factory. Hewlett-Packard further certifies that its calibration measurements are traceable to the United States National Institute of Standards and Technology, to the extent allowed by the Institute's calibration facility, and to the calibration facilities of other International Standards Organization members.

Warranty

This Hewlett-Packard instrument product is warranted against defects in material and workmanship for a period of one year from date of shipment. During the warranty period, Hewlett-Packard Company will, at its option, either repair or replace products which prove to be defective.

For warranty service or repair, this product must be returned to a service facility designated by Hewlett-Packard. Buyer shall prepay shipping charges to Hewlett-Packard and Hewlett-Packard shall pay shipping charges to return the product to Buyer. However, Buyer shall pay all shipping charges, duties, and taxes for products returned to Hewlett-Packard from another country.

Hewlett-Packard warrants that its software and firmware designated by Hewlett-Packard for use with an instrument will execute its programming instructions when properly installed on that instrument. Hewlett-Packard does not warrant that the operation of the instrument, or software, or firmware will be uninterrupted or error-free.

Limitation of Warranty

The foregoing warranty shall not apply to defects resulting from improper or inadequate maintenance by Buyer, Buyer-supplied software or interfacing, unauthorized modification or misuse, operation outside of the environmental specifications for the product, or improper site preparation or maintenance.

NO OTHER WARRANTY IS EXPRESSED OR IMPLIED. HEWLETT-PACKARD SPECIFICALLY DISCLAIMS THE IMPLIED WARRANTIES OF MERCHANTABILITY AND FITNESS FOR A PARTICULAR PURPOSE.

Exclusive Remedies

THE REMEDIES PROVIDED HEREIN ARE BUYER'S SOLE AND EXCLUSIVE REMEDIES. HEWLETT-PACKARD SHALL NOT BE LIABLE FOR ANY DIRECT, INDIRECT, SPECIAL, INCIDENTAL, OR CONSEQUENTIAL DAMAGES, WHETHER BASED ON CONTRACT, TORT, OR ANY OTHER LEGAL THEORY.

Assistance

Product maintenance agreements and other customer assistance agreements are available for Hewlett-Packard products.

For any assistance, contact your nearest Hewlett-Packard Sales and Service Office.

Safety Symbols

The following safety symbols are used throughout this manual. Familiarize yourself with each of the symbols and its meaning before operating this instrument.

CAUTION	The *CAUTION* sign denotes a hazard. It calls attention to a procedure which, if not correctly performed or adhered to, could result in damage to or destruction of the product or the user's work. Do not proceed beyond a *CAUTION* sign until the indicated conditions are fully understood and met.
WARNING	**The *WARNING* sign denotes a hazard. It calls attention to a procedure which, if not correctly performed or adhered to, could result in injury to the user. Do not proceed beyond a *WARNING* sign until the indicated conditions are fully understood and met.**
DANGER	**The *DANGER* sign denotes an imminent hazard to people. It warns the reader of a procedure which, if not correctly performed or adhered to, could result in injury or loss of life. Do not proceed beyond a *DANGER* sign until the indicated conditions are fully understood and met.**

General Safety Considerations

WARNING

- **The instructions in this document are for use by qualified personnel only. To avoid electrical shock, do not perform any servicing unless you are qualified to do so.**
- **The opening of covers or removal of parts is likely to expose dangerous voltages. Disconnect the instrument from all voltage sources while it is being opened.**
- **The power cord is connected to internal capacitors that may remain live for five seconds after disconnecting the plug from its power supply.**
- **This is a Safety Class 1 Product (provided with a protective earthing ground incorporated in the power cord). The mains plug shall only be inserted in a socket outlet provided with a protective earth contact. Any interruption of the protective conductor inside or outside of the instrument is likely to make the instrument dangerous. Intentional interruption is prohibited.**
- **For continued protection against fire hazard, replace fuse only with same type and ratings, (type nA/nV). The use of other fuses or materials is prohibited.**

WARNING

- **Before this instrument is switched on, make sure it has been properly grounded through the protective conductor of the ac power cable to a socket outlet provided with protective earth contact.**

  Any interruption of the protective (grounding) conductor, inside or outside the instrument, or disconnection of the protective earth terminal can result in personal injury.
- **Before this instrument is switched on, make sure its primary power circuitry has been adapted to the voltage of the ac power source.**

  Failure to set the ac power input to the correct voltage could cause damage to the instrument when the ac power cable is plugged in.

Servicing at a Glance

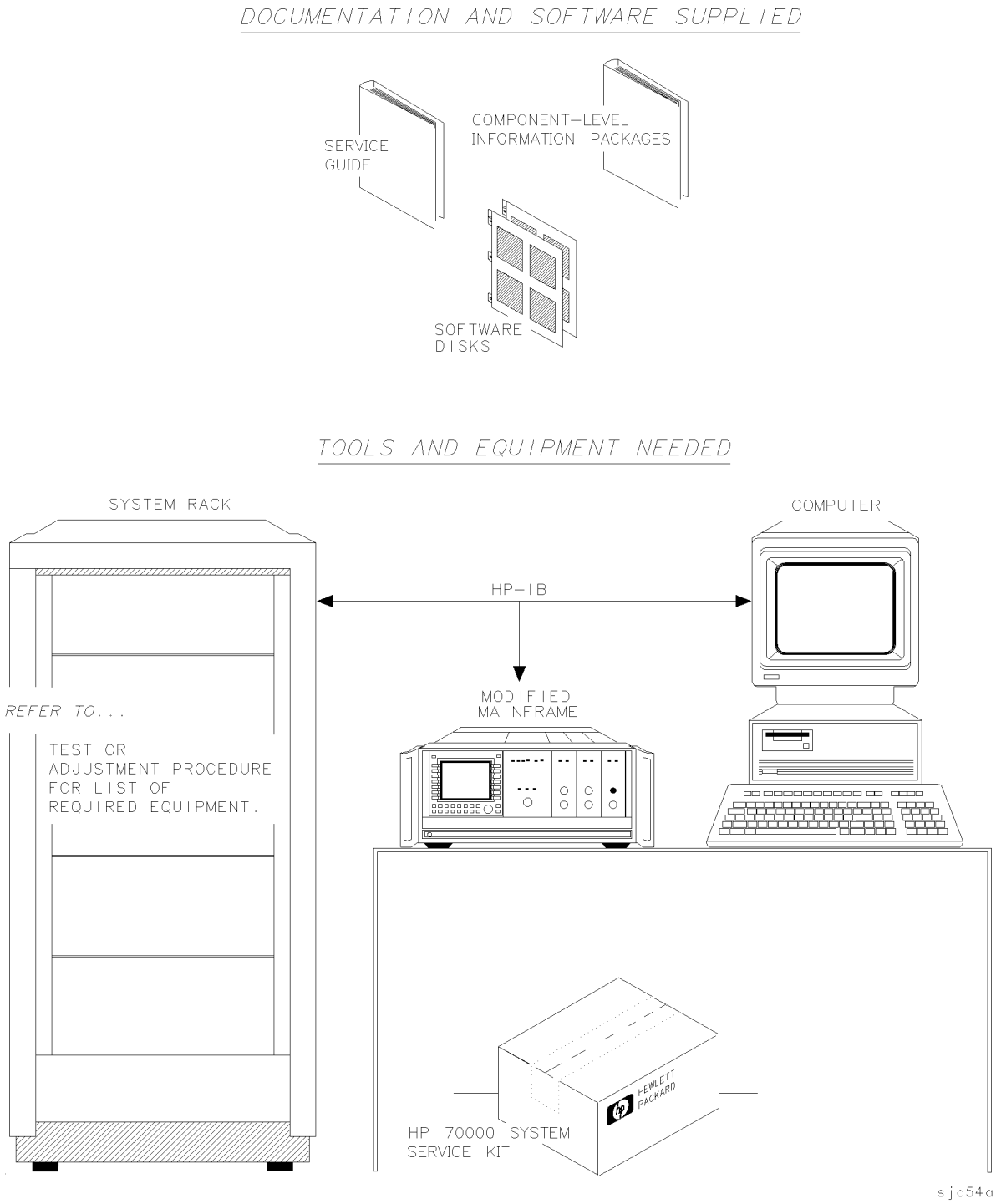

The local oscillator source is a module that is used in HP 70000 Series modular measurement systems. A standard modular spectrum analyzer system includes a mainframe with an RF section, IF section, local oscillator, an optional display, and an optional precision frequency reference.

Software and documentation supplied This service guide is part of an Option OB3 package which includes:

- *HP 70900B Service Guide*
- *HP 70900B Component Level Information Packages*
- Module verification software disks.

Tools needed Before servicing, refer to Chapter 5 for a list of the tools and accessories that may be needed during servicing.

Antistatic precautions Electrical components are easily damaged by small amounts of static electricity. If possible, work at a static-safe work station. For further information, refer to "Preparing a Static-Safe Work Station" in Chapter 4.

In This Book

This book describes all of the service procedures necessary to test, adjust, calibrate, troubleshoot, and repair your local oscillator source in an HP 70000 Series modular measurement system.

Each module in the HP 70000 Series modular measurement system has its own service guide. For further information related to the servicing of additional and alternate modules that can be used in this system, refer to that module's service guide.

This service guide is part of an Option OB3 package which consists of two manuals.

Manual 1

Chapter 1 provides information to help get you started so that your local oscillator source is serviced properly.

Chapter 2 contains information needed to use module verification software while servicing your local oscillator source.

Chapter 3 contains information to help identify and resolve some common problems that may occur with your local oscillator source before extensive servicing.

Chapter 4 contains information about troubleshooting your local oscillator source. It presents information on preparing a static-safe work station and then it presents a set of troubleshooting procedures that can be used to optimize repair time.

Chapter 5 contains tables with a complete listing of all equipment that may be required for servicing.

Chapter 6 contains the setups for all adjustment procedures that are used to optimize module performance when assemblies are changed, repaired, or adjusted.

Chapter 7 contains the setups for all module verification tests that are used to optimize module performance when assemblies are changed, repaired, or adjusted.

Chapter 8 contains the setups for all equipment calibration procedures that must be performed in order to optimize module performance when assemblies are changed, repaired, or adjusted.

Chapter 9 contains procedures for removal and replacement of major assemblies in your local oscillator source. It also contains information needed to order mechanical parts for your local oscillator source.

Chapter 10 contains information on all overall parts identification drawings that should be used when performing the troubleshooting procedures descibed in this service guide.

An index is also added at the end of this service guide to aid the user in finding key items of interest.

Manual 2

Manual 2 contains packets of component-level repair information for each local oscillator source board assembly that has field-replaceable parts. Each packet includes the parts list, component-location drawing, and schematics for a specific board-assembly part number. This manual also contains a table that can be used to cross reference different board assemblies that have different serial prefix breaks.

Before you begin servicing, you must become familiar with module verification software. For information on how to use this module verification software, refer to Chapter 2.

Contents

1. Getting Started

What Is Servicing? 1-2
When Is Servicing Needed? 1-2
If You Want Hewlett-Packard to Service Your Local Oscillator Source 1-3
Determining Your Local Oscillator Source's Serial Number 1-3
Returning Your Local Oscillator Source for Service 1-5

2. Module Verification Software

Computer Compatibility 2-2
Alternate Key Labels 2-2
Computer Language Compatibility 2-2
Printer Compatibility 2-3
Configuring the Hardware 2-4
Installing Module Verification Software 2-5
Module Verification Software Overview 2-7
Testing Multiple Modules 2-7
Error Messages or Warnings Defined 2-7
Final Tests Defined 2-7
Single Tests Defined 2-8
Printing Test Results 2-8
Menus 2-9
Menu Structure 2-9
Edit and Command Screen Menus 2-9
Edit Screen Menus 2-9
Command Screen Menus 2-9
Cursor Keys and Menu Selections 2-10
Main Menu 2-11
Mass Storage Menu 2-11
Mass Storage Menu Edit Screen 2-12
Mass Storage Menu Command Screen 2-12
Parameter Menu 2-12
Parameter Menu Edit Screen 2-12
Parameter Menu Command Screen 2-13
Equipment Menu 2-13
Equipment Menu Edit Screen 2-14
Equipment Menu Command Screen 2-14
Edit Calibration Data 2-15
Edit Calibration Data Edit Screen 2-16
Edit Calibration Data Command Screen 2-16
HP-MSIB Address Menu 2-16
Test Menu 2-16
Test Menu Command Screen 2-17
Error and Status Messages 2-23

3. Before Extensive Servicing
If the System's Power-On Self Test Fails . . . 3-2
If Your HP 70900B Local Oscillator Source Is Powered On But Not Responding Correctly . . . 3-4
If the STATUS ERR Indicator LED on the HP 70900B Local Oscillator Source is Flashing . . . 3-5
If More Than One Module's Error Indicator Is Flashing . . . 3-6

4. Troubleshooting
Preparing a Static-Safe Work Station . . . 4-2
Troubleshooting Flow Chart . . . 4-4
If Operating Errors Messages (2000–2999) Occur . . . 4-7
If Hardware Error Messages (7000–7999) Occur . . . 4-8
If Series 8000 Error Messages (8000–8999) Occur . . . 4-18
If Series 9000 Error Messages (9000–9999) Occur . . . 4-19
A1A1 Host/Processor and A1A2 1/4 MB RAM/ROM Troubleshooting . . . 4-20
A3 Power Supply Troubleshooting . . . 4-23
A4 Idler Phase-Lock Loop Troubleshooting . . . 4-25
A6 YTO Phase-Lock Loop/A8 Frequency Control Troubleshooting . . . 4-31
A7 FRAC'N Synthesizer Troubleshooting . . . 4-37
If You Have Verification Test Failures . . . 4-40
If You Have Adjustment Procedure Failures . . . 4-47
Performing Related Adjustments and Verification Tests . . . 4-53
The State Worksheet . . . 4-57
Overall Block Diagram of Local Oscillator Source . . . 4-59

5. Recommended Test Equipment Tables
300 MHz Up-Converter Construction Procedure . . . 5-4
Sniffer Loop Construction Procedure . . . 5-9
Resistive Divider Construction Procedure . . . 5-10

6. Adjustment Procedures
Before You Begin . . . 6-2
Types of Adjustments . . . 6-6
Adjustment 01. Video Processor . . . 6-8
Adjustment 02. 100 MHz Reference/300 MHz Bandpass Filter . . . 6-11
Adjustment 03. 300 MHz Bandpass Filter . . . 6-15
Adjustment 04. Calibrator Output Frequency . . . 6-18
Adjustment 05. Calibrator Output Amplitude . . . 6-19
Adjustment 06. 300 MHz Reference Output Amplitude . . . 6-20
Adjustment 07. FFS VCO . . . 6-22
Adjustment 08. FFS Tune/Comp Coarse . . . 6-24
Adjustment 09. FFS Reference Null . . . 6-26
Adjustment 10. FFS API 1 . . . 6-28
Adjustment 11. FFS API 2 . . . 6-30
Adjustment 12. FFS API 3 . . . 6-31
Adjustment 13. FFS Tune/Comp Fine . . . 6-32
Adjustment 14. FFS Spurious Responses . . . 6-34
Adjustment 15. Low Idler . . . 6-36
Adjustment 16. Sweep Offset . . . 6-38
Adjustment 17. Frequency Control Voltage References . . . 6-40
Adjustment 18. YTO Frequency Endpoints . . . 6-42
Adjustment 19. FM Gain . . . 6-45
Adjustment 20. Sweep Overshoot . . . 6-47
Adjustment 21. Tune + Span Offset . . . 6-49

Adjustment 22. Idler Buffer 6-51

7. Module Verification Tests

Verification Tests 7-2
Recommended Test Equipment 7-3
Test 01. 300 MHz Reference Output Power and Harmonics 7-4
Test 02. LO Output Power and Harmonics 7-5
Test 03. Residual FM (Span >10 MHz) 7-6
Test 04. LO Output Spurious Response 7-7
Test 05. LO Display Sidebands 7-9
Test 06. LO 40 kHz Sidebands 7-11
Test 07. Reference Oscillator Accuracy 7-13
Test 08. Calibrator Amplitude Accuracy 7-15
Test 09. 300 MHz Reference Amplitude Accuracy 7-16
Test 10. Video Detector Tracking 7-17
Test 11. External Triggering 7-18
Test 12. Video Processor Noise 7-19
Test 13. LO Frequency and Span Accuracy (Span >10 MHz) 7-20
Test 14. LO Span Accuracy (Phase-Locked Spans) 7-21
Test 15. LO Frequency Accuracy (Span ≤10 MHz) 7-22
Test 16. LO Frequency Error versus Sweep Time 7-23
Test 17. Tune + Span Output Accuracy 7-24
Test 18. SWP Output Accuracy 7-25
Test 19. HSWP Output Voltage 7-26
Test 20. Line Triggering 7-27
Test 21. LED Check 7-29
Test 22. Video Bandwidth 7-30
Test 23. 300 MHz Reference 40 kHz Sidebands 7-31
Test 24. Calibrator Harmonics 7-33
Test 25. Calibrator Output Impedance 7-34
Test 26. 300 MHz Reference Isolation 7-36
Test 27. External Reference 7-38
Test 28. Reference Oscillator Noise and Stability 7-40
Test 29. YTO Linearity 7-41

8. System Calibration

External Frequency Reference 8-2
Spectrum Analyzer/RF Cable Calibration 8-6

9. Replacing Major Assemblies

A1A1 Host/Processor 9-3
A1A2 1/4 MB RAM/ROM 9-5
A2 Video Processor 9-6
A3 Power Supply 9-7
A4 Idler Phase-Lock Loop 9-9
A4A1 300 MHz Amplifier 9-11
A4A2 Idler Lock 9-13
A6 YTO Phase-Lock Loop 9-15
A6A1 100 MHz Reference 9-18
A6A2 YTO Lock 9-20
A6A3 Idler Buffer 9-22
A6A4 YTO Lock Microcircuit 9-23
A6A5 YTO 9-25
A7 FRAC'N Synthesizer for Serial #3219A01388 and Above 9-27
A7 FRAC'N Synthesizer for Serial #3144A01387 and Below 9-31

A8 Frequency Control 9-37
A9 Front Panel 9-38

10. Overall Parts Identification Drawings
Front View Identification 10-2
Rear View Identification 10-4
Top View Identification 10-6
Bottom View Identification 10-15
Side View Identification 10-16
Side View Identification (A4 Idler Phase-Lock Loop) 10-18
Side View Identification (A6 YTO Phase-Lock Loop) 10-19
Side View Identification (A7 FRAC'N Synthesizer) 10-21

Index

Figures

1-1. Typical Serial Number Label 1-3
2-1. Main Menu Softkeys 2-19
2-2. Mass Storage Menu and Parameter Menu Softkeys 2-20
2-3. Equipment Menu and HP-MSIB Map Screen Menu Softkeys 2-21
2-4. Test Menu Softkeys 2-22
3-1. Line Voltage Selector 3-2
3-2. Line Fuse Removal and Replacement 3-2
4-1. Static-Safe Work Station 4-2
4-2. Troubleshooting Flow Chart 4-4
4-3. Block Diagram of A7 FRAC'N Synthesizer for Serial #3144A01387 and Below . 4-59
4-4. Overall Block Diagram of Local Oscillator Source 4-61
5-1. 300 MHz Up-Converter Block Diagram 5-4
5-2. 300 MHz Up-Converter Assembly Diagram 5-6
5-3. Power Levels through RF Chain 5-7
5-4. Sniffer Loop Assembly Diagram 5-9
5-5. Resistive Divider Schematic Diagram 5-10
5-6. Resistive Divider Assembly Diagram 5-10
6-1. Equipment Setup for Adjustment 01. Video Processor 6-8
6-2. Locations for Adjustment 01. Video Processor 6-9
6-3. Equipment Setup for Adjustment 02. 100 MHz Reference/300 MHz Bandpass Filter 6-11
6-4. Locations for Adjustment 02. 100 MHz Reference/300 MHz Bandpass Filter . . 6-11
6-5. Placing A1A1 Host/Processor and A3 Power Supply on Extender Cables 6-12
6-6. Equipment Setup for Adjustment 03. 300 MHz Bandpass Filter 6-15
6-7. Locations for Adjustment 03. 300 MHz Bandpass Filter 6-15
6-8. Placing A1A1 Host/Processor and A2 Video Processor on Extender Cables . . . 6-16
6-9. Equipment Setup for Adjustment 04. Calibrator Output Frequency 6-18
6-10. Equipment Setup for Adjustment 05. Calibrator Output Amplitude 6-19
6-11. Equipment Setup for Adjustment 06. 300 MHz Reference Output Amplitude . 6-20
6-12. Locations for Adjustment 06. 300 MHz Reference Output Amplitude 6-20
6-13. Equipment Setup for Adjustment 07. FFS VCO 6-22
6-14. Locations for Adjustment 07. FFS VCO 6-22
6-15. Equipment Setup for Adjustment 08. FFS Tune/Comp Coarse 6-24
6-16. Locations for Adjustment 08. FFS Tune/Comp Coarse 6-24
6-17. Equipment Setup for Adjustment 09. FFS Reference Null 6-26
6-18. Locations for Adjustment 09. FFS Reference Null 6-26
6-19. Equipment Setup for Adjustment 10. FFS API 1 6-28
6-20. Locations for Adjustment 10. FFS API 1 (1 of 2) 6-28
6-21. Locations for Adjustment 10. FFS API 1 (2 of 2) 6-29
6-22. Equipment Setup for Adjustment 13. FFS Tune/Comp Fine 6-32
6-23. Equipment Setup for Adjustment 14. FFS Spurious Responses 6-34
6-24. Equipment Setup for Adjustment 15. Low Idler 6-36
6-25. Locations for Adjustment 15. Low Idler 6-36
6-26. Equipment Setup for Adjustment 16. Sweep Offset 6-38
6-27. Locations for Adjustment 16. Sweep Offset 6-38
6-28. Equipment Setup for Adjustment 17. Frequency Control Voltage References . 6-40

6-29. Locations for Adjustment 17. Frequency Control Voltage References 6-40
6-30. Equipment Setup for Adjustment 18. YTO Frequency Endpoints 6-42
6-31. Locations for Adjustment 18. YTO Frequency Endpoints (1 of 2) 6-42
6-32. Locations for Adjustment 18. YTO Frequency Endpoints (2 of 2) 6-43
6-33. Equipment Setup for Adjustment 19. FM Gain 6-45
6-34. Locations for Adjustment 19. FM Gain 6-45
6-35. Equipment Setup for Adjustment 20. Sweep Overshoot 6-47
6-36. Locations for Adjustment 20. Sweep Overshoot 6-47
6-37. Equipment Setup for Adjustment 21. Tune + Span Offset 6-49
6-38. Locations for Adjustment 21. Tune + Span Offset 6-49
6-39. Equipment Setup for Adjustment 22. Idler Buffer 6-51
6-40. Locations for Adjustment 22. Idler Buffer 6-52
7-1. System Rear-Panel Connections 7-3
7-2. 300 MHz Reference Output Power and Harmonics Test Setup 7-4
7-3. LO Output Power and Harmonics Test Setup 7-5
7-4. Residual FM (Span >10 MHz) Test Setup 7-6
7-5. LO Output Spurious Response Test Setup 7-7
7-6. LO Display Sidebands Test Setup 7-9
7-7. LO 40 kHz Sidebands Test Setup 7-11
7-8. Reference Oscillator Accuracy Test Setup 7-13
7-9. Calibrator Amplitude Accuracy Test Setup 7-15
7-10. 300 MHz Reference Amplitude Accuracy Test Setup 7-16
7-11. Video Detector Tracking Test Setup 7-17
7-12. External Triggering Test Setup 7-18
7-13. Test Setup for Test 12. Video Processor Noise 7-19
7-14. LO Frequency and Span Accuracy (Span >10 MHz) Test Setup 7-20
7-15. LO Span Accuracy (Phase-Locked Spans) Test Setup 7-21
7-16. LO Frequency Accuracy (Span ≤10 MHz) Test Setup 7-22
7-17. LO Frequency Error versus Sweep Time Test Setup 7-23
7-18. Tune + Span Output Accuracy Test Setup 7-24
7-19. SWP Output Accuracy Test Setup 7-25
7-20. HSWP Output Voltage Test Setup 7-26
7-21. Line Triggering Test Setup 7-27
7-22. Test Setup for Test 21. LED Check 7-29
7-23. Video Bandwidth Test Setup 7-30
7-24. 300 MHz Reference 40 kHz Sidebands Test Setup 7-31
7-25. Calibrator Harmonics Test Setup 7-33
7-26. Calibrator Output Impedance Test Setup 7-34
7-27. 300 MHz Reference Isolation Test Setup 7-36
7-28. External Reference Test Setup 7-38
7-29. Reference Oscillator Noise and Stability Test Setup 7-40
7-30. Test Setup for Test 29. YTO Linearity 7-41
8-1. Preferred Frequency Reference Connections 8-3
8-2. Using an HP 70310A Precision Frequency Reference 8-4
8-3. Using an HP 70310A Precision Frequency Reference and a House Standard . . 8-4
8-4. Using an HP 8566B Spectrum Analyzer and a House Standard 8-5
8-5. Reference Calibration Test Setup 8-6
8-6. IF Calibration Test Setup 8-6
8-7. RF Calibration Test Setup 8-7
9-1. A1A1 Host/Processor Removal/Replacement 9-4
9-2. A2 Video Processor Removal/Replacement 9-6
9-3. A3 Power Supply Removal/Replacement 9-8
9-4. A4 Idler Phase-Lock Loop Removal/Replacement 9-10
9-5. A4A1 300 MHz Amplifier Removal/Replacement 9-12
9-6. A4A2 Idler Lock and A4A3 Idler VCO Microcircuit Removal/Replacement . . . 9-14

9-7. A6 YTO Phase-Lock Loop Removal/Replacement (1 of 2) 9-16
9-7. A6 YTO Phase-Lock Loop Removal/Replacement (2 of 2) 9-17
9-8. A6A1 100 MHz Reference Removal/Replacement 9-19
9-9. A6A2 YTO Lock Removal/Replacement 9-21
9-10. A6A3 Idler Buffer Removal/Replacement 9-22
9-11. A6A4 YTO Lock Microcircuit Removal/Replacement 9-24
9-12. A6A5 YTO Removal/Replacement 9-26
9-13. A7 FRAC'N Synthesizer Removal/Replacement for Serial #3219A01388 and Above 9-28
9-14. A7A1 FFS Phase Lock Loop Removal/Replacement for Serial #3219A01388 and Above 9-30
9-15. A7 FRAC'N Synthesizer Removal/Replacement for Serial #3144A01387 and Below 9-32
9-16. A7A1 FFS Phase Lock Loop Removal/Replacement for Serial #3144A01387 and Below 9-34
9-17. A7A2 FFS Analog Removal/Replacement for Serial #3144A01387 and Below . . 9-36
9-18. A8 Frequency Control Removal/Replacement 9-37
9-19. A9 Front Panel Removal/Replacement 9-38
10-1. Overall Parts Identification Drawing, Front View (A9 Front Panel) 10-2
10-2. Overall Parts Identification Drawing, Front View 10-3
10-3. Overall Parts Identification Drawing, Front View (Panel Removed) 10-3
10-4. Overall Parts Identification Drawing, Rear View (Rear-Frame) 10-4
10-5. Overall Parts Identification Drawing, Rear Panel Connectors 10-5
10-6. Overall Parts Identification Drawing, Top View 10-6
10-7. Overall Parts Identification Drawing, Top View (Assembly Locations) 10-8
10-8. Overall Parts Identification Drawing, Top View (Cable Locations) 10-10
10-9. Overall Parts Identification Drawing, Top View (Connector Locations) 10-14
10-10. Overall Parts Identification Drawing, Bottom View 10-15
10-11. Overall Parts Identification Drawing, Side View 10-16
10-12. Overall Parts Identification Drawing, Left-Side View 10-17
10-13. Overall Parts Identification Drawing, Side View (A4 Idler Phase-Lock Loop) . . 10-18
10-7. Overall Parts Identification Drawing, Side View (A6 YTO Phase-Lock Loop) . . 10-20
10-8. Overall Parts Identification Drawing, Side View (A7 FRAC'N Synthesizer) . . . 10-21

Tables

1-1. Hewlett-Packard Sales and Service Offices 1-4
1-2. Packaging for a 2/8 Module 1-6
3-1. Default HP-MSIB Address Map 3-3
4-1. Static-Safe ESD Accessories 4-3
4-2. A3 Power Supply Measurements 4-24
4-3. Measurements at A6A1 100 MHz Reference (J6) and (J7) Pin 4 4-37
4-4. State Worksheet 4-57
5-1. Recommended Test Equipment 5-1
5-2. Components for the 300 MHz Up-Converter 5-5
5-3. 300 MHz Up-Converter Parts List 5-6
5-4. Sniffer Loop Assembly Parts List 5-9
5-5. Resistive Divider Parts 5-11
6-1. Adjustable Components 6-4
6-2. Equipment Required for Adjustments 6-5
9-1. Required Tools 9-2

1

Getting Started

This chapter provides information to help get you started so that your local oscillator source is serviced properly.

This chapter answers the questions “What Is Servicing?” and “When Is Servicing Needed?”. It then describes the procedures used to return your local oscillator source to Hewlett-Packard for servicing.

What Is Servicing?

Servicing includes testing, adjusting, calibrating, troubleshooting, and repairing.

There are different categories of testing available. These categories are module verification tests, system verification of operation tests, and system performance tests.

Module Verification Tests	Module verification tests are used to test modules so that when assembled into a system, the system meets the system's specifications. These sets of tests are used during servicing.
System Verification of Operation Tests	System verification of operation tests are used to verify the proper operation of an instrument and to verify that the instrument meets approximately 80% of its measurement related specifications. These sets of tests are subsets of system performance tests.
System Performance Tests	System performance tests are used to verify the proper operation of a complete modular measurement system (MMS) to full system specifications.

This service guide provides information related to testing, adjusting, calibrating, troubleshooting, and repairing your local oscillator source; it also provides information on module verification tests. These sets of tests are used during servicing.

For information related to system verification of operation tests, refer to the *HP 70000 Modular Spectrum Analyzer Installation and Verification Manual*, and for information related to system performance tests, refer to the documentation for HP 11990A system performance test software.

When Is Servicing Needed?

Servicing is needed:

- if error messages are displayed on your HP 70000 Series display
- if an ERROR LED or FAULT LED is on
- to perform repairs or adjustments or both
- to verify the correct operation of your local oscillator source
- or, if applicable, when upgrading firmware

If you determine that your local oscillator source needs servicing, you can perform the servicing yourself using the information in this manual or, you can return your local oscillator source to a Hewlett-Packard service center.

If You Want Hewlett-Packard to Service Your Local Oscillator Source

Before calling Hewlett-Packard or returning your local oscillator source for service, please read your warranty information. Warranty information is printed at the front of this service guide.

In any correspondence or telephone conversations, refer to the local oscillator source by its full model number and full serial number. With this information, the Hewlett-Packard representative can determine whether your unit is still within its warranty period.

Determining Your Local Oscillator Source's Serial Number

When a module is manufactured by Hewlett-Packard, it is given a unique serial number. This serial number is attached to a label on the front frame or front panel of the module. A serial number label is in two parts. (Refer to Figure 1-1.) The first part makes up the serial number prefix and consists of four digits and a letter. The second part makes up the serial number suffix and consists of the last five digits on the serial number label. The serial number prefix is the same for all identical modules; it only changes when a change in the electrical or physical functionality is made. The serial number suffix, however, changes sequentially and is different for each module.

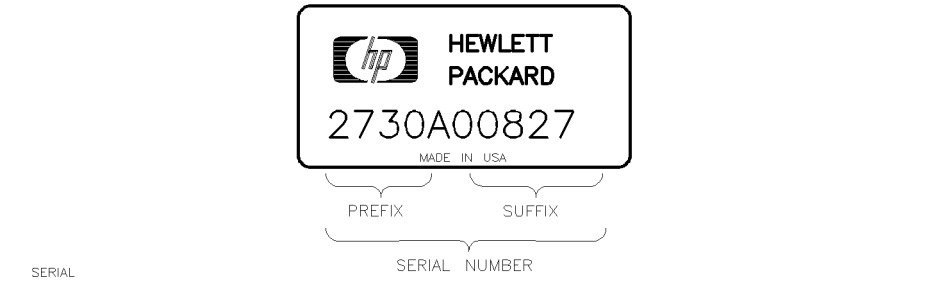

Figure 1-1. Typical Serial Number Label

Table 1-1. Hewlett-Packard Sales and Service Offices

US FIELD OPERATIONS HEADQUARTERS
Hewlett-Packard Company
19320 Pruneridge Avenue
Cupertino, CA 95014, USA
(800) 752-0900

California
Hewlett-Packard Co.
1421 South Manhattan Ave.
Fullerton, CA 92631
(714) 999-6700

Hewlett-Packard Co.
301 E. Evelyn
Mountain View, CA 94041
(415) 694-2000

Colorado
Hewlett-Packard Co.
24 Inverness Place, East
Englewood, CO 80112
(303) 649-5000

Georgia
Hewlett-Packard Co.
2000 South Park Place
Atlanta, GA 30339
(404) 955-1500

Illinois
Hewlett-Packard Co.
5201 Tollview Drive
Rolling Meadows, IL 60008
(708) 342-2000

New Jersey
Hewlett-Packard Co.
150 Green Pond Road
Rockaway, NJ 07866
(201) 586-5400

Texas
Hewlett-Packard Co.
930 E. Campbell Rd.
Richardson, TX 75081
(214) 231-6101

EUROPEAN OPERATIONS HEADQUARTERS
Hewlett-Packard S.A.
150, Route du Nant-d'Avril
1217 Meyrin 2/Geneva
Switzerland
(41 22) 780.8111

France
Hewlett-Packard France
1 Avenue Du Canada
Zone D'Activite De Courtaboeuf
F-91947 Les Ulis Cedex
France
(33 1) 69 82 60 60

Germany
Hewlett-Packard GmbH
Hewlett-Packard-Strasse
61352 Bad Homburg
Germany
(+49 6172) 16-0

Great Britain
Hewlett-Packard Ltd.
Eskdale Road, Winnersh Triangle
Wokingham, Berkshire RG11 5DZ
England
(44 734) 696622

INTERCON OPERATIONS HEADQUARTERS
Hewlett-Packard Company
3495 Deer Creek Rd.
Palo Alto, California 94304-1316
(415) 857-5027

Australia
Hewlett-Packard Australia Ltd.
31-41 Joseph Street (P.O. Box 221)
Blackburn, Victoria 3130
(61 3) 895-2895

Canada
Hewlett-Packard (Canada) Ltd.
17500 South Service Road
Trans-Canada Highway
Kirkland, Quebec H9J 2X8
Canada
(514) 697-4232

Japan
Yokogawa-Hewlett-Packard Ltd.
1-27-15 Yabe, Sagamihara
Kanagawa 229, Japan
(81 427) 59-1311

China
China Hewlett-Packard, Co.
38 Bei San Huan X1 Road
Shuang Yu Shu
Hai Dian District
Beijing, China
(86 1) 256-6888

Singapore
Hewlett-Packard Singapore
Pte. Ltd.
Alexandra P.O. Box 87
Singapore 9115
(65) 271-9444

Taiwan
Hewlett-Packard Taiwan
8th Floor, H-P Building
337 Fu Hsing North Road
Taipei, Taiwan
(886 2) 712-0404

Returning Your Local Oscillator Source for Service

Hewlett-Packard has sales and service offices around the world to provide complete support for your local oscillator source. To obtain servicing information or to order replacement parts, contact the nearest Hewlett-Packard sales and service office listed in Table 1-1.

Use the following procedure to return your local oscillator source to Hewlett-Packard for service:

1. Fill out a service tag (available at the end of this service guide) and attach it to the instrument. Please be as specific as possible about the nature of the problem. Send a copy of any or all of the following information:

   - any error messages that appeared on the HP 70000 Series display
   - a completed Performance Test record
   - any other specific data on the performance of the local oscillator source

---

CAUTION Damage can result if the original packaging materials are not used. Packaging materials should be anti-static and should cushion the local oscillator source on all sides.

Never use styrene pellets in any shape as packaging materials. They do not adequately cushion the instrument or prevent it from moving in the shipping container. Styrene pellets can also cause equipment damage by generating static electricity or by lodging in fan motors.

---

2. Place the local oscillator source in its original packaging materials.

   If the original packaging materials are not available, you can contact a Hewlett-Packard sales and service office to obtain information on packaging materials or you may use an alternative packing material referred to as "bubble-pack". One of the companies that makes bubble-pack is Sealed Air Corporation of Hayward, California, 94545.

3. Surround the local oscillator source with at least 3 to 4 inches of its original packing material or bubble-pack to prevent the local oscillator source from moving in its shipping container.

4. Place the local oscillator source, after wrapping it with packing material, in its original shipping container or a strong shipping container that is made of double-walled corrugated cardboard with 159 kg (350 lb) bursting strength.

   The shipping container must be both large enough and strong enough to accommodate your local oscillator source and allow at least 3 to 4 inches on all sides for packing material.

5. Seal the shipping container securely with strong nylon adhesive tape.

6. Mark the shipping container "FRAGILE, HANDLE WITH CARE" to help ensure careful handling.

7. Retain copies of all shipping papers.

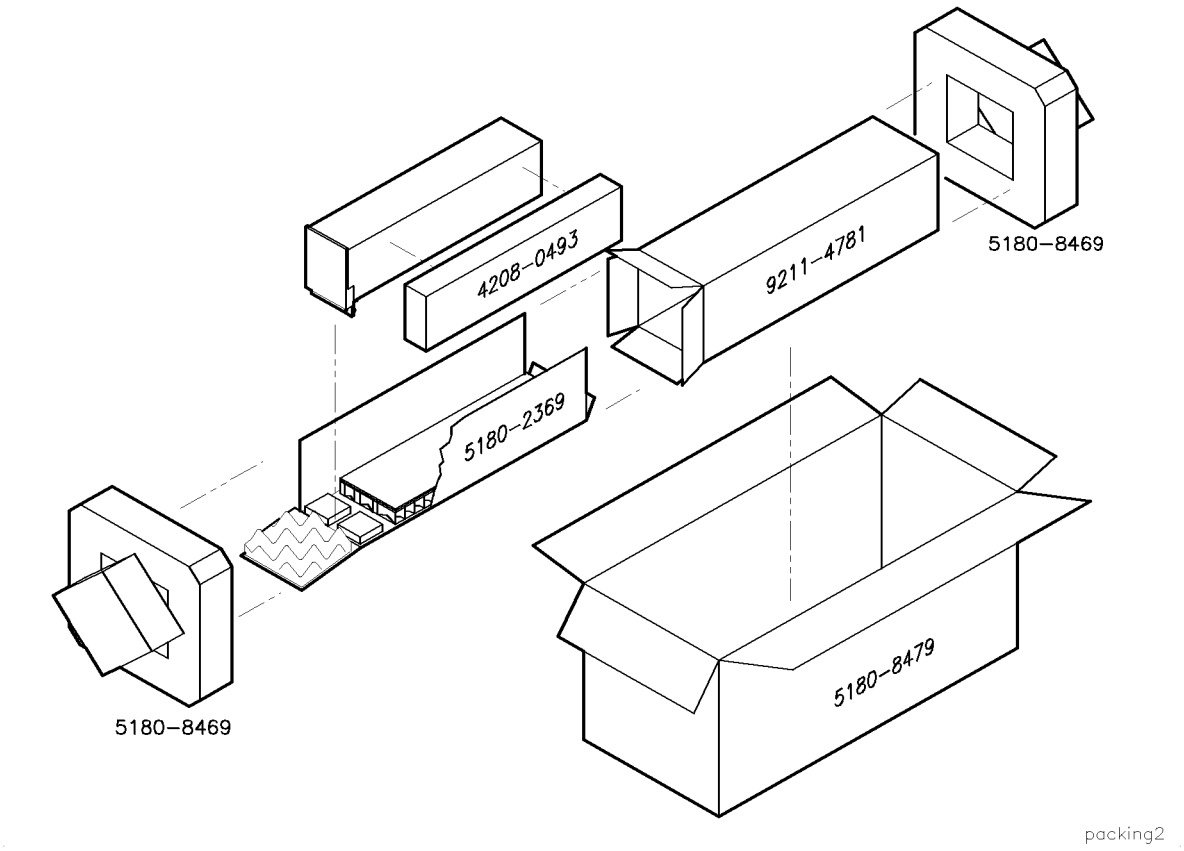

Table 1-2. Packaging for a 2/8 Module

Item	Description	HP Part Number	Qty
1	Carton-outer	5180-8479	1
2	Carton-inner	9211-4781	1
3	Carton-sliders	5180-2369	1
4	Foam inserts	4208-0493	1
5	Foam pads	5180-8469	2

2

Module Verification Software

Module Verification Software is a program that is designed to automate module verification tests and adjustment procedures. Included in this chapter is a step-by-step procedure to load the software and get the verification tests or adjustment procedures underway. For more detailed information, refer to the sections regarding individual menus.

This documentation supports Module Verification Software, Revision A.02.00 or greater. Use this software with slave modules that have an HP 70900A/B local oscillator source as a master. This software is controlled by a softkey-driven menu and user-interface screens. The disks included with this module provide programs that test whether the module meets its characteristics for system operation.

The *HP 70000 Modular Spectrum Analyzer Installation and Verification Manual* contains configuration information for predefined models of HP 70000 Series modular spectrum analyzer systems. The software automatically reads your system configuration data from the Hewlett-Packard Modular System Interface Bus (HP-MSIB) to determine which system or modules you are using.

Computer Compatibility

Module Verification Software is written in HP BASIC 4.0 and can run on the following HP 9000 Series 200/300 controllers. Minimum RAM requirement is 2.5 megabytes.

HP 9816	HP 9920 (with HP 35721A monitor)
HP 9836	HP 9000 Series 300 controller

When using an HP 9000 Series 300 controller, a medium-resolution monitor and either an HP 98203C or an HP 46020A keyboard are required. A high-resolution monitor will preclude printing graphical test results. Due to the various keyboards supported, some minor text differences appear in the menus and softkeys displayed on-screen. (Refer to "Alternate Key Labels" for an explanation of keyboard differences.)

Alternate Key Labels

For simplicity in this document, we assume that you are using an HP 9000 Series 200 controller keyboard. Refer to the list below if your keyboard key labels do not match the ones used in text.

Keyboard Key Labels	**Alternate Key Labels**
(EXECUTE)	(RETURN)
(ENTER)	(RETURN)
(RUN)	press (SYSTEM), then RUN
(CONTINUE)	press (SYSTEM), then CONTINUE

Computer Language Compatibility

Module Verification Software runs on HP BASIC 4.0, or later, with the BIN files in RAM that are listed below. A procedure for loading HP BASIC is provided in "Installing Module Verification Software".

CLOCK	ERR	HPIB	MAT
CS80*	GRAPH	IO	MS
DISK†	GRAPHX	KBD	PDEV‡

*Optional – supports Winchester disk drives.
†Optional – supports microfloppies and older Winchester disk drives.
‡Optional – provides debugging features for program development.

In a shared resource management (SRM) environment, the following BIN files are also required:

DCOMM
SRM

Note If you have set up some RAM memory for specific usage, be aware that this program uses RAM memory Volume ":MEMORY, 0, 15". Move any information stored at this Volume to another location before running Module Verification Software.

Printer Compatibility

Module Verification Software supports any HP-IB printer; however, many of the printed test results require a graphics printer. Graphical test results are not output to a non-graphics printer.

Configuring the Hardware

1. Connect the HP 70000 Series modular spectrum analyzer system to the computer port determined by the following criteria:
   - For computers with an HP 98624A HP-IB interface, connect your spectrum analyzer to the port labeled HP-IB SELECT CODE 8. Check that the address switch on the HP 98624A HP-IB interface board assembly matches the HP-IB controller device address. If needed, refer to the *HP 9000 Series 200/300 controller Peripheral Installation Guide, Volume 1*.
   - For computers without an HP 98624A HP-IB interface, connect the HP 70000 Series modular spectrum analyzer system to the port labeled HP-IB SELECT CODE 7.
2. Connect the HP-IB cables from the test equipment to the computer's HP-IB SELECT CODE 7 port.
3. Use a 0.5 meter HP-IB cable (HP 10833D BNC 0.5 meter HP-IB cable, or similar cable) to connect the external disk drive's HP-IB to the HP-IB SELECT CODE 7 port.

Note Occasionally disk drives exhibit unpredictable behavior when sharing the HP-IB with instruments. If you find this occurring, connect the disk drive to a separate HP-IB interface.

4. Set the external test equipment and the HP 70000 Series modular spectrum analyzer system line switches to ON. Allow the equipment to warm up as specified for the verification tests or adjustment procedures.
5. Turn the disk drive (if used) and computer ON.

Installing Module Verification Software

Use the following steps to get the program loaded and running. Later sections of this chapter contain more specific program-operation information.

Two assumptions are made with the Module Verification Software. One is that you are using standard HP-IB addresses for the active devices of the microwave test station. The second is that all passive devices for the microwave test station are available. If either of these assumptions is inaccurate, you are prompted for data during program execution.

1. View the version number of the software program after loading the first program disk.

   Look in the right-hand side of the initial display. Specific numbers vary, but the version number looks like this: `Rev. A.02.00`

2. Locate the program part number printed on the disk labels.
3. Load HP BASIC 4.0 or later, with the appropriate binaries, into an HP 9000 Series 200/300 controller. If necessary, refer to an HP BASIC reference manual.

CAUTION Make backup copies of all write-protected disks. If the program data on an individual disk should become altered, it cannot be ordered separately. The entire set of disks must be ordered to replace any single disk.

4. Assign the MSI (mass storage is) to the drive you will use as the default drive. As an example, assigning the MSI to a disk drive looks like this: `MSI ":,700,0"`
5. Insert Executive Disk 1 into the assigned default drive. Type the following command line: `LOAD "MOD_VERF",1`
6. Press (EXECUTE). The software version number appears in the screen that is next displayed.
7. Follow the on-screen prompts and load Executive Disk 2. Press (CONTINUE). Loading Executive Disk 2 may require up to two minutes.

Note Be sure the Executive Disk 3 you load is the disk that belongs with the module you wish to test.

8. Replace Executive Disk 2 with Executive Disk 3, then press `PROCEED`. If the date and time prompt appears, enter the date and time in the specified format. (This message appears only if date and time are not current.)
9. If you are using your module's software for the first time, a message appears stating that mass storage data is needed. Press `PROCEED` and follow the on-screen prompts to create a mass storage data file. Once mass storage data is stored, this message will not reappear.
10. An error message may be displayed at this point. If the DUT (device under test) does not match the module listed in the HP-MSIB Address Map, or if the software you are using belongs to another module of your system, refer to "Error Messages" at the end of this chapter to determine a course of action.
11. Load the Operating Disk as directed. The Operating Disk probably needs to remain in the drive specified as the MSI default drive. Load the Driver Disks into the drive specified on-screen.
12. Load all Driver Disks. Insert each Driver Disk and press `PROCEED`. This process may require up to six minutes.
13. If you have not entered serial numbers for passive devices that require calibration data for test purposes, on-screen prompts request the data now. Enter the data via the Calibration

Data screen. Press `CREATE` to access this screen. For a detailed explanation of entering calibration data, refer to "Edit Calibration Data" under "Menus" in this chapter. Enter the serial number for each device specified, or bypass the device to continue if it is not used now. After entering and storing data for passive devices, this prompt screen will not reappear.

Note In the future, you can access calibration data stored on Operating Disks, rather than enter the data for passive devices of a given serial number each time you begin testing. The program displays any additional passive devices requiring serial numbers and calibration data. Serial numbers are only required for passive devices that need their calibration data stored on the Operating Disk. You are prompted to enter serial numbers for these devices only.

---

14. You may perform any of the items listed below after satisfying the above conditions:

- Select `FINAL TEST` to perform procedures for which the required test equipment is present, automatically.
- Press `equipment menu` and return to the Equipment Menu. From here you can modify the status of the equipment in the menu (make it unavailable, readdress it, change the private bus, and so on). Refer to "Equipment Menu" under "Menus" in this chapter.
- Press `test menu` to choose between verification tests or adjustment procedures. If you have already entered either the verification test or adjustment menus, the screen allowing you to choose one or the other does not reappear. To retrieve the Test or Adjust selection screen, select `main menu` from the Test Menu softkeys. In the Main Menu, press `RESTART`. Be aware that pressing `RESTART` purges status information for any tests you have already run. You determine individual tests or individual adjustments to perform via the menu you select.
- Press `MAIN MENU` to customize your test process via any other menu.

Module Verification Software Overview

Testing Multiple Modules

Module Verification Software tests only one module at a time. If you have more than one module to test in your system, test them separately. If you have tested a module and want to change the module being tested without turning off the controller, follow the steps below.

1. Get to the Main Menu, then press `equipment menu`.
2. In the Equipment Menu edit screen, move the item indicator to the Device Model number column next to the Module Under Test.
3. Press `SELECT`, modify the model number, and press (ENTER).
4. Press `DONE`, then `main menu`.
5. From the Main Menu, press `test menu`. If `ERROR MESSAGE: Selected instrument under test is ____; but the software supports the ____ module` appears, press either `RELOAD` and follow the on-screen prompts to load test software, or `CHANGE DUT` to gain access to the Equipment Menu or HP-MSIB Address Menu. From the Equipment Menu, you can select the module under test's model number and modify it to the module number of the software now loaded. From the HP-MSIB Address Menu, select the module to test that matches the software you already have loaded. Otherwise, press `ABORT`.

Error Messages or Warnings Defined

There are three kinds of error messages or warnings generated by the program.

- One appears briefly at the bottom of the CRT display. The program then goes automatically to a menu that asks you for corrections or modifications.
- Another type of error message begins with `ERROR MESSAGE` and provides special softkeys. These errors are user-correctable and anticipated by the program. There is usually a `Possible Fix` message displayed to help you clear the problem.
- The final type begins with `ERROR` and provides no special softkeys. The message informs you of an unanticipated error. There is no suggested fix displayed. If you cannot recover from one of these errors, please contact your Hewlett-Packard Sales and Service Office.

Final Tests Defined

Tests defined as Final Tests are a subset of all available verification tests for a given module. After *any* module-level adjustment or repair, run Final Tests. Once a module has passed the Final Tests, install it into any mainframe and expect performance within its specified characteristics. Perform tests classified as Additional Tests after troubleshooting or adjustments to be sure of the proper operation of specific assemblies. The `FINAL TEST` softkey has no defined purpose while performing adjustments.

Single Tests Defined

You may select individual tests with this program. Refer to "Test Menu" under "Menus" in this chapter for a description of selecting individual tests. As explained in "Final Tests," specific assembly performance is checked by running assembly-associated performance tests.

Printing Test Results

The program shows whether each procedure passed or failed. You may configure the computer operations to format and print test results via the Parameter Menu. If an HP-IB printer is on the bus and an address is provided in the Equipment Menu, and you configured the Parameter Menu to print test results, the program automatically prints the test results. The printout includes a title and summary page.

The title page lists the following data:

- Module software used and the test date.
- Serial number of the module tested.
- Firmware version of the module tested.
- Power line frequency.
- Test person's identification.
- Test equipment model numbers and names, addresses, and ID or serial number.

The Summary Page lists total test time beside the titles of tests performed. The Summary Page also includes test results beneath one of the following categories:

- `Not all Final Tests have been completed ... and so forth`
- `The following Final Tests need to be completed:`
- `The following tests showed insufficient performance:`
- `The following tests met the appropriate requirements:`
- `The following additional tests were not completed:`

Menus

Menu Structure

The first menu presented allows you to go to the Main Menu, to begin Final Tests, or to return to the Equipment Menu. From the Main Menu, access any of the following menus:

Main Menu
Mass Storage Menu
Parameter Menu
Equipment Menu
Edit Calibration Data
HP-MSIB Address Menu
Test Menu

Except for the Test Menu, these menus are configuration menus through which you initialize the software for program operation. Via these menus, you enter information about disk drives, environment conditions, test equipment, the module under test, and so on. Refer to the information following the menu name in this chapter for details.

In the Test Menu, you select and execute module-related procedures. The Test Menu provides some testing options. Refer to "Test Menu" in this chapter for details.

The Mass Storage Menu, the Parameter Menu, and the Equipment Menu have two menu screens. One is the edit screen, the other is the command screen. (The previously mentioned menus use only the command screen.)

- In edit screens, you can edit displayed data or input data to the screen.
- In command screens, you may perform various menu-specific functions, which include storing edited data, selecting test mode, accessing the help screen, accessing the Main Menu, and so on.

Edit and Command Screen Menus

The following softkeys are present for menus that appear in Figure 2-1 through Figure 2-4. Not all of the menus have edit screens, but all have command screens. When softkey labels are written in lowercase letters, a sub-level softkey menu exists for that particular softkey. Softkey labels written in uppercase letters indicate that no further sub-level softkey menus exist for that softkey.

Edit Screen Menus

The following softkeys are present for edit menus that appear in Figure 2-1 through Figure 2-4.

`SELECT OR SELECT/TOGGLE`	either one of these keys appears in the Edit Menu. `SELECT` activates the column item where the cursor is located, while `SELECT/TOGGLE` activates predefined choices in the menu.
`DONE`	exits the edit screen, then displays the menu's command screen.

Command Screen Menus

The following softkeys are present for the command menus pictured in Figure 2-1 through Figure 2-4. An additional softkey, `edit cal data`, appears only in the Equipment Menu command screen. Refer to "Equipment Menu Command Screen" for information about this softkey.

`main menu` returns you to the "Main Menu." Refer to "Main Menu" in this chapter for details.

`EDIT` appears if there is an edit screen in the menu you are working in. Pressing this key returns you to the menu's edit screen.

`STORE` appears if you have data that needs to be stored on the OPERATING VOLUME. The HP-MSIB Address Menu does not require this softkey, therefore it does not appear in that command menu.

- `CREATE` appears if you tried to store data without an existing file available. `CREATE` activates the store function and creates a file on the OPERATING VOLUME.
- `REPEAT` appears if the correct Operating Disk containing calibration data is not in the disk drive. This key allows you to insert the Operating Disk into the disk drive and try again.
- `ABORT` displays the Main Menu screen. `ABORT` is available in various special task screens but never in a menu screen. In general, pressing this key a time or two will display the Main Menu, which has a `quit` softkey.

  If the Main Menu has not appeared for the first time, pressing `ABORT` produces a message asking you to press (RUN), which returns you to where you were when you pressed `ABORT`.

`HELP` accesses menu and softkey descriptions. Listed below are softkey selections and functions available via this softkey.

- `NEXT PAGE` takes you to the top of the next available menu page.
- `PREVIOUS PAGE` returns you to the top of the preceding menu page.
- `PRINT HELP` generates a printout of help-screen information.
- `DONE` returns you to the command or edit screen of the menu you were previously in.

`quit` displays the quit screen. This softkey is available only from menu command screens. After you press `quit`, you are asked if you really want to return to BASIC operating system. The following two softkey selections are available via the `quit` softkey.

- `YES` stops the program, retains any data files you stored before pressing `quit`, and returns you to BASIC operating system. (You can press (RUN) to restart the program and return to the Main Menu. The program retains all previously entered and stored data.)
- `NO` displays the edit screen of the previous menu, or the command screen if there is no edit screen.

Cursor Keys and Menu Selections

When a cursor is present, use either the cursor arrow-keys or the RPG (rotary pulse generator) knob to position the cursor at the column item you wish to edit.

Note In most cases, there are more selections available than are displayed on-screen. Be sure to move the cursor to the right and down as far as you can. `NEXT PAGE` and `PREVIOUS PAGE` keys are provided to speed your vertical searches.

Main Menu

From the Main Menu screen you can access all other menus. There is no edit screen for this menu. Figure 2-1 illustrates the Main Menu softkey organization.

Aside from the common softkeys, there are two special softkeys presented in the Main Menu. One is `FINAL TESTS`, which begins the final test sequence for a module. The second is the `RESTART` softkey. Press `RESTART` to reconfigure the program and retest a module, or to test a different module. Pressing this key affects the test status column of both the Test Menu edit screen and HP-MSIB address screen. The remaining Main Menu softkeys include `mass storage`, `parameter menu`, and `equipment menu`. Each of these menus is explained in detail in their sections of this chapter.

If you have stored calibration data on another HP 70000 Software Product Operating Disk, replace your current Operating Disk with that one and access the data. Be sure to return the Operating Disk belonging with your module under test to the default drive.

Mass Storage Menu

The BASIC operating system can use a number of mass storage devices. These include internal disk drives, external disk drives, and SRM systems. You are prompted to assign the areas where the program stores system and operation data. You do this by assigning Volume Labels to an **msus** (mass storage unit specifier). An msus is a string expression that points to a mass storage location. A mass storage Volume is composed of one or more files. Files are data items or subprograms. A Volume might consist entirely of files on a floppy disk, or some number of files on a small portion of a hard disk. The Mass Storage Menu lists Volume Labels that show the location of certain types of program information. These Volume Labels are explained below.

- DATA is where the test results are temporarily stored.
- ERROR LOG is where unanticipated errors are recorded for possible future use.
- OPERATING is where all the program data is stored.

The program retrieves specific information from the following Volume Labels:

- SYSTEM contains the Executive Disk 3 program code. There must be an msus assigned to this Volume Label.
- OPERATING contains the menu configuration files and calibration data.
- DRIVER DISK contains the driver instrument control program code. There must be an msus assigned to this Volume Label.
- TEST DISK contains the module performance tests programs.
- ADJUST DISK contains the module adjustment procedures.

Volume Labels each have a default msus. From the Mass Storage Menu, you can reassign the current msus or directory path designation to another designation. You cannot edit Volume Labels, but you may edit their msus designations and directory path data fields.

Mass Storage Menu Edit Screen

The Mass Storage Menu softkeys and their functions are described below.

SELECT	activates the column item where the cursor is located.
DONE	exits the edit screen, then displays the Mass Storage Menu command screen.

1. Use either the keyboard arrow keys or the RPG knob to position the cursor next to the column item you wish to edit. The annotations <=more and more=> indicate that you must scroll the screen left or right to view off-screen column items.
2. Press SELECT. Key in the new location (msus or Directory Path). Press ENTER when data entry for the selected item is complete.

Note Leave the Directory Path field blank unless you are using an SRM system, or HP BASIC 5.0 (or later version) that uses directory path hierarchy.

---

3. Repeat steps 1 and 2 until you have finished editing. Press DONE to display the Mass Storage Menu command screen.

The Data Volume is predefined to use RAM DISK ":MEMORY,0,0". If this RAM disk is not initialized to at least 1040 records, or contains additional files not required by module verification, BASIC error 64 may occur. Either reinitialize the RAM disk or use the Mass Storage Menu edit screen to select another medium.

Mass Storage Menu Command Screen

From the command screen, you can press STORE to save the edited data. Saving Mass Storage Menu data for the first time causes an error message prompting you to create a file. Do this simply by pressing CREATE.

Next, press main menu to return to the Main Menu screen, or press EDIT and return to the Mass Storage Menu edit screen.

Parameter Menu

You may determine some operating conditions of the software program in the Parameter Menu. You can select the printer and its output parameters, decide whether you want the program beep feature on or off, include a message on the test-results output, and so on. Use the SELECT/TOGGLE softkey to select the parameter item and enter data, or toggle to a predefined state. The parameter items and their appropriate selections are defined below.

Parameter Menu Edit Screen

Results sent to:	Your choices are Screen or Printer. Press SELECT/TOGGLE. When Screen is displayed, the test results appear on the CRT. When Printer is displayed, test results are displayed on-screen and printed out.
Output Format:	Your choices are Graph or Table. Press SELECT/TOGGLE. When Graph is displayed, test results are generated in a graph format if appropriate for the particular test results (a graphics printer is required if Printer and Graph are both selected). When Table is displayed, the test results are output in a table format.

Printer Lines:	Lines allowed are from 50 to 70. Press `SELECT/TOGGLE`. Enter a number from 50 to 70 to set the number of lines per printed page.
Line Frequency:	Valid frequency selections are 50 Hz, 60 Hz, and 400 Hz. Press `SELECT/TOGGLE` until the power line frequency for your system is displayed. The line frequency value affects some test results.
Beeper to be activated:	Your choices are Yes or No. Press `SELECT/TOGGLE`. When `Yes` is displayed, the warning and time-lapse reminder beeps are activated. When `No` is displayed, the program's beep feature is disabled.
Verify equipment on HP-IB:	Your choices are Yes or No. Press `SELECT/TOGGLE` to indicate your choice. `Yes` causes the program to verify the presence of each instrument on HP-IB at the address shown in the Equipment Menu. Select `No` to bypass this feature.
Test person's ID:	Press `SELECT/TOGGLE`, then enter your name or ID number to include it on the output report.
Number lines added:	Lets you include a printed message with the test results. Depending on the program, you can enter up to 30 lines, with no more than 30 characters per line. Enter the message you wish to have printed in this screen by selecting User Line.
User Line:	1. Position the cursor to the left-hand side of a User Line in the menu. Press `SELECT/TOGGLE`. 2. The prompt, `Enter additional information`, appears. Type in your message (up to 30 characters per line), then press (ENTER). 3. After you have entered your message, reposition the cursor at `Number lines added:`. Enter the number of user lines your message occupies, then press (ENTER).

Parameter Menu Command Screen

Press `DONE` when you are finished with the Parameter Menu edit screen. The next screen displayed is the command screen. Press `STORE` to save any edited Parameter Menu data, `EDIT` to return to the edit screen, or `main menu` to return to the Main Menu screen.

Saving Parameter Menu data for the first time causes an error message. The message prompts you to create a file. Do this simply by pressing `CREATE`.

Equipment Menu

The Equipment Menu edit screen displays a list of all the equipment required to test your DUT completely. Next to each DEVICE TYPE in the equipment list is a column labeled DEVICE MODEL for the model number, ADDRESS for the HP-IB address, SERIAL or ID NO. (for example, calibration lab number), and PRIVATE BUS for private bus designation (as for HP 8757C scalar network analyzers, and so on).

Chapter 4 contains a table of required test equipment. Using preferred models of test equipment assures the most complete verification and adjustment testing. Refer to Chapter 7 and Chapter 6 for individual test descriptions and test setups.

Equipment Menu Edit Screen

From the Equipment Menu edit screen you can enter data about your test equipment. You cannot edit the DEVICE TYPE column.

You may use either the cursor arrow keys or the RPG knob to position the cursor at the column item you wish to edit.

1. Edit a DEVICE MODEL item by locating the cursor beside the model number you wish to edit. Press `SELECT`, type the model number, then press (ENTER).

2. Edit an ADDRESS by locating the cursor beside the address you want to edit. Press `SELECT`, edit the address, then press (ENTER). If the DEVICE MODEL has no address in the ADDRESS column, `Missing ETE` is included in the Status column next to the tests that required the device. Tests tagged with `Missing ETE` are not performed.
   Valid active device addresses are restricted to the following ranges:

   - 700 to 730 and 800 to 830 for an HP 70000 Modular Spectrum Analyzer master module.
   - 700 to 730 for any other device type.

   These three-digit HP-IB address include the HP-IB select code and the actual HP-IB address. For example, an HP 70000 Series modular spectrum analyzer system HP-IB select code of 8 and an HP-IB address of 21 yields an address of 821. The addresses of DUTs that function as slaves should match their master device's address.

   Address passive devices (non-programmable devices such as sensors, directional bridges, and detectors) as either `Available` or `Not Available`. For some of the passive devices, entering `Available` in the address column requires entering calibration data and a serial number for the device. The calibration data for a passive device is stored on Operating Disks.

   Passive devices tagged `Not Available` in the address column cause `Missing ETE` to be printed next to the test names on the test results that are output for any procedure that required the missing device. Tests tagged with `Missing ETE` are not performed.

3. Edit a SERIAL NUMBER by locating the cursor beside the serial number. Press `SELECT`, enter the new serial number (10 digits or less), then press (ENTER). Some passive devices that have `Available` displayed in the address column must also have a serial-number entry.

4. Enter 19 in the PRIVATE BUS column if you are to use a Microwave or Full Microwave source with a network analyzer. Configure these instruments by connecting the source's HP-IB cable to the network analyzer's SYSTEM INTERFACE connection.

   a. Move the cursor through the DEVICE TYPE column until you reach the Full Microwave or Microwave source, then move horizontally to the PRIVATE BUS column.

   b. Enter `19` and press (ENTER). The program enters the ADDRESS column data for the selected source when 19 appears in the PRIVATE BUS column. Nineteen is the only allowable address for sources on a private bus. Refer to the network analyzer's manual for addressing information.

Equipment Menu Command Screen

After you have finished editing the Equipment Menu, press `DONE` to enter the Equipment Menu command screen. Press `STORE` to save the edited data.

Saving Equipment Menu data for the first time generates an error message prompting you to create a file. Do this simply by pressing `CREATE`.

This command screen displays the following additional softkeys:

`edit cal data` displays the Select Passive Device screen. From this screen, move the cursor to the passive device that needs its calibration data edited. Press `SELECT`, then enter the required data. Refer to "Edit Calibration Data" in this chapter for more information.

`NO ADDRESS` appears only if the program cannot find an instrument at a specified HP-IB address. To check which instruments are not responding, follow the steps below.

1. Access the Equipment Menu edit screen.
2. Scroll the ADDRESS column for flashing addresses, then be sure that the instrument is on.
3. `SELECT` the flashing address and either correct the address or press `NO ADDRESS` to delete all fault-addresses from the edit menu.

Note Either exiting the Equipment Menu or entering the Test Menu causes the program to search the addresses in the Equipment Menu for instruments assigned to HP-IB, if this feature is selected in the Parameter Menu.

---

4. Press `main menu` to return to the Main Menu, or `edit cal data` to enter calibration data for passive devices. Pressing `edit cal data` displays the Select Passive Device screen. Refer to the following section for more information.

Edit Calibration Data

The Select Passive Device screen displays all passive devices needing calibration data entered. Press `edit cal data` to enter the Select Passive Device screen. The program requires calibration data for some of the passive devices listed in the Equipment Menu edit screen.

Note Selecting a passive device needing a serial number generates a prompt requesting that you enter the number via the Equipment Menu. If you have formerly entered calibration data for a passive device of a given serial number and you would rather not reenter the data, replace your current Operating Disk with one containing data for passive devices from previous testing. Press `REPEAT` to access the calibration data from that disk. If you only need to enter the passive device's calibration data, press `CREATE` to enter the Edit Calibration Data screen, then begin at step 4.

---

1. Locate the cursor beside the device and press `SELECT`. The next screen displayed allows you to delete or edit data related to the passive device.

Note Not all frequencies are listed on the screen at once. Be sure to enter calibration data for frequencies listed on the next pages of the display.

---

2. If you edit the factory default FREQUENCY or CAL FACTORS values, enter valid calibration factors for each frequency edited.

Note For power sensors, you must enter a frequency and calibration factor for 10 MHz and 300 MHz, even if the device has no factor listed at 10 MHz or 300 MHz. Enter the values from the list of valid factors, below. Other frequencies outside the normal range of the device may also be required. Prior to using your device, you may need to calibrate it at these frequencies to ensure accurate measurement results.

Passive Device	**Calibration Factors**
Mixers	16 to 24 dB
Directional Couplers	8 to 11 dB
Noise Sources	12 to 16 dB
Sensors	0.3 to 1.6 (stored as a percentage by the program)

Edit Calibration Data Edit Screen

1. Move the cursor to a column item and press `SELECT`. Enter the new frequency or calibration factor, then press (ENTER). (It is not necessary to enter new frequency values in numeric order. The program sorts them before storing them on the Operating Disk.)
2. To delete an item, move the cursor to the column item. Press `SELECT`, clear the line, then move to another item. Repeat the above process as needed to edit frequency values or calibration data for any passive devices.

Edit Calibration Data Command Screen

1. After you have entered the necessary data, press `DONE`. The Equipment Menu command screen is displayed.
2. From the command screen, you can press `main menu` when you are ready to continue with the program.

HP-MSIB Address Menu

The HP-MSIB Address Menu lists the names and HP-MSIB addresses of the modules in the HP 70000 Series modular spectrum analyzer system that you may select to test. The HP-MSIB address of the master and the system are the same. In other words, the address of the master module determines the address of the system. For information on configuring the software to test a specific module, refer to "Equipment Menu" in this chapter.

There is no edit screen for this menu. The command screen has a `SELECT MODULE` softkey but requires no `STORE` softkey. Locate the cursor next to the module you wish to test. Press `SELECT MODULE`. Be sure the module selected here matches the `Module Under Test` listed in the Equipment Menu.

Test Menu

Pressing `test menu` from the Main Menu screen accesses the Test or Adjust selection screen. If `ERROR MESSAGE: The ____ is listed as the DUT in the Equipment Menu, but the ____ is selected in the HP-MSIB Address Menu` appears, the possible fix information suggests you select either `MODIFY MODULE` to enter new ROM data or `CHANGE DUT` to select the module you wish to test.

If you press `MODIFY MODULE`, on-screen commands help you change the model and serial number to the module you want to test. If you press `CHANGE DUT`, go either to the Equipment

Menu to change the model number or to the HP-MSIB Address Map to select the module number you want to test.

To begin the testing process, select TEST to run verification tests or ADJUST to perform adjustments procedures. Press main menu to return to the Main Menu.

If you have pressed FINAL TEST, and wish to get to the adjustment procedures, press main menu, RESTART, TEST MENU, then ADJUST. If you are in the adjustment procedures and want to get to the verification tests, press main menu, RESTART, TEST MENU, then TEST.

CAUTION Pressing either RESTART or equipment menu any time after testing begins purges Test Menu Status column information. Selecting a new module to test in the HP-MSIB Map Screen Menu also deletes the Status column data. The assumption is that verification-test status will most likely be modified if you are moving between modules, ETE model numbers, or to the adjustment procedures.

After selecting Tests, the names of the verification tests are displayed. Review the Status column for tests performed.

Additional test equipment is required to perform tests beside which Missing ETE is listed. To review which additional test equipment is required, locate the cursor beside the test name, then press SINGLE TEST. The Missing ETE screen displays the missing test equipment for that test.

A message stating that calibration data for passive devices is missing may also appear. If the correct Operating Disk is in the default drive, store the calibration data there. Press CREATE to build the data file. After the problem is cleared, the Test Menu is displayed.

Test Menu Command Screen

The Test Menu only has a command screen. It deviates from the command screen formats previously described. The following list defines the softkeys available in this menu.

FINAL TEST — begins a sequence of final tests, which are a subset of verification tests. A full calibration requires all verification tests. Review the Test Menu Test Name list for all available tests. During the final test sequence, the keys listed below are also available.

- END SEQUENCE — interrupts the test sequence at the end of the test in progress. The Test Menu is displayed with an additional softkey labeled RESUME TESTING. Press this key to resume the test sequence where the program left off.
- ABORT — ends the testing process and displays the Test Menu. From there you may choose some other action.

RESUME TESTING — allows you to continue the final test sequence after you have pressed FINAL TEST followed by END SEQUENCE.

SINGLE TEST — lets you select an individual test to run. If Missing ETE is listed in the Status column, you can review which test equipment is missing. Locate the cursor beside that test name, then press SINGLE TEST. The Missing ETE screen is displayed. If you choose to return to the Test Equipment Menu via the Test Menu to install the missing test equipment, you lose

the status of any tests that have run. To run a single test that has the necessary ETE, locate the cursor beside the test name and press SINGLE TEST.

multiple test softkey lets you organize a group of tests sequentially. Locate the cursor beside the test you want to run. Press SELECT to assign the first number of the series to that test. Continue to locate the cursor and press SELECT until you have organized the tests you want to run. Press END LIST when you are ready to begin testing. During testing, the following softkeys are also available.

- END SEQUENCE — interrupts the test sequence at the end of the test in progress, then displays the Test Menu.
- ABORT — ends the testing process and displays the Test Menu. From there you may choose some other action.

repeat mult. softkey allows you to select a test sequence (you determine the quantity and order). The tests loop through this sequence until you decide to stop them. Locate the cursor beside the test you want to run, press SELECT, move the cursor to the next test, press SELECT, and so on. Continue selecting tests until you are ready to begin testing. It is acceptable to select the same test for repeated testing. Press END LIST to start the test sequence. During testing, the following softkeys are also available.

- END SEQUENCE — interrupts the test sequence at the end of the test in progress, then displays the Test Menu. \ABORT\ ends the testing process and displays the Test Menu. From there you may choose some other action.

more keys toggles between SUMMARY, select output, and PURGE CAL DATA and the previously explained Test Menu command screen softkeys.

- SUMMARY — gives you a printout of the current tests run.
- select output — chooses an output device. You can print test results by pressing PRINTER, or you can print the current display by pressing SCREEN. Press RETURN to return to the previous set of softkeys in the Test Menu command screen.
- PURGE CAL DATA — Pressing this softkey deletes stored calibration data for the spectrum analyzer and any other calibration routines used for testing. Before module verification tests can be run again, equipment calibration routines have to be redone.

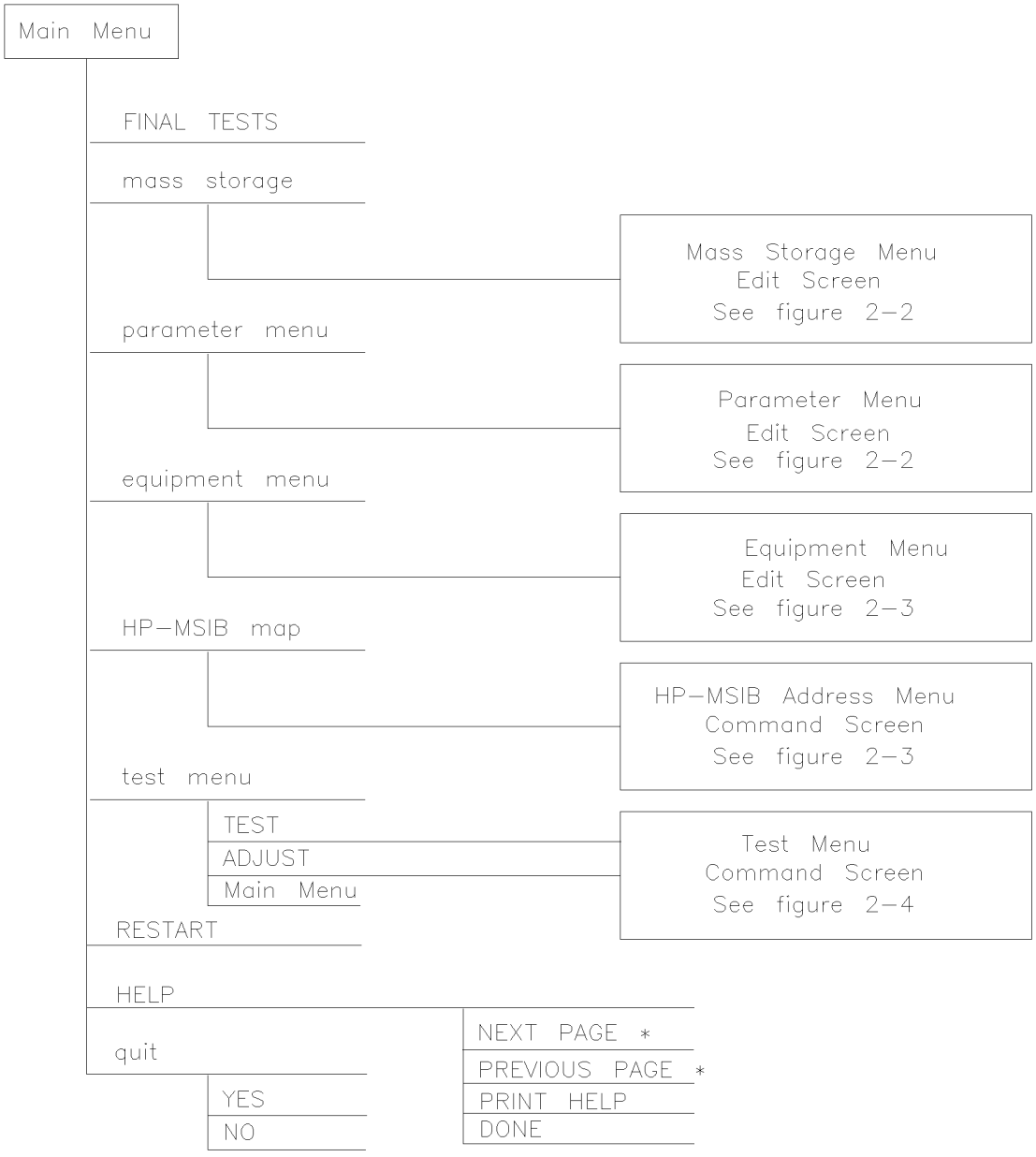

Figure 2-1. Main Menu Softkeys

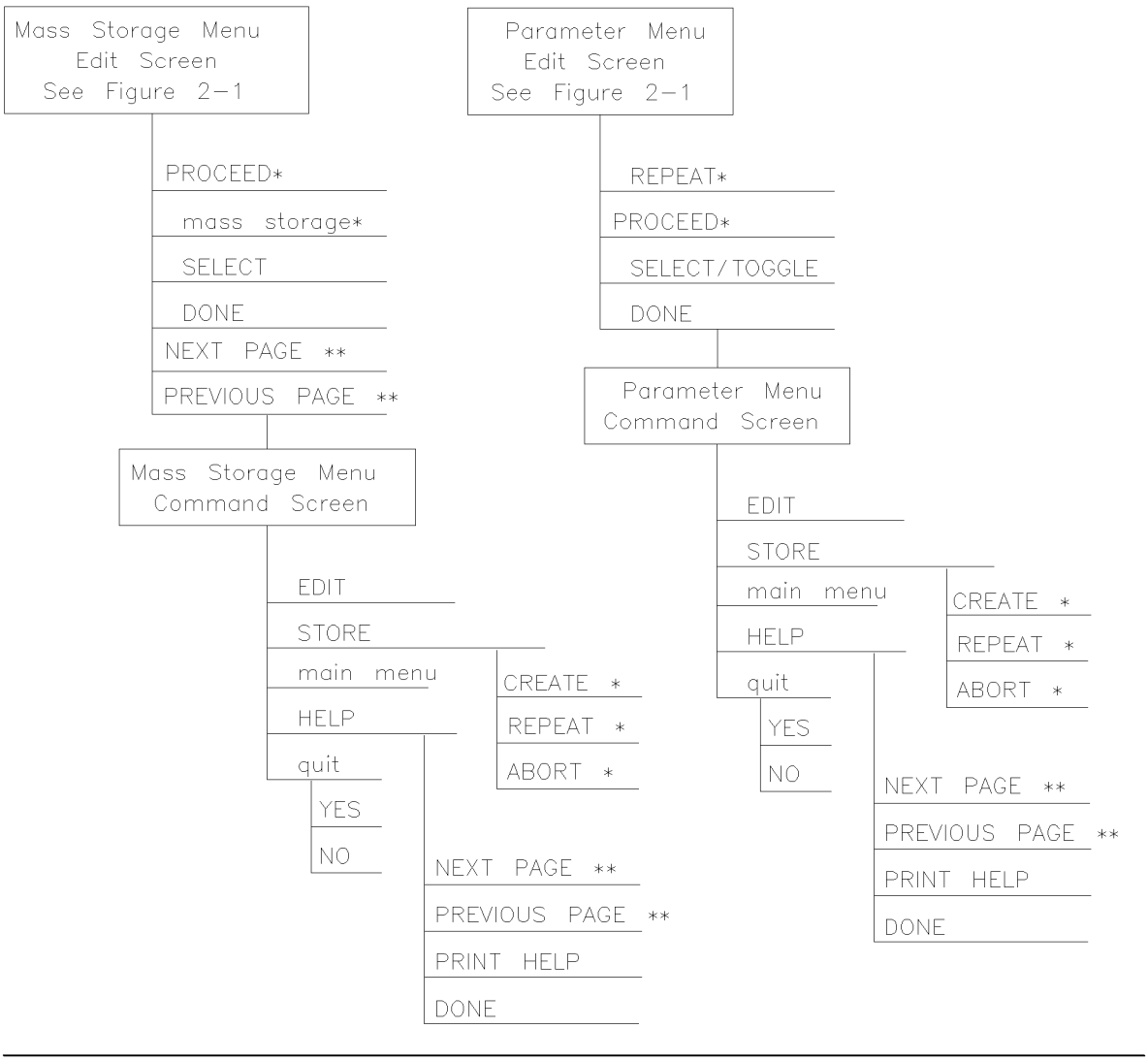

* Present when the program does not find a file on the Operating Disc.
** Present when more pages of information are available.

mvmass

Figure 2-2. Mass Storage Menu and Parameter Menu Softkeys

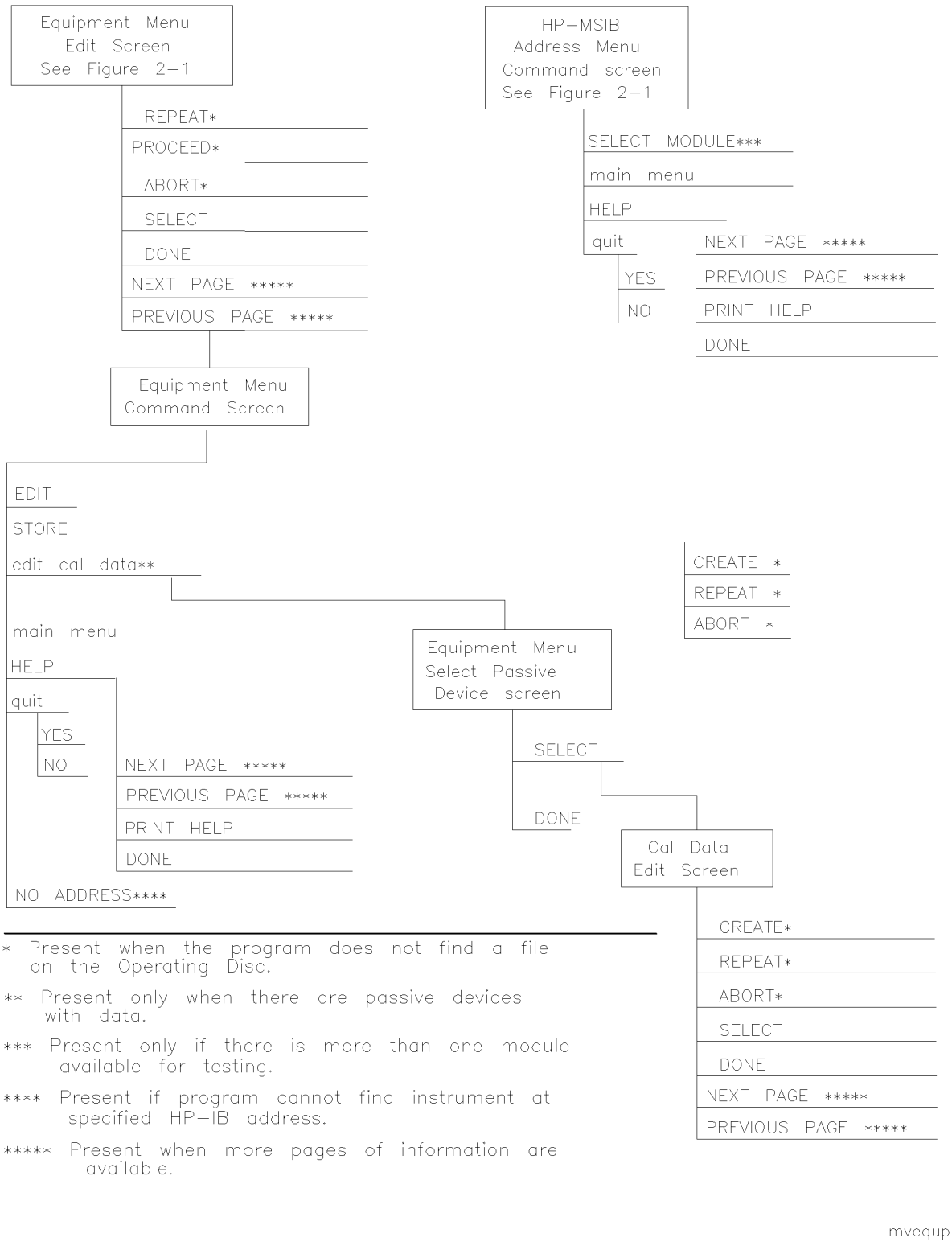

Figure 2-3. Equipment Menu and HP-MSIB Map Screen Menu Softkeys

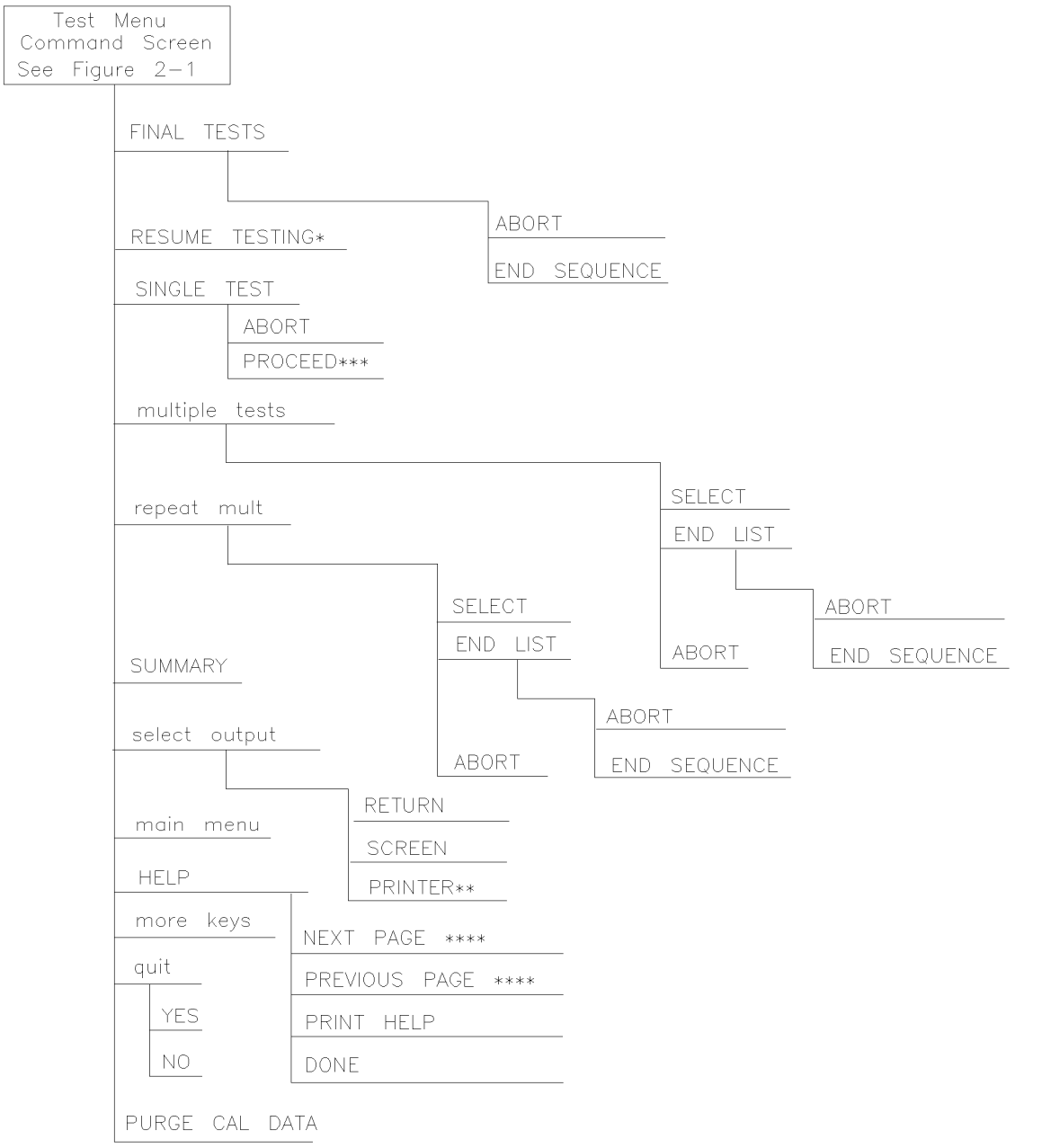

* Present only if END SEQUENCE was previously selected for FINAL TESTS.

** Present only if a printer address is available in Equipment Menu.

*** Present when you've selected SINGLE TEST for a test having missing ETE in the status column.

**** Present when more pages of information are available.

mvtest

Figure 2-4. Test Menu Softkeys

Error and Status Messages

User interface messages used with HP 70000 Series software products are alphabetized in this section. The messages are designed to provide information about test results, operator errors, and system conditions. Refer to your *HP BASIC Language Reference* for system error information.

`Aborted`

You aborted the test indicated.

`EEPROM for ____ is defective.`

The EEPROM needs to be replaced.

`Failed`

The module under test needs adjustment or repair to pass the test number indicated.

`CAUTION: Passthru address is incorrect. (See Edit Screen).`

The address of the microwave source is not set to 19, or the address specified in the Equipment Menu does not match the address of the synthesized source. Return to the edit screen of the Equipment Menu to modify addresses in either the address column or the private bus column.

`CAUTION: Some Model #'s are not supported. (See Edit Screen).`

You have model numbers in the Equipment Menu that are not supported by the software. Ignore this caution if you are sure program memory contains a driver for these models. A driver that is required but missing causes the error message `Undefined function or subprogram` to appear on-screen. You are returned to the Test Menu.

`Equipment list is not acceptable.`

You attempted to enter the Test Menu, but the program could not locate all the instruments for which you have specified HP-IB addresses. Verify that the indicated equipment is turned on, then return to the Equipment Menu edit screen to verify accuracy of addresses that are flashing in either the address column or the private bus column.

`Equipment list shows no analyzer to test.`

The DUT has no assigned HP-IB address. Return to the Equipment Menu and edit the Address column.

`ERROR: Address matches system disk drive.`

You entered an HP-IB address matching that of the computer's external disk drive. HP-IB protocol allows only one instrument per address.

`Address not in acceptable range.`

You entered an HP-IB address outside the range 700 to 730, inclusive.

`ERROR: Duplicate HP-IB address.`

You attempted to exit the Equipment Menu after assigning the same HP-IB address to different model numbers. HP-IB protocol allows only one instrument per address. (It is acceptable to assign the same address to identical model numbers, implying multiple use of the same instrument.)

`ERROR: Non-responding HP-IB address.`

You attempted to exit the Equipment Menu after assigning an HP-IB address to an instrument not responding on HP-IB.

ERROR: Search for ____ unsuccessful.

The program tried to find the disk identified but could not. Either assign a drive to the disk and press REPEAT or insert the required disk into its appropriate drive. Press REPEAT.

ERROR: Some devices listed as Available require serial numbers.

You pressed View Cal Data, then selected a device to which you have not assigned a required serial number. Display the Equipment Menu edit screen and assign the serial number.

ERROR MESSAGE: Address is HP-IB controller address.

You entered an HP-IB address matching the computer's address. HP-IB protocol allows only one instrument per address.

ERROR MESSAGE: Attempt to close file ____ failed.

There is a problem with the data file on the Operating Disk. Correct the problem, then do one of the following:

- Press REPEAT to try again.
- Press CREATE to create a new file.
- Press ABORT to return to the Main Menu.

ERROR MESSAGE: Attempt to create file ____ failed.

There is a problem with the data file on the Operating Disk. Correct the problem, then do one of the following:

- Press REPEAT to try again.
- Press CREATE to create a new file.
- Press ABORT to return to the Main Menu.

ERROR MESSAGE: Attempt to Edit Mass Storage failed.

Your edits to the Mass Storage Menu were not valid. Return to this menu and correct the errors.

ERROR MESSAGE: Attempt to store Mass Storage failed.

You pressed ABORT after pressing STORE mass storage. The Mass Storage Menu failed.

Press ABORT to return to the Main Menu.

ERROR MESSAGE: Bad instrument address in equipment list. Address matches controller.

You entered an HP-IB address matching that of the controller. HP-IB protocol allows only one instrument per address and only one controller per HP-IB system. (The factory preset controller address is 21.)

ERROR MESSAGE: Calibration data frequency exceed acceptable limits.

Return to the Calibration Data edit screen and correct the data entries that are flashing.

ERROR MESSAGE: Calibration data frequency is less than minimum range of ____.

The frequency entered next to the device in the Cal Data edit screen is out of the device's operating range. The return to this screen is automatic. Enter valid frequencies for the values that are flashing.

ERROR MESSAGE: Calibration data frequency is greater than maximum range of ____.

The frequency entered next to the device in the Cal Data edit screen is out of the device's operating range. The return to this screen is automatic. Enter valid frequencies for the values that are flashing.

ERROR MESSAGE: Calibration data for ____ is blank for some frequencies listed.

Return to the Calibration Data edit screen to enter the calibration data for frequencies indicated with flashing markers.

ERROR MESSAGE: Calibration data for ____ is less than minimum range of ____.

The factor entered next to the device in the Cal Data edit screen is out of the device's operating range. The return to this screen is automatic. Enter valid values for the ones that are flashing.

ERROR MESSAGE: Calibration data for ____ is greater than maximum range of ____.

The factor entered next to the device in the Cal Data edit screen is out of the device's operating range. The return to this screen is automatic. Enter valid values for the ones that are flashing.

ERROR MESSAGE: Calibration data file not found for ____ with serial number ____.

The data file cannot be found or there is a problem with the data file on the Operating Disk. Correct the problem, then either press REPEAT to try again or press (CONTINUE).

ERROR MESSAGE: DUT does not have an address.

You attempted to leave the Test Equipment Menu, but the program cannot verify the DUT at the specified HP-IB address. First check the address. If the address is correct, cycle the main power of the system under test.

ERROR MESSAGE: DUT was not at address in the equipment list. DUT was expected at address ____.

The DUT is not at the specified address, or HP-IB is at fault, or main power is off on the DUT. Press ABORT, then return to the Equipment Menu to verify the address.

ERROR MESSAGE: DUT was not found at address in equipment list.

The address specified for the DUT is not valid. Press ABORT, then return to the Equipment Menu to verify the address.

ERROR MESSAGE: Equipment address matches external disk drive.

You entered an equipment address matching that of the external disk drive. HP-IB protocol allows only one instrument per address.

ERROR MESSAGE: Equipment Menu data not found on ____.

The program could not find the Equipment Menu data file on the Operating Disk. Possible Fix instructions appear with the on-screen error message. If the data file is available in a location other than the one currently specified in the Mass Storage Menu, return to that menu and change the msus and/or the directory path of the Operating Disk. It may also be that the Operating Disk accessed by the program is not the one containing the Equipment Menu file. Insert the correct Operating Disk, then press REPEAT or (CONTINUE).

ERROR MESSAGE: Equipment does not have an address.

There is no address assigned to the DUT. Return to the Equipment Menu edit screen and verify or enter an address in the Address column.

ERROR MESSAGE: ERROR XXX in XXXXX ____ .

An unanticipated occurrence in the program caused a program failure. For clarification, call your Hewlett-Packard Sales and Service Office.

ERROR MESSAGE: File ____ not found while assigning I/O path.

You attempted to STORE a list (equipment, mass storage, or parameter) for the first time on the current Operating Disk. Possible Fix instructions appear with the on-screen error message. Follow the on-screen instructions or return to the Mass Storage Menu to change the location of the Operating Disk.

ERROR MESSAGE: Incorrect Volume found. ____ required.

The wrong disk is in the required storage medium. Either correct the fault and press REPEAT to retry, or select mass storage to return to the Mass Storage Menu. From here you can indicate a different mass storage drive.

ERROR MESSAGE: Parameter Menu data not found on ____.

The program could not find Parameter Menu data file on the Operating Disk. Possible Fix instructions appear with the on-screen error message. If the data file is available in a location other than the one currently specified in the Mass Storage Menu, return to that menu and change the msus and/or the directory path of the Operating Disk. It may also be that the Operating Disk accessed by the program is not the one containing the Parameter Menu data file. Insert the correct Operating Disk, then press REPEAT or (CONTINUE).

ERROR MESSAGE: Read ____ data from file ____ failed.

There is a problem with the data file on the Operating Disk. Correct the problem, then either press REPEAT to try again or (CONTINUE) to use default values.

ERROR MESSAGE: Selected instrument under test is ____; but the software supports the ____.

The module entered in the HP-MSIB map is not currently supported by software. Either load the correct software or select a different module in the Equipment Menu or HP-MSIB Map Menu.

ERROR MESSAGE: Sensor model # ____ not supported.

Software does not support the sensor model number entered for the Signal Sensor in the Equipment Menu. Return to the Equipment Menu and select a sensor with a model number that is supported. (Refer to Chapter 5 for a list of supported equipment.)

ERROR MESSAGE: Test Parameter data file not found on ____.

The program could not find parameter-list data file on the Operating Disk. Possible Fix instructions appear with the on-screen error message. If the data file is available in a location other than the one currently specified in the Mass Storage Menu, return to that menu and change the msus and/or the directory path of the Operating Disk. It may also be that the Operating Disk being accessed by the program is not the one containing the parameter-list data file. Insert the correct Operating Disk, then press REPEAT or (CONTINUE).

ERROR MESSAGE: The ____ is listed as the DUT in the Equipment Menu, but the ____ is selected in the HP-MSIB Address Menu.

The DUT and the model selected in the HP-MSIB Address Map do not agree. You are given suggested fix instructions either to modify the module or change the DUT.

ERROR MESSAGE: The Operating Disk is write protected.

Make a working copy of the Operating Disk and store the original in a safe place, or remove the write-protect.

ERROR MESSAGE: Too many Cal Data frequencies were eliminated. There must be at least two frequencies.

Only one Cal Frequency remains in the Cal Data edit screen. Return to that screen and enter more frequencies in the Frequency column.

ERROR MESSAGE: Write ____ data to file ____ failed.

There is a problem with the data file on the Operating Disk. Correct the problem, then do one of the following:

- Press REPEAT to try again.
- Press CREATE to create a new file.
- Press ABORT to return to the Main Menu.

ERROR MESSAGE: Wrong device at specified address. DUT was expected at address ____.

The address specified for the DUT is actually that of a test instrument. Possible Fix instructions appear with the on-screen error message. If necessary, return to the Equipment Menu.

ERROR MESSAGE: ____ Volume was not located.

The program cannot access the listed Volume. If the Volume is correct, press REPEAT to retry. If the Volume is incorrect, press mass storage to return to the Mass Storage Menu. From here you can indicate a different mass storage medium for the Volume in question.

FORMAT ERROR: Observe date format and character position.

You entered the date/time in an unacceptable format. Enter date/time in the format dd mmm yyyy and hh:mm, then press (ENTER).

Hdw Broken

Actual test results far exceed the expected results. This is often an indication of a hardware failure (hardware broken) or incorrect connections.

Logging errors to ERRORLOG failed. Operating Disk is write protected.

The program tried to store error data onto the Operating Disk and could not because of the write-protect. Make a working copy of the Operating Disk and store the original in a safe place, or remove the write-protect.

KEYBOARD SYSTEM CRASH WITH KEYBOARD: ____.

The software program does not support the current keyboard. Install a keyboard having one of the part numbers listed at the beginning of this chapter, then restart the program.

Passed

The module meets the tested characteristics. PAUSED. PRESS CONTINUE.

You pressed (PAUSE) on the computer keyboard. Press (CONTINUE) to resume program execution.

PRGM ERROR

The program detected an error within itself. For clarification contact Hewlett-Packard *Santa Rosa Systems Division.*

Reading errors from ERRORLOG failed. Check disk at ____.

The program tried to read error data from the Operating Disk. Check that the Operating Disk is installed in the drive specified in the error message.

`Return to Equipment Menu to enter serial number for ____.`

You must return to the Equipment Menu edit screen and enter a SERIAL or ID NO. for the passive device selected before you can edit the device's calibration data.

`Setup Error`

The program aborted the test after attempting to verify the test setup. Ensure that all required ETE is present, has been turned on, and is properly connected.

`SORRY, but your SERIAL NUMBER must end in a NUMERIC -- This is ____.`

Contact Hewlett-Packard *Santa Rosa Systems Division* for assistance.

`Test can not be done.`

Required ETE is missing. Return to the Equipment Menu and enter all ETE listed as required for the current test.

`TEST_LIST is not compatible.`

A bad test list exists. Contact Hewlett-Packard *Santa Rosa Systems Division* for assistance.

`The controller does not have sufficient memory. This software cannot load. See the computer hardware system documentation for information on adding additional memory.`

Either refer to the appropriate manual to extend the memory capability of your system, or off-load some data to make room for the program.

`The ____ at address ____ was not found on HP-IB.`

When Verify HP-IB is set to ON in the Parameter Menu, this error message displays the ETE with the address that is either missing or not set to ON.

`The 436A is in lowest range, waiting 10 seconds.`

The current power measurement requires the lowest power-meter range. Program execution will resume in 10 seconds.

`The 8902A needs repair (Error 6).`

There is a problem related to the HP 8902A measuring receiver. Correct the fault or return to the Equipment Menu where you can enter a different model number.

`The DUT must have an HP-IB address.`

You attempted to leave the Equipment Menu, but the program cannot find the HP 70000 system at the assigned HP-IB address.

`THIS COLUMN CAN NOT BE EDITED.`

You pressed `SELECT` with the cursor positioned in the first column of the Mass Storage edit screen or the Equipment Menu edit screen. This column cannot be edited.

`THIS IS ____ AND FOUND DUPLICATE FILES: ____.`

Contact Hewlett-Packard *Santa Rosa Systems Division* for assistance.

`This test can not be selected because of missing ETE.`

You were in either Multiple Tests or Repeat Multiple, then tried to select a test that has missing ETE. This is not allowed. Check the Status column of the Test Menu to verify a `Missing ETE` tag next to the test name you attempted to select.

`Timed Out`

The program aborted the test.

`WARNING: Duplicate Address`

You entered a duplicate HP-IB address to an item in the Equipment Menu. (You may have to scroll through the menu to find the duplication.)

`WARNING: Duplication may exclude specific tests.`

You assigned two generic device functions to one ETE. (For example, the TOI test will not be run if you assign a single HP 3335A synthesizer/level generator as both the required level generator and the required general source.)

`WARNING: String is too long. It has been truncated.`

You entered too many characters in a user's line of the Parameter Menu edit screen. Select the line and enter 30 or fewer characters.

`Write protected.`

You attempted to store data on a write-protected disk. After correcting the fault, press CONTINUE.

3

Before Extensive Servicing

This chapter contains information to help identify and resolve some common problems that may occur with your HP 70900B local oscillator source before extensive servicing.

Symptoms to various problems are listed at the top of each page. Most symptoms have a brief description or explanation to help provide more insight into their cause. A possible cause for the symptom and a checklist of possible solutions are then presented. Use this checklist as an aid to correct the problem.

If you determine that your HP 70900B local oscillator source needs further servicing and your HP 70900B local oscillator source is not experiencing any of the symptoms presented in this chapter, refer to "Performing Related Adjustments and Verification Tests" in Chapter 4 to determine which adjustments and verification tests must be performed and also Table 5-1 for a list of recommended test equipment to use when assemblies are changed, repaired, or adjusted.

Note If you decide to perform the servicing yourself, prepare a static-safe work station before you begin any servicing procedures. (Refer to "Preparing a Static-Safe Work Station" in Chapter 4.) If you do not wish to perform the servicing yourself, return your HP 70900B local oscillator source to a Hewlett-Packard service center. (Refer to "If You Want Hewlett-Packard to Service Your Local Oscillator Source" in Chapter 1.)

If the System's Power-On Self Test Fails

Each time the HP 70000 Series modular spectrum analyzer system is turned on, the system runs through an initializing routine (power-on self test) during which the front panel STATUS LEDs on each module flash on momentarily and then turn off.

If the system passes the power-on self test, the MEASURE LED on the local oscillator module begins blinking on and off (triggered by the system sweep), and the ACT LED on each active module's front panel is turned on.

If any module fails the self test, it will not establish a link with the display. If the front panel LEDs on the HP 70900B local oscillator source flash on and off, it means the instrument has failed the power-on self test.

To solve this problem:

- ☐ Check that the HP 70900B local oscillator source is powered on.
- ☐ Check that the HP 70000 Series modular spectrum analyzer system display and mainframe are plugged into the proper ac line voltage.
- ☐ Check that the line socket has ac line voltage.
- ☐ Check that the line voltage selector switch is set to the correct voltage for the ac line voltage being used. The line voltage selector switch is located on the left side of the HP 70004A color display, on the bottom of the HP 70001A mainframe, or on the rear panel of the HP 70206A system graphics display.

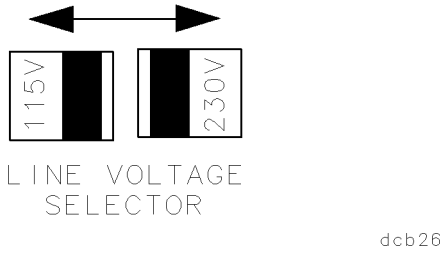

Figure 3-1. Line Voltage Selector

- ☐ Check the line fuse on the display or the mainframe to ensure that it is not damaged. The line fuse is located inside the power-cord receptacle housing on the rear of the display and mainframe. Also included in this housing is a spare fuse. The fuse is a 5 by 20 mm fuse rated at 6.3 A, 250 V (HP part number 2110-0703). This line fuse can be used with both 120 V and 230 V line voltage.

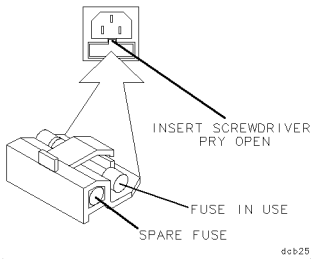

Figure 3-2. Line Fuse Removal and Replacement

- ☐ Check the A3 power supply by removing the module from the mainframe and installing it on an extender cable (HP part number 70001-60013). With the power turned off, remove the module's outer cover. Confirm that the yellow and green LEDs on the top of the A3 power supply are lit. If any of these LEDs is not lit, the A3 power supply may need servicing.
- ☐ Check the address map. (Refer to Table 3-1.)
- ☐ Check the system interconnections.
- ☐ If necessary, obtain service from Hewlett-Packard. Refer to "If You Want Hewlett-Packard to Service Your Local Oscillator Source" in Chapter 1.

Table 3-1. Default HP-MSIB Address Map

	Column 18	**Column 19**	**Column 20**
Row 7	blank	HP 70310	blank
Row 6	RF sections[1]	HP 70300	HP 70620 or HP 70621[2]
Row 5	HP 70907	HP 70301	blank
Row 4	HP 70903	blank	HP 70810 Option 850
Row 3	HP 70911	HP 70620 or HP 70621[3]	HP 70810
Row 2	HP 70700	HP 70600 or HP 70601	blank
Row 1	HP 70902	blank	blank
Row 0	HP 70900	blank	blank

1 This includes: HP 70904A RF section, HP 70905A/B RF section, HP 70906A/B RF section, HP 70908A RF section, HP 70909A or HP 70910A RF section.

2 When preamplifying the lightwave section's input signal.

3 When preamplifying the preselector's or RF section's input signal.

For more information about addressing criteria, refer to *HP 70000 Modular Spectrum Analyzer Installation and Verification Manual.*

If Your HP 70900B Local Oscillator Source Is Powered On But Not Responding Correctly

Many different things could cause this type of symptom.

To solve this problem:

- ☐ Check the HP 70000 Series modular spectrum analyzer system display for error messages.
- ☐ Check the address map to see that the HP 70900B local oscillator source is located at row 0, column 18. All other modules should be in the order given in the address map guidelines. (Refer to Table 3-1.)
- ☐ Check that other modules in the system, cables, and connectors are connected and operating correctly.
- ☐ If necessary, obtain service from Hewlett-Packard. (Refer to "If You Want Hewlett-Packard to Service Your Local Oscillator Source" in Chapter 1.)

If the STATUS ERR Indicator LED on the HP 70900B Local Oscillator Source is Flashing

The HP 70900B local oscillator source communicates with the HP 70000 Series modular spectrum analyzer system over the HP-MSIB. When the STATUS ERR indicator LED on the HP 70900B local oscillator source flashes at a 1 Hz rate, the module cannot communicate over the HP-MSIB.

To solve this problem:

- Try turning off the power to the system and then turning it on again.
- If front panel keys are still responding, check the address map to see that all modules are located in their designated coordinates.
- If front panel keys are not responding and the address map cannot be checked, power-down the system, pull out each module and check its address setting by looking at its address switches.

  All modules should conform to the required coordinates on the address map. (Refer to Table 3-1.)
- If your system contains more than one mainframe, check that the HP-MSIB cables are connected such that two cable connections are made to each mainframe. If these cable connections look correct, you may try replacing the HP-MSIB cables with new ones.
- If necessary, obtain service from Hewlett-Packard. (Refer to "If You Want Hewlett-Packard to Service Your Local Oscillator Source" in Chapter 1.)

If More Than One Module's Error Indicator Is Flashing

The HP 70900B local oscillator source communicates with the HP 70000 Series modular spectrum analyzer system over the HP-MSIB. When the STATUS ERR indicator LED on a particular module flashes at a 1 Hz rate, the module cannot communicate over the HP-MSIB.

To solve this problem:

- □ Try turning off the power to the system and then turning it on again.
- □ If front panel keys are still responding, check the address map to see that all modules are located in their designated coordinates.
- □ If front panel keys are not responding and the address map cannot be checked, power-down the system, pull out each module and check its address setting by looking at its address switches.

  All modules should conform to the required coordinates on the address map. (Refer to Table 3-1.)
- □ If your system contains more than one mainframe, check that the HP-MSIB cables are connected such that two cable connections are made to each mainframe. If these cable connections look correct, you may try replacing the HP-MSIB cables with new ones.
- □ If necessary, obtain service from Hewlett-Packard. (Refer to "If You Want Hewlett-Packard to Service Your Local Oscillator Source" in Chapter 1.)

4

Troubleshooting

This chapter contains information about troubleshooting your local oscillator source. It presents information on preparing a static-safe work station and then it presents a set of troubleshooting procedures that can be used to optimize repair time.

A flow chart (as shown in Figure 4-2) directs you to the appropriate troubleshooting procedures.

A listing of adjustments and verification tests that must be performed, as well as the recommended test equipment that should be used when assemblies are changed, repaired, or adjusted are presented at the end of this chapter.

Preparing a Static-Safe Work Station

Electrostatic discharge (ESD) can damage or destroy electronic components. Therefore, all work performed on assemblies consisting of electronic components should be done at a static-safe work station.

Figure 4-1 shows an example of a static-safe work station. Two types of ESD protection are shown:

- a conductive table mat and wrist strap combination
- a conductive floor mat and heel strap combination

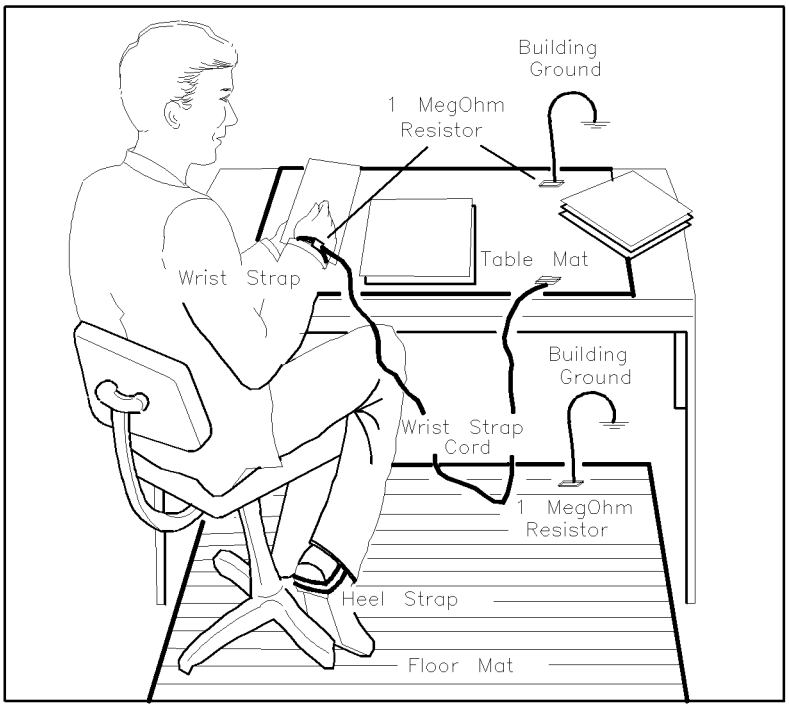

Figure 4-1. Static-Safe Work Station

These two types of ESD protection must be used together. Refer to Table 4-1 for a list of static-safe accessories and their HP part numbers.

CAUTION

- Do not touch the edge-connector contacts or trace surfaces with bare hands. Always handle board assemblies by the edges.
- Do not use erasers to clean the edge-connector contacts. Erasers generate static electricity and degrade the electrical quality of the contacts by removing the thin gold plating.
- Do not use paper of any kind to clean the edge-connector contacts. Paper or lint particles left on the contact surface can cause intermittent electrical connections.

Reducing ESD Damage

To help reduce the amount of ESD damage that occurs during testing and servicing use the following guidelines:

- Be sure that all instruments are properly earth-grounded to prevent buildup of static charge.
- Personnel should be grounded with a resistor-isolated wrist strap before touching the center pin of any connector and before removing any assembly from a piece of equipment.

  Use a resistor-isolated wrist strap that is connected to the HP 70000 Series modular spectrum analyzer system mainframe's chassis. If you do not have a resistor-isolated wrist strap, touch the chassis frequently to equalize any static charge.
- Before connecting any coaxial cable to an instrument connector for the first time each day, *momentarily* short the center and outer conductors of the cable together.
- Handle all PC board assemblies and electronic components only at static-safe work stations.
- Store or transport PC board assemblies and electronic components in static-shielding containers.
- PC board assembly edge-connector contacts may be cleaned by using a lintfree cloth with a solution of 80% electronics-grade isopropyl alcohol and 20% deionized water. This procedure should be performed at a static-safe work station.

Static-Safe ESD Accessories

Table 4-1. Static-Safe ESD Accessories

HP Part Number	Description
9300-0797	Set includes: 3M static control mat 0.6 m × 1.2 m (2 ft × 4 ft) and 4.6 m (15 ft) ground wire. (The wrist-strap and wrist-strap cord are not included. They must be ordered separately.)
9300-0865	Ground wire, 4.6 m (15 ft)
9300-0980	Wrist-strap cord 1.5 m (5 ft)
9300-1383	Wrist-strap, color black, stainless steel, without cord, has four adjustable links and a 7 mm post-type connection.
9300-1169	ESD heel-strap (reusable 6 to 12 months).
Order the following by calling HP DIRECT at (800) 538-8787 or through any Hewlett-Packard Sales and Service Office.	

Troubleshooting Flow Chart

The (“Troubleshooting Flow Chart”) for the HP 70900B local oscillator source directs you to troubleshooting procedures in this chapter. The major decision blocks are described in the following sections.

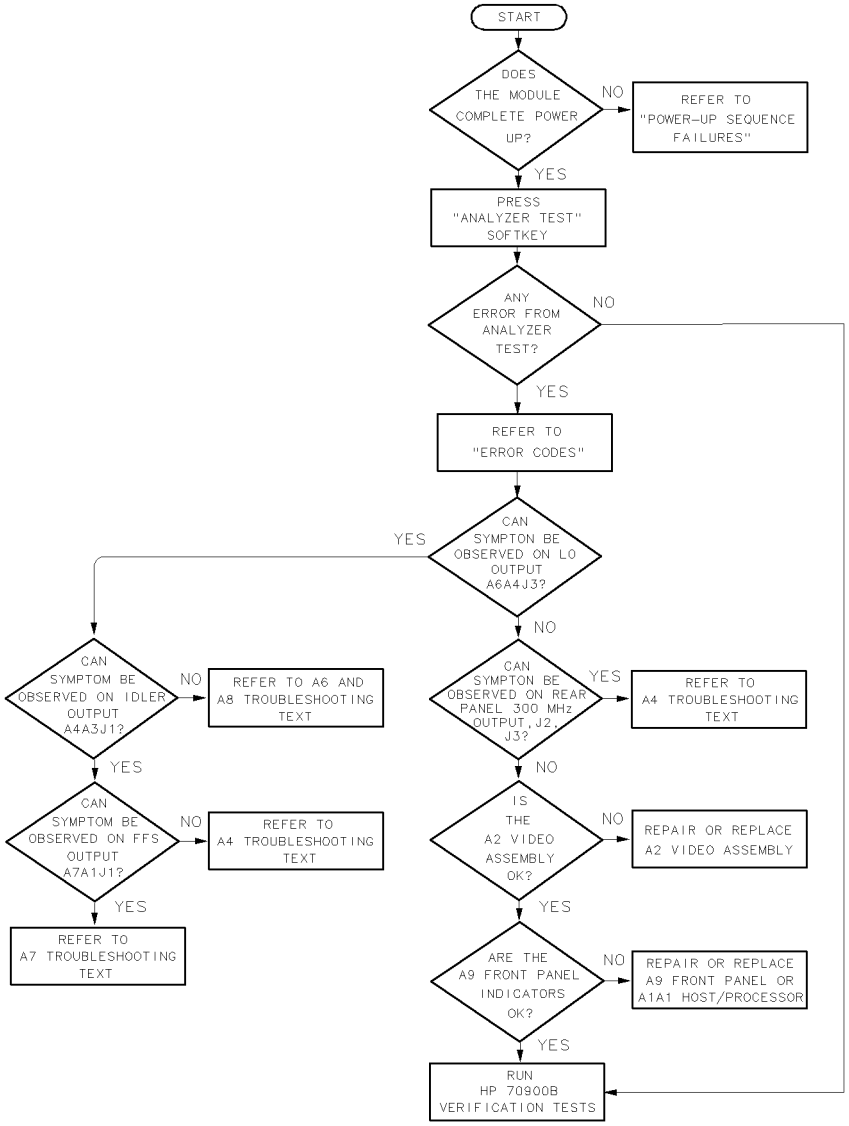

Figure 4-2. Troubleshooting Flow Chart

Does the Module Complete Power-Up?

The power-up sequence is performed automatically by the local oscillator source each time power is applied. If the local oscillator source can’t complete its power-up sequence, it will not establish a link with the display. If this happens, all local oscillator source front panel LEDs will flash on and off. (Refer to “If the System’s Power-On Self Test Fails” in Chapter 3.)

Any Errors from the Analyzer Test?

To perform the analyzer-test sequence, press (MENU) MISC, MORE, SERVICE, and ANALYZER TEST on the system display. Always wait at least 30 seconds after power-up before performing the analyzer-test sequence. Analyzer Test checks for the presence of key reference signals, the ability of the three phase-lock loops to lock at their maximum and minimum points, the linearity of all digital-to-analog converters (DACs), and analog-to-digital converter (ADC) performance.

Can the Symptom Be Observed on the LO Output?

Reaching this point in the troubleshooting flow chart means the local oscillator source's three phase-lock loops (PLLs) can lock. These PLLs are the A4 idler phase-lock loop, A6 YTO phase-lock loop/A8 frequency control, and A7 FRAC'N synthesizer. Any remaining problems are likely due to noise or sidebands, frequency-dependent unlocks, intermittent unlocks, faulty rear panel outputs, or video detector failures. Can noise, sidebands, or unlock conditions be observed on the local oscillator source's rear panel LO signal? (The rear panel jack is A6A4 YTO lock microcircuit (J3).) If the symptom is present at A6A4 YTO lock microcircuit (J3), observe the idler output. If the symptom is not present, observe the 300 MHz rear panel output to verify that it meets its amplitude specification.

Can the Symptom Be Observed on the Idler Output?

Place the local oscillator source on an HP 70001-60013 extender module. Remove the local oscillator source cover. Can the noise, sidebands, or unlock conditions be observed on the idler signal at A4A3 idler VCO microcircuit (J2)? If the symptom cannot be observed, the problem is in the YTO lock loop. If it is observed at A4A3 idler VCO microcircuit (J2), inspect the signal at A7A1 FFS phase lock loop (J1). If the symptom is observed at A7A1 FFS phase lock loop (J1), refer to "A7 FRAC'N Synthesizer Troubleshooting". If the symptom is not observed at A7A1 FFS phase lock loop (J1), refer to "A4 Idler Phase-Lock Loop Troubleshooting".

Can the Symptom Be Observed on the Rear-Panel 300 MHz Output?

Can the symptoms be observed on the two rear panel 300 MHz outputs? Measure the power of the 300 MHz front panel calibrator signal. The power should be −10 dBm ±0.3 dB.

Is the A2 Video Processor OK?

Perform the following steps to test the A2 video processor:

1. Set an HP 3325B synthesized function/sweep generator to the following settings:

   FREQ ..... 20 Hz
   AMPTD ..... 2 V
   DC OFFSET ..... 1 V
   FUNCTION ..... Triangle wave

2. Set the HP 70900B local oscillator source to the following settings:

   SPAN ..... 0 Hz
   SWEEP TIME ..... 60 ms
   SWEEP ..... CONTINUOUS
   Cal corrections ..... ALL OFF
   EXTERNAL TRIGGER ..... ON

3. Connect the front panel SYNC OUT of the HP 3325B synthesized function/sweep generator to the HP 70900B local oscillator source's rear panel EXT TRIG. Connect the HP 3325B synthesized function/sweep generator SIGNAL output to the HP 70900B local oscillator source's rear panel VIDEO jack.
4. Verify that the triangle wave on the spectrum analyzer's display is linear. Check the analog-to-digital converter bits. If necessary, use the dB/DIV and reference level to expand the scale to inspect the least significant bit (LSB). (1 LSB $\approx$ 0.27 dB $\approx$ 500 μV.) If the CRT display is linear, either the A2 video processor or the A1A1 host/processor is faulty.
5. Check the detectors on the A2 video processor. With a signal on the screen and a span less than 10 MHz, press the MENU key, TRACE, then DETECTOR. Verify that POS PK, NEGPK, SAMPLE, and NORMAL detectors all give similar amplitude readings in the uncorrected mode ($\pm$1 dB referenced to SAMPLE detector). If any problems are found, run the video processor adjustment procedure described in Chapter 6. If the assembly cannot be adjusted, change the A2 video processor.

Are the A9 Front Panel Indicators OK?

Run the LED Check verification test. If the test passes, run the remaining verification tests.

If Operating Errors Messages (2000–2999) Occur

These operating errors occur when the processor on the A1A1 host/processor receives an unrecognizable command.

2011 **Memory Overflow**

To solve this problem:

1. Confirm that the error is caused by the HP 70900B local oscillator source.
2. Make sure the error is not caused by a user-defined function, or any other user-input command or program.
3. Execute a `DISPOSE ALL` command (refer to the *HP 70000 Modular Spectrum Analyzer Programming Manual*) and set N STATES to 0. This will erase all user input programs.
4. If the problem still exists, replace the A1A1 host/processor or A1A2 1/4 MB RAM/ROM.

2034 **Test Switch Is On**

To solve this problem:

1. Confirm that the error is caused by the HP 70900B local oscillator source.
2. Make sure the error is not caused by a user-defined function, or any other user-input command or program.
3. Set A1A1 host/processor (S2) switch 1 to the “1” position (open) when this error code appears.
4. If the switch is already in the “1” position, replace the A1A1 host/processor.

If Hardware Error Messages (7000–7999) Occur

Hardware errors are generated when a module in the HP 70000 Series modular spectrum analyzer system is not working properly. These errors can occur at any time. Hardware errors range from 7000–7999.

Because HP 70900B local oscillator source assemblies operate inner-dependently, a single problem can cause multiple errors. Troubleshoot these errors in the order in which they are reported.

One or more of the following hardware error messages may appear on your system display; these errors can occur at any time:

7000 **ROM check**

This hardware error occurs when a checksum computed on the ROM at power-up fails.

To solve this problem:

1. Replace the A1A1 host/processor or the A1A2 1/4 MB RAM/ROM.
2. If necessary, obtain service from Hewlett-Packard. (Refer to "If You Want Hewlett-Packard to Service Your Local Oscillator Source" in Chapter 1.)

7001, 7002 **1st LO unleveled**

This hardware error, sent from slave modules, indicate the LO signal is unleveled.

To solve this problem:

1. Check the LO power at A6A4 YTO lock microcircuit (J3), the rear panel LO jack. Refer to "YTO Unlock" under "A6 YTO Phase-Lock Loop/A8 Frequency Control Troubleshooting".

7003 **2nd LO unlocked**

7004 **2nd LO unlocked**

These hardware errors, sent from slave modules, indicates a second LO is unlocked.

To solve this problem:

1. Check rear panel 300 MHz outputs. (Refer to "A4 Idler Phase-Lock Loop Troubleshooting".)
2. Check 2nd LO and 2nd Mixer in front end.

7008 **FFS handshake**

The A1A1 host/processor originates this hardware error when it cannot communicate with the A7A2 FFS analog through the W14 ribbon cable.

To solve this problem:

1. Refer to "A7 FRAC'N Synthesizer Troubleshooting".

7010 **FFS is unlocked**

This hardware error, sent from the A7A2 FFS analog to the A1A1 host/processor, indicates the A7 FRAC'N synthesizer is unlocked. It is sent from A7A2 FFS analog (J5) pin 11, through ribbon cable W14, when the tune voltage to the A7A1 FFS phase lock loop exceeds limits.

To solve this problem:

1. Refer to "A7 FRAC'N Synthesizer Troubleshooting".

7011 **125 kHz to FFS**

This hardware error, reported during a power-up or `Analyzer Test` sequence, occurs when no 125 kHz signal is present at the 125 kHz detector in the A6A1 100 MHz reference. The detector converts the signal to a voltage that is sent from A6A1 100 MHz reference (J7) pin 2, through the A11 wiring harness, and to the A2 video processor. The A1A1 host/processor reads this voltage with the analog-to-digital converter in the A2 video processor. The error occurs also when the detected voltage falls outside the +0.65 V to +0.85 V range.

To solve this problem:

1. Measure the voltage at A6A1 100 MHz reference (J7) pin 2. If the voltage is out of range, the A6A1 100 MHz reference is faulty.
2. If the voltage at A6A1 100 MHz reference (J7) pin 2 is in range, measure the voltage at A2 video processor (J3) pin 7. If this voltage is out of range, replace the A11 wiring harness.
3. If the voltage at A2 video processor (J3) pin 7 is correct, the problem is a faulty A2 video processor.

7012 **Cannot lock YTO**

This hardware error occurs when the A6 YTO phase-lock loop fails to phase lock. The A1A1 host/processor attempts to lock the YTO at the beginning of a sweep by moving the error voltage at A6A2 YTO lock (J2) off of the maximum or minimum rail value. The controller attempts to move the error voltage by changing the start-frequency tune DAC on the A8 frequency control.

To solve this problem:

1. Refer to "A6 YTO Phase-Lock Loop/A8 Frequency Control Troubleshooting".

7013 **Cannot fine tune YTO**

This hardware error occurs when the A6 YTO phase-lock loop cannot be fine-tuned. The A1A1 host/processor locks the YTO at the start of a sweep and tries to move the error voltage at A6A2 YTO lock (J6) to 0 V by changing the start-frequency correction DAC on the A8 frequency control.

To solve this problem:

1. Refer to "A6 YTO Phase-Lock Loop/A8 Frequency Control Troubleshooting".

7014 12.5 MHz to YTO lock

This hardware error, reported during a power-up or `Analyzer Test` sequence, occurs when no 12.5 MHz signal is present at the 12.5 MHz detector in the A6A1 100 MHz reference. The detector converts the signal to a voltage that is sent from A6A1 100 MHz reference (J5) pin 1, through the A11 wiring harness, to the A2 video processor. The A1A1 host/processor reads this voltage with the digital-to-analog converter in the A2 video processor. This error occurs also when the detected voltage falls outside the +0.65 V to +0.85 V range.

To solve this problem:

1. Measure the voltage at A6A1 100 MHz reference (J5) pin 1. If the voltage is out of range, the A6A1 100 MHz reference is faulty.
2. If the voltage at A6A1 100 MHz reference (J5) pin 1 is in range, measure the voltage at A2 video processor (J3) pin 6. If this voltage is out of range, replace the A11 wiring harness.
3. If the voltage at A2 video processor (J3) pin 6 is correct, the problem is a faulty A2 video processor.

7015 YTO is unleveled

This hardware error occurs when the A6A5 YTO output fails to level. The signal (HYOLVL) is sent from the A6A5 YTO through W15 pin 7 to the A8 frequency control, where it is read by the A1A1 host/processor. This error usually occurs at an LO frequency of 3 GHz, caused by the YTO.

To solve this problem:

1. Refer to "A6 YTO Phase-Lock Loop/A8 Frequency Control Troubleshooting".

7016 YTO is unlocked

This hardware error indicates an unlocked YTO PLL. The error occurs when the error voltage at A6A2 YTO lock (J6) exceeds a −9 V to +9 V range. The signal is sent from A6A2 YTO lock (J6) to the A1A1 host/processor through the A8 frequency control.

To solve this problem:

1. Refer to "A6 YTO Phase-Lock Loop/A8 Frequency Control Troubleshooting".

7018 **50 MHz to sampler**

This hardware error is reported during a power-up or `Analyzer Test` sequence, and occurs when no 50 MHz signal is present at the 50 MHz detector in the A6A1 100 MHz reference. The detector converts this signal to a voltage that is sent from A6A1 100 MHz reference (J7) pin 3, through the A11 wiring harness, and to the A2 video processor. The A1A1 host/processor reads this voltage with the analog-to-digital converter in the A2 video processor. This error also occurs when the detected voltage falls below 0.5 V.

To solve this problem:

1. Measure the voltage at A6A1 100 MHz reference (J7) pin 3. If it is between 0.35 V and 0.5 V, replace the A6A1 100 MHz reference. If the voltage level is less than 0.35 V, the A6A1 100 MHz reference or A6A4 YTO lock microcircuit probably are faulty.
2. If the voltage at A6A1 100 MHz reference (J7) pin 3 is correct, measure the voltage at A2 video processor (J3) pin 1. If the voltage is out of range, replace the A11 wiring harness.
3. If the voltage at A2 video processor (J3) pin 1 is correct, the problem is a faulty A2 video processor.

7019 **300 MHz post filter**

This hardware error is reported during a power-up or `Analyzer Test` sequence, and occurs when no 300 MHz signal is present at the 300 MHz detector in the A4A1 300 MHz amplifier. The detector converts this signal to a voltage that is sent from A4A1 300 MHz amplifier (J2) pin 1, through the A11 wiring harness, to the A2 video processor. The A1A1 host/processor reads this voltage with the analog-to-digital converter in the A2 video processor. This error also occurs when the voltage falls below +0.2 V.

To solve this problem:

1. Measure the voltage at A4A1 300 MHz amplifier (J2) pin 1. If it is less than +0.2 V, the A4A1 300 MHz amplifier is faulty.
2. If the voltage at A4A1 300 MHz amplifier (J2) pin 1 is correct, measure the voltage at A2 video processor (J3) pin 5. If the voltage is out of range, replace the A11 wiring harness.
3. If the voltage at A4A1 300 MHz amplifier(J2) pin 1 is correct, the problem is a faulty A2 video processor.

7020 **300 MHz AGC**

This hardware error is reported during a power-up or `Analyzer Test` sequence, and occurs when the leveling-loop automatic gain control (AGC) voltage of the A4A1 300 MHz amplifier is incorrect. The AGC voltage is sent from A4A1 300 MHz amplifier (J2) pin 2, through the A11 wiring harness, to the A2 video processor. The A1A1 host/processor reads this voltage with the analog-to-digital converter in the A2 video processor. The error occurs when the voltage exceeds a +0.2 V to +1.5 V range.

To solve this problem:

1. Measure the voltage at A4A1 300 MHz amplifier (J2) pin 2. If the voltage is out of range, the A4A1 300 MHz amplifier is faulty.
2. If the voltage at A4A1 300 MHz amplifier (J2) pin 2 is correct, measure the voltage at A2 video processor (J3) pin 3. If this voltage is out of range, replace the A11 wiring harness.
3. If the voltage at A2 video processor (J3) pin 3 is correct, the problem is a faulty A2 video processor.

7021 **600 MHz to idler**

This hardware error is reported during a power-up or `Analyzer Test` sequence. The 600 MHz signal is output from an A4A1 300 MHz amplifier doubler circuit and used in the A4A3 idler VCO microcircuit. The error occurs when no 600 MHz signal is present at the 600 MHz detector in the A4A1 300 MHz amplifier. The detector converts the signal to a voltage that is sent from A4A1 300 MHz amplifier (J6) pin 3, through the A11 wiring harness, to the A2 video processor. The A1A1 host/processor reads this voltage with the analog-to-digital converter in the A2 video processor. An error is reported when the detected voltage falls below 1.1 V.

To solve this problem:

1. Measure the voltage at A4A1 300 MHz amplifier (J6) pin 3. If it is less than 1.1 V, the A4A1 300 MHz amplifier is faulty.
2. If the voltage at A4A1 300 MHz amplifier (J6) pin 3 is correct, measure the voltage at A2 video processor (J3) pin 4. If this voltage is out of range, replace the A11 wiring harness.
3. If the voltage at A2 video processor (J3) pin 4 is correct, the problem is a faulty A2 video processor.

7022 **Low idler range**

This hardware error, reported from a power-up or `Analyzer Test` sequence, occurs when the A4A2 idler lock detects an unlocked idler PLL loop. The tests tune the idler oscillator to its extremes in the low idler function (3.530 to 3.565 GHz) and check for an unlock condition.

To solve this problem:

1. Refer to “Idler Unlock” under “A4 Idler Phase-Lock Loop Troubleshooting”.

7023 **High idler range**

This hardware error, reported from a power-up or `Analyzer Test` sequence, occurs when the A4A2 idler lock detects an unlocked idler PLL loop. The tests tune the idler oscillator to its extremes in the high idler function (5.330 to 5.365 GHz) and check for an unlock condition.

To solve this problem:

1. Refer to "Idler Unlock" under "A4 Idler Phase-Lock Loop Troubleshooting".

7024 **Tune DAC**

This hardware error is reported only from the `Analyzer Test` sequence. It indicates a nonlinear A8 frequency control start-frequency tune digital-to-analog converter (DAC). The sweep DAC and binary span-attenuator DAC are set to 0 counts on the A8 frequency control. The start-frequency tune DAC is then checked for linearity through the tune + span line. This signal leaves through A8 frequency control (J5) pin 1, then passes through the A10 motherboard to the A2 video processor. The A1A1 host/processor monitors the signal with the DAC in the A2 video processor.

To solve this problem:

1. Check the A8 frequency control. A nonlinear, start-frequency tune DAC is usually caused by that assembly.
2. Check the A2 video processor. A nonlinear, start-frequency tune DAC; also can be caused by the A2 video processor when the wrong multiplexer channel is enabled, or when the A2 video processor is out of adjustment.

7025 **Decade span**

This hardware error is reported only from the `Analyzer Test` sequence. It indicates a faulty decade-span attenuator on the A8 frequency control. The sweep digital-to-analog converter (DAC) and binary span-attenuator DAC on the A8 frequency control are set to 4,095 counts (fully on), and the start-frequency tune DAC is set to 0 counts. During `Analyzer Test` the decade span attenuator is stepped through its positions, and the resulting output is sent to the tune + span line with A8 frequency control (J5) pin 1. This signal passes through the A10 motherboard to the A2 video processor. The A1A1 host/processor monitors this signal with the analog-to-digital converter in the A2 video processor.

To solve this problem:

1. Check the A8 frequency control.
2. Check the A2 video processor. This error can occur when the wrong multiplexer channel is enabled or when the A2 video processor is out of adjustment.

7026 **Binary attenuator**

This hardware error is reported only from the `Analyzer Test` sequence. It indicates a faulty binary span attenuator digital-to-analog converter (DAC) on the A8 frequency control. The A8 frequency control sweep DAC is set to 4,095 counts (fully on), the decade span attenuator is set for zero attenuation, and the start frequency tune DAC is set to 0 counts. The binary span attenuator DAC is then checked for linearity with the tune + span line. This signal leaves through A8 frequency control (J5) pin 1, then passes through the A10 motherboard to the A2 video processor. The A1A1 host/processor monitors this signal with the analog-to-digital converter in the A2 video processor.

To solve this problem:

1. Check the A8 frequency control.
2. Check the A2 video processor. This error can occur when the wrong multiplexer channel is enabled or when this assembly is out of adjustment.

7027 **Sweep DAC**

This error is reported only from the `Analyzer Test` sequence. It indicates a faulty sweep digital-to-analog converter (DAC) on the A8 frequency control. The A8 frequency control binary span attenuator DAC and decade span attenuator are set for zero attenuation, and the start-frequency tune DAC is set to 0 counts. The linearity of the sweep DAC is then checked with the tune+span line. This signal leaves through A8 frequency control (J5) pin 1, then passes through the A10 motherboard to the A2 video processor. The A1A1 host/processor monitors this signal with the analog-to-digital converter in the A2 video processor.

To solve this problem:

1. Check the A8 frequency control;
2. Check the A2 video processor. This error also may occur if the wrong multiplexer channel is enabled on the A2 video processor or if this assembly is out of adjustment.

7028 **Correction DAC**

This error is reported only from the `Analyzer Test` sequence. It indicates the start-frequency correction digital-to-analog converter (DAC) on the A8 frequency control is nonlinear. Testing the linearity of the start-frequency correction DAC requires the A6 YTO phase-lock loop to lock. The start-frequency correction DAC is checked for linearity with the lock and roll offset line. This signal leaves through A8 frequency control (J5) pin 50, then passes through the A10 motherboard to the A2 video processor. A1A1 host/processor monitors this signal with the analog-to-digital converter in the A2 video processor.

To solve this problem:

1. If the HP 70900B local oscillator source phase-locks when set to a 3 GHz CW frequency or a 6.6 GHz CW frequency, the A8 frequency control is faulty.
2. If phase-locking does not occur, refer to “YTO Unlock” under “A6 YTO Phase-Lock Loop/A8 Frequency Control Troubleshooting”.

7029 **Video proc: 0 volt**

This hardware error is reported during a power-up or `Analyzer Test` sequence. It indicates that the analog-to-digital converter (ADC) on the A2 video processor is not calibrated to a 0 V input.

The A1A1 host/processor checks ADC calibration by selecting the grounded multiplexer input (A2 video processor (U3) pin 8) and reading its value with the ADC.

To solve this problem:

1. Refer to "Adjustment 01. Video Processor" in Chapter 6.

7030 **Video proc: 2 volt**

This hardware error is reported during a power-up or `Analyzer Test` sequence. It indicates the analog-to-digital converter (ADC) on the A2 video processor is not calibrated to a 2 V input. The A1A1 host/processor checks ADC calibration by selecting the 2 V input of the multiplexer (A2 video processor (U3)).

To solve this problem:

1. Refer to "Adjustment 01. Video Processor" in Chapter 6.

7031 **Idler is unlocked**

This hardware error is reported from the A4A2 idler lock and occurs when the tune voltage to the idler exceeds its limits.

The signal is sent from A4A2 idler lock (J1) pin 1, through the A11 wiring harness, to the A8 frequency control. The A1A1 host/processor monitors this signal.

To solve this problem:

1. When errors 7019, 7020, and 7021 are also reported from `Analyzer Test`, troubleshoot them first.
2. Refer to "Idler Unlock" under "A4 Idler Phase-Lock Loop Troubleshooting".

7041 **FFS won't tune low**

This hardware error is reported during a power-up or `Analyzer Test` sequence. It occurs when the A7 FRAC'N synthesizer unlocks when tuned to 35 MHz.

To solve this problem:

1. Refer to "A7 FRAC'N Synthesizer Troubleshooting".

7042 **FFS won't tune high**

This hardware error is reported during a power-up or `Analyzer Test` sequence. It occurs when the A7 FRAC'N synthesizer unlocks when tuned to 70 MHz.

To solve this problem:

1. Refer to "A7 FRAC'N Synthesizer Troubleshooting".

7043 **Freq. assembly adjust**

This hardware error is reported only from the `Analyzer Test` sequence. The sweep and binary span digital-to-analog converters (DACs) are turned off and the zero-tune DAC is set to 200 counts (−0.5 V at A8 frequency control (TP1-2) and 4.5 V at A8 frequency control (TP1-1). This signal leaves through A8 frequency control (J5-1) and passes through the A10 motherboard to A2 video processor (J2) pin 25 on the A2 video processor. The A1A1 host/processor reads the signal with the analog-to-digital converter in the A2 video processor. This error occurs when the voltage at A8 frequency control (TP1-1) is greater than ±50 mV from 4.5 V.

To solve this problem:

1. Refer to "Adjustment 17. Frequency Control Voltage References" in Chapter 6, "Adjustment 21. Tune + Span Offset" in Chapter 6, and "Adjustment 01. Video Processor" in Chapter 6.
2. If the error persists, replace the A8 frequency control or A2 video processor.

7044 **YTO tuning range**

This hardware error is reported during a power-up or `Analyzer Test` sequence. It indicates the A6 YTO phase-lock loop has become unlocked at either 3 GHz or 6.6 GHz (CW frequencies).

To solve this problem:

1. Refer to "YTO Unlock" under "A6 YTO Phase-Lock Loop/A8 Frequency Control Troubleshooting".

7047 **RAM failure**

This hardware error indicates a RAM failure.

To solve this problem:

1. Replace the A1A1 host/processor.
2. Replace the A1A2 1/4 MB RAM/ROM.

7048 **FFS won't unlock**

This hardware error occurs when the A1A1 host/processor slews the A7 FRAC'N synthesizer from one rail to another very quickly. It monitors the FFS unlock indicator while it slews, looking for the proper unlock condition.

To solve this problem:

1. Check the A7A2 FFS analog.

7050 **Hardware configuration failure**

This hardware error occurs when the configuration test, run shortly after power-up, fails to determines if the local oscillator source is an HP 70900A local oscillator source or an HP 70900B local oscillator source. The HP 70900B local oscillator source contains circuitry on the A8 frequency control that adds a gain of 5 to the output of the correction DAC. Using this circuit, the configuration test begins by tuning the local oscillator source to a CW frequency of 3.1 GHz with the gain switch in the gain-of-1 position. The correction DAC is loaded with a value that creates a DC offset in the EYO tune voltage. This tune voltage is read by the processor through the A-to-D on the A2 video processor. Next, the gain switch is set to the gain-of-5 position, and the tune voltage again is read by the processor. A "hardware configuration failure" is reported if the tune voltage with the switch in the gain-of-1 position is not stable, or if the tune voltage with the switch in the gain-of-5 position falls outside a gain-of-2-to-10 window.

To solve this problem:

1. If other errors are reported with error 7050, troubleshoot those other errors first, in the order in which they appear.
2. Tune the local oscillator source to a CW of 3.1 GHz, while monitoring the LO output on a spectrum analyzer with a span of about 50 MHz. A "hardware configuration failure" will occur if the LO signal is off frequency, unlocked, or shows noise while acquiring lock.
3. Check the A8 frequency control.

If Series 8000 Error Messages (8000–8999) Occur

Series 8000 errors can be caused by problems in downloaded code.

To solve these problems:

1. Confirm that the error is caused by the HP 70900B local oscillator source. Make sure the error is not caused by a user-defined function or by any other user-input command or program.
2. If down-loaded code is not the source of the error, check the A1A1 host/processor or the A1A2 1/4 MB RAM/ROM.

If Series 9000 Error Messages (9000–9999) Occur

Series 9000 errors can be caused by incorrect information sent to the HP 70900B local oscillator source from other modules in the system.

To solve these problems:

1. Confirm that the error is caused by the HP 70900B local oscillator source. Make sure the error is not caused by a user-defined function or by any other user-input command or program.
2. Check the A1A1 host/processor or the A1A2 1/4 MB RAM/ROM.

A1A1 Host/Processor and A1A2 1/4 MB RAM/ROM Troubleshooting

Make sure that no two modules have the same HP-MSIB address. Duplicate addresses cause the HP-IB to lock up. Install the HP 70900B local oscillator source on an HP 70001-60013 extender module and remove the cover.

Power-Up Sequence Failures

The HP 70900B local oscillator source has failed its power-up sequence when any of the following conditions exist:

- No analyzer display appears when you press (DISPLAY) SELECT INST .
- All front panel LEDs stay on.
- No front panel LEDs are on.
- LEDs other than MEASURE are blinking.

If any of the above conditions exist, check the power supplies for the A1A1 host/processor at the following points:

A1A1 host/processor (J6) pin 48 ..... +5.2 V ±0.1 V
A1A1 host/processor (J6) pin 49 ..... +13.5 V ± 0.2 V

- If these voltages are incorrect, refer to "A3 Power Supply Troubleshooting".
- If the voltages are correct, check the MSIB cable W20.

  To check the cable:

  1. Substitute the backplane interconnect cable (HP part number 5062-1933) from the HP 70900B local oscillator source service kit.
  2. Connect one end of the cable to A1A1 host/processor (J4) and the other end to the extender module.
  3. Connect the interconnect cable's power supply jack to A3 power supply (J4).
  4. Power up the local oscillator source.
  5. If the local oscillator source completes its power-up sequence, replace W20.

Front-Panel Self-Test LED Troubleshooting

If the SELF TEST LED on the front panel of the HP 70900B local oscillator source is on or flashing after power up, it indicates one of the errors listed below.

- If the local oscillator source cannot complete the power-up sequence, replace the A1A2 1/4 MB RAM/ROM.
- If the problem still occurs, replace the A1A1 host/processor.

SELF TEST and IDL LEDs on:

The ROM checksum test has failed. The ACT LED will also be on if more than one error has been detected. Replace the A1A2 1/4 MB RAM/ROM if any of the following conditions are met:

- No other LEDs on
- SRQ on
- TLK on
- TLK and SRQ on
- LSN on

- LSN and SRQ on
- LSN and TLK on
- LSN,TLK, and SRQ on

SELF TEST, IDL, and FFS LEDs on:

The RAM checksum test has failed. The ACT LED will also be on if more than one error has been detected. Replace the A1A2 1/4 MB RAM/ROM if any of the following conditions exist:

- No other LEDs on
- SRQ on
- TLK on
- TLK and SRQ on

SELF TEST, IDL, FFS, and YTO LEDs on:

The interrupt checksum test has failed. The ACT LED will also be on if more than one error has been detected. Replace the A1 if any of the following conditions exist:

- SRQ on
- TLK on
- TLK and SRQ on
- LSN on
- LSN and SRQ on
- LSN and TLK on
- LSN, TLK, and SRQ on

HP-IB Troubleshooting

To troubleshoot the HP-IB:

1. Verify the HP-IB address:
   a. Press (DISPLAY) ADDRESS MAP.
   b. Rotate the RPG knob until the HP 70900B local oscillator source address shows on the map (the ACT LED should light when the address-map cursor encloses the LO module address). Verify that the HP-IB address in the box is the desired address.
   c. If not, change the address, cycle power, and try again.
   d. Verify that the LO SW/MEM switch is in the "MEM" position.
2. If the HP-IB address is correct, check A1S1 (HP-IB enable switch):
   a. Verify that the HP-IB enable switch is in the "ON" position.
   b. If it is not, set it to "ON" and try again.
3. Test the W20 back-plane interconnect cable:
   a. Replace the W20 back-plane interconnect cable with the interconnect cable (HP part number 5062-1933) from the HP 70900B local oscillator source service kit.
   b. Plug the 50-pin interconnect into A1A1 host/processor (J4), then reinstall the A1A1 host/processor; into the HP 70900B local oscillator source.
   c. Connect the interconnect to the extender module and the power supply connection to A3 power supply (J4).
   d. Power up the local oscillator source.
   e. If it now functions normally over HP-IB, replace the W20 back-plane interconnect.
4. If there is still a problem, replace the A1A1 host/processor.

Normal/Test Switch Troubleshooting

CAUTION Setting the NORMAL/TEST switch A1A1 host/processor (S2) to the TEST position, then cycling power will cause all downloaded programs, user-defined keys, contents of the recall registers, and all memory functions in the HP 70900B local oscillator source to be erased.

If the HP 70900B local oscillator source will not complete its power-up sequence and all above methods of isolating the problem have not succeeded:

1. Set the A1A1 host/processor (S2) NORMAL/TEST switch to the TEST position, and cycle the local oscillator source's power.
   - If the local oscillator source still fails the power-up sequence, replace the A1A1 host/processor or A1A2 1/4 MB RAM/ROM.
   - If the local oscillator source passes the sequence, set the switch to the NORMAL position and cycle the power.
   - If the local oscillator source cannot complete the power-up sequence, replace the A1A1 host/processor or A1A2 1/4 MB RAM/ROM.

A3 Power Supply Troubleshooting

Check the two banks of LEDs on the top of the A3 power supply. Power supplies with green LEDs (DS2) are fused by F1 (closest to the back of the local oscillator source). Power supplies with yellow LEDs (DS1) are fused by F2. Both fuses are rated 2 A. All power supplies are distributed to the board assemblies through the A11 wiring harness, except those listed below, which are distributed through the A10 motherboard. The supply for the A9 front panel comes from the A1A1 host/processor through the A10 motherboard.

A1A1 host/processor: +5.2 V, +13.5 V

A2 video processor: +15 V, +13.5 V, +5.2 V, −5.3 V, −13.5 V

A8 frequency control: +15 V, +13.5 V, +5.0 V, −13.5 V

Blown Fuse Troubleshooting

The quickest way to troubleshoot a blown fuse is:

1. Remove the connectors from A3 power supply (J1) and A3 power supply (J2) (A11 wiring harness connectors on top of the A3 power supply). Replace the blown fuse and power up the HP 70900B local oscillator source.
   - If the new fuse does not blow, replace A3 power supply (J1).
   - If the fuse does blow, remove all A11 wiring harness connectors from the top of the A4 Idler Phase-Lock Loop and A7 FRAC'N synthesizer. Then, replace the fuse. Replace the A11 wiring harness connectors one at a time until the fuse blows and indicates the faulty assembly.

CAUTION Be careful not to offset the A11 wiring harness connectors when connecting them to an assembly. Improper connection can damage the local oscillator source.

2. If the fuse did not blow when A3 power supply (J1) was replaced:
   a. Remove all A11 wiring harness connectors from the A6 YTO phase-lock loop
   b. Follow the procedure above for A3 power supply (J2).
3. If the fuse blows again after removing the A3 power supply (J1) and A3 power supply (J2) connectors:
   a. Remove the A1A1 host/processor and power up the HP 70900B local oscillator source.
   b. Then remove the A2 video processor and power up the HP 70900B local oscillator source.
   c. Finally, remove the A8 frequency control and power up the HP 70900B local oscillator source.
   d. If the fuse continues to blow after removing these assemblies, replace the A3 power supply.

Loaded-Down Power Supply Troubleshooting

Use the procedure for blown fuses to troubleshoot individual power supply problems. Valid power supply measurements are listed in Table 4-2. If the power supplies are close to their ranges, it does not necessarily mean that the A3 power supply is faulty. More likely, a supply is loaded down by another assembly.

Table 4-2. A3 Power Supply Measurements

Supply	Measurement Point	Valid Range
−3.25 V	A3 power supply (J1) pin 1	−3.15 V to −3.35 V
−5.0 V	A3 power supply (J1) pin 6	−4.93 V to −5.07 V
−5.3 V	A3 power supply (J1) pin 2	−5.22 V to −5.36 V
−13.5 V	A3 power supply (J1) pin 3	−13.88 V to −13.65 V
−10 V	A3 power supply (J1) pin 4	−9.45 V to −10.45 V
−25 V	A3 power supply (J1) pin 5	−23.49 V to −26.43 V
+5.0 V	A3 power supply (J1) pin 7	+4.95 V to +5.08 V
+5.2 V	A3 power supply (J4) pin 11	+5.1 V to 5.3 V
+13.5 V	A3 power supply (J1) pin 9	+13.30 V to +13.65 V
+15 V	A3 power supply (J1) pin 10	+14.25 V to +15.75 V

A4 Idler Phase-Lock Loop Troubleshooting

Idler Unlock

If an FFS unlock is reported along with an idler unlock, repair the FFS unlock before performing this procedure.

1. Connect an HP 8566B spectrum analyzer to A6A3 idler buffer (J3) idler buffer out. Complete "The State Worksheet", and then verify the power output under the following conditions:

Condition	Power
IDLER is low	−15 to −17 dBm
IDLER is high	−15 to −16 dBm

- If the power measured in step 1 is incorrect, connect an HP 8566B spectrum analyzer to A4A3 idler VCO microcircuit (J2) idler PLL output. Verify the power output under the following conditions:

Condition	Power
IDLER is low	−4 to −14 dBm (harmonics <−11 dBc)
IDLER is high	0 to −10 dBm (harmonics <−9 dBm)

- If the power or harmonics measured in step 2 are incorrect, refer to "A4 Idler Phase-Lock Loop Troubleshooting".
- If the power and harmonics levels are correct, check the power supplies going to A6A3 idler buffer (J2) at A11 wiring harness (P7). (A11 wiring harness (P7) is the A11 wiring harness jack connected to A6A3 idler buffer (J2).)

A11 wiring harness	Power Supply
A11 wiring harness (P7) pin 1 (8 wire from A6A2 YTO lock)	−5 to −12 V
A11 wiring harness (P7) pin 4 (91 wire from A3 power supply)	+5 V ±0.2 V

- If the voltages measured in step 3 are correct, replace the A6A3 idler buffer.
- If the power or harmonics in step 2 are incorrect and the A4A2 idler lock procedure reveals no problem on the A4A2 idler lock, replace the A4A3 idler VCO microcircuit.

Frequency Error

1. Connect an HP 8566B spectrum analyzer to A7A1 FFS phase lock loop (J1) FFS VCO output.
   a. Complete "The State Worksheet".
   b. Verify that the FFS START and FFS STOP frequencies match the results on the worksheet.
   c. Measure the output power.
   - If the power is greater than 0 dBm, refer to "A7 FRAC'N Synthesizer Troubleshooting".
   - If the frequencies and power at A7A1 FFS phase lock loop (J1) are correct, refer to "A4 Idler Phase-Lock Loop Troubleshooting".
2. If the A4A2 idler lock is working properly:
   a. Connect an HP 8566B spectrum analyzer to A4A3 idler VCO microcircuit (J2).
   b. Connect a DVM to A4A2 idler lock (J3).

c. Remove the cable from A4A2 idler lock (J2). The voltage should measure more negative than −23 V.

3. If the voltage is incorrect, replace the A4A2 idler lock. The signal on the HP 8566B spectrum analyzer should measure within the following frequency ranges:

Condition	Frequency
IDLER is low	>3585 MHz
IDLER is high	>5385 MHz

4. Reconnect the cable to A4A2 idler lock (J2), then remove the RF cable from A4A1 300 MHz amplifier (J1). The voltage at A4A2 idler lock (J3) should measure more positive than −2 V.

- If the voltage is incorrect, replace the A4A2 idler lock. The signal on the HP 8566B spectrum analyzer should be within the following frequency ranges:

Condition	Frequency
IDLER is low	<3510 MHz
IDLER is high	<5310 MHz

5. If the frequencies measured in steps 3 and 4 are incorrect, replace the A4A3 idler VCO microcircuit. If the frequencies are correct, reconnect the RF cable to A4A1 300 MHz amplifier (J1).

6. Press (MENU) BW, Swp SINGLE SWEEP to initiate a sweep.

7. If the voltage at A4A2 idler lock (TP2) is between −3 V and −21 V and the HP 70900B local oscillator source front panel IDL LED is on:

a. Measure the voltage at A1A1 host/processor (TP3) LIDLK.
b. If the voltage is a TTL high, troubleshoot the A4A2 idler lock.
c. If the voltage measured is a TTL low, measure the voltage at A1 (J6) pin 41 on the A1A1 host/processor.
d. If the voltage is a TTL low, the A1A1 host/processor or A1A2 1/4 MB RAM/ROM is faulty.
e. If the voltage is a TTL high, follow the LIDLK line through the A10 motherboard to the A8 frequency control to see where the LIDLK changes state.

8. Connect an HP 8566B spectrum analyzer to A4A2 idler lock (TP1) using a 1:1 probe and a DC-blocking capacitor.

a. Check for a signal between 5 MHz and 130 MHz with an amplitude greater than −55 dBm.

- If the signal meets these specifications, the A4A2 idler lock is faulty.
- If the signal falls out of the frequency range or has low amplitude, change the A4A3 idler VCO microcircuit.

A4A1 300 MHz Amplifier Troubleshooting

1. Test the A6A1 100 MHz reference (J1) connection:

a. Connect an HP 436A power meter with an HP 8482A N(m) power sensor to A6A1 100 MHz reference (J1) 300 MHz out.

b. Verify that the power is greater than 0 dBm.

c. Connect an HP 8566B spectrum analyzer to A6A1 100 MHz reference (J1).

- If the harmonics are −25 dBc or greater, refer to "A6 YTO Phase-Lock Loop/A8 Frequency Control Troubleshooting".

- If the harmonics at A6A1 100 MHz reference (J1) are less than −25 dBc:, reconnect the cable to A6A1 100 MHz reference (J1).

2. Test the CALIBRATOR connection:
   a. Connect the power meter to the local oscillator source's front panel CALIBRATOR.
   b. Verify that the power is −10 dBm, ±0.3 dB.
      - If the power is incorrect, adjust or replace the A4A1 300 MHz amplifier.
3. Test the rear panel 300 MHz #1 jack:
   a. Connect the power meter to the local oscillator source's rear panel 300 MHz 1 jack.
   b. Verify that the power is 0 dBm, ±1 dB.
      - If the power out is incorrect, first perform "Adjustment 05. Calibrator Output Amplitude" in Chapter 6, then perform "Adjustment 06. 300 MHz Reference Output Amplitude" in Chapter 6 as described in Chapter 6.
   c. Connect the spectrum analyzer to the jack and measure the harmonics.
      - If the harmonics are −30 dBc or greater, replace the A4A1 300 MHz amplifier.
4. Repeat this procedure for the rear panel 300 MHz #2 jack.
5. Measure the voltage at A4A1 300 MHz amplifier (J2) pin 1 (300 MHz post-filter detector).
   - If the voltage is less than or equal to +0.2 V, replace the A4A1 300 MHz amplifier.
6. Measure the voltage at A4A1 300 MHz amplifier (J2) pin 2 (AGC voltage).
   - If the voltage is greater than or equal to +1.2 V, replace the A4A1 300 MHz amplifier.

Note Component-level repairs should not be attempted on the M block of the schematic for A4A1 300 MHz amplifier. This circuit (doubler 300 MHz to 600 MHz), has components that must be factory adjusted. The A4A1 300 MHz amplifier should be replaced if this circuit is suspect.

7. Measure the voltage at A4A1 300 MHz amplifier (J6) pin 3 600 MHz detector.
   - If the voltage is less than or equal to +1.1 V, replace the A4A1 300 MHz amplifier.

A4A2 Idler Lock Troubleshooting

1. Remove the A7 FRAC'N synthesizer and install it on extender cables.
2. Remove the A4A2 idler lock's cover.
3. To determine if the IDLER STATE is high or low, refer to "The State Worksheet".
4. Measure the voltage at A4A2 idler lock (J1) pin 3.
   - If the IDLER STATE is low, the voltage should be a TTL high.
   - If the IDLER STATE is high, the voltage should be a TTL low.
5. Measure the voltage at A4A2 idler lock (J4).
   - If the IDLER STATE is low, the voltage should be from −3.5 V to −9 V.
   - If the IDLER STATE is high, the voltage should be from −0.5 V to +0.5 V.
6. If the voltage is incorrect, troubleshoot the A4A2 idler lock.

7. Measure the voltage at A4A2 idler lock (J5). For ambient temperatures (20° C to 30° C), the voltage should be +12.0 V ±0.6 V.
   - If the voltage is incorrect, troubleshoot the A4A2 idler lock.
8. Measure the voltage at A4A2 idler lock (J6). If the IDLER STATE is low, the voltage should be from −0.5 V to +0.5 V. If the IDLER STATE is high, the voltage should be from −7.5 V to −9 V.
   - If the voltage is incorrect, troubleshoot the A4A2 idler lock.
9. Measure the voltage at A4A2 idler lock (J8). The voltage should be from +4 V to +5.1 V.
   - If the voltage is incorrect, troubleshoot the A4A2 idler lock.
10. Measure the voltage at A4A2 idler lock (J9). The voltage should be from −9.0 V to −10.1 V.
    - If the voltage is incorrect, troubleshoot the A4A2 idler lock.

Spurious/Sideband/Noise

In the following instructions assume that the frequency and power at the rear panel 300 MHz outputs and at A4A3 idler VCO microcircuit (J2) (A4 idler phase-lock loop output) are correct.

- If the rear panel 300 MHz signals are incorrect, refer to "A4 Idler Phase-Lock Loop Troubleshooting".
- If the A4 idler phase-lock loop output is incorrect, refer to "Idler Unlock" and "Frequency Error" under "A4 Idler Phase-Lock Loop Troubleshooting".

Use this procedure to troubleshoot spurious signals, sidebands, or noise. This section applies if:

- Spurious signals, sidebands, or high-noise conditions are found on the rear panel LO output and at A4A3 idler VCO microcircuit (J2) A4 Idler Phase-Lock Loop output but not at A1 (J1) FFS PLL output.
- Spurious signals, sidebands, or noise conditions are found on the rear panel 300 MHz outputs A4A1 300 MHz amplifier (J4-J5) but not at A6A1 100 MHz reference (J1) A6A1 100 MHz reference 300 MHz output.

1. If spurious, sidebands, or noise are on the A4 idler phase-lock loop output, perform steps 1a and 1b.
   a. Connect an HP 8566B spectrum analyzer to A4A3 idler VCO microcircuit (J2) A4 idler phase-lock loop output. Spurious signals should be less than −71 dBc for offsets below 15 kHz. Spurs beyond the 15 kHz offset fall outside the YTO lock loop's bandwidth and should be less than −60 dBc.
      - If the spurs do not meet these specifications, connect the spectrum analyzer to A1 (J1) FFS PLL output.
      - If the spurs are on the FFS signal, refer to "A7 FRAC'N Synthesizer Troubleshooting".
   b. The phase noise at A4A3 idler VCO microcircuit (J2) should be less than −91 dBc at a 1 kHz offset (measured in a 1 Hz resolution bandwidth). If the phase-noise is not within the this limit, connect the spectrum analyzer to the output of the A1 (J1) FFS PLL. The phase noise should be less than −94 dBc at a 1 kHz offset (measured in a 1 Hz resolution bandwidth).
      - If the phase noise is not within the limit, refer to "A7 FRAC'N Synthesizer Troubleshooting".

Note Phase noise measurements made with an HP 8566B spectrum analyzer are based on the spectrum analyzer's typical noise performance rather than its specified noise performance.

2. If spurious signals, sidebands, or noise are on the rear panel 300 MHz outputs and on the A4 Idler Phase-Lock Loop output (but not on the FFS PLL output), perform steps 2a and 2b.
   a. Connect an HP 8566B spectrum analyzer's RF input, through a 300 MHz up-converter to A4A1 300 MHz amplifier (J5). (Refer to the end of Chapter 7 for information on constructing the up-converter.)
   b. Measure the phase noise at A4A1 300 MHz amplifier (J5). The spurs should be less than −69 dBc and phase noise less than −91 dBc (1 Hz) at a 1 kHz offset.
   c. If the phase noise and spurs measure within these limits, continue with step 5.
   d. If the limits are not met, connect A6A1 100 MHz reference (J1) (300 MHz out) to the up-converter.
      - If the spur and noise performance still do not meet the limits, replace the A6A1 100 MHz reference.
      - If the specifications are met, change or troubleshoot the following assemblies in the order listed:
        - □ A4A3 idler VCO microcircuit
        - □ A4A2 idler lock
        - □ A4A1 300 MHz amplifier

Note The −69 dBc spur limit out of the 300 MHz up-converter is not an HP 70900B local oscillator source performance specification; it is an indication of performance. A spur at this level would produce a spur on the high idler (worst case) at about −71 dBc.

3. The idler PLL produces output in two frequency ranges, low and high. The range in use depends on the LO frequency selected. The preceding steps checked for spurs in the idler range used at that time. The following steps change the LO frequency so that the idler output is switched to the frequency range not yet inspected. You can then check for spurs in this range. If the spurs are not found in this frequency range, replace the A4A3 idler VCO microcircuit.
4. Connect an HP 8566B spectrum analyzer to A4A3 idler VCO microcircuit (J2) and confirm that spurs are present on the idler PLL output. (The HP 70000 Series modular spectrum analyzer system must be in zero span.)
5. Press the following keys on the HP 70000 modular spectrum analyzer:

   (MENU) State More More Show states.

   Write down the LOSTART frequency. (LOSTART should equal LOSTOP.) The idler PLL output changes its frequency range when the LO frequency passes through 4.4375 GHz:

LO Frequency	Idler Frequency Range
≤4.4375 GHz	low (3.530 to 3.565 GHz)
4.4375 GHz	high (5.330 to 5.365 GHz)

6. A change in the analyzer's center frequency produces an equal change in the analyzer's LO and idler PLL frequencies. To change the idler PLL frequency range, press `Freq Center`, then change the center frequency of the analyzer according to the following rules:
   a. Change the center frequency by the amount needed for the LO frequency to pass through the 4.4375 GHz point. For example, if the LO frequency is 5.0 GHz, decrease the analyzer's center frequency more than 625 MHz. (5.0 GHz – 4.375 GHz = 0.625 MHz)
   b. The change in center frequency must be a multiple of 25 MHz. This ensures that the FFS PLL output frequency will not change. In the example in step a, the analyzer frequency could be decreased by 650 MHz.
7. Locate the idler PLL output signal on the HP 8566B spectrum analyzer.
   - If no spurs are present, change the A4A3 idler VCO microcircuit.
   - If the spurs are present in both the low and high frequency ranges, the most likely causes are the A4A2 idler lock or the A4A3 idler VCO microcircuit, (in that order).

A6 YTO Phase-Lock Loop/A8 Frequency Control Troubleshooting

YTO Unlock

The following measurement criteria are for functional values and are not intended as test limits. Test limits are verified by HP Module Verification Software

Note Any idler unlock or FFS unlock should be repaired before troubleshooting the A6 YTO phase-lock loop/A8 frequency control.

Make sure `Analyzer Test` has been run before starting this procedure. To perform the analyzer-test routine, press (MENU) `misc` `MORE` `SERVICE` `ANALYZER TEST` on the system display. Always wait at least 30 seconds after power-up before performing the test.

`Analyzer Test` checks the presence of key reference signals, the ability of the three phase-lock loops to lock at their maximum and minimum points, the linearity of all digital-to-analog converters (DACs), and analog-to-digital converter (ADC) performance.

- If any errors other than YTO unlocks 7012, 7013, 7016, or 7028 are reported, refer to the *HP 70000 Modular Spectrum Analyzer Installation and Verification Manual.*

1. Confirm that correct voltage levels are supplied to A6A1 100 MHz reference, A6A2 YTO lock, A6A3 idler buffer, and A6A4 YTO lock microcircuit on the A11 wiring harness wiring harness connectors.
2. The voltage at A6A1 100 MHz reference (J5) pin 1 should measure from 0.65 V to 0.85 V. This is the 12.5 MHz detector voltage (the 12.5 MHz signal is the YTO PLL's reference).
3. The voltage at A6A1 100 MHz reference (J7) pin 2 should measure from 0.65 V to 0.85 V. This is the 125 kHz detector voltage (the 125 kHz signal is the FFS PLL's reference).
4. The voltage at A6A1 100 MHz reference (J7) pin 3 should measure from 0.5 V to 2.1 V. This is the 50 MHz detector voltage (the 50 MHz signal is the sampler bias level).
5. Tune the analyzer to the settings that cause a YTO PLL unlock and fill in "The State Worksheet".
6. Measure the A6 YTO phase-lock loop/A8 frequency control output power at the rear panel LO jack (A6A4 YTO lock microcircuit (J3)). The power should be $\geq$ 5 dBm but less than 12 dBm. If the power is not within this range, measure the power out of the A6A5 YTO. The power should be 11 dBm $\pm$3 dB.
   - If the power is incorrect, replace the A6A5 YTO.
   - If the power is correct, run "Adjustment 18. YTO Frequency Endpoints" in Chapter 6.
7. If the unlock condition still exists, with the analyzer in zero span, measure the power and frequency of the Idler PLL signal supplied to A6A4 YTO lock microcircuit (J1).
   a. Disconnect A6 YTO phase-lock loop (W18) at A6A4 YTO lock microcircuit (J1).
   b. Measure the signal out of A6 YTO phase-lock loop (W18).

   The correct idler frequency is calculated on "The State Worksheet", filled out at the start of this procedure. The power should be within the limits below.

Idler State	Idler PLL Output Power to A6A4 YTO lock microcircuit (J1)
Low	−15 to −17 dBm

High ..... −15 to −16 dBm

- If the power or frequency values are not correct, refer to "A4 Idler Phase-Lock Loop Troubleshooting".

8. Reconnect A6 YTO phase-lock loop (W18). Monitor A6A2 YTO lock (TP1) with an oscilloscope and a 10:1 probe. When the YTO is locked, there should be a 12.5 MHz rectangular waveform of about 0.8 Vp-p (ECL levels through a capacitor). When the YTO is unlocked, the waveform frequency will be in the 0 to 25 MHz range.
9. If the waveform at A6A2 YTO lock (TP1) has rounded edges:

   a. Write down the spectrum analyzer's span and sweep-time settings.
   b. Set the spectrum analyzer to a 1 GHz span with a sweep time of 20 seconds.
   c. Initiate a sweep on the spectrum analyzer.

10. After the sweep is initiated, the waveform at A6A2 YTO lock (TP1) should be rectangular, sweeping from 0 to 25 MHz.

    - If the waveform is still rounded or missing, place the A8 frequency control on extender cables and remove the A6A2 YTO lock casting cover. (This does not require removing the entire A6 YTO phase-lock loop.)

11. Use an HP 8566B spectrum analyzer and a 1:1 probe with a DC-blocking capacitor to check A6A2 YTO lock (J1-1) for a signal level between −22 dBm and −30 dBm, from 0 to 25 MHz.

    - If the signal is missing or low, check the voltages supplied to the A6A4 YTO lock microcircuit.
    - If the voltages measure correctly, replace A6A4 YTO lock microcircuit.
    - If the signal at A6A2 YTO lock (J1-1) is greater than −22 dBm and the waveform is still rounded, replace the A6A2 YTO lock.

12. Connect an oscilloscope with a 10:1 probe to A6A2 YTO lock (U3) pin 11. Confirm that a 12.5 MHz ECL rectangular wave is present.

    - If no signal is found, refer to "A6 YTO Phase-Lock Loop/A8 Frequency Control Troubleshooting".

13. Set the HP 70000 Series modular spectrum analyzer system to a 100 Hz span. Use an SMB snap-on tee to connect a digital voltmeter (DVM) between A6A2 YTO lock (J6) and (W4). Connect an oscilloscope to A6A2 YTO lock (J5) pin 8. Refer to the "The State Worksheet", for the lock polarity value.
14. Find the values of A6A2 YTO lock (J5) pin 8 and the lock polarity in the following table follow the instructions in the "Action/Status" column.

YTO PLL State

TTL Logic at A6A2 YTO lock (J5) pin 8	Lock Polarity	Action/Status
TTL High	POS	Functioning properly
TTL Low	NEG	Functioning properly
TTL Low	POS	Replace A8 frequency control
TTL High	NEG	Replace A8 frequency control

15. Remove the cable to A6A2 YTO lock (J4) and observe the voltage at A6A2 YTO lock (J6). Find the values of A6A2 YTO lock (J5) pin 8, A6A2 YTO lock (J6), and the lock polarity in the following table, then follow the instructions in the "Action/Status" column.

YTO PLL State (W19 Removed)

TTL Logic at A6A2 YTO lock (J5) pin 8	Lock Polarity	Voltage at A6A2 YTO lock (J6)	Action/Status
TTL High	NEG or POS	+9 V	Functioning properly
TTL High	POS	<+9 V*	Replace A6A2 YTO lock
TTL Low	NEG or POS	<−9 V*	Functioning properly
TTL Low	NEG	>−9 V†	Replace A6A2 YTO lock
*< indicates "more negative than" †> indicates "more positive than"			

16. Replace the cable to A6A2 YTO lock (J4). Remove the power supply connector on top of A6A4 YTO lock microcircuit and observe the voltage at A6A2 YTO lock (J6). Find the values of A6A2 YTO lock (J5) pin 8, A6A2 YTO lock (J6), and the lock polarity in the following table, then follow the instructions in the "Action/Status" column.

YTO PLL State (Power Removed)

TTL Logic at A6A2 YTO lock (J5) pin 8	Lock Polarity	Voltage at A6A2 YTO lock (J6)	Action/Status
TTL High	NEG or POS	<−9 V*	Functioning properly
TTL High	POS	>−9 V†	Replace A6A2 YTO lock
TTL Low	NEG or POS	>+9 V†	Functioning properly
TTL Low	NEG	<+9 V*	Replace A6A2 YTO lock
*< indicates "more negative than" †> indicates "more positive than"			

17. Replace the power supply connector on top of A6A4 YTO lock microcircuit. Install the connector with the red wire toward the rear panel. Initiate an analyzer sweep.
    - If the voltage at A6A2 YTO lock (J6) is between −8 V and +8 V and the message `YTO IS UNLOCKED` is still displayed, check A6A2 YTO lock (J5) pin 6 for a TTL low.
    - If A6A2 YTO lock (J5) pin 6 is not TTL low, replace the A6A2 YTO lock.
18. Connect an HP 3325B synthesized function/sweep generator to A8 frequency control (J1). Set the function generator for a −9 V to +9 V sine wave of 1 kHz.
19. Connect an HP 8566B spectrum analyzer to the rear panel LO jack (A6A4 YTO lock microcircuit (J3)).
    - If the signal excursion is between 30 to 45 MHz, the A6 YTO phase-lock loop/A8 frequency control is probably functioning properly.
    - If the signal excursion at A6A4 YTO lock microcircuit (J3) is outside this range, connect an oscilloscope to A8 frequency control (TP4-4).
20. The signal at A8 frequency control (TP4-4) should be a −9 V to +9 V, ±0.5 V sine wave.
    - If the sine wave is not present, replace A8 frequency control.
    - If it is present but the signal excursion is incorrect, change the A6A5 YTO.
21. Change the function generator frequency to 20 Hz.
    - If the signal excursion on the HP 8566B spectrum analyzer is not between 30 and 45 MHz, replace the A8 frequency control.

A6A1 100 MHz Reference Troubleshooting

Fill out "The State Worksheet" and make sure `Analyzer Test` has been run before starting this procedure. To perform the analyzer-test routine, press (MENU) `misc` `MORE` `SERVICE` `ANALYZER TEST` on the system display. Always wait at least 30 seconds after power-up before performing the test.

`Analyzer Test` checks the presence of key reference signals, the ability of the three phase-lock loops to lock at their maximum and minimum points, the linearity of all digital-to-analog converters (DACs), and analog-to-digital converter (ADC) performance.

- If any errors other than YTO unlocks 7012, 7013, 7016, or 7028 are reported, refer to the *HP 70000 Modular Spectrum Analyzer Installation and Verification Manual.*

1. Set an HP 8566B spectrum analyzer to the following settings:

   Center Frequency ..... 100 MHz
   Span ..... 1 MHz
   Resolution BW ..... 10 kHz

2. Connect the HP 8566B spectrum analyzer to A6A1 100 MHz reference (J1). If the signal measures less than –2 dBm, perform "Adjustment 03. 300 MHz Bandpass Filter" in Chapter 6. After performing this adjustment, the signal at A6A1 100 MHz reference (J1) should be greater than –2 dBm. If the power is still low, check "The State Worksheet" for the value of REF.

   - If REF is INTERNAL, perform step 2a.
   - If REF is EXTERNAL and no external reference is applied, perform step 2b.

   a. Connect a DVM to A6A1 100 MHz reference (J3) pin 5.
      - If the voltage at A6A1 100 MHz reference (J3) pin 5 is a TTL high, replace the A6A1 100 MHz reference.
      - If the voltage at A6A1 100 MHz reference (J3) pin 5 is other than a TTL high, change the A8 frequency control.

   b. Check A6A1 100 MHz reference (J3) pin 2 with a DVM.
      - If the voltage is greater than +25 mV, replace the A6A1 100 MHz reference.
      - If it is less than or equal to +25 mV, replace the A2 video processor.

3. Connect an HP 8663A synthesized signal generator to A6A1 100 MHz reference (J2). Set the generator to 100 MHz at 0 dBm.

4. Set the HP 70000 Series modular spectrum analyzer system to continuous-sweep mode.

   - If the analyzer's extended state shows internal reference, measure A6A1 100 MHz reference (J3) pin 2 with a DVM.
   - If the voltage at pin 2 measures less than or equal to +50 mV, replace the A2 video processor.
   - If the voltage at A6A1 100 MHz reference (J3) pin 3 is less than +50 mV, replace the A6A1 100 MHz reference.

5. Connect an oscilloscope with a 10:1 probe to A6A1 100 MHz reference (J4). Check for an emitter-coupled logic (ECL) signal at 12.5 MHz.

   - If a signal of approximately 0.8 Vpp is not present, change the A6A1 100 MHz reference.

6. Tune the HP 70000 Series modular spectrum analyzer system to a center frequency of 300 MHz and a span of 1 MHz.

7. Use an HP 5316B universal counter to verify that a 125.00 kHz pulse is present at A6A1 100 MHz reference (J6).

- If no pulse is found, check A6A1 100 MHz reference (J7) pin 4 with a DVM.
- If the voltage at A6A4 YTO lock microcircuit (J7) measures −5 V, change the A6A1 100 MHz reference.
- If it measures 0 V, change the A8 frequency control.

8. Tune the spectrum analyzer to a center frequency of 300 MHz and a span of 100 Hz.
9. Use the universal counter to verify that a 124.84 kHz signal is present at A6A1 100 MHz reference (J6).
   - If no signal is found, check A6A1 100 MHz reference (J7) pin 4 with a DVM.
   - If the DVM measures 0 V, change the A6A1 100 MHz reference.
   - If it measures −5 V, change the A8 frequency control.
10. Check A6A1 100 MHz reference (J8):
    a. Place the A1, A3 power supply, and A8 frequency control on extenders.
    b. Remove semirigid cable W17 (A4A3 idler VCO microcircuit (J2) to A6A3 idler buffer (J1)).
    c. Unsnap semirigid cable A6 YTO phase-lock loop (W16) (A6A5 YTO to AT1) from the clips on the A10 motherboard.
    d. Remove the four screws securing the A6 YTO phase-lock loop to the local oscillator source's frame.
    e. Remove the A6A1 100 MHz reference cover.
    f. Connect an oscilloscope with a 10:1 probe to A6A1 100 MHz reference (J8).
       - If a 50 MHz waveform is not present, change the A6A1 100 MHz reference.

Spurious/Sideband

All spurious signals and sidebands are referred to as spurs in this procedure. The troubleshooting procedure is the same for both. This procedure applies to HP 70900B local oscillator sources that have spurs on A6A1 100 MHz reference (J1) (300 MHz output) or spurs on the rear panel LO output, but not on A6A3 idler buffer (J3) idler buffer output.

1. Complete "The State Worksheet" to determine key frequencies and switch positions at the settings where the spurs occur.
   - If the power or frequency of the rear panel LO output jack is incorrect, refer to "YTO Unlock" under "A6 YTO Phase-Lock Loop/A8 Frequency Control Troubleshooting".
   - If the power or frequency of the front panel CALIBRATOR jack or rear panel 300 MHz jacks is incorrect, refer to A6A1 100 MHz reference.
2. Connect an HP 8566B spectrum analyzer to the local oscillator source's rear panel LO output jack (A6A4 YTO lock microcircuit (J3)). Refer to "External Frequency Reference" in Chapter 8 to lock the local oscillator source's reference to the HP 8566B spectrum analyzer.
3. Initiate a sweep on the HP 70000A modular spectrum analyzer to enable the external reference.
4. If the spurs disappear, the internal reference is causing the spurs. Replace the A6A1 100 MHz reference. Leave the external reference connected.
5. If the spurs are not caused by the internal reference and occur in offsets less than 1 kHz, place the HP 70900B local oscillator source on an HP 70001-60013 extender module.
   - If no spurs are present or if they are greatly reduced in amplitude, replace the A8 frequency control.
6. Perform "LO Output Spurious Response Test" in Chapter 7.
   - If the test fails, perform "Adjustment 14. FFS Spurious Responses" in Chapter 6.

- If the spurs at A6A4 YTO lock microcircuit (J3) are 24 kHz sidebands, replace the A6A5 YTO or A8 frequency control.
- If the spurs are 40 kHz sidebands, connect the HP 8566B spectrum analyzer to the idler output (A4A3 idler VCO microcircuit (J2)).
- If 40 kHz spurs of similar amplitude are present on the idler output, replace the A3 power supply.
- If the sideband amplitude is different or if no 40 kHz sideband is found, replace the A6A5 YTO.

7. All spurs should be less than −71 dBc at room temperature.
   - If the spurs are −71 dBc, connect an HP 8566B spectrum analyzer to A6A3 idler buffer (J3) idler buffer output.
   - If the spurs at A6A3 idler buffer (J3) are present, refer to "Spurious/Sideband/Noise" under "A4 Idler Phase-Lock Loop Troubleshooting".
8. If no spurs are present at A6A3 idler buffer (J3), connect the HP 8566B spectrum analyzer to A6A1 100 MHz reference (J4) (12.5 MHz reference output) through a DC-blocking capacitor.
   - If the spurs are at A6A1 100 MHz reference (J4), replace the A6A1 100 MHz reference.
9. If spurs are not found:
   a. Connect A6A1 100 MHz reference (J1) 300 MHz reference output to the input of the 300 MHz up-converter.
   b. Connect the output of the up-converter to the input of the HP 8566B spectrum analyzer. (Instructions for assembling the 300 MHz up-converter are included in Chapter 7.)
   - If the spurs of interest are greater than −69 dBc, change the A6A1 100 MHz reference.
10. If no failed assembly has been found, the most probable causes of the spurs are the A6A5 YTO and the A8 frequency control, in that order.

A7 FRAC'N Synthesizer Troubleshooting

FFS Unlock

Make sure `Analyzer Test` has been run before starting this procedure. To perform the analyzer-test routine, press (MENU) `misc` `MORE` `SERVICE` `ANALYZER TEST` on the system display. Always wait at least 30 seconds after power-up before performing the test.

`Analyzer Test` checks the presence of key reference signals, the ability of the three phase-lock loops to lock at their maximum and minimum points, the linearity of all digital-to-analog converters (DACs), and analog-to-digital converter (ADC) performance.

- If any errors other than YTO unlocks 7012, 7013, 7016, or 7028 are reported, refer to the *HP 70000 Modular Spectrum Analyzer Installation and Verification Manual.*

Tune the HP 70000 analyzer to the settings where any A7 FRAC'N synthesizer unlock occurs. Fill out "The State Worksheet", and troubleshoot the unlock conditions with the following procedure. If the A7A2 FFS analog was replaced, make sure that the SMB cables were correctly reconnected.

1. Connect an HP 5316B universal counter to A6A1 100 MHz reference (J6).
   - If no signal is present, refer to A6A1 100 MHz reference.
2. Connect a DVM to A6A1 100 MHz reference (J7) pin 4. Measure the frequency at A6A1 100 MHz reference (J6) with the universal counter. The signal should be at ECL levels (high ≥ -0.98 V, low ≤ -1.63 V). Table 4-3 shows the correct voltage and frequency values for the "divide" number listed on the state worksheet.
   - If the voltage is incorrect, change the A8 frequency control.
   - If the voltage is correct but the frequency is not, change A6A1 100 MHz reference.

Table 4-3.
Measurements at A6A1 100 MHz Reference (J6) and (J7) Pin 4

Divide Number	A6A1 100 MHz reference (J7) Pin 4	A6A1 100 MHz reference (J6)
÷800	−5 V	125 kHz
÷801	0 V	124.84 kHz

3. Check A7A1 FFS phase lock loop (J1):
   a. Connect an HP 8566B spectrum analyzer to A7A1 FFS phase lock loop (J1) (A7 FFS VCO output).
   b. Connect +10 V from a DC power supply to A7A1 FFS phase lock loop (J3) (FFS VCO tune). The signal frequency should be less than 33.5 MHz, with a power level greater than 0dBm.
   c. Connect −7 V from a DC power supply to A7A1 FFS phase lock loop (J3). The signal frequency should be greater than 70 MHz with a power level greater than 0 dBm.
   - If the power level is low or the frequency extremes cannot be met, change the A7A1 FFS phase lock loop.
4. Reconnect cable W3:
   a. Lay the HP 70900B local oscillator source on its side so the A1A1 host/processor is on the bottom.

b. Remove the three screws securing the A7 FRAC'N synthesizer to the bottom of the local oscillator source.

c. Remove cable W3 (125 kHz reference) from A7A2 FFS analog (J2).

d. Slide the assembly upward about one-half inch, and pull the end with the LED outward.

e. Rotate the assembly 180 degrees so the top of the assembly is against the top cabling of the rest of the local oscillator source.

f. Reconnect cable W3 to A7A2 FFS analog (J2).

5. Check the pulse at ECL levels:

a. Connect an HP 3325B synthesized function/sweep generator to the high-impedance input of an oscilloscope.

b. Set the function generator to a 10 MHz square wave at ECL levels (high ≥ -0.98 V, low ≤ -1.63 V).

c. Connect the function generator to A7A1 FFS phase lock loop (J5).

d. Connect a cable from A6A1 100 MHz reference (J6) to A7A1 FFS phase lock loop (J6) (125 kHz).

e. Connect an oscilloscope to A7A1 FFS phase lock loop (J4).

f. Verify that a pulse at ECL levels is present.

- If a pulse is not found or is at a level other than ECL, replace the A7A1 FFS phase lock loop.
- If the pulse is present, replace the cables to the A7A1 FFS phase lock loop.

6. Check the signal at A7A1 FFS phase lock loop (J7):

a. Remove the cable connected to A7A1 FFS phase lock loop (J3) and place a 50 Ω load on the jack.

b. Connect an oscilloscope, using the 50 Ω impedance setting, to A7A1 FFS phase lock loop (J7).

c. Verify that a signal greater than 50 mVpp is present at A7A1 FFS phase lock loop (J7).

- If the signal is less than or equal to 50 mVpp, replace the A7A1 FFS phase lock loop.
- If the amplitude is above this value, replace the A7A2 FFS analog.

Spurious Signals/Noise

When the A7 FRAC'N synthesizer is the source of spurious signals or noise, troubleshoot with the procedure below.

- If noise is the problem, connect a spectrum analyzer through a DC-blocking capacitor to A6A1 100 MHz reference (J7).
- If the spurious signal or noise is present on the 124.84/125 kHz signal, replace the A6A1 100 MHz reference.

1. If no spurious signal or noise is found, check if the noise increases when the FFS PLL output frequency is closer to 70 MHz than when it is near 45 MHz. For every 1 Hz increase in LO frequency, the FFS PLL output decreases 1 Hz. This process is repeated every 25 MHz.
2. Determine the FFS frequency from "The State Worksheet", and then tune the LO accordingly.

- If the noise does increase, replace the A7A1 FFS phase lock loop.
- If the noise occurs in offsets greater than 3 kHz, the most probable cause is the A7A1 FFS phase lock loop.

3. If the noise occurs in offsets less than 3 kHz:
   a. Connect an HP 8663A synthesized signal generator to the HP 70900B local oscillator source rear panel 100 MHz input.
   b. Set the signal generator to 100 MHz at 0 dBm.
   c. Initiate a sweep on the HP 70900B local oscillator source to enable the external reference.

   - If the noise is gone, replace the A6A1 100 MHz reference.
   - If the noise remains, replace the A7A2 FFS analog.

If You Have Verification Test Failures

These troubleshooting suggestions are listed by verification test number. If the local oscillator source fails a verification test, look up that test in the list and follow the instructions.

Before troubleshooting, always make sure the failure is not caused by the test equipment.

If a previous repair involved removing assemblies, make sure that the connector pins were not bent during replacement.

If Test 01. 300 MHz Reference Output Power and Harmonics Fails

To solve this problem:

1. Perform a calibrator output amplitude adjustment (see Chapter 6).
2. Perform a 300 MHz reference output amplitude adjustment (see Chapter 6).
3. Otherwise, troubleshoot the A4A1 300 MHz amplifier.
4. If necessary, obtain service from Hewlett-Packard. (Refer to "If You Want Hewlett-Packard to Service Your Local Oscillator Source" in Chapter 1.)

If Test 02. LO Output Power and Harmonics Fails

To solve this problem:

1. If the power-out test fails, troubleshoot the A6 YTO phase-lock loop.
2. If the harmonics test fails, replace the A6A5 YTO.
3. If necessary, obtain service from Hewlett-Packard. (Refer to "If You Want Hewlett-Packard to Service Your Local Oscillator Source" in Chapter 1.)

If Test 03. Residual FM (Span >10 MHz) Fails

This test checks the residual FM of the A6A5 YTO and the tuning control of the A8 frequency control in a non-phase-locked condition.

To solve this problem:

1. Check the A6A5 YTO.
2. Check the A8 frequency control.
3. If necessary, obtain service from Hewlett-Packard. (Refer to "If You Want Hewlett-Packard to Service Your Local Oscillator Source" in Chapter 1.)

If Test 04. LO Output Spurious Response Fails

To solve this problem:

1. Perform the low-idler adjustment (see Chapter 6).
2. If necessary, obtain service from Hewlett-Packard. (Refer to "If You Want Hewlett-Packard to Service Your Local Oscillator Source" in Chapter 1.)

If Test 05. LO Display Sidebands Fails

To solve this problem:

1. Replace the A6A5 YTO.
2. If necessary, obtain service from Hewlett-Packard. (Refer to "If You Want Hewlett-Packard to Service Your Local Oscillator Source" in Chapter 1.)

If Test 06. LO 40 kHz Sidebands Fails

To solve this problem:

1. Check the A3 power supply and A6 YTO phase-lock loop housing:
   a. Remove the A1A1 host/processor and install it on board extender cables.
   b. Remove the screws that fasten the A3 power supply to the A6 YTO phase-lock loop housing.
   c. Install the HP 70900B local oscillator source on an HP 70001-60013 extender module.
   d. Tune the local oscillator source to the frequency that failed and monitor the sideband with a spectrum analyzer.
   e. Gently pull the A3 power supply away from the A6 YTO phase-lock loop housing.
   f. If the sideband amplitude changes more than 2 dB, replace the A3 power supply.
2. Troubleshoot the A6A5 YTO or the A8 frequency control.
3. If necessary, obtain service from Hewlett-Packard. (Refer to "If You Want Hewlett-Packard to Service Your Local Oscillator Source" in Chapter 1.)

If Test 07. Reference Oscillator Accuracy Fails

To solve this problem:

1. Perform a calibration output frequency adjustment (see Chapter 6), and retest.
2. Troubleshoot the A6A1 100 MHz reference.
3. If necessary, obtain service from Hewlett-Packard. (Refer to "If You Want Hewlett-Packard to Service Your Local Oscillator Source" in Chapter 1.)

If Test 08. Calibrator Amplitude Accuracy Fails

To solve this problem:

1. Perform a calibrator output amplitude adjustment (see Chapter 6) and retest.
2. Troubleshoot the A4A1 300 MHz amplifier.
3. If necessary, obtain service from Hewlett-Packard. (Refer to "If You Want Hewlett-Packard to Service Your Local Oscillator Source" in Chapter 1.)

If Test 09. 300 MHz Reference Amplitude Accuracy Fails

To solve this problem:

1. If this test fails for power only, perform a calibrator output amplitude adjustment, then perform a 300 MHz reference output amplitude adjustment (see Chapter 6).
2. If the test still fails, or if the harmonics test fails, troubleshoot the A4A1 300 MHz amplifier.
3. If necessary, obtain service from Hewlett-Packard. (Refer to "If You Want Hewlett-Packard to Service Your Local Oscillator Source" in Chapter 1.)

If Test 10. Video Detector Tracking Fails

To solve this problem:

1. Troubleshoot the A2 video processor; make sure it is correctly adjusted.
2. If necessary, obtain service from Hewlett-Packard. (Refer to "If You Want Hewlett-Packard to Service Your Local Oscillator Source" in Chapter 1.)

If Test 11. External Triggering Fails

To solve this problem:

1. Check the A1A1 host/processor.
2. If necessary, obtain service from Hewlett-Packard. (Refer to "If You Want Hewlett-Packard to Service Your Local Oscillator Source" in Chapter 1.)

If Test 12. Video Processor Noise Fails

To solve this problem:

1. Check the A2 video processor.
2. If necessary, obtain service from Hewlett-Packard. (Refer to "If You Want Hewlett-Packard to Service Your Local Oscillator Source" in Chapter 1.)

If Test 13. LO Frequency and Span Accuracy (Span >10 MHz) Fails

1. Run the `Analyzer Test` (refer to Figure 4-2).
2. If no errors are reported, perform a frequency control voltage references adjustment, then a YTO frequency endpoints adjustment (see Chapter 6). Rerun Test 11. External Triggering.
3. Check the A6A5 YTO.
4. Check the A8 frequency control.
5. If necessary, obtain service from Hewlett-Packard. (Refer to "If You Want Hewlett-Packard to Service Your Local Oscillator Source" in Chapter 1.)

If Test 14. LO Span Accuracy (Phase-Locked Spans) Fails

To solve this problem:

1. If no unlocks are reported, check the A7 FRAC'N synthesizer.
2. If unlocks are reported, refer to "If Hardware Error Messages (7000–7999) Occur".
3. If necessary, obtain service from Hewlett-Packard. (Refer to "If You Want Hewlett-Packard to Service Your Local Oscillator Source" in Chapter 1.).

If Test 15. LO Frequency Accuracy (Span $\leq$10 MHz) Fails

To solve this problem:

1. Check the A7 FRAC'N synthesizer.
2. If necessary, obtain service from Hewlett-Packard. (Refer to "If You Want Hewlett-Packard to Service Your Local Oscillator Source" in Chapter 1.)

If Test 16. LO Frequency Error versus Sweep Time Fails

To solve this problem:

1. Perform a sweep offset adjustment (see Chapter 6) and re-run the verification test.
2. Check the A8 frequency control.
3. If necessary, obtain service from Hewlett-Packard. (Refer to "If You Want Hewlett-Packard to Service Your Local Oscillator Source" in Chapter 1.)

If Test 17. Tune + Span Output Accuracy Fails

To solve this problem:

1. Check the A8 frequency control.
2. If necessary, obtain service from Hewlett-Packard. (Refer to "If You Want Hewlett-Packard to Service Your Local Oscillator Source" in Chapter 1.)

If Test 18. SWP Output Accuracy Fails

To solve this problem:

1. Check the A8 frequency control.
2. If necessary, obtain service from Hewlett-Packard. (Refer to "If You Want Hewlett-Packard to Service Your Local Oscillator Source" in Chapter 1.)

If Test 19. HSWP Output Voltage Fails

To solve this problem:

1. The HSWP signal originates on the A1A1 host/processor or on the A1A2 1/4 MB RAM/ROM. Check that the "J" connector is installed properly.
2. Troubleshoot the A1A1 host/processor.
3. If necessary, obtain service from Hewlett-Packard. (Refer to "If You Want Hewlett-Packard to Service Your Local Oscillator Source" in Chapter 1.)

If Test 20. Line Triggering Fails

To solve this problem:

1. Check the A1A1 host/processor.
2. If necessary, obtain service from Hewlett-Packard. (Refer to "If You Want Hewlett-Packard to Service Your Local Oscillator Source" in Chapter 1.)

If Test 21. LED Check Fails

To solve this problem:

1. The A1A1 host/processor (or the A1A2 1/4 MB RAM/ROM) provides power and control for the front panel LEDs with J7 pins 1 through 7 and pins 44 through 50. A TTL high to the front panel assembly turns off the LEDs.
2. If necessary, obtain service from Hewlett-Packard. (Refer to "If You Want Hewlett-Packard to Service Your Local Oscillator Source" in Chapter 1.)

If Test 22. Video Bandwidth Fails

To solve this problem:

1. Check the POS PEAK detector on the A2 video processor.
2. If necessary, obtain service from Hewlett-Packard. (Refer to "If You Want Hewlett-Packard to Service Your Local Oscillator Source" in Chapter 1.)

If Test 23. 300 MHz Reference 40 kHz Sidebands Fails

To solve this problem:

1. The 40 kHz sidebands on the rear panel 300 MHz outputs are affected by the routing of the 300 MHz cables. Cables near the fuses on the A3 power supply are especially susceptible to sidebands. Check that these cables are routed around A6A1 100 MHz reference (J6) and A6A1 100 MHz reference (J7), and away from the A3 power supply.
2. If necessary, obtain service from Hewlett-Packard. (Refer to "If You Want Hewlett-Packard to Service Your Local Oscillator Source" in Chapter 1.)

If Test 24. Calibrator Harmonics Fails

To solve this problem:

1. Install the local oscillator source on an HP 70001-60013 extender module and remove the local oscillator source's cover.
2. Check the 300 MHz at A6A1 100 MHz reference (J1) for greater than 0 dBm power, with harmonics less than −30 dBc.
3. If the power and harmonics are incorrect, check the A6A1 100 MHz reference.
4. If the power and harmonics are correct, replace the A4A1 300 MHz amplifier.
5. If necessary, obtain service from Hewlett-Packard. (Refer to "If You Want Hewlett-Packard to Service Your Local Oscillator Source" in Chapter 1.)

If Test 25. Calibrator Output Impedance Fails

To solve this problem:

1. Install the local oscillator source on an HP 70001-60013 extender module and remove the local oscillator source's cover.
2. Connect the verification test equipment directly to A4A1 300 MHz amplifier (J3), bypassing the cable to the front panel CALIBRATOR jack.
3. If the return loss improves more than 2 dB, replace that cable.
4. If there is no improvement, troubleshoot the A4A1 300 MHz amplifier.
5. If necessary, obtain service from Hewlett-Packard. (Refer to "If You Want Hewlett-Packard to Service Your Local Oscillator Source" in Chapter 1.)

If Test 26. 300 MHz Reference Isolation Fails

To solve this problem:

1. Remove the A4A1 300 MHz amplifier from the A4 idler phase-lock loop casting.
2. Check that the conductive gasket is present in all casting and cover grooves.
3. If the gasket is present, reassemble the local oscillator source and re-run the test.
4. If the test fails again, troubleshoot the A4A1 300 MHz amplifier.
5. If necessary, obtain service from Hewlett-Packard. (Refer to "If You Want Hewlett-Packard to Service Your Local Oscillator Source" in Chapter 1.)

If Test 27. External Reference Fails

To solve this problem:

1. Troubleshoot the A6 YTO phase-lock loop.
2. If the problem is not in the A6 YTO phase-lock loop, it is likely that the reference line is being toggled. Check the A6A1 100 MHz reference.
3. If necessary, obtain service from Hewlett-Packard. (Refer to "If You Want Hewlett-Packard to Service Your Local Oscillator Source" in Chapter 1.)

If Test 28. Reference Oscillator Noise and Stability Fails

To solve this problem:

1. Make sure the local oscillator source has been properly warmed up for at least one hour.
2. Check the 100 MHz crystal on the A6A1 100 MHz reference.
3. If necessary, obtain service from Hewlett-Packard. (Refer to "If You Want Hewlett-Packard to Service Your Local Oscillator Source" in Chapter 1.)

If Test 29. YTO Linearity Fails

To solve this problem:

1. Check the A6A5 YTO.
2. Check the A8 frequency control.
3. If necessary, obtain service from Hewlett-Packard. (Refer to "If You Want Hewlett-Packard to Service Your Local Oscillator Source" in Chapter 1.)

If You Have Adjustment Procedure Failures

These troubleshooting suggestions are listed by module adjustment number. If the local oscillator source fails an adjustment, look up that adjustment in the list and follow the instructions.

Before troubleshooting, always make sure the failure is not caused by the test equipment.

If a previous repair involved removing assemblies, make sure that the connector pins were not bent during replacement.

If Adjustment 01. Video Processor Fails

To solve this problem:

1. Check the A2 video processor.
2. Check the interface between the A2 video processor and the A1A1 host/processor.
3. If necessary, obtain service from Hewlett-Packard. (Refer to "If You Want Hewlett-Packard to Service Your Local Oscillator Source" in Chapter 1.)

If Adjustment 02. 100 MHz Reference/300 MHz Bandpass Filter Fails

To solve this problem:

1. Troubleshoot the A6A1 100 MHz reference.
2. If necessary, obtain service from Hewlett-Packard. (Refer to "If You Want Hewlett-Packard to Service Your Local Oscillator Source" in Chapter 1.)

If Adjustment 03. 300 MHz Bandpass Filter Fails

To solve this problem:

1. Troubleshoot the A4A1 300 MHz amplifier.
2. If necessary, obtain service from Hewlett-Packard. (Refer to "If You Want Hewlett-Packard to Service Your Local Oscillator Source" in Chapter 1.)

If Adjustment 04. Calibrator Output Frequency Fails

To solve this problem:

1. Troubleshoot the A6A1 100 MHz reference. The failure usually is caused by one of the inductors in the assembly's oscillator circuit.
2. Check the oscillator crystal on the A6A1 100 MHz reference.
3. If necessary, obtain service from Hewlett-Packard. (Refer to "If You Want Hewlett-Packard to Service Your Local Oscillator Source" in Chapter 1.)

If Adjustment 05. Calibrator Output Amplitude Fails

To solve this problem:

1. Troubleshoot the A4A1 300 MHz amplifier.
2. If necessary, obtain service from Hewlett-Packard. (Refer to "If You Want Hewlett-Packard to Service Your Local Oscillator Source" in Chapter 1.)

If Adjustment 06. 300 MHz Reference Output Amplitude Fails

To solve this problem:

1. Be sure you have completed the Adjustment 05. Calibrator Output Amplitude before you perform this adjustment.
2. Check the A4A1 300 MHz amplifier.
3. If necessary, obtain service from Hewlett-Packard. (Refer to "If You Want Hewlett-Packard to Service Your Local Oscillator Source" in Chapter 1.)

If Adjustment 07. FFS VCO Fails

To solve this problem:

1. Refer to "FFS Unlock" under "A7 FRAC'N Synthesizer Troubleshooting".
2. If necessary, obtain service from Hewlett-Packard. (Refer to "If You Want Hewlett-Packard to Service Your Local Oscillator Source" in Chapter 1.)

If Adjustment 08. FFS Tune/Comp Coarse Fails

To solve this problem:

1. Check the A7A2 FFS analog if the tune-compensation potentiometer fails to adjust for a 0 V difference.
2. If necessary, obtain service from Hewlett-Packard. (Refer to "If You Want Hewlett-Packard to Service Your Local Oscillator Source" in Chapter 1.)

If Adjustment 09. FFS Reference Null Fails

To solve this problem:

1. Check the A7A2 FFS analog.
2. Although the A7A2 FFS analog is almost always the cause of this adjustment failure, the reference feedthrough is also a function of the tune voltage sent to the A7A1 FFS phase lock loop.
3. If necessary, obtain service from Hewlett-Packard. (Refer to "If You Want Hewlett-Packard to Service Your Local Oscillator Source" in Chapter 1.)

If Adjustment 10. FFS API 1 Fails

To solve this problem:

1. Replace the A7A2 FFS analog.
2. If necessary, obtain service from Hewlett-Packard. (Refer to "If You Want Hewlett-Packard to Service Your Local Oscillator Source" in Chapter 1.)

If Adjustment 11. FFS API 2 Fails

To solve this problem:

1. Replace the A7A2 FFS analog.
2. If necessary, obtain service from Hewlett-Packard. (Refer to "If You Want Hewlett-Packard to Service Your Local Oscillator Source" in Chapter 1.)

If Adjustment 12. FFS API 3 Fails

To solve this problem:

1. Replace the A7A2 FFS analog.
2. If necessary, obtain service from Hewlett-Packard. (Refer to "If You Want Hewlett-Packard to Service Your Local Oscillator Source" in Chapter 1.)

If Adjustment 13. FFS Tune/Comp Fine Fails

To solve this problem:

1. Check the A7A2 FFS analog; it is the usual cause for failure to null spurs.
2. Check the A7A1 FFS phase lock loop. It may cause failure if there are gross nonlinearities in the tuning curve.
3. If necessary, obtain service from Hewlett-Packard. (Refer to "If You Want Hewlett-Packard to Service Your Local Oscillator Source" in Chapter 1.)

If Adjustment 14. FFS Spurious Responses Fails

This test checks the API and tune compensation adjustments at various points across the frequency range of the FFS.

To solve this problem:

1. Troubleshoot the A7A2 FFS analog.
2. If necessary, obtain service from Hewlett-Packard. (Refer to "If You Want Hewlett-Packard to Service Your Local Oscillator Source" in Chapter 1.)

If Adjustment 15. Low Idler Fails

To solve this problem:

1. Refer to "Idler Unlock" under "A4 Idler Phase-Lock Loop Troubleshooting".
2. If necessary, obtain service from Hewlett-Packard. (Refer to "If You Want Hewlett-Packard to Service Your Local Oscillator Source" in Chapter 1.)

If Adjustment 16. Sweep Offset Fails

To solve this problem:

1. Check the integrator on the A8 frequency control. Make sure the jumper used to short the resistor during the adjustment is a good short.

CAUTION When shorting R30, be careful not to ground the case of U29. Grounding the U29 case destroys the device.

---

2. If necessary, obtain service from Hewlett-Packard. (Refer to "If You Want Hewlett-Packard to Service Your Local Oscillator Source" in Chapter 1.)

If Adjustment 17. Frequency Control Voltage References Fails

To solve this problem:

1. Check the A8 frequency control.
2. If the A1A1 host/processor or the A8 frequency control has been removed and reinstalled, make sure no pins on the A5 connector are bent.
3. If necessary, obtain service from Hewlett-Packard. (Refer to "If You Want Hewlett-Packard to Service Your Local Oscillator Source" in Chapter 1.)

If Adjustment 18. YTO Frequency Endpoints Fails

To solve this problem:

1. Troubleshoot the A8 frequency control.
2. Check the signals from the A1A1 host/processor to the A8 frequency control.
3. If the A1A1 host/processor or the A8 frequency control has been removed and reinstalled, make sure no pins on the A5 connector are bent.
4. Check the A6A5 YTO.
5. If necessary, obtain service from Hewlett-Packard. (Refer to "If You Want Hewlett-Packard to Service Your Local Oscillator Source" in Chapter 1.)

If Adjustment 19. FM Gain Fails

To solve this problem:

1. Check that the FM coil on the YTO is not open.
2. Check the A8 frequency control.
3. If necessary, obtain service from Hewlett-Packard. (Refer to "If You Want Hewlett-Packard to Service Your Local Oscillator Source" in Chapter 1.)

If Adjustment 20. Sweep Overshoot Fails

To solve this problem:

1. Troubleshoot the sweep-ramp-generating loop on the A8 frequency control.
2. If necessary, obtain service from Hewlett-Packard. (Refer to "If You Want Hewlett-Packard to Service Your Local Oscillator Source" in Chapter 1.)

If Adjustment 21. Tune + Span Offset Fails

To solve this problem:

1. Troubleshoot the A8 frequency control.
2. If necessary, obtain service from Hewlett-Packard. (Refer to "If You Want Hewlett-Packard to Service Your Local Oscillator Source" in Chapter 1.)

If Adjustment 22. Idler Buffer Fails

To solve this problem:

1. If the spur power cannot be adjusted lower than −72 dBc:
   a. Tune the local oscillator source to 4635 MHz.
   b. Connect an HP 8566B spectrum analyzer to A6A3 idler buffer (J2) (the idler buffer output).
   c. If the spur at 5400 MHz is less than −77 dBc, replace the A6A5 YTO.
   d. If the spur at 5,400 MHz is greater than or equal to −77 dBc, replace the A4A3 idler VCO microcircuit.
2. High phase noise from the A6A5 YTO can cause the spur adjustment program to fail. To ensure that a spur is present:
   a. Tune the HP 8566B spectrum analyzer to the spur frequency.
   b. Increase the span of the spectrum analyzer to 100 Hz.
   c. Verify that a spur is present.
   d. If no spur is found, the probable cause of the noise is the A6A5 YTO.
3. If the program shows spurs with power levels greater than −40 dBc between 5100 MHz to 5600 MHz:
   a. Adjust A6A2 YTO lock (R9) to decrease the voltage at A6A4 YTO lock microcircuit (J2) pin 1 by 0.5 V.
   b. Rerun the adjustment.
   c. Repeat this procedure until the spurs disappear.

If You Have Adjustment Procedure Failures

4. If the spur limit cannot be met, replace the A6A4 YTO lock microcircuit.
5. If necessary, obtain service from Hewlett-Packard. (Refer to "If You Want Hewlett-Packard to Service Your Local Oscillator Source" in Chapter 1.)

Performing Related Adjustments and Verification Tests

After an assembly has been repaired, replaced, or adjusted, there are a set of related adjustments and verification tests that must be performed to ensure proper operation.

Note

- If you decide to perform the servicing yourself, prepare a static-safe work station before you begin any servicing procedures. (Refer to "Preparing a Static-Safe Work Station".)
- If there are both related adjustments and related verification tests listed for a particular assembly, always perform the related adjustments first. You should only perform any related verification tests that are listed after all related adjustments have been performed; performing an adjustment after a verification test has been run, may produce inaccurate results.

A1A1 host/processor

Perform the following related verification tests:

All final tests (Test 01. 300 MHz Reference Output Power and Harmonics through Test 21. LED Check)

A1A2 1/4 MB RAM/ROM

Perform the following related verification tests:

All final tests (Test 01. 300 MHz Reference Output Power and Harmonics through Test 21. LED Check)

A2 video processor

Perform the following related adjustment:

Adjustment 01. Video Processor

Perform the following related verification tests:

All final tests (Test 01. 300 MHz Reference Output Power and Harmonics through Test 21. LED Check)
Test 22. Video Bandwidth

A3 power supply

Perform the following related verification tests:

All final tests (Test 01. 300 MHz Reference Output Power and Harmonics through Test 21. LED Check)
Test 23. 300 MHz Reference 40 kHz Sidebands

Performing Related Adjustments and Verification Tests

A4A1 300 MHz amplifier

Perform the following related adjustments:

Adjustment 03. 300 MHz Bandpass Filter
Adjustment 05. Calibrator Output Amplitude
Adjustment 06. 300 MHz Reference Output Amplitude

Perform the following related verification tests:

All final tests (Test 01. 300 MHz Reference Output Power and Harmonics through Test 21. LED Check)
Test 23. 300 MHz Reference 40 kHz Sidebands
Test 24. Calibrator Harmonics
Test 25. Calibrator Output Impedance
Test 26. 300 MHz Reference Isolation
Test 27. External Reference

A4A2 idler lock

Perform the following related adjustments:

Adjustment 15. Low Idler
Adjustment 22. Idler Buffer

Perform the following related verification tests:

All final tests (Test 01. 300 MHz Reference Output Power and Harmonics through Test 21. LED Check)

A4A3 idler VCO microcircuit

Perform the following related adjustments:

Adjustment 15. Low Idler
Adjustment 22. Idler Buffer

Perform the following related verification tests:

All final tests (Test 01. 300 MHz Reference Output Power and Harmonics through Test 21. LED Check)

A6A1 100 MHz reference

Perform the following related adjustments:

Adjustment 02. 100 MHz Reference/300 MHz Bandpass Filter
Adjustment 04. Calibrator Output Frequency

Perform the following related verification tests:

All final tests (Test 01. 300 MHz Reference Output Power and Harmonics through Test 21. LED Check)
Test 27. External Reference
Test 28. Reference Oscillator Noise and Stability

A6A2 YTO lock

Perform the following related adjustment:

Adjustment 22. Idler Buffer

Perform the following related verification tests:

All final tests (Test 01. 300 MHz Reference Output Power and Harmonics through Test 21. LED Check)

A6A3 idler buffer

Perform the following related adjustment:

Adjustment 22. Idler Buffer

Perform the following related verification tests:

All final tests (Test 01. 300 MHz Reference Output Power and Harmonics through Test 21. LED Check)

A6A4 YTO lock microcircuit

Perform the following related adjustment:

Adjustment 22. Idler Buffer

Perform the following related verification tests:

All final tests (Test 01. 300 MHz Reference Output Power and Harmonics through Test 21. LED Check)

A6A5 YTO

Perform the following related adjustments:

Adjustment 18. YTO Frequency Endpoints
Adjustment 19. FM Gain

Perform the following related verification tests:

All final tests (Test 01. 300 MHz Reference Output Power and Harmonics through Test 21. LED Check)
Test 29. YTO Linearity

A7A1 FFS phase lock loop

Perform the following related adjustments:

Adjustment 07. FFS VCO
Adjustment 08. FFS Tune/Comp Coarse
Adjustment 09. FFS Reference Null
Adjustment 13. FFS Tune/Comp Fine
Adjustment 14. FFS Spurious Responses

Perform the following related verification tests:

All final tests (Test 01. 300 MHz Reference Output Power and Harmonics through Test 21. LED Check)

Performing Related Adjustments and Verification Tests

A7A2 FFS analog

Perform the following related adjustments:

Adjustment 07. FFS VCO
Adjustment 08. FFS Tune/Comp Coarse
Adjustment 09. FFS Reference Null
Adjustment 10. FFS API 1
Adjustment 11. FFS API 2
Adjustment 12. FFS API 3
Adjustment 13. FFS Tune/Comp Fine
Adjustment 14. FFS Spurious Responses

Perform the following related verification tests:

All final tests (Test 01. 300 MHz Reference Output Power and Harmonics through Test 21. LED Check)

A8 frequency control

Perform the following related adjustments:

Adjustment 16. Sweep Offset
Adjustment 17. Frequency Control Voltage References
Adjustment 18. YTO Frequency Endpoints
Adjustment 19. FM Gain
Adjustment 20. Sweep Overshoot
Adjustment 21. Tune + Span Offset

Perform the following related verification tests:

All final tests (Test 01. 300 MHz Reference Output Power and Harmonics through Test 21. LED Check)
Test 29. YTO Linearity

A9 front panel

Perform the following related verification tests:

All final tests (Test 01. 300 MHz Reference Output Power and Harmonics through Test 21. LED Check)
Test 21. LED Check
Test 25. Calibrator Output Impedance

A10 motherboard

Perform the following related verification tests:

All final tests (Test 01. 300 MHz Reference Output Power and Harmonics through Test 21. LED Check)

A11 wiring harness

Perform the following related verification tests:

All final tests (Test 01. 300 MHz Reference Output Power and Harmonics through Test 21. LED Check)
Test 23. 300 MHz Reference 40 kHz Sidebands

W20 MSIB (Hughes connector/flex cable)

Perform the following related verification tests:

All final tests (Test 01. 300 MHz Reference Output Power and Harmonics through Test 21. LED Check)

The State Worksheet

The state worksheet speeds up troubleshooting by providing the status of local oscillator source oscillators, switches, and settings. When returning a local oscillator source or assembly for service, include a completed copy of the state worksheet.

Table 4-4. State Worksheet

State Worksheet
(sheet 1 of 2)

1. Set the spectrum analyzer to the setting(s) that exhibit the problem.
2. On the system display press (MENU) `State` `MORE`, `MORE` `Show States`. Record the LOSTART and LOSTOP frequencies on the following lines. *(Some analyzers require the following alternate keystrokes:* press (MNU), `inst disp`, and `SHOW STATE`).

   LOSTART ..... _____ Hz

   LO STOP ..... _____ Hz

3. Press `EXTEND STATE` and record the values listed in the following lines:

   LOCK POLARITY ..... _____

   FREQ REFERENCE ..... _____

   DIVIDE ..... _____

   IDLER STATE ..... _____

   FFS START ..... _____

4. Subtract the LOSTART frequency from the LOSTOP frequency and record the result below.

   (LOSTOP − LOSTART) ..... _____ MHz

5. If the frequency recorded in step 4 is greater than 10 MHz, the analyzer is in lock-and-roll spans. Calculate the FFS STOP frequency according to the following formula:

   FFS STOP = FFS START

   FFS STOP (lock-and-roll spans) ..... _____ MHz

6. If the frequency recorded in step 4 is less than or equal to 10 MHz, the analyzer is in phase-locked spans. Calculate the FFS STOP frequency according to the following formula:

   FFS STOP = FFS START − (LOSTOP − LOSTART)

   FFS STOP (phased-locked spans) ..... _____ MHz

Table 4-4. State Worksheet (continued)

State Worksheet
(sheet 2 of 2)

7. If the IDLER STATE recorded in step 3 is low, calculate the IDLER START frequency according to the following formula:

   IDLER START = 3600 MHz − FFS START

   IDLER START (low Idler State) ..... _____ MHz

8. If the IDLER STATE recorded in step 3 is high, calculate the IDLER START frequency according to the following formula:

   IDLER START = 5400 MHz − FFS START

   IDLER START (high Idler State) ..... _____ MHz

9. Calculate the IDLER STOP frequency using the following formula:

   IDLER STOP = (IDLER START + FFS STOP − FFS START)

   IDLER STOP ..... _____ MHz

Overall Block Diagram of Local Oscillator Source

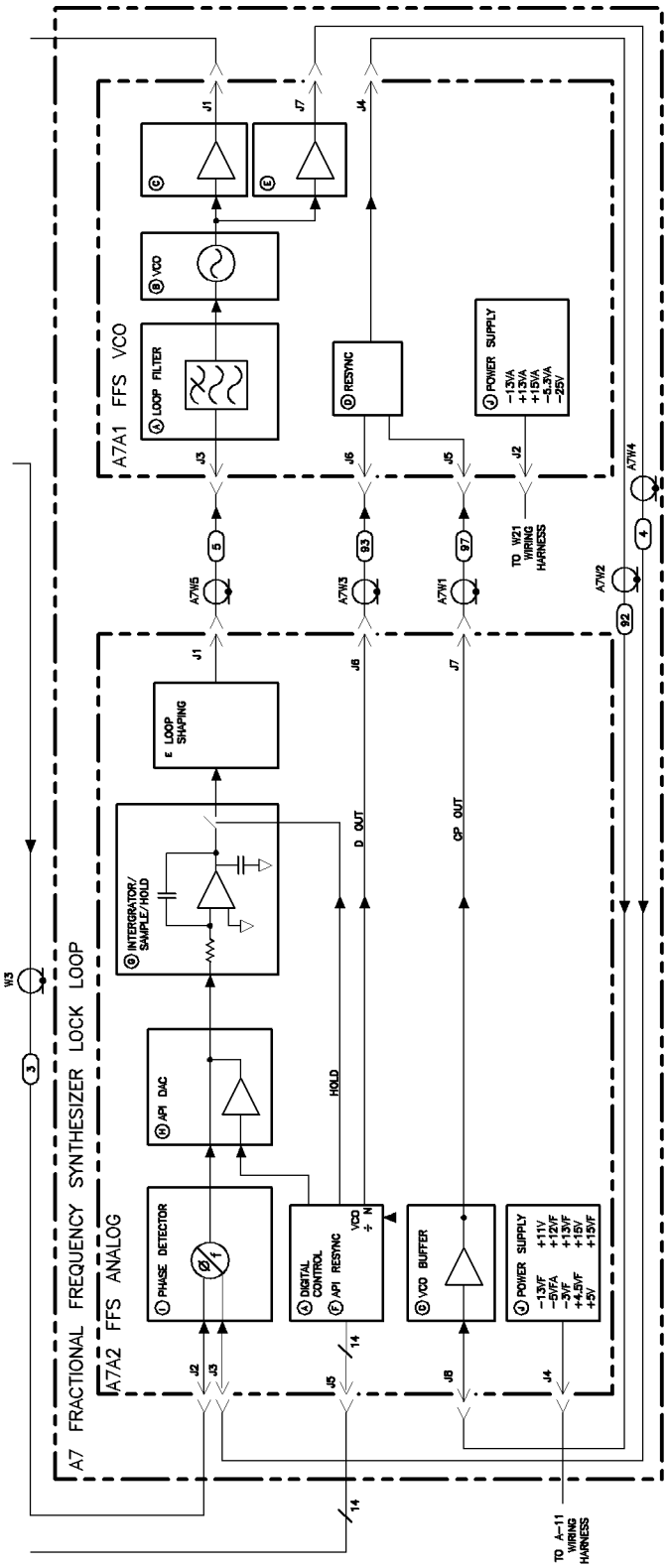

Figure 4-3. Block Diagram of A7 FRAC'N Synthesizer for Serial #3144A01387 and Below

Front page for Foldout Goes Here (This is just a place holder.)

Back page for Foldout Goes Here (This is just a place holder.)

Figure 4-4. Overall Block Diagram of Local Oscillator Source

5

Recommended Test Equipment Tables

Table 5-1. Recommended Test Equipment

Equipment	Recommended Model
Controllers	
Controller	HP 9000 Series 200/300 controller
Signal Sources	
Full microwave source	HP 83640A synthesized sweeper Frequency Response: 2.7–26.5 GHz
Microwave source	HP 83640A synthesized sweeper
Synthesized source	HP 8663A synthesized signal generator or HP 8662A synthesized signal generator or HP 83640A synthesized sweeper
Function generator	HP 3325B synthesized function/sweep generator or HP 3325A synthesized function/sweep generator
Level generator	HP 3335A synthesizer/level generator
External reference	Refer to “External Frequency Reference” in Chapter 8.
Analyzers	
Calibrated spectrum analyzer	HP 8566B spectrum analyzer (upgraded with firmware version 16.7.85 or later)
Spectrum analyzer	HP 8566B spectrum analyzer
Microwave network analyzer	HP 8757C scalar network analyzer
Detector (2 required)	HP 11664E detector
Meters	
Excess noise source	HP 346C broadband noise source
Noise figure meter	HP 8970B noise figure meter
Power meter	HP 437B power meter or HP 436A power meter, or HP 8902A Option 002 measuring receiver
Power sensor	HP 8485A APC-3.5 mm(m) power sensor or HP 8482A N(m) power sensor
Digital multimeter	HP 3478A digital multimeter
Precision digital voltmeter	HP 3456A digital multimeter
Amplifiers	
RF amplifier (optional)	HP 8447A RF amplifier

Table 5-1. Recommended Test Equipment (continued)

Equipment	Recommended Model
HP 70000 Components	
Graphics display	HP 70205A graphics display
	or HP 70206A system graphics display
Mainframe	HP 70001A mainframe
Local oscillator source	HP 70900B local oscillator source
IF section	HP 70902A IF section
	or HP 70903A IF section
	or HP 70911A WB IF section
RF section	HP 70904A RF section
	or HP 70905A RF section
	or HP 70906A RF section
	or HP 70908A RF section
	or HP 70909A RF section
	or HP 70910A RF section
Extender module	HP 70001-60013 extender module
Modified LO module cover	HP 70900-00012
Modified mainframe cover	HP 70001-00038 or HP 70001-00039
Standard Equipment	
Oscilloscope	HP 54503A digitizing oscilloscope
	or HP 54111D digitizing oscilloscope
Oscilloscope Probe	HP 10080A oscilloscope probe
Power supply (0 to 40 V)	HP 6205C dual-output power supply
Attenuators	HP 8491A Option 020 coaxial fixed attenuator
Termination	HP 908A 50Ω N(m) termination
	HP 0960-0055 50Ω SMA(m) termination
Open/Short	HP 85037-60001
Power splitter	HP 11667B power splitter
Directional coupler	HP 778D
Cables	
HP 8120-4921 91 cm (35.8 in) 50Ω APC-3.5 mm(m) to APC-3.5 mm(m) (2 required)	
HP 85680-60093 123 cm (48.4 in) 50Ω BNC(m) to SMB(f) (2 required)	
HP 8120-4921 91 cm (35.8 in) 50Ω APC-3.5 mm(m) to APC-3.5 mm(m) (3 required)	
HP 8120-4921 91 cm (35.8 in) 50Ω APC-3.5 mm(m) to APC-3.5 mm(m)	
HP 8120-1840 122 cm (48 in) 50Ω coaxial BNC(m) to BNC(m)	
HP 85680-60093 123 cm (48.4 in) 50Ω BNC(m) to SMB(f)	
Extender Cables	
HP 70900-60071 50-pin extender cable	
HP 70900-60058 50 pin extender cable (for the A1A1 host/processor)	
HP 70900-60057 30 pin extender cable (for the A3 power supply)	
HP 70900-60061 7 pin extender cable	
HP 70900-60063 9 pin extender cable	
HP 70900-60064 10 pin extender cable	
HP 70900-60065 14 pin extender cable	
HP 70900-60059 50 pin extender cable	

Table 5-1. Recommended Test Equipment (continued)

Equipment	Recommended Model
Specialized Test Equipment	
Sniffer loop	Refer to the "Sniffer Loop Construction Procedure".
300 MHz up-converter	Refer to the "300 MHz Up-Converter Construction Procedure".
20:1 Resistive divider	Refer to the "Resistive Divider Construction Procedure".
HP 71000 system service kit	HP 71000-60002
consisting of:	
A module extender	HP 70001-60013 extender module
A cable puller	HP 5021-6773
A long 8 mm hex-ball driver	HP 8710-1307
or a short 8 mm hex-ball driver	HP 8710-1651
A modified box wrench, 10 inch-pound	HP 8710-1794
A bandpass filter tuning tool	HP 8710-1728
Three BNC (m) to SMB (f) cable assemblies	HP 85680-60093
Seven 309 mm SMB (f) to SMB (f) cables	HP 5061-9021
Two feet of chromeric gasket	HP 8160-0495
A connector pin straightener	HP 5021-7445
Adapters HP 5061-5311 50Ω APC-3.5(f) to APC-3.5(f) HP 1250-1745 50Ω APC-3.5(f) to N(f) (2 required) HP 1250-1744 50Ω APC-3.5(f) to N(m) (3 required) HP 1250-1750 50Ω APC-3.5(m) to N(f) HP 1250-1292 50Ω BNC(f) to alligator clips HP 1251-2277 50Ω BNC(f) to dual banana plug (2 required) HP 1250-0216 50Ω BNC(m) to BNC(m) HP 1250-1250 50Ω N(m) to SMA(f) HP 1250-1476 precision 50Ω N(m) to BNC(f) HP 1250-2015 50Ω SMA(f) to BNC(m) HP 1250-1158 50Ω SMA(f) to SMA(f) HP 1250-1200 50Ω SMA(m) to BNC(f) HP 1250-1249 50Ω right angle SMA(m) to SMA(f) HP 1250-1159 50Ω SMA(m) to SMA(m) HP 1250-0672 50Ω SMB(f) to SMB(f) HP 1250-0672 50Ω SMB(f) to SMB(f) (2 required) HP 1250-0674 50Ω SMB(m) to SMA(f) (2 required) HP 1250-1391 50Ω SMB tee(f) (m) (m)	

300 MHz Up-Converter Construction Procedure

This 300 MHz up-converter is used by some of the module verification tests described in Chapter 7.

Theory of Operation for the 300 MHz Up-Converter

The 300 MHz up-converter converts a 300 MHz input signal to 6 GHz. "Test 23. 300 MHz Reference 40 kHz Sidebands" in Chapter 7 requires the up-converter.

Figure 5-1 illustrates the block diagram of the up-converter. First, the 300 MHz, 0 dBm input signal is attenuated 3 dB to improve matching. Next, the 300 MHz, −3 dBm signal is amplified 40 dB using a low-noise amplifier. The noise figure of this amplifier is approximately 3.5 dB. The step-recovery diode (SRD) generates frequency harmonics. The 20th harmonic of the 300 MHz signal (that is, 6 GHz) is filtered, resulting in a 6 GHz output. The isolator suppresses signals reflecting off the input of the bandpass filter. Without the isolator, these reflected signals could mix in the SRD and generate spurious signals that are passed through to the output.

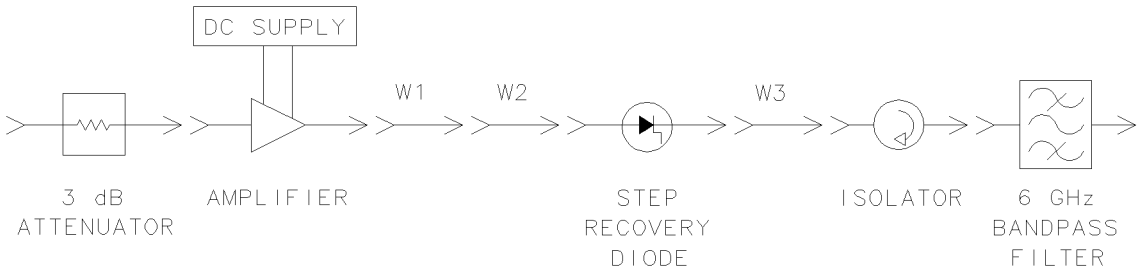

Figure 5-1. 300 MHz Up-Converter Block Diagram

Specifications

Input frequency	300 MHz ±10.5 MHz
Input power	0 dBm ±1 dB
Output frequency	20 × input frequency, normally 6 GHz
Conversion loss	7 dB Maximum
Power supply requirements	+24 V ±5% at 550 mA

Component Specifications

Table 5-2. Components for the 300 MHz Up-Converter

3 dB Attenuator	Operating frequency:	300 MHz ±10 MHz
Amplifier	Operating Frequency:	300 MHz ±10 MHz
	Gain:	40 dB to 43 dB
	Noise figure:	<4 dB
	1 dB gain compression:	33 dBm
Step Recovery Diode	Operating frequency:	300 MHz ±10 MHz
	Output comb frequency:	>6 GHz
	Power capability:	>1 W
Isolator	Frequency:	6 GHz ±200 MHz
	Insertion loss:	<1 dB
	Reverse isolation:	>15 dB
	Power capability:	>0.5 W
Bandpass Filter	Center frequency:	6 GHz
	Stop band attenuation:	>70 dB
Power Supply	Voltage:	+24 V
	Current:	550 mA

300 MHz Up-Converter Assembly

Table 5-3 lists the components used in the up-converter.

1. Assemble the components as shown in Figure 5-2.
2. Connect the positive lead of the power supply to the feedthrough filter on the amplifier.
3. Connect the ground lead to the standoff on the amplifier. Set the power supply to +24 Vdc.

The linear amplifier, Q-Bit Corporation part number QB-442, is available from:

Allis Associates
(408) 252-2883

The bandpass filter, Lark Engineering part number 3B-6000-180-6BA, is available from:

Stout Associates
(714) 242-1233

Table 5-3. 300 MHz Up-Converter Parts List

Part Description	Quantity	Model/Part Number
3 dB Fixed attenuator	1	HP 8493A Option 003
10 MHz to 400 MHz linear amplifier	1	See "300 MHz Up-Converter Assembly"
Step recovery diode	1	HP 33003A
Isolator	1	HP 0955-0204
6 GHz bandpass filter	1	See "300 MHz Up-Converter Assembly"
DC power supply (+24 V, 550 mA)	1	HP 6277B[1]
Semirigid coaxial cable (W1)	1	HP 85660-20073
SMA (m) to SMA (m) Adapter (W2)	1	HP 1250-1159 50Ω SMA(m) to SMA(m)
SMA(f) to SMA(f) Adapter (W3)	1	HP 1250-1158 50Ω SMA(f) to SMA(f)

1 The HP 6277B could be replaced with any one of the following: HP 6206B, HP 6200B, HP 6114A, HP 6289A, HP 6255A, HP 6291A, HP 6115A, or HP 6228B

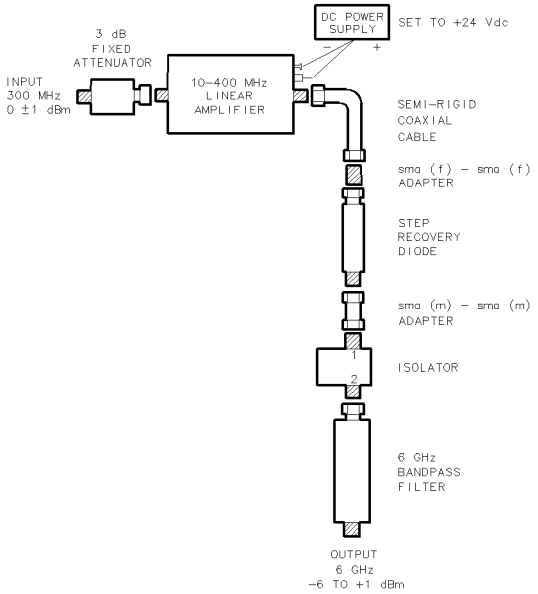

Figure 5-2. 300 MHz Up-Converter Assembly Diagram

Up-Converter Performance Verification

The critical parameters for this electronic tool are its conversion loss and noise floor. See Figure 5-3 for the power levels through the RF chain.

Conversion Loss Verification

1. Connect an HP 8662A synthesized signal generator or HP 8663A synthesized signal generator to the input.
2. Set the HP 8662A synthesized signal generator or HP 8663A synthesized signal generator controls as follows:

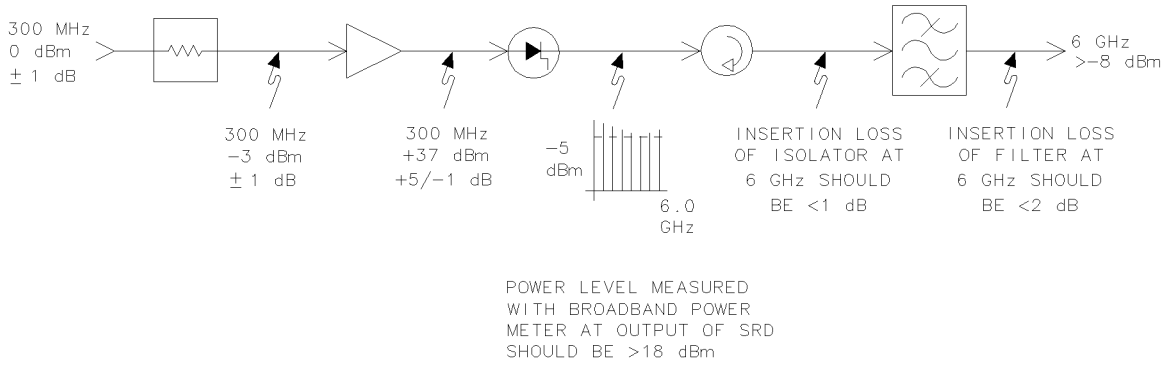

Figure 5-3. Power Levels through RF Chain

Frequency ..... 300 MHz
Power ..... 0 dBm

3. Connect an HP 8566B spectrum analyzer to the up-converter output.
4. Set the HP 8566B spectrum analyzer controls as follows:

Frequency ..... 6 GHz
Span ..... 1 MHz
Reference Level ..... 10 dBm

5. Activate the marker peak function; the marker should read greater than −7 dBm.

Noise Floor Verification

The critical test limit for the 300 MHz phase noise test is the 10 kHz offset, which must measure −1.5 dBc or lower. When the 300 MHz signal is multiplied up to 6 GHz (that is, multiplied times 20) the phase noise increases 26 dB. Allowing for this 26 dB change and the 2 dB guard band in the 300 MHz phase noise test, the noise floor at 6 GHz +200 kHz must measure 111 dBm normalized to a 1 Hz bandwidth.

1. To measure the noise floor at 200 kHz offset from 6 GHz, connect the HP 8662A synthesized signal generator or HP 8663A synthesized signal generator to the input.
2. Set the HP 8662A synthesized signal generator or 8663A controls as follows:

Frequency ..... 300 MHz
Span ..... 0 Hz

3. Connect the HP 8566B spectrum analyzer to the up-converter output.
4. Set the HP 8566B spectrum analyzer controls as follows:

Frequency	6 GHz
Span	450 kHz
Reference Level	20 dBm
Video Bandwidth	300 Hz
Marker	200 kHz from the 6 GHz signal

5. Start the noise measurement routine by pressing Shift M on the HP 8566B spectrum analyzer. This gives the marker amplitude reading normalized to a 1 Hz bandwidth. This amplitude should measure less than −111 dBm.

Sniffer Loop Construction Procedure

This sniffer loop is used by some of the module verification tests described in Chapter 7.

Theory of Operation

The sniffer loop is used to measure the 24 kHz signal radiated from the HP 70205A graphics display, the 25 kHz signal radiated from the HP 70004A color display, and the 40 kHz signal radiated from the HP 70001A mainframe power supply.

Sniffer Loop Assembly

Table 5-4 lists the components used in the sniffer loop assembly. Wrap the wire in a circle 2 inches in diameter, solder the wire to the J1 BNC connector, and attach a lock washer and hex nut. Refer to the assembly diagram in Figure 5-4.

Table 5-4. Sniffer Loop Assembly Parts List

Description	Quantity	HP Part Number
22 Gauge Wire	3 ft	8150-0005
J1, BNC (f)	1	1250-0212
MP1, Hex nut	1	2950-0001
MP2, Lock washer	1	2190-0016
MP3, Solder lug	1	0360-1190

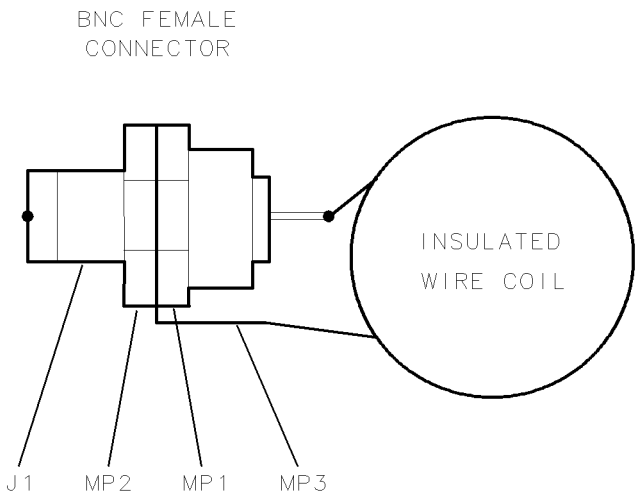

Figure 5-4. Sniffer Loop Assembly Diagram

Resistive Divider Construction Procedure

Theory of Operation of the Resistive Divider

The resistive divider is used to attenuate 40 Vdc down to 2 Vdc. Adjustment 01. Video Processor requires a 0 to 2 V input with the sensitivity of the 40 Vdc power supply. See Figure 5-5 for the 20:1 resistive divider schematic diagram and Table 5-5 for a list of required parts.

Resistive Divider Assembly

Solder J1 and J2 connectors together, back to back. Solder the capacitors and resistors to the connectors. See Figure 5-6.

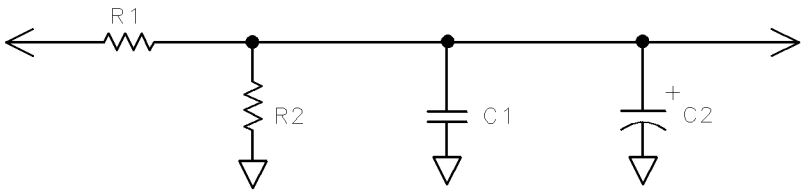

Figure 5-5. Resistive Divider Schematic Diagram

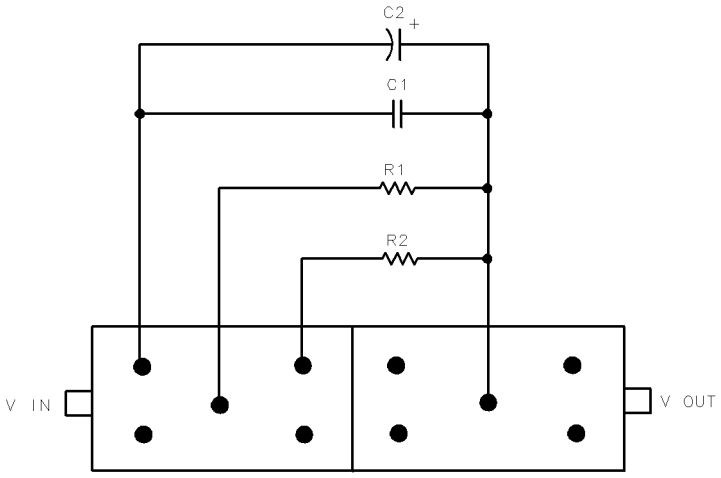

Figure 5-6. Resistive Divider Assembly Diagram

Table 5-5. Resistive Divider Parts

Description	Qty	HP Part Number
J1, J2 Connectors	2	1250-0543
C1, .01 μf Capacitor	1	0160-4554
C2, 6.8 μf Capacitor	1	0180-0116
R1, 680Ω 3 W Resistor	1	0811-1088
R2, 147Ω 0.5 W Resistor	1	0698-3400

6

Adjustment Procedures

This chapter contains the setups for all adjustment procedures that are used to optimize module performance when assemblies are changed, repaired, or adjusted. All of the setups described in this chapter are automated. These automated setups require a controller and are run with software that is described in Chapter 2.

A procedure is considered an adjustment when the cover plate of a module must be removed to perform a repair or an adjustment. A procedure is also considered an adjustment when a module is replaced.

Conversely, a procedure is considered a test when checks are performed on a module and cover plates and modules are not removed from a system.

Before You Begin

Before performing any adjustments, allow the local oscillator source to warm up for 30 minutes without external reference connections.

Extender Cable Installation

CAUTION To avoid blowing the mainframe line fuse or any module fuse, set the mainframe line power switch to *off* before connecting or disconnecting any module service extender cable.

Verification Software

The adjustment procedures are performed using the HP Module Verification Software. The software controls the test equipment and prompts the user to adjust the appropriate components manually. For information on using the software, refer to Chapter 2.

Deciding Which Adjustment Procedure To Use

To decide which adjustment procedure to use, refer to "Performing Related Adjustments and Verification Tests" in Chapter 4; this table lists the adjustments and verification tests that should be performed after an assembly has been repaired, replaced, or adjusted.

Adjustable Components

Table 6-1 lists all adjustable components in the HP 70900B local oscillator source. For each component, this table lists the associated adjustment procedure and a description of the procedure.

Test Equipment, Tools and Calibration

Table 6-2 lists the equipment used in each adjustment procedure. Table 5-1 lists recommended equipment by type. Any equipment that satisfies the critical specifications given in Table 5-1 may be substituted for the preferred test equipment. However, the HP Module Verification Software contains instrument drivers only for the equipment listed in this table. Any additional drivers must be written by the user.

Many of the procedures require either a spectrum analyzer or a calibrated spectrum analyzer. Although a calibrated spectrum analyzer can be used for all these procedures, the analyzer's HP-IB address can be listed only once in the software's equipment menu. If the procedure selected requires a spectrum analyzer instead of a calibrated spectrum analyzer, access the software's equipment menu. Delete the HP-IB address entry for the calibrated spectrum analyzer, then enter this address next to the spectrum analyzer entry.

Test Equipment Construction

Some of the adjustment procedures require a 20:1 resistive divider. The procedure for constructing this divider is found at the end of this chapter. Refer to Table 6-2 for tests requiring this equipment.

Adjustment Tools

For adjustments requiring a nonmetallic tuning tool, use an HP 8170-0033 fiber tuning tool Never try to force an adjustment control in the module. This is critical when adjusting slug-tuned inductors and variable capacitors.

HP-IB Connections

When the Hewlett-Packard Interface Bus (HP-IB) symbol appears on an adjustment setup diagram, the controller and instruments (such as sources, analyzers, and counters) need to be linked together via HP-IB.

External Frequency Reference

Table 6-2 lists the adjustment procedures that require an external frequency reference. During these procedures, instruments such as sources, analyzers, counters, and the DUT need to be connected to the same frequency standard. Refer to "External Frequency Reference" in Chapter 8 for information on external-reference requirements and generation.

HP 8566B Spectrum Analyzer Calibration

A calibration procedure for the HP 8566B spectrum analyzer is activated whenever a test requiring a calibrated spectrum analyzer is selected. Refer to Table 6-2 for a list of procedures requiring a calibrated spectrum analyzer. Refer to "Spectrum Analyzer/RF Cable Calibration" in Chapter 8 for an explanation of the calibration procedure. After calibration, the software will return to the selected adjustment procedure.

Note Since the RF cable and calibrated HP 8566B spectrum analyzer are calibrated together, use them together throughout the adjustment procedures.

Table 6-1. Adjustable Components

Reference Designator	Adjustment Name	Adjustment Number	Description
A2 video processor (R8)	POS PEAK	1	Adjusts positive peak detector offset voltage.
A2 video processor (R26)	NEG PEAK	1	Adjusts negative peak detector offset voltage.
A2 video processor (R52)	REFERENCE ADJ	1	Adjusts a reference voltage for the A2 video processor ADC.
A2 video processor (R56)	GAIN	1	Adjusts gain of the A2 video processor ADC.
A2 video processor (R58)	OFFSET	1	Adjusts the A2 video processor ADC offset voltage.
A4A1 300 MHz amplifier (C2)		3	Adjusts 300 MHz bandpass filter.
A4A1 300 MHz amplifier (C3)		3	Adjusts 300 MHz bandpass filter.
A4A1 300 MHz amplifier (C4)		3	Adjusts 300 MHz bandpass filter.
A4A1 300 MHz amplifier (C5)		3	Adjusts 300 MHz bandpass filter.
A4A1 300 MHz amplifier (C36)		6	Adjusts rear panel 300 MHz Reference 2 amplitude.
A4A1 300 MHz amplifier (C41)		6	Adjusts rear panel 300 MHz Reference 1 amplitude.
A4A1 300 MHz amplifier (R40)	OUTPUT 1 LVL SET	6	Adjusts rear panel 300 MHz Reference 2 amplitude.
A4A1 300 MHz amplifier (R53)	OUTPUT 2 LVL SET	6	Adjusts rear panel 300 MHz Reference 1 amplitude.
A4A1 300 MHz amplifier (R84)	CAL LEVEL ADJUST	5	Adjusts calibrator amplitude.
A4A2 idler lock (R16)	LOW IDLER ADJ	15	Adjusts power of low idler frequency relative to high idler frequency.
A6A1 100 MHz reference (C5)		2	Adjusts 300 MHz bandpass filter.
A6A1 100 MHz reference (C6)		2	Adjusts 300 MHz bandpass filter.
A6A1 100 MHz reference (C7)		2	Adjusts 300 MHz bandpass filter.
A6A1 100 MHz reference (C9)	REF FREQ ADJUST	2, 4	Adjusts 100 MHz reference oscillator frequency.
A6A1 100 MHz reference (C19)		2	Adjusts 300 MHz bandpass filter.
A6A1 100 MHz reference (C20)		2	Adjusts 100 MHz oscillator power level.
A6A2 YTO lock (R27)	IBUF	22	Adjusts bias voltage to the A4A3 idler VCO microcircuit.
A7A1 FFS phase lock loop (L7)	VCO	7	Adjusts the FFS VCO frequency range.
A7A2 FFS analog (C36)		9	Nulls out the 125/124.844 kHz reference feedthrough.
A7A2 FFS analog (R22)	TUNE COMP	8, 13	Nulls A7 FRAC'N synthesizer spurious responses.
A7A2 FFS analog (R23)	API 1	10	Nulls A7 FRAC'N synthesizer spurious responses.
A7A2 FFS analog (R25)	API 2	11	Nulls A7 FRAC'N synthesizer spurious responses.
A7A2 FFS analog (R27)	API 3	12	Nulls A7 FRAC'N synthesizer spurious responses.
A8 frequency control (R100)	FINE TUNE GAIN	17	Adjusts positive dc reference voltage.
A8 frequency control (R101)	SPAN GAIN	17	Adjusts negative dc reference voltage.
A8 frequency control (R102)	FM GAIN	19	Adjusts FM coil current.
A8 frequency control (R104)	3 GHz FINE	18	Adjusts YTO start frequency.
A8 frequency control (R105)	LPF	20	Adjusts the sweep-ramp overshoot.
A8 frequency control (R106)	TUNE/SPAN OFFSET	21	Adjusts the tune-span dc offset voltage.
A8 frequency control (R107)	6 GHz CALIB	18	Adjusts YTO stop frequency.
A8 frequency control (R108)		16	Adjusts the sweep ramp offset voltage.

Table 6-2. Equipment Required for Adjustments

Adjustment Procedures	Calibrated Spectrum Analyzer, HP 8566B spectrum analyzer	Extender Cables, HP 70900 LO Service Kit	Extender Module, HP 71000 system service kit	External Reference, HP 70310A precision frequency reference	Microwave Source, HP 8340A/B synthesized sweeper	Modified Covers, HP 70000/70900B Service Kits	Oscilloscope, HP 54503A digitizing oscilloscope	Power Meter, HP 436A power meter	Power Sensor, HP 8485A APC-3.5 mm(m) power sensor	Power Supply, HP 6205C dual-output power supply	Precision Digital Voltmeter, HP 3456A digital multimeter	Spectrum Analyzer, HP 8566B spectrum analyzer	Synth. Source, HP 8663A synthesized signal generator	20:1 Resistive Divider	DIP Clip-16 pin	Mini-Grabber	Notes
Video Processor 1						•				•	•			•			
Reference 2	•	•	•	•	•		•				•						
Reference 3	•	•	•									•					
Reference 4			•	•								•	•				
Reference 5			•					•	•								
Reference 6	•	•	•														
FFS 7		•	•	•							•	•					
FFS 8			•								•				•		
FFS 9			•	•								•					
FFS 10		•	•	•							•	•				•	
FFS 11		•	•	•							•	•				•	
FFS 12		•	•	•							•	•				•	
FFS 13	•	•	•								•					•	
FFS 14	•	•	•								•					•	
Idler 15			•	•									•				
Freq. Control 16			•								•						
Freq. Control 17			•								•						
Freq. Control 18			•	•								•					
Freq. Control 19			•									•					
Freq. Control 20			•				•										
Freq. Control 21			•								•	•					
YTO Lock Loop 22	•		•	•	•			•	•								

Types of Adjustments

There are six different types of adjustments that can be performed on the HP 70900B local oscillator source.

Video Processor Adjustment

This adjustment consists of the following semi-automated procedure performed using the HP Module Verification Software.

- "Adjustment 01. Video Processor"

The assemblies that are affected by this adjustment are:

- A2 video processor

Reference Adjustments

Five semi-automated procedures adjust the following reference functions:

- 100 MHz internal oscillator
- 300 MHz bandpass filters
- 300 MHz signal amplitude

The adjustments are performed in the following order:

- "Adjustment 02. 100 MHz Reference/300 MHz Bandpass Filter"
- "Adjustment 03. 300 MHz Bandpass Filter"
- "Adjustment 04. Calibrator Output Frequency"
- "Adjustment 05. Calibrator Output Amplitude"
- "Adjustment 06. 300 MHz Reference Output Amplitude"

The assemblies that are affected by this adjustment are:

- A4A1 300 MHz amplifier
- A6A1 100 MHz reference

Fractional Frequency Synthesizer Adjustments

The Fractional Frequency Synthesizer (FFS) adjustments consist of the eight procedures listed below. If the A7A1 FFS phase lock loop is replaced or repaired, only adjustments 7, 8, 9, and 14 need be performed. If the A7A2 FFS analog is replaced or repaired, perform all of the following FFS adjustments.

- "Adjustment 07. FFS VCO"
- "Adjustment 08. FFS Tune/Comp Coarse"
- "Adjustment 09. FFS Reference Null"
- "Adjustment 10. FFS API 1"
- "Adjustment 11. FFS API 2"
- "Adjustment 12. FFS API 3"
- "Adjustment 13. FFS Tune/Comp Fine"
- "Adjustment 14. FFS Spurious Responses"

The assemblies that are affected by this adjustment are:

- A7A1 FFS phase lock loop
- A7A2 FFS analog

Idler Assembly Adjustment

The idler phase-lock loop produces the following two signals: 3.6 GHz and 5.4 GHz. The low idler adjustment sets the overall and relative power levels of these two signals.

- "Adjustment 15. Low Idler"

The assemblies that are affected by this adjustment are:

- A4A2 idler lock

Frequency Control Adjustments

This adjustment consists of six semi-automated procedures that are performed using the HP Module Verification Software. The adjustments must be run in the following order:

- "Adjustment 16. Sweep Offset"
- "Adjustment 17. Frequency Control Voltage References"
- "Adjustment 18. YTO Frequency Endpoints"
- "Adjustment 19. FM Gain"
- "Adjustment 20. Sweep Overshoot"
- "Adjustment 21. Tune + Span Offset"

The assemblies that are affected by this adjustment are:

- A8 frequency control

YTO Lock Loop Adjustment

The idler buffer adjustment sets the gain of the A4A3 idler VCO microcircuit and sets the power level of the low idler.

- "Adjustment 22. Idler Buffer"

The assemblies that are affected by this adjustment are:

- A4A2 idler lock
- A6A2 YTO lock

Adjustment 01. Video Processor

Note The video processor adjustments are very heat sensitive. The modified LO module cover allows access to the A2 video processor adjustments, while keeping the heat flow stable throughout the instrument.

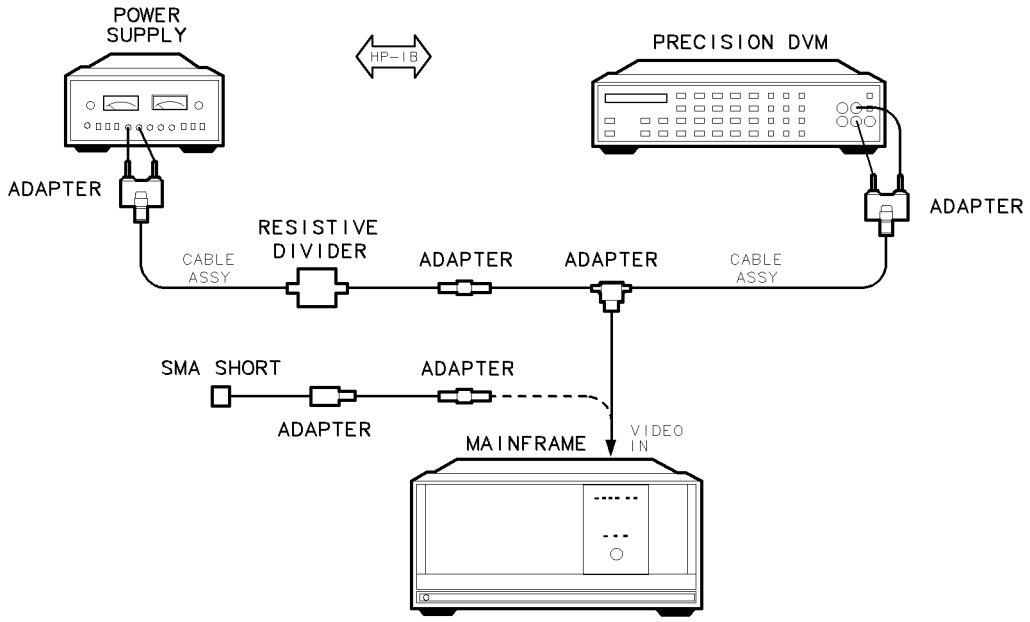

Figure 6-1. Equipment Setup for Adjustment 01. Video Processor

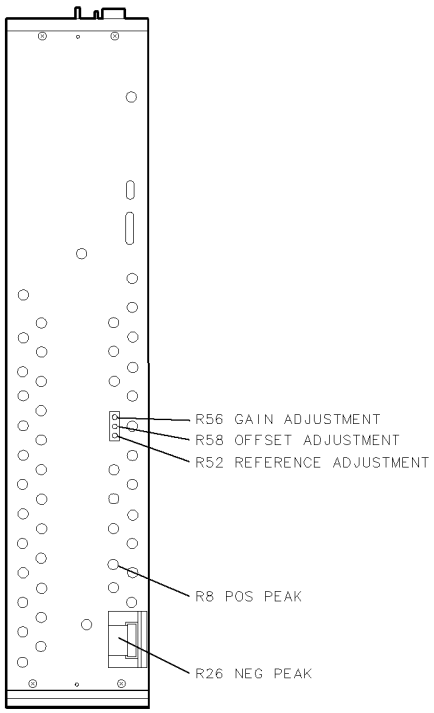

Figure 6-2. Locations for Adjustment 01. Video Processor

Test Equipment	Preferred Model Numbers
Precision digital voltmeter	HP 3456A digital multimeter
Power supply (0 to 40 V)	HP 6205C dual-output power supply
Modified mainframe cover	70001-00038 or 70001-00039
Modified LO module cover	70900-00012
20:1 Resistive divider	Refer to the "Resistive Divider Construction Procedure" in Chapter 5.
Adapter	HP 1250-0674 50Ω SMB(m) to SMA(f)
Adapter	HP 1250-0672 50Ω SMB(f) to SMB(f)
Adapter	HP 1250-1391 50Ω SMB tee(f) (m) (m)
Adapter *(2 required)*	HP 1251-2277 50Ω BNC(f) to dual banana plug
Cable *(2 required)*	HP 85680-60093 123 cm (48.4 in) 50Ω BNC(m) to SMB(f)
Terminator	HP 0960-0055 50Ω SMA(m) termination

The power supply and 20:1 resistive divider provide 2 Vdc with high sensitivity to the HP 70900B local oscillator source rear panel VIDEO jack. A digital voltmeter (DVM) monitors this voltage into the VIDEO jack while the video processor adjustment is performed. This procedure adjusts the offset and gain of the analog-to-digital converter (ADC), adjusts the offsets of both the positive-peak detector and negative-peak detector circuits, and adjusts the +2 V reference used to calibrate the ADC.

During the test, the user is prompted to adjust a potentiometer to a "number of counts" value. This value is displayed on the computer. The "number of counts" is the value of the decimal bit from the analog-to-digital converter on the A2 video processor. The program converts this value to a voltage level with the following equation:

Adjustment 01. Video Processor

$V = (Counts/1850)(0.0216)$

Where:
40 counts corresponds to 0 V
3740 counts corresponds to +2 V

1. Install the modified LO module cover on the HP 70900B local oscillator source. Place the local oscillator source into an HP 70001A mainframe that has the modified mainframe cover attached.

Note The test equipment must be allowed to warm up for 30 minutes before proceeding with this adjustment.

---

2. Connect the power supply to the 20:1 resistive divider, as illustrated in Figure 6-1. Connect the other end of the divider to the SMB tee adapter, then connect this adapter to one side of the tee. Connect the precision DVM to the other side of the tee, and connect the HP 70900B local oscillator source rear panel video jack to the third connector on the tee. Turn on the power supply. Do not allow the power supply to exceed 40 V. Turn on the mainframe.
3. After the 30 minute warm-up time, run the video processor adjustment test from the LO module verification software.
4. Set the power supply for a DVM reading of 1.99975 V. Follow the prompts provided by the program to make setup changes and potentiometer adjustments.
5. Refer to Figure 6-2 for the location of the adjustments. The adjustments are made in the following order:
   a. Adjust A2 video processor (R58) OFFSET ADJUSTMENT with 0 V supplied to the rear panel VIDEO jack.
   b. Adjust A2 video processor (R56) GAIN ADJUSTMENT with 1.99975 V supplied to the rear panel VIDEO jack.
   c. Repeat steps 5a and 5b until the measurements are in tolerance.
   d. Adjust A2 video processor (R8) POS PEAK with 1.99975 V supplied to the rear panel VIDEO jack.
   e. Remove A1W14 and adjust A2 video processor (R26) NEG PEAK with 1.99975 V supplied to the rear panel VIDEO jack.
   f. Adjust A2 video processor (R52) REFERENCE ADJUSTMENT.
6. The program measures the adjustment of A2 video processor (R8) POS PEAK and A2 video processor (R26) NEG PEAK with 0 and 1.99975 V supplied to the rear panel VIDEO jack, respectively. The adjustment of R52 and R58 is also checked. The program prompts the user to make any additional adjustments.

Adjustment 02. 100 MHz Reference/300 MHz Bandpass Filter

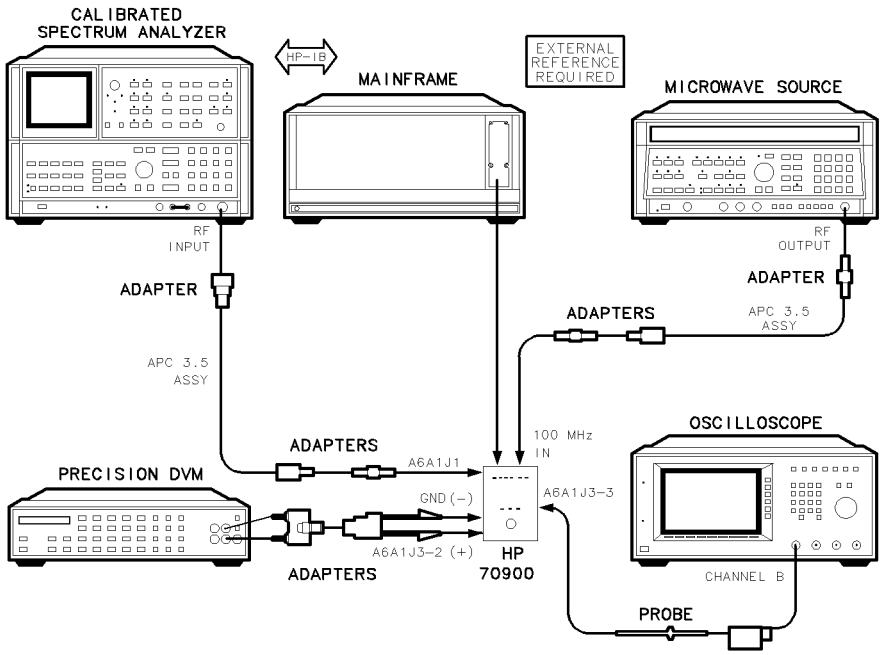

Figure 6-3.
Equipment Setup for Adjustment 02. 100 MHz Reference/300 MHz Bandpass Filter

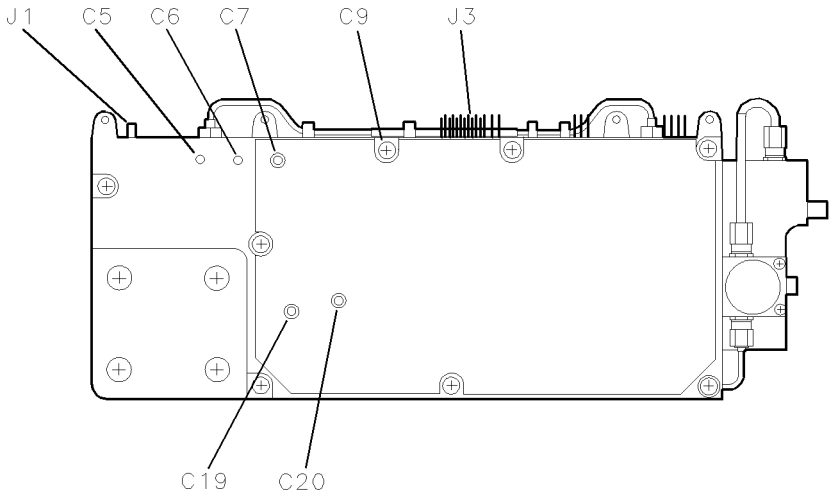

Figure 6-4. Locations for Adjustment 02. 100 MHz Reference/300 MHz Bandpass Filter

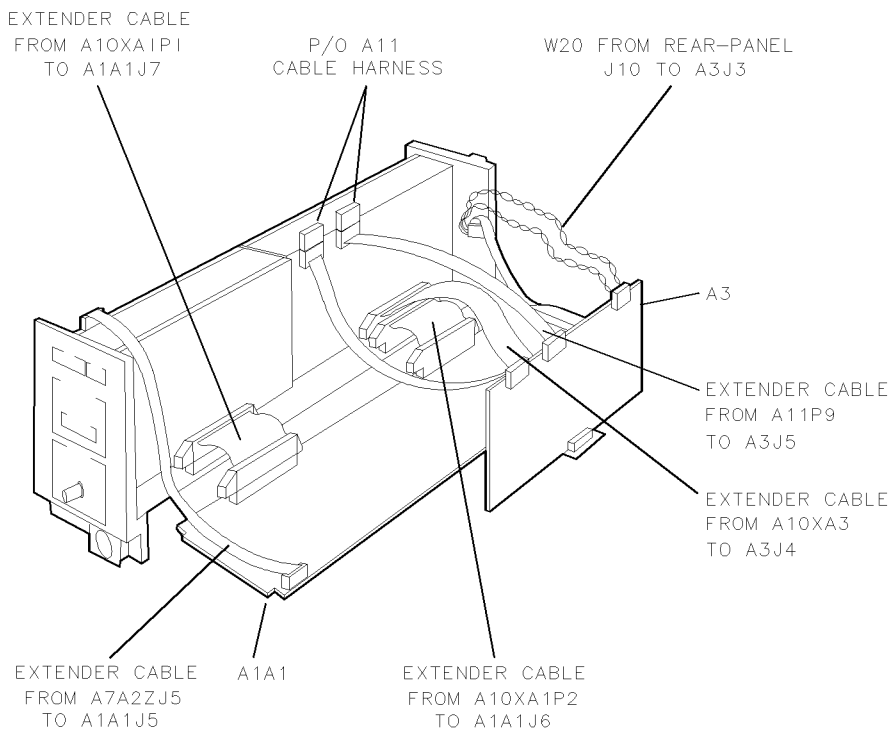

Figure 6-5. Placing A1A1 Host/Processor and A3 Power Supply on Extender Cables

Test Equipment	**Preferred Model Numbers**
Calibrated spectrum analyzer	HP 8566B spectrum analyzer
Precision digital voltmeter	HP 3456A digital multimeter
Microwave source	HP 8340A synthesized sweeper
Oscilloscope	HP 54503A digitizing oscilloscope
Oscilloscope probe	HP 10080A oscilloscope probe
Extender module	HP 70001-60013 extender module
External reference	Refer to "External Frequency Reference" in Chapter 8.
Adapter	HP 5061-5311 50Ω APC-3.5(f) to APC-3.5(f)
Adapter *(2 required)*	HP 1250-0674 50Ω SMB(m) to SMA(f)
Adapter *(2 required)*	HP 1250-0672 50Ω SMB(f) to SMB(f)
Adapter	HP 1250-1744 50Ω APC-3.5(f) to N(m)
Adapter	HP 1250-1292 50Ω BNC(f) to alligator clips
Adapter	HP 1251-2277 50Ω BNC(f) to dual banana plug
Cable *(2 required)*	HP 8120-4921 91 cm (35.8 in) 50Ω APC-3.5 mm(m) to APC-3.5 mm(m)
Cable	HP 8120-1840 122 cm (48 in) 50Ω coaxial BNC(m) to BNC(m)
Extender cable	HP 70900-60063 9 pin extender cable
Extender cable	HP 70900-60064 10 pin extender cable
Extender cable	HP 70900-60065 14 pin extender cable
Extender cable (A3 power supply)	HP 70900-60057 30 pin extender cable
Extender cable (A1A1 host/processor)	HP 70900-60058 50 pin extender cable

This procedure adjusts the bandwidth of the 300 MHz bandpass filter in the A6A1 100 MHz reference. The power level and frequency of the 100 MHz oscillator are also adjusted.

The adjustments for this procedure are located just behind the A3 power supply. Both the A1A1 host/processor and the A3 power supply must be removed, then electrically reconnected to the LO module using extender cables from the HP 70900 LO Service Kit.

1. Set the mainframe line switch to off.
2. Remove the A1A1 host/processor and A3 power supply. (Refer to "A1A1 Host/Processor" in Chapter 9 and "A3 Power Supply" in Chapter 9 replacement procedures described in Chapter 9.) Cables from the HP 70900 LO Service Kit will be used to electrically connect these assemblies to the module. See Figure 6-5.
3. Connect the 50-pin back-plane interconnect cable to J4 on the A1A1 host/processor.
4. Connect the two A1A1 host/processor extender cables (HP 70900-60058 50 pin extender cable) from the A10 motherboard to the two 50-pin connectors, J6 and J7, located at the bottom of the A1A1 host/processor.
5. Connect the (HP 70900-60065 14 pin extender cable) from A7A2 FFS analog (J5) to A1A1 host/processor (J5).

Note It is not necessary to connect the four-wire cable assembly to A1A1 host/processor (J3).

6. Lay the A1A1 host/processor flat. The side with the components must face up.
7. Connect the power supply ribbon cable assembly (HP 70900-60057 30 pin extender cable) from the A10 motherboard to the A3 power supply (J4) connector.
8. Connect the HP 70900-60064 10 pin extender cable from the 10-pin connector on W21 to A3 power supply (J1). Connect the HP 70900-60063 9 pin extender cable from the nine-pin connector on W21 to A3 power supply (J2).

CAUTION The 9-pin and 10-pin extender cables are not keyed. To prevent installing one end of a cable in reverse, confirm that the black wire on the cable connects to the same pin number on both jacks.

9. Connect the four-pin cable assembly to A3 power supply (J3). This cable supplies power to the A3 power supply. If an extender cable is needed, use a five-pin extender cable. Make sure the cables connect the correct pins.

CAUTION Before turning the mainframe power on, make sure no components of the A1A1 host/processor or A3 power supply come into contact with anything conductive.

10. Connect the test equipment as shown in Figure 6-3. Figure 6-4 illustrates the test points and adjustment locations on the A6A1 100 MHz reference. Connect the spectrum analyzer to A6A1 100 MHz reference (J1). Connect the positive DVM lead to A6A1 100 MHz reference (J3-2) and the negative lead to the chassis. Connect the oscilloscope probe to A6A1 100 MHz reference (J3-3) and the probe's ground lead to the chassis. Connect the synthesized source to the local oscillator source's rear panel 100 MHz jack. (This jack is electrically connected to A6A1 100 MHz reference (J2) through W9.)

Note Some assembly test points are grouped on common connectors. An example is A6A1 100 MHz reference (J3) pins 2 and 3. Test point one is oriented toward the front of the module.

11. Set the mainframe line switch to on.
12. Run Adjustment 02. 100 MHz Reference/300 MHz Bandpass Filter from the HP Module Verification Software.

13. The precision DVM monitors the power level of the external-reference oscillator. The oscilloscope monitors the power level of the 100 MHz internal-reference oscillator. The calibrated spectrum analyzer monitors the 300 MHz output from the A6A1 100 MHz reference.
14. A6A1 100 MHz reference (C20) is adjusted to peak the oscilloscope display for maximum internal oscillator power. Set the oscilloscope to the following settings:

Oscilloscope Function	**Setting**
Volts/Div (displayed sensitivity)	200 mV
Second/Div	2.00 μs
Trigger	Internal
Coupling	dc

15. The calibrated spectrum analyzer displays the output from the 300 MHz bandpass filter. With the HP 70900B local oscillator source set to external-reference mode, adjust A6A1 100 MHz reference (C6, C7, C5, and C19) to peak the displayed output.
16. The 100 MHz internal oscillator frequency must be within 1 kHz of the external oscillator frequency. The difference between the two frequencies appears on the spectrum analyzer display. If this limit is not met, adjust A6A1 100 MHz reference (C9) to correct the internal oscillator frequency.
17. The HP 70900B local oscillator source is set to external reference. The microwave source sweeps from 96 to 104 MHz while the spectrum analyzer measures the A6A1 100 MHz reference's 300 MHz output. The 3 dB points of the 300 MHz bandpass filter are determined and compared to test limits.
18. The HP 70900B local oscillator source is set to internal reference and the assembly's output is measured and compared to test limits.

Adjustment 03. 300 MHz Bandpass Filter

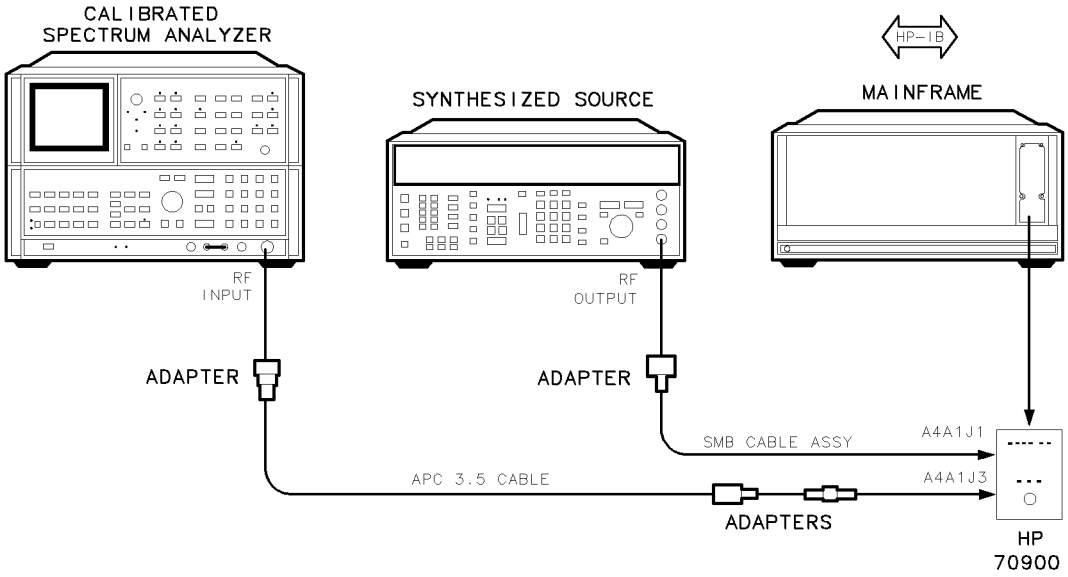

Figure 6-6. Equipment Setup for Adjustment 03. 300 MHz Bandpass Filter

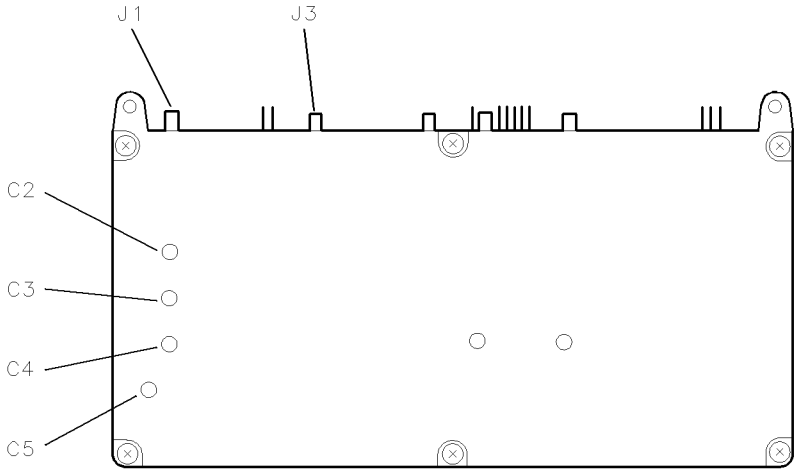

Figure 6-7. Locations for Adjustment 03. 300 MHz Bandpass Filter

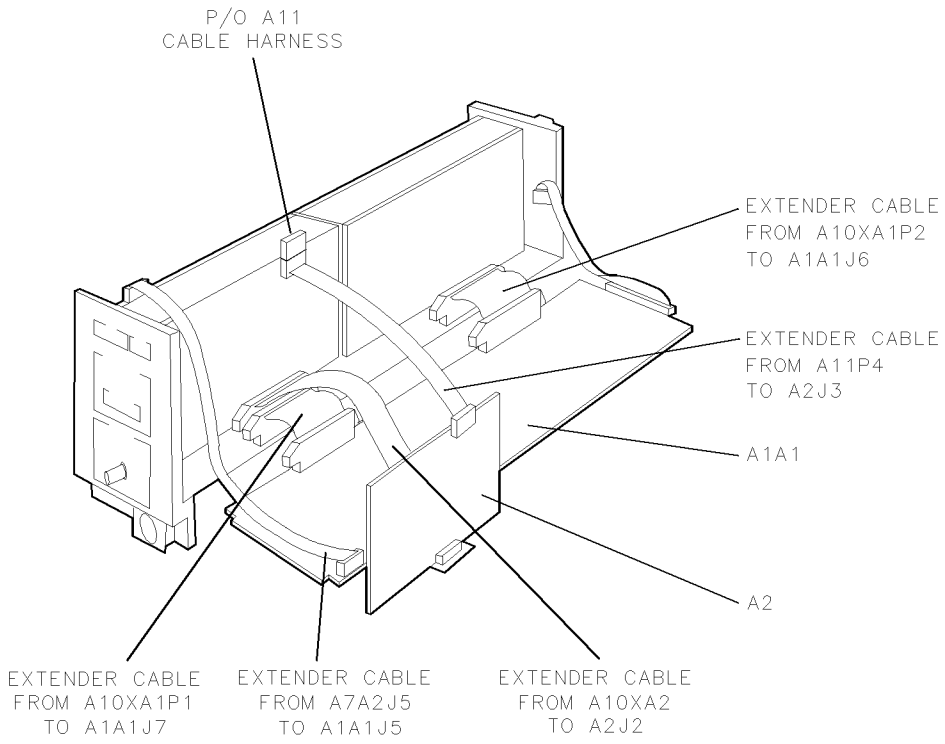

Figure 6-8. Placing A1A1 Host/Processor and A2 Video Processor on Extender Cables

Test Equipment	**Preferred Model Numbers**
Calibrated spectrum analyzer	HP 8566B spectrum analyzer
Synthesized source	HP 8663A synthesized signal generator
Extender module	HP 70001-60013 extender module
Adapter	HP 1250-0674 50Ω SMB(m) to SMA(f)
Adapter	HP 1250-0672 50Ω SMB(f) to SMB(f)
Adapter	HP 1250-1744 50Ω APC-3.5(f) to N(m)
Adapter	HP 1250-1476 precision 50Ω N(m) to BNC(f)
Cable	HP 8120-4921 91 cm (35.8 in) 50Ω APC-3.5 mm(m) to APC-3.5 mm(m)
Cable	HP 85680-60093 123 cm (48.4 in) 50Ω BNC(m) to SMB(f)
Extender cable	HP 70900-60061 7 pin extender cable
Extender cable	HP 70900-60065 14 pin extender cable
Extender cable	HP 70900-60059 50 pin extender cable
Extender cable (A1A1 host/processor)	HP 70900-60058 50 pin extender cable
Extender cable	HP 70900-60071 50-pin extender cable

The 300 MHz bandpass filter on the A4A1 300 MHz amplifier is adjusted with this procedure.

The A4A1 300 MHz amplifier adjustments are located just behind the A2 video processor. Both the A1A1 host/processor and A2 video processor must be removed, and then electrically reconnected to the HP 70900B local oscillator source using extender cables from the HP 70900 LO Service Kit.

1. Set the mainframe line switch to off.

2. Remove the A1A1 host/processor and A2 video processor. Refer to Chapter 9. These assemblies must be electrically reconnected to the module as illustrated in Figure 6-8.
3. Connect two cables, HP 70900-60058 50 pin extender cable from the A10 motherboard to the two 50-pin connectors, J6 and J7, located at the bottom of the A1A1 host/processor.
4. Connect the HP 70900-60065 14 pin extender cable from A7A2 FFS analog (J5) to A1J5. It is not necessary to connect the four-wire cable assembly to A1 (J3).
5. Connect the 50-pin extender cable (70900-60071) from A2 video processor (J2) to the A10 motherboard. Connect the HP 70900-60061 7 pin extender cable from A11 wiring harness to A2 video processor (J3). It is not necessary to connect W6 to A2 video processor (J1).

CAUTION

- The 9-pin and 10-pin extender cables are not keyed. To prevent installing one end of a cable in reverse, confirm that the black wire on the cable connects to the same pin number on both jacks.
- Before turning the mainframe power on, make sure no components of the A1A1 host/processor or A2 video processor come into contact with anything conductive.

6. Connect the equipment as shown in Figure 6-6. Refer to Figure 6-7 for the location of A4A1 300 MHz amplifier (J1) and (J3).
7. Set the mainframe line switch to on.
8. Run Adjustment 03. 300 MHz Bandpass Filter from the HP Module Verification Software.
9. Components A4A1 300 MHz amplifier (C3, C4, C2, and C5) are adjusted for maximum output power as displayed on the spectrum analyzer. The adjustments are made at spectrum analyzer settings of 10 dB/div and 5 dB/div.

Note

"Adjustment 06. 300 MHz Reference Output Amplitude" requires that the A1A1 host/processor and A2 video processor be placed on the same extender cables used in this test. If "Adjustment 06. 300 MHz Reference Output Amplitude" is to be performed, leave A1A1 host/processor and A2 video processor on the extender cables during "Adjustment 04. Calibrator Output Frequency" and "Adjustment 05. Calibrator Output Amplitude".

Adjustment 04. Calibrator Output Frequency

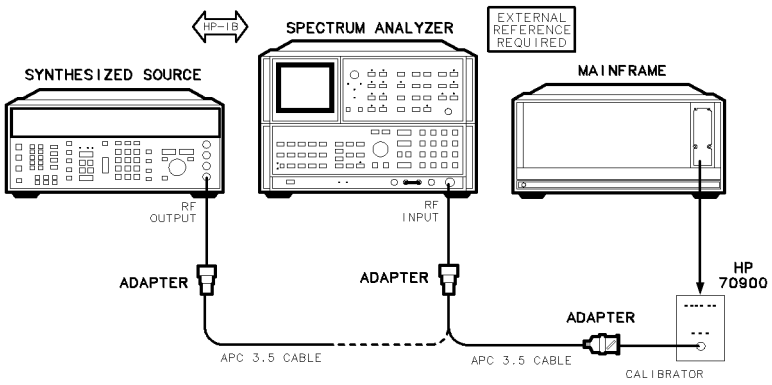

Figure 6-9. Equipment Setup for Adjustment 04. Calibrator Output Frequency

Test Equipment	**Preferred Model Numbers**
Spectrum analyzer	HP 8566B spectrum analyzer
Synthesized source	HP 8663A synthesized signal generator
Extender module	HP 70001-60013 extender module
External reference	Refer to "External Frequency Reference" in Chapter 8.
Adapter	HP 1250-2015 50Ω SMA(f) to BNC(m)
Adapter	HP 1250-1744 50Ω APC-3.5(f) to N(m)
Cable	HP 8120-4921 91 cm (35.8 in) 50Ω APC-3.5 mm(m) to APC-3.5 mm(m)

The 100 MHz internal reference-oscillator frequency is adjusted in this procedure.

1. Place the HP 70900B local oscillator source on a module extender and connect the equipment as illustrated in Figure 6-9. Connect the synthesized source to the spectrum analyzer. *Do not* connect the external reference to the HP 70900B local oscillator source.
2. Run Adjustment 04. Calibrator Output Frequency from the HP Module Verification Software. The program calculates the spectrum analyzer's frequency readout error before performing any frequency measurements.
3. After connecting the spectrum analyzer to the HP 70900B local oscillator source's front panel CALIBRATOR jack, A6A1 100 MHz reference (C9) REF FREQ ADJ is adjusted to change the calibrator frequency. Access the adjustment through a hole in the module's top cover labeled REF FREQ ADJUST. This adjustment is made in five spectrum analyzer spans decreasing from 200 kHz to 100 Hz.

Adjustment 05. Calibrator Output Amplitude

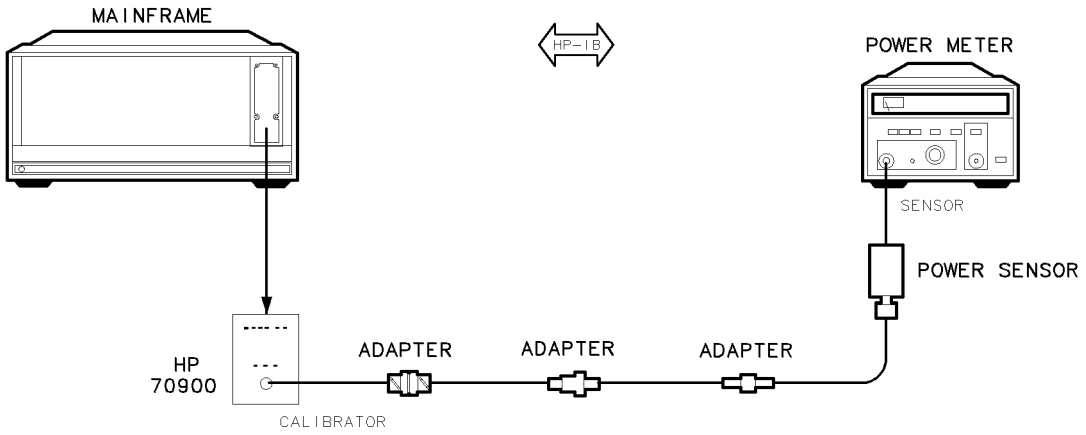

Figure 6-10. Equipment Setup for Adjustment 05. Calibrator Output Amplitude

Test Equipment	Preferred Model Numbers
Power meter	HP 437B power meter
Power sensor	HP 8485A APC-3.5 mm(m) power sensor
Extender module	HP 70001-60013 extender module
Adapter	HP 5061-5311 50Ω APC-3.5(f) to APC-3.5(f)
Adapter	HP 1250-1200 50Ω SMA(m) to BNC(f)
Adapter	HP 1250-0216 50Ω BNC(m) to BNC(m)

The output amplitude of the DUT's 300 MHz calibrator signal is adjusted.

1. Place the HP 70900B local oscillator source on a module extender and connect the equipment as illustrated in Figure 6-10.
2. Run Adjustment 05. Calibrator Output Amplitude from the HP Module Verification Software.
3. Component A4A1 300 MHz amplifier (R84) CAL LEVEL ADJ adjusts the calibrator's amplitude. Access this component through the hole in the module's top cover labeled CAL LEVEL ADJ.

Adjustment 06. 300 MHz Reference Output Amplitude

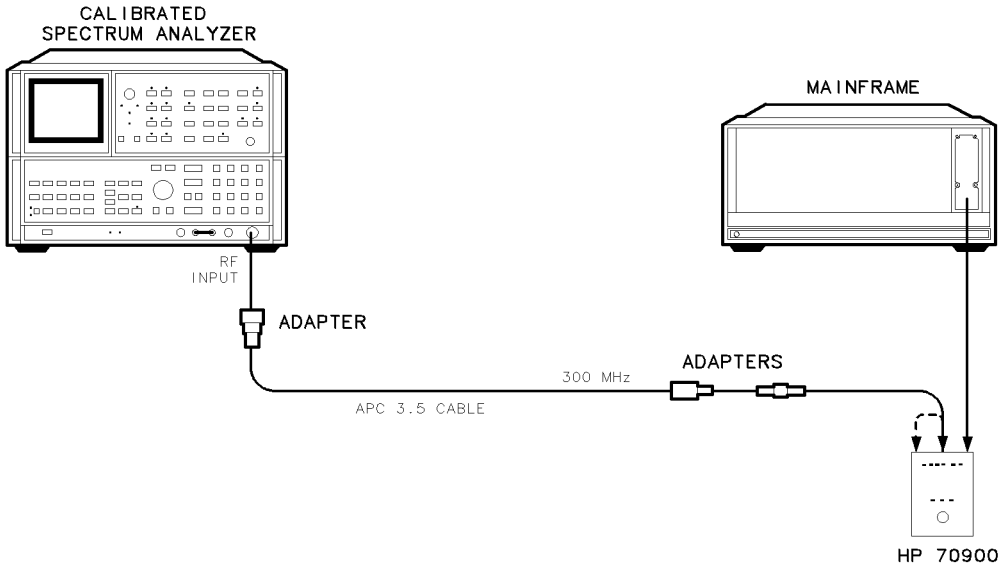

Figure 6-11. Equipment Setup for Adjustment 06. 300 MHz Reference Output Amplitude

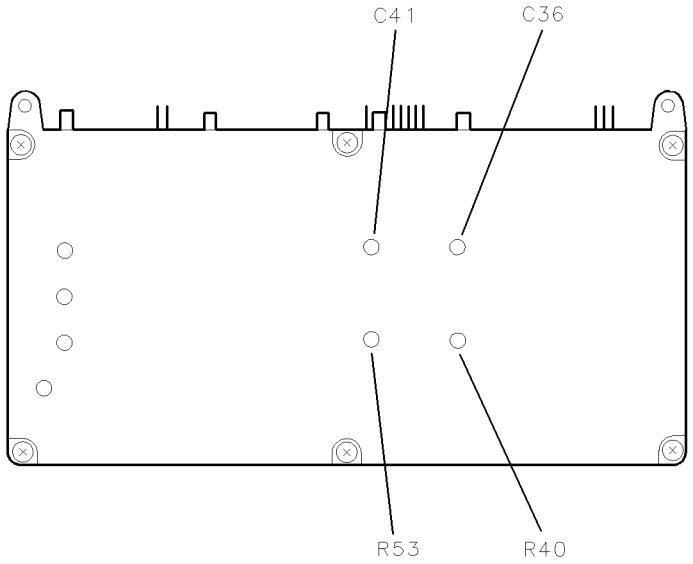

Figure 6-12. Locations for Adjustment 06. 300 MHz Reference Output Amplitude

Test Equipment	Preferred Model Numbers
Calibrated spectrum analyzer	HP 8566B spectrum analyzer
Extender module	HP 70001-60013 extender module
Adapter	HP 1250-0674 50Ω SMB(m) to SMA(f)
Adapter	HP 1250-0672 50Ω SMB(f) to SMB(f)
Adapter	HP 1250-1744 50Ω APC-3.5(f) to N(m)
Cable	HP 8120-4921 91 cm (35.8 in) 50Ω APC-3.5 mm(m) to APC-3.5 mm(m)
Extender cable	HP 70900-60061 7 pin extender cable
Extender cable	HP 70900-60065 14 pin extender cable
Extender cable	HP 70900-60059 50 pin extender cable
Extender cable (A1A1 host/processor)	HP 70900-60058 50 pin extender cable

The two 300 MHz reference output signals of the HP 70900B local oscillator source are adjusted for output power.

The A4A1 300 MHz amplifier adjustments are located just behind the A2 video processor. Both the A1A1 host/processor and A2 video processor must be removed, and then electrically reconnected to the HP 70900B local oscillator source using extender cables from the HP 70900 LO Service Kit.

Refer to Figure 6-5 for instructions on placing these assemblies on extender cables.

1. Place the HP 70900B local oscillator source on an extender module, and connect the equipment as illustrated in Figure 6-11.
2. Run Adjustment 06. 300 MHz Reference Output Amplitude from the HP Module Verification Software.
3. The output circuits are peaked for maximum signal at 300 MHz. A4A1 300 MHz amplifier (C41) tunes the 300 MHz 1 output circuit and A4A1 300 MHz amplifier (C36) tunes the 300 MHz 2 output circuit. Refer to Figure 6-12 for the location of these components.
4. The power out of each rear panel, 300 MHz jack is set to 0 dBm ±0.1 dB. A4A1 300 MHz amplifier (R53) adjusts the power out of the 300 MHz 1 jack. A4A1 300 MHz amplifier (R40) adjusts the power out of the 300 MHz 2 jack. See Figure 6-12 for the location of these components.

Adjustment 07. FFS VCO

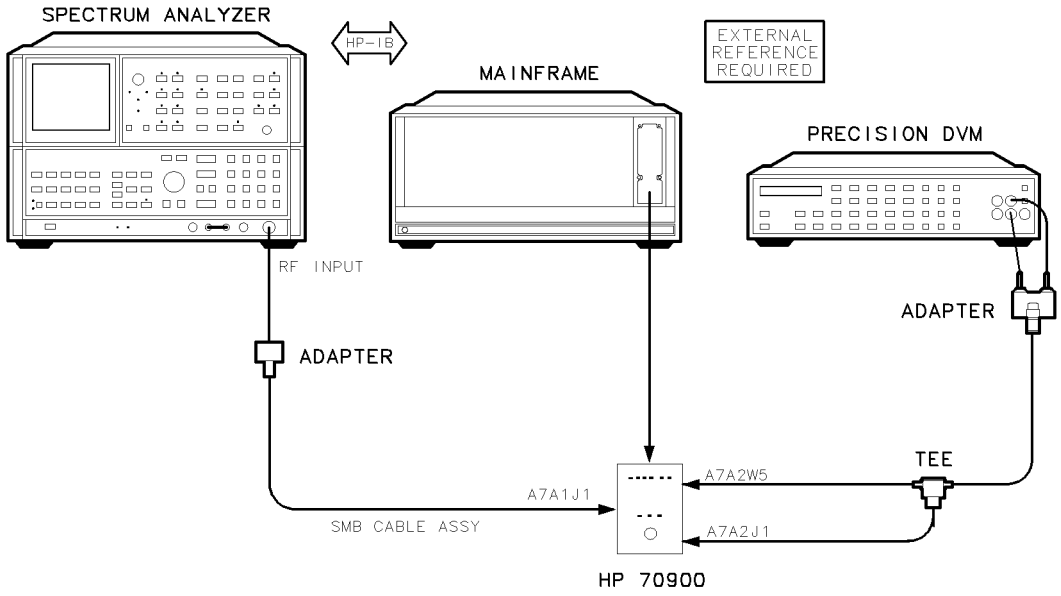

Figure 6-13. Equipment Setup for Adjustment 07. FFS VCO

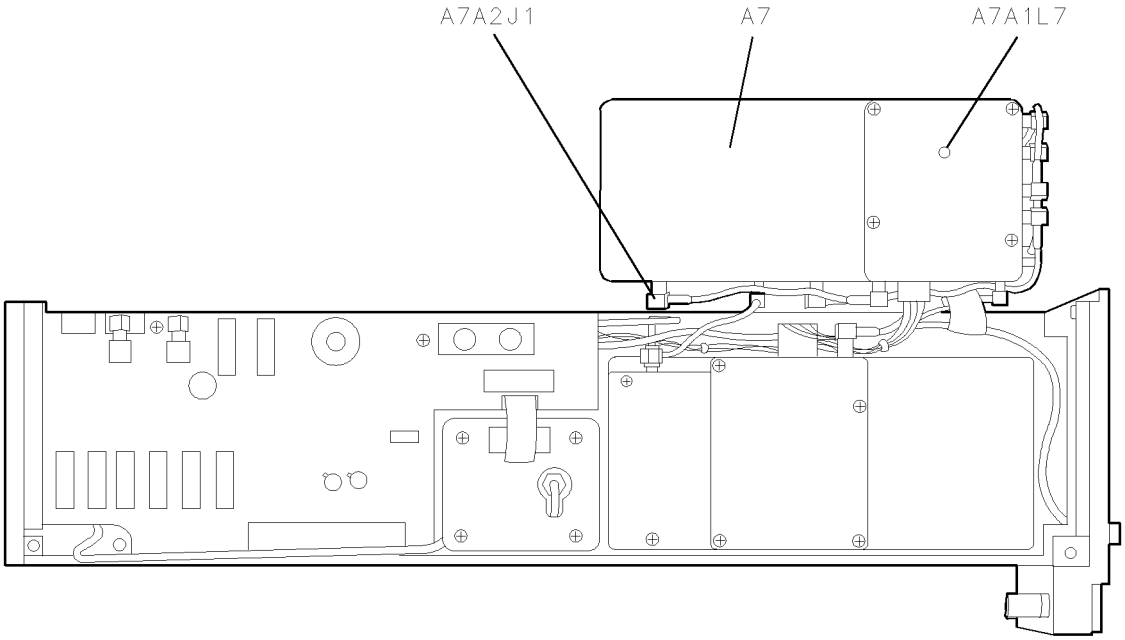

Figure 6-14. Locations for Adjustment 07. FFS VCO

Test Equipment	Preferred Model Numbers
Spectrum analyzer	HP 8566B spectrum analyzer
Precision digital voltmeter	HP 3456A digital multimeter
Extender module	HP 70001-60013 extender module
External reference	Refer to "External Frequency Reference" in Chapter 8.
Adapter	HP 1250-1476 precision 50Ω N(m) to BNC(f)
Adapter	HP 1250-1391 50Ω SMB tee(f) (m) (m)
Adapter	HP 1251-2277 50Ω BNC(f) to dual banana plug
Adapter	HP 1250-1200 50Ω SMA(m) to BNC(f)
Adapter	HP 1250-0674 50Ω SMB(m) to SMA(f)
Cable *(2 required)*	HP 85680-60093 123 cm (48.4 in) 50Ω BNC(m) to SMB(f)
Extender cable	HP 70900-60065 14 pin extender cable
Extender cable (A1A1 host/processor)	HP 70900-60058 50 pin extender cable

This procedure adjusts the tuning range of the FFS voltage-controlled oscillator (VCO).

1. Set the mainframe line switch to off.
2. Place the HP 70900B local oscillator source on its side, then remove the three screws securing the A7A1 FFS phase lock loop/A7A2 FFS analog to the chassis frame. Without removing any cables from the FFS assembly, rotate the assembly forward and up to allow access to A7A1 FFS phase lock loop (L7). See Figure 6-14.
3. Set the mainframe line switch to ON.
4. Connect the equipment as illustrated in Figure 6-13. Connect a BNC(m) to SMB(f) cable from the DVM to one side of the SMB tee. Remove the cable (A7W5) from A7A2 FFS analog (J1) shown in Figure 6-14 and connect it to the other side of the SMB tee. Connect an SMB(m) to BNC(m) cable to A7A2 FFS analog (J1). Use the appropriate adapters to connect the cable to the SMB tee.
5. Remove W1 cable assembly from A7A1 FFS phase lock loop. (Refer to Chapter 10 for the location of W1.) Connect an SMB cable from the spectrum analyzer's RF INPUT to A7A1 FFS phase lock loop (J1).
6. Set the mainframe line switch to on.
7. Run the Adjustment 07. FFS VCO from the HP Module Verification Software.
8. The DVM monitors the FFS phase-lock loop tune voltage. The spectrum analyzer monitors the FFS VCO output.
9. The program confirms that the FFS VCO output at 52 MHz is greater than 10 dBm. The FFS VCO then tunes to 35 MHz. The user is prompted to adjust A7A1 FFS phase lock loop (L7) for a DVM reading between 9 and 9.5 Vdc.
10. The program tunes the FFS VCO to 31.5 MHz and 73 MHz, respectively. The VCO frequency is varied until the phase-lock loop becomes unlocked. In this way, the minimum and maximum FFS VCO frequencies are determined. The minimum FFS VCO frequency must be less than 31.5 MHz; the maximum must be greater than 73 MHz.

Adjustment 08. FFS Tune/Comp Coarse

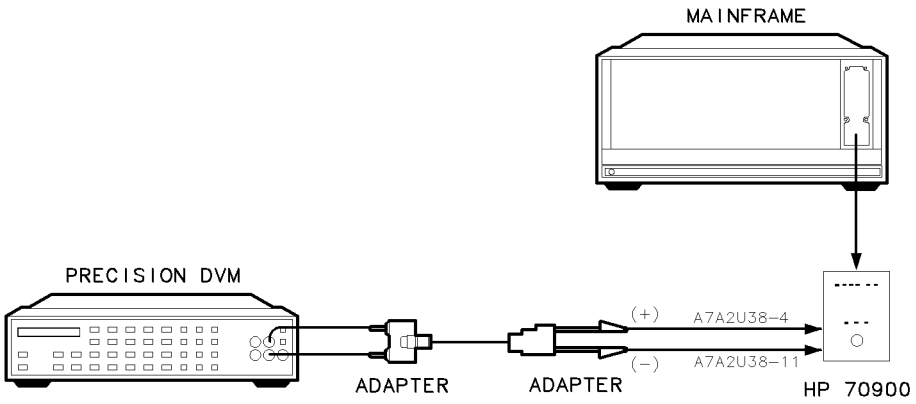

Figure 6-15. Equipment Setup for Adjustment 08. FFS Tune/Comp Coarse

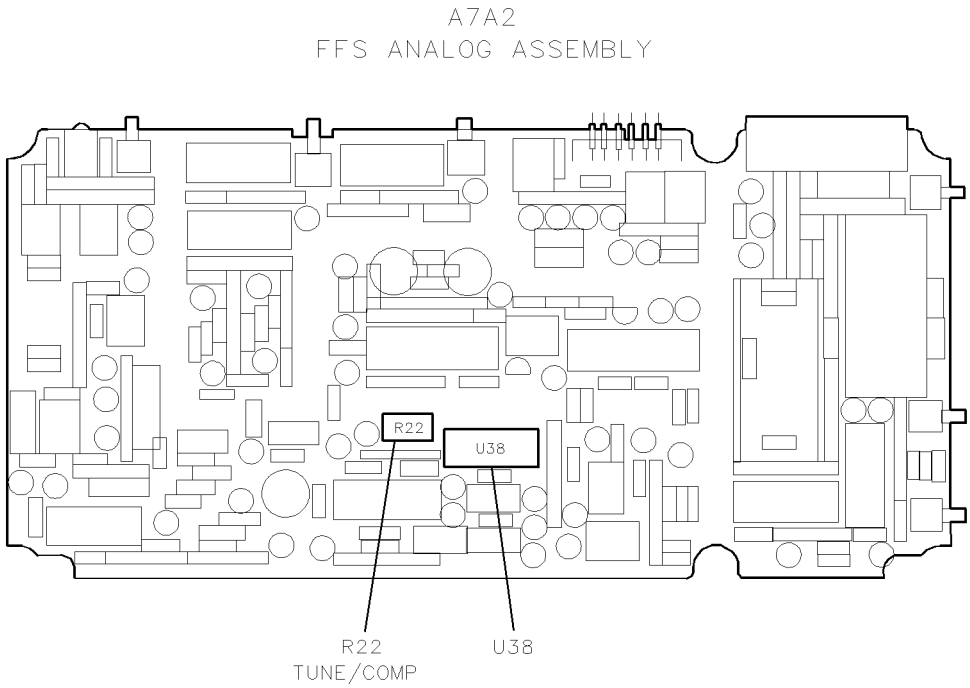

Figure 6-16. Locations for Adjustment 08. FFS Tune/Comp Coarse

Test Equipment	**Preferred Model Numbers**
Precision digital voltmeter	HP 3456A digital multimeter
Extender module	HP 70001-60013 extender module
Adapter	HP 1250-1292 50Ω BNC(f) to alligator clips
Adapter	HP 1251-2277 50Ω BNC(f) to dual banana plug
Cable	HP 8120-1840 122 cm (48 in) 50Ω coaxial BNC(m) to BNC(m)

This test sets up the analog phase interpolator (API) DACs on the A7A2 FFS analog. This test must be completed before making further adjustments to the A7A2 FFS analog. Perform Adjustment 13. FFS Tune/Comp Fine after all other A7A2 FFS analog adjustments are complete.

1. Remove the HP 70900B local oscillator source's cover and place the module on an extender cable. Remove the A7A2 FFS analog cover.
2. A voltmeter measures voltage potentials on A7A2 FFS analog (U36), as illustrated in Figure 6-15. To provide access for the voltmeter probes, attach a 14-pin IC clip on U36. You can make a 14-pin clip by cutting off the two end pins of a standard 16-pin IC clip (HP part number 1400-0734). Trim the clip's plastic body to expose about 3 mm of each pin.
3. Connect the voltmeter's positive lead to A7A2 FFS analog (U38) pin-4 and its negative lead to A7A2 FFS analog (U38) pin-11. See Figure 6-16.
4. Run Adjustment 08. FFS Tune/Comp Coarse from the HP Module Verification Software.
5. The program tunes the FFS phase-lock loop to 35 MHz. This sets the API DACs to a known state. The precision DVM measures the voltage across A7A2 FFS analog (R22) tune/comp potentiometer. This component is adjusted for 0 V ± 10 μV.

Adjustment 09. FFS Reference Null

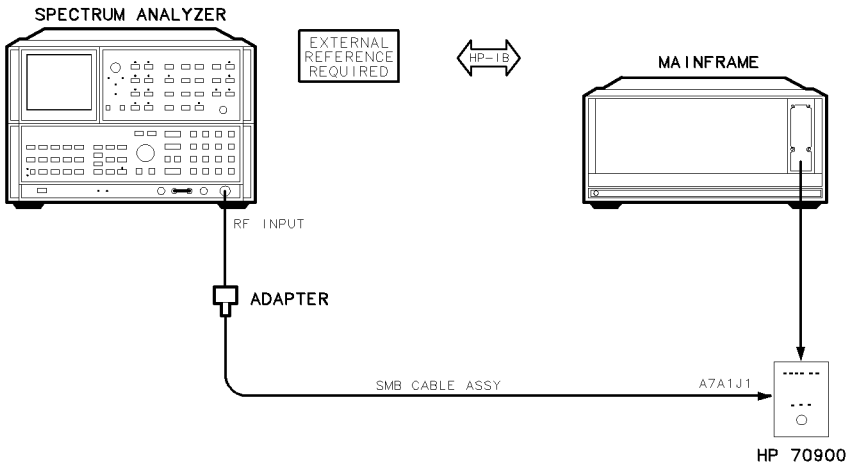

Figure 6-17. Equipment Setup for Adjustment 09. FFS Reference Null

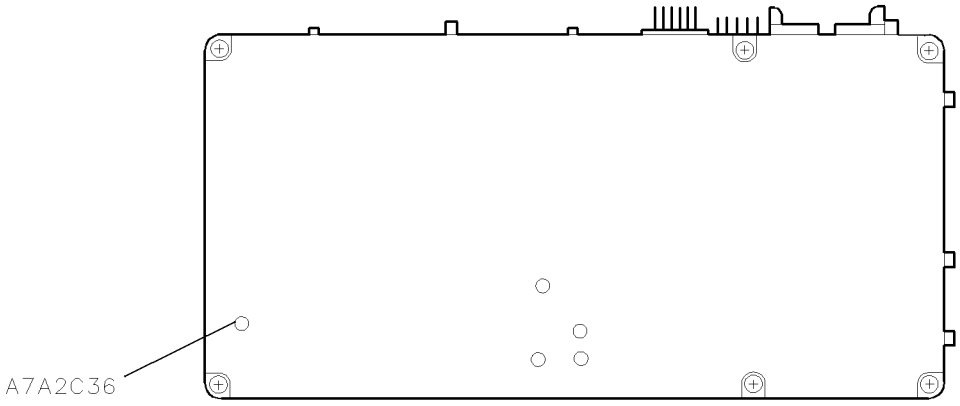

Figure 6-18. Locations for Adjustment 09. FFS Reference Null

Test Equipment	Preferred Model Numbers
Spectrum analyzer	HP 8566B spectrum analyzer
Extender module	HP 70001-60013 extender module
External reference	Refer to "External Frequency Reference" in Chapter 8.
Adapter	HP 1250-1476 precision 50Ω N(m) to BNC(f)
Cable	HP 85680-60093 123 cm (48.4 in) 50Ω BNC(m) to SMB(f)

This adjustment nulls the 125/124.844 kHz FFS reference signal feedthrough, which appears as a sideband on the FFS VCO OUT signal.

1. Connect the equipment as illustrated in Figure 6-17. Remove W1 from A7A1 FFS phase lock loop (J1), then connect the spectrum analyzer to this jack. Refer to Chapter 10 for the location of A7A1 FFS phase lock loop (J1).
2. Run Adjustment 09. FFS Reference Null from the HP Module Verification Software.
3. The program tunes the module's FFS phase-lock loop to 35 MHz and tunes this loop's reference input to 125 kHz. The spectrum analyzer searches for the resulting 125 kHz sideband on the FFS output. Adjust A7A2 FFS analog (C36) to minimize the sideband. See Figure 6-18 for the location of C36.
4. After the adjustment, the program tests for 125 kHz sidebands at eleven FFS frequencies between 35 and 70 MHz. Each sideband must be below −80 dBc.

Adjustment 10. FFS API 1

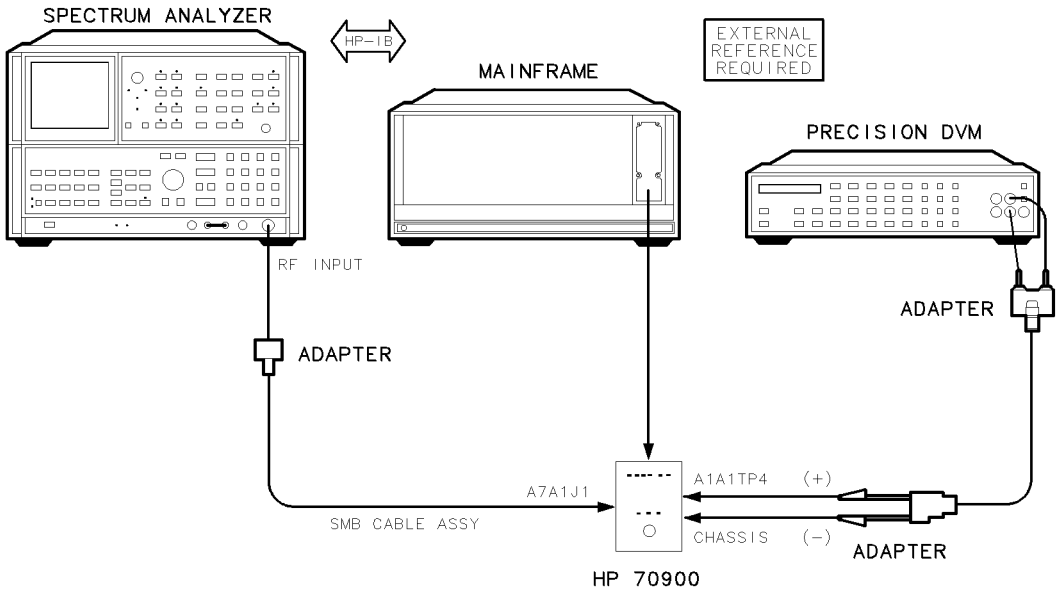

Figure 6-19. Equipment Setup for Adjustment 10. FFS API 1

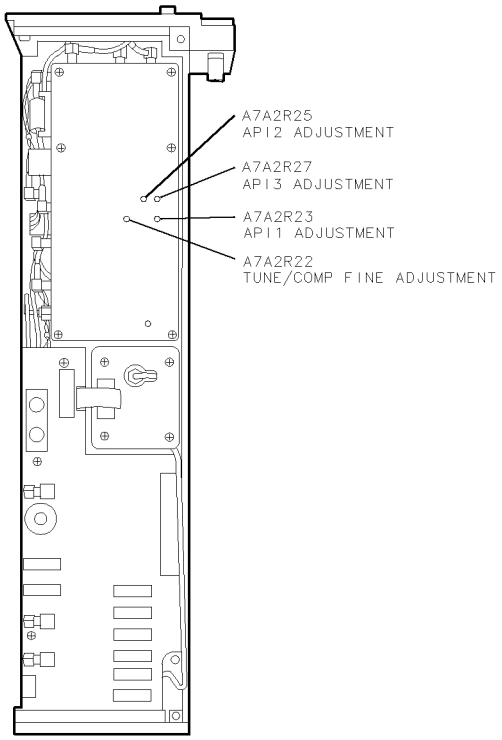

Figure 6-20. Locations for Adjustment 10. FFS API 1 (1 of 2)

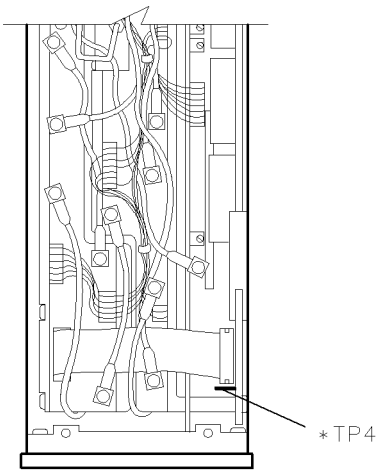

Figure 6-21. Locations for Adjustment 10. FFS API 1 (2 of 2)

Test Equipment	Preferred Model Numbers
Spectrum analyzer	HP 8566B spectrum analyzer
Precision digital voltmeter	HP 3456A digital multimeter
Extender module	HP 70001-60013 extender module
External reference	Refer to "External Frequency Reference" in Chapter 8.
Adapter	HP 1250-1476 precision 50Ω N(m) to BNC(f)
Adapter	HP 1250-1292 50Ω BNC(f) to alligator clips
Adapter	HP 1251-2277 50Ω BNC(f) to dual banana plug
Cable	HP 8120-1840 122 cm (48 in) 50Ω coaxial BNC(m) to BNC(m)
Cable	HP 85680-60093 123 cm (48.4 in) 50Ω BNC(m) to SMB(f)

The A7A2 FFS analog includes three analog phase interpolator DACs, API 1, API 2, and API 3. Poor matching between these DACs and their current sources can introduce spurious responses on the FFS phase-lock loop. This procedure adjusts the API 1 current source to improve the match between the current source and the DAC, thus minimizing spurs on the FFS phase-lock loop.

1. Connect the equipment as illustrated in Figure 6-19. Connect the spectrum analyzer to A7A1 FFS phase lock loop (J1). (Refer to Chapter 10 for the location of A7A1 FFS phase lock loop (J1).) Connect the DVM's positive lead to A1A1 host/processor (TP4). Use the LO service kit's mini-grabber clip to connect the DVM lead to the test point. See Figure 6-21 for the location of A1A1 host/processor (TP4). Connect the DVM's negative lead to chassis ground.
2. Run the Adjustment 10. FFS API 1 from the HP Module Verification Software. The spectrum analyzer monitors the FFS VCO frequency. The precision DVM monitors the FFS lock/unlock indicator signal.
3. The program tunes the FFS phase-lock loop to 72.126250 MHz and measures a known spurious response at 72.125 MHz. If the spur is above −82 dBc, potentiometer A7A2 FFS analog (R23) is adjusted to null the spur. See Figure 6-20 for the location of A7A2 FFS analog (R23). (This also shows the locations of components adjusted in Adjustment 11. FFS API 2 and Adjustment 12. FFS API 3.) If the spur is within test limits, no adjustment is necessary.

Adjustment 11. FFS API 2

Note For equipment setup and adjustment locations used during this adjustment, refer to Figure 6-19, Figure 6-20, and Figure 6-21.

Test Equipment	Preferred Model Numbers
Spectrum analyzer	HP 8566B spectrum analyzer
Precision digital voltmeter	HP 3456A digital multimeter
Extender module	HP 70001-60013 extender module
External reference	Refer to "External Frequency Reference" in Chapter 8.
Adapter	HP 1250-1476 precision 50Ω N(m) to BNC(f)
Adapter	HP 1250-1292 50Ω BNC(f) to alligator clips
Adapter	HP 1251-2277 50Ω BNC(f) to dual banana plug
Cable	HP 8120-1840 122 cm (48 in) 50Ω coaxial BNC(m) to BNC(m)
Cable	HP 85680-60093 123 cm (48.4 in) 50Ω BNC(m) to SMB(f)

The A7A2 FFS analog includes three analog phase interpolator DACs, API 1, API 2, and API 3. Poor matching between these DACs and their current sources can introduce spurious responses in the FFS phase-lock loop. This procedure adjusts the API 2 current source to improve the match between the current source and the DAC, and thus minimizes spurs on the FFS phase-lock loop.

1. Connect the equipment as illustrated in Figure 6-19. Connect the spectrum analyzer to A7A1 FFS phase lock loop (J1). (Refer to Figure 6-21 for the location of A7A1 FFS phase lock loop (J1).) Connect the DVM's positive lead to A1A1 host/processor (TP4). Use the LO service kit's mini-grabber clip to connect the DVM lead to the test point. See Figure 6-21 for the location of A1A1 host/processor (TP4). Connect the DVM's negative lead to chassis ground.
2. Run Adjustment 11. FFS API 2 from the HP Module Verification Software. The spectrum analyzer monitors the FFS VCO frequency. The precision DVM monitors the FFS lock/unlock indicator signal.
3. The program tunes the FFS phase-lock loop to 72.125125 MHz and measures a known spurious response at 70.123875 MHz. If the spur is greater than −82 dBc, potentiometer A7A2 FFS analog (R25) is adjusted to null the spur. See Figure 6-20 to locate A7A2 FFS analog (R25). If the spur is within test limits, no adjustment is necessary.

Adjustment 12. FFS API 3

Note For equipment setup and adjustment locations used during this adjustment, refer to Figure 6-19, Figure 6-20, and Figure 6-21.

Test Equipment	Preferred Model Numbers
Spectrum analyzer	HP 8566B spectrum analyzer
Precision digital voltmeter	HP 3456A digital multimeter
Extender module	HP 70001-60013 extender module
External reference	Refer to "External Frequency Reference" in Chapter 8.
Adapter	HP 1250-1476 precision 50Ω N(m) to BNC(f)
Adapter	HP 1250-1292 50Ω BNC(f) to alligator clips
Adapter	HP 1251-2277 50Ω BNC(f) to dual banana plug
Cable	HP 8120-1840 122 cm (48 in) 50Ω coaxial BNC(m) to BNC(m)
Cable	HP 85680-60093 123 cm (48.4 in) 50Ω BNC(m) to SMB(f)

The A7A2 FFS analog includes three analog phase interpolator DACs, API 1, API 2, and API 3. Poor matching between these DACs and their current sources can introduce spurious responses in the FFS phase-lock loop. This procedure adjusts the API 3 current source to improve the match between the current source and the DAC, and thus minimizes spurs on the FFS phase-lock loop.

1. Connect the equipment as illustrated in Figure 6-19 Connect the spectrum analyzer to A7A1 FFS phase lock loop (J1). (Refer to Chapter 10 for the location of A7A1 FFS phase lock loop (J1).) Connect the DVM's positive lead to A1A1 host/processor (TP4). Use the LO service kit's mini-grabber clip to connect the DVM lead to the test point. See Figure 6-21 for the location of TP4. Connect the DVM's negative lead to chassis ground.
2. Run Adjustment 12. FFS API 3 from the HP Module Verification Software. The spectrum analyzer monitors the FFS VCO frequency. The precision DVM monitors the FFS lock/unlock indicator signal.
3. The program tunes the FFS phase-lock loop to 70.1250125 MHz, then measures a known spurious response at 70.12376 MHz. If the spur is greater than −82 dBc, potentiometer A7A2 FFS analog (R27) is adjusted to null the spur. See Figure 6-20. If the spur is within test limits, no adjustment is necessary.

Adjustment 13. FFS Tune/Comp Fine

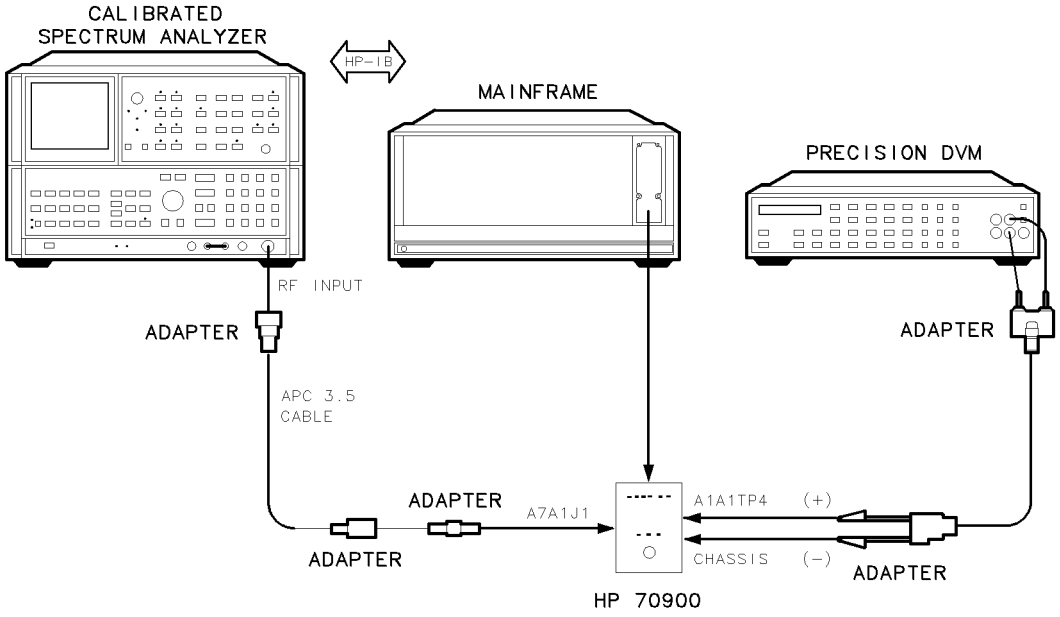

Figure 6-22. Equipment Setup for Adjustment 13. FFS Tune/Comp Fine

Test Equipment	Preferred Model Numbers
Calibrated spectrum analyzer	HP 8566B spectrum analyzer
Precision digital voltmeter	HP 3456A digital multimeter
Extender module	HP 70001-60013 extender module
Adapter	HP 1250-0674 50Ω SMB(m) to SMA(f)
Adapter	HP 1250-0672 50Ω SMB(f) to SMB(f)
Adapter	HP 1250-1744 50Ω APC-3.5(f) to N(m)
Adapter	HP 1250-1292 50Ω BNC(f) to alligator clips
Adapter	HP 1251-2277 50Ω BNC(f) to dual banana plug
Cable	HP 8120-4921 91 cm (35.8 in) 50Ω APC-3.5 mm(m) to APC-3.5 mm(m)
Cable	HP 8120-1840 122 cm (48 in) 50Ω coaxial BNC(m) to BNC(m)

The FFS API DAC tune/comp potentiometer is adjusted for minimum spurious response from the fractional frequency synthesizer.

1. Connect the equipment as illustrated in Figure 6-22. Connect the spectrum analyzer to A7A1 FFS phase lock loop (J1). See Figure 6-21 for the location of A7A1 FFS phase lock loop (J1). Connect the DVM's positive lead to A1A1 host/processor (TP4). Use the LO service kit's mini-grabber clip to connect the DVM lead to the test point. See Figure 6-21 for the location of TP4. Connect the DVM's negative lead to chassis ground.
2. Run the Adjustment 13. FFS Tune/Comp Fine from the HP Module Verification Software. The spectrum analyzer monitors the FFS VCO frequency. The precision DVM monitors the FFS lock/unlock indicator signal.
3. The spectrum analyzer looks for known spurs 1.25 kHz below FFS phase-lock loop frequencies of 35.126250 and 52.626250 MHz. If the spur level is greater than –85 dBc, A7A2 FFS analog (R22) is adjusted for minimum spur level at each FFS frequency. Refer

to Figure 6-20 for the location of A7A2 FFS analog (R22). This adjustment is an iterative process between the two FFS frequencies.

Adjustment 14. FFS Spurious Responses

Note This test should be run after all other FFS-related adjustments are complete.

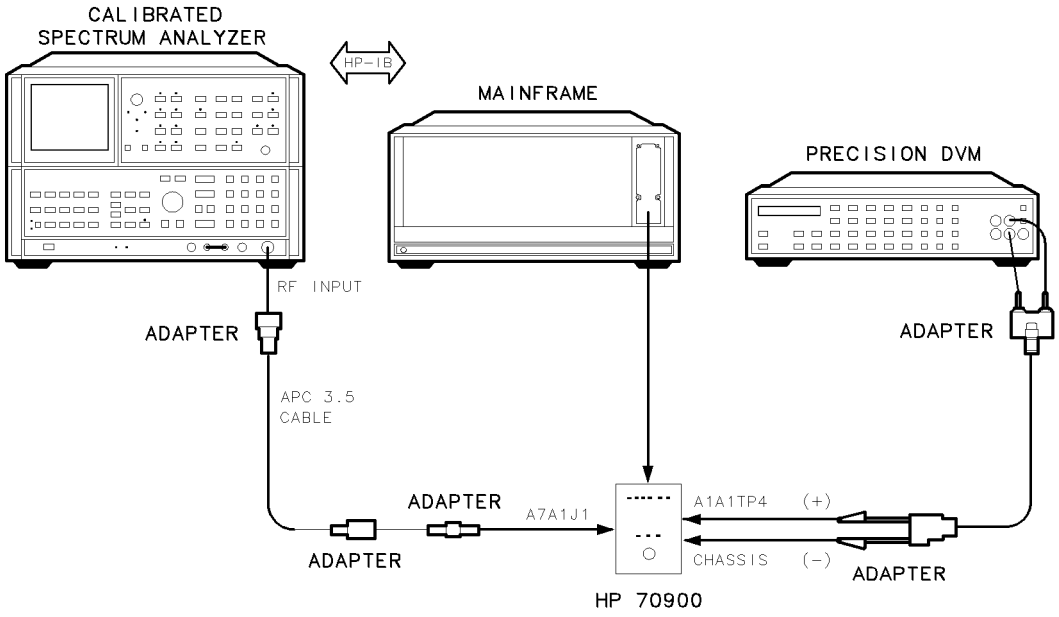

Figure 6-23. Equipment Setup for Adjustment 14. FFS Spurious Responses

Test Equipment	Preferred Model Numbers
Calibrated spectrum analyzer	HP 8566B spectrum analyzer
Precision digital voltmeter	HP 3456A digital multimeter
Extender module	HP 70001-60013 extender module
Adapter	HP 1250-0674 50Ω SMB(m) to SMA(f)
Adapter	HP 1250-0672 50Ω SMB(f) to SMB(f)
Adapter	HP 1250-1744 50Ω APC-3.5(f) to N(m)
Adapter	HP 1250-1292 50Ω BNC(f) to alligator clips
Adapter	HP 1251-2277 50Ω BNC(f) to dual banana plug
Cable	HP 8120-4921 91 cm (35.8 in) 50Ω APC-3.5 mm(m) to APC-3.5 mm(m)
Cable	HP 8120-1840 122 cm (48 in) 50Ω coaxial BNC(m) to BNC(m)
Extender cable	HP 70900-60065 14 pin extender cable
Extender cable (A1A1 host/processor)	HP 70900-60058 50 pin extender cable

This procedure verifies that the following list of adjustments are correct (no additional adjustments are performed):

Adjustment 08. FFS Tune/Comp Coarse
Adjustment 10. FFS API 1
Adjustment 11. FFS API 2
Adjustment 12. FFS API 3
Adjustment 13. FFS Tune/Comp Fine

1. Connect the equipment as illustrated in Figure 6-23. Connect the spectrum analyzer to A7A1 FFS phase lock loop (J1). (Refer to Chapter 10 for the location of A7A1 FFS phase lock loop (J1).) Connect the DVM's positive lead to A1A1 host/processor (TP4). Use the LO service kit's mini-grabber clip to connect the DVM lead to the test point. See Figure 6-21 for the location of TP4. Connect the DVM's negative lead to chassis ground.
2. Run Adjustment 14. FFS Spurious Responses from the HP Module Verification Software. The spectrum analyzer monitors the FFS VCO frequency. The precision DVM monitors the FFS lock/unlock indicator signal.
3. The LO module tunes the FFS loop to 18 frequencies from 35 to 70 MHz. For each FFS-loop frequency, the spectrum analyzer is tuned to where spurious responses resulting from the API DACs can be found. The spectrum analyzer measures the spurious responses in a 0 Hz span, 10 Hz resolution bandwidth. A spurious response must measure less than −75 dBc.

Adjustment 15. Low Idler

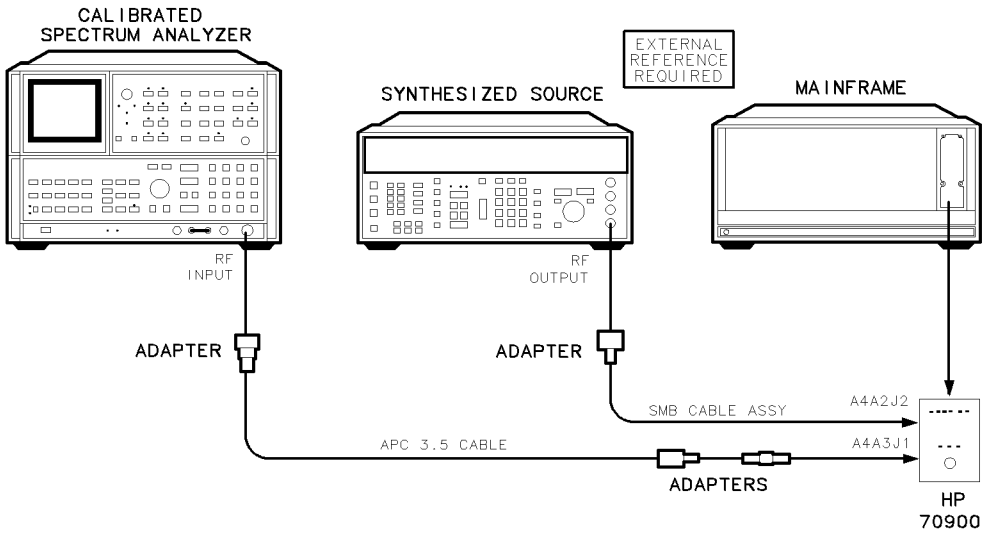

Figure 6-24. Equipment Setup for Adjustment 15. Low Idler

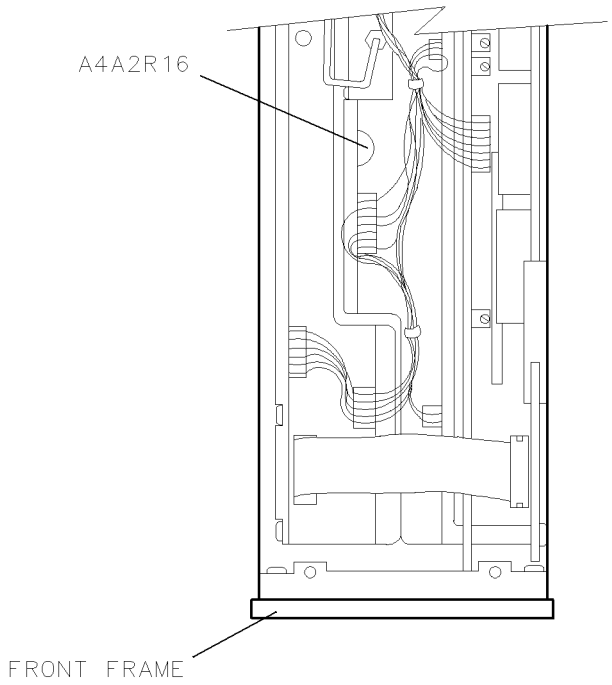

Figure 6-25. Locations for Adjustment 15. Low Idler

Test Equipment	Preferred Model Numbers
Calibrated spectrum analyzer	HP 8566B spectrum analyzer
Synthesized source	HP 8663A synthesized signal generator
External reference	Refer to "External Frequency Reference" in Chapter 8.
Adapter	HP 1250-0674 50Ω SMB(m) to SMA(f)
Adapter	HP 1250-0672 50Ω SMB(f) to SMB(f)
Adapter	HP 1250-1476 precision 50Ω N(m) to BNC(f)
Adapter	HP 1250-1744 50Ω APC-3.5(f) to N(m)
Cable	HP 8120-4921 91 cm (35.8 in) 50Ω APC-3.5 mm(m) to APC-3.5 mm(m)
Cable	HP 85680-60093 123 cm (48.4 in) 50Ω BNC(m) to SMB(f)

The power level of the low idler frequency (3.6 GHz), relative to the power level of the high idler frequency (5.4 GHz) is adjusted in this procedure. (The low idler frequency equals 3.6 GHz minus the FFS frequency. The high idler frequency equals 5.4 GHz minus the FFS frequency.)

1. Connect the equipment as illustrated in Figure 6-24. Refer to Chapter 10 for the location of A4A2 idler lock (J2) and A4A3 idler VCO microcircuit (J1).
2. Run Adjustment 15. Low Idler from the HP Module Verification Software.
3. The program uses the spectrum analyzer to measure both the high and low idler output power levels. Component A4A2 idler lock (R16) is adjusted to set the low-idler power level equal to the high-idler power level. A4A2 idler lock (R16) can be accessed through the top of the A4 idler phase-lock loop, as shown in Figure 6-25.

Adjustment 16. Sweep Offset

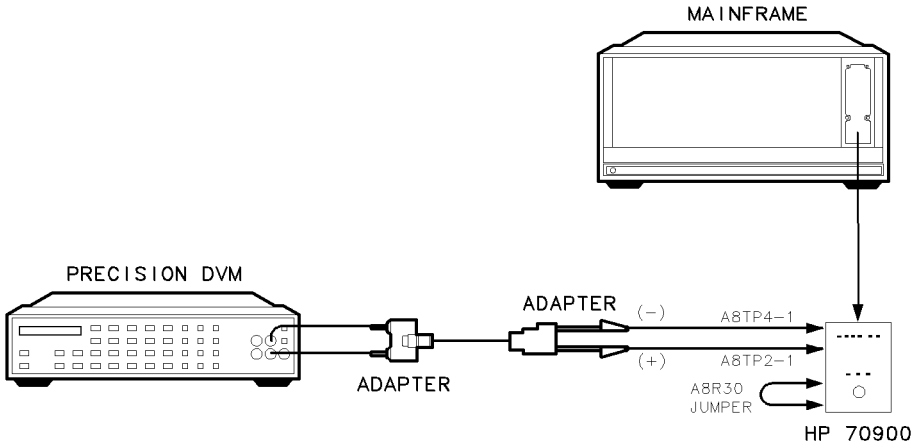

Figure 6-26. Equipment Setup for Adjustment 16. Sweep Offset

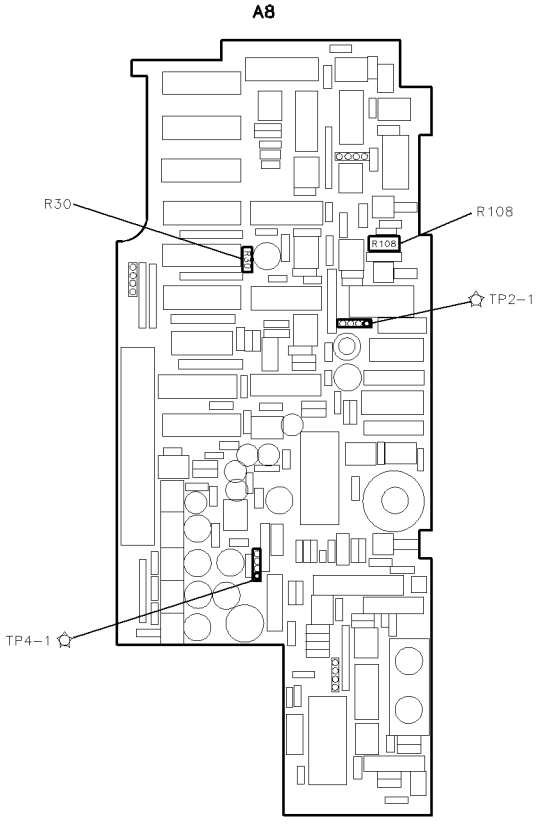

Figure 6-27. Locations for Adjustment 16. Sweep Offset

Test Equipment	Preferred Model Numbers
Precision digital voltmeter	HP 3456A digital multimeter
Extender module	HP 70001-60013 extender module
Adapter	HP 1250-1292 50Ω BNC(f) to alligator clips
Adapter	HP 1251-2277 50Ω BNC(f) to dual banana plug
Cable	HP 8120-1840 122 cm (48 in) 50Ω coaxial BNC(m) to BNC(m)

This adjustment nulls the A8 frequency control (U13) amplifier offset current in the sweep-ramp integrator circuit.

1. Remove the HP 70900B local oscillator source's cover and connect the equipment as illustrated in Figure 6-26. Connect the DVM ground lead to A8 frequency control (TP4-1) and the positive lead to A8 frequency control (TP2-1). Place a jumper wire across A8 frequency control (R30). See Figure 6-27.

CAUTION When shorting A8 frequency control (R30), be careful not to ground the case of A8 frequency control (U29). Grounding the case of A8 frequency control (U29) destroys the device.

Note Some assembly test points are grouped on a common connector (for example, A8 frequency control (TP4)). On these common connectors, test point one is always oriented towards the top or front of the module.

2. Run Adjustment 16. Sweep Offset from the HP Module Verification Software.
3. The integrator, which is used to smooth out the staircase sweep-ramp generated by the sweep DAC, has its input junction grounded by the jumper wire across A8 frequency control (R30). A 1000-second sweep is initiated in the local oscillator. After a 10-second pause, the user is prompted to adjust A8 frequency control (R108). The DVM measures the integrator output once every second. The difference between readings is calculated, then output graphically. This adjustment minimizes the difference between DVM readings, nulls the offset current, and thereby minimizes integrator drift.

Adjustment 17. Frequency Control Voltage References

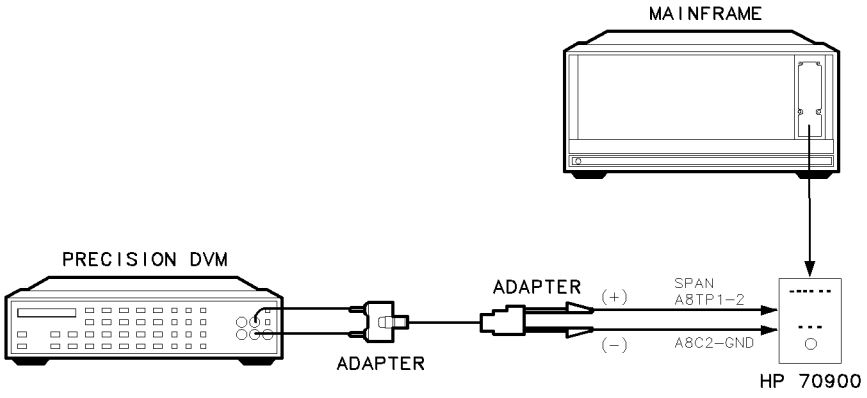

Figure 6-28. Equipment Setup for Adjustment 17. Frequency Control Voltage References

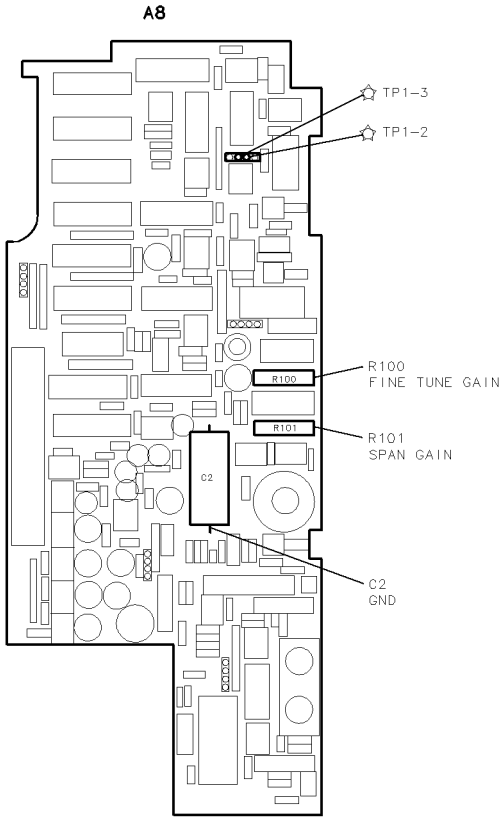

Figure 6-29. Locations for Adjustment 17. Frequency Control Voltage References

Test Equipment	Preferred Model Numbers
Precision digital voltmeter	HP 3456A digital multimeter
Extender module	HP 70001-60013 extender module
Adapter	HP 1250-1292 50Ω BNC(f) to alligator clips
Adapter	HP 1251-2277 50Ω BNC(f) to dual banana plug
Cable	HP 8120-1840 122 cm (48 in) 50Ω coaxial BNC(m) to BNC(m)

Voltage references on the A8 frequency control are adjusted to a 100 μV accuracy.

1. Remove the HP 70900B local oscillator source's cover and connect the equipment as illustrated in Figure 6-28. Connect the DVM positive lead to A8 frequency control (TP1-2) and the negative lead to the grounded side of A8 frequency control C2. See Figure 6-29.

Note Some assembly test points are grouped on a common connector (for example, A8 frequency control (TP1)). On these common connectors, test point one is always oriented toward the top or front of the module.

---

2. Run Adjustment 17. Frequency Control Voltage References from the HP Module Verification Software.
3. The DVM is connected to the span circuitry output. The program varies the tune DAC to ensure that the tune circuitry is isolated from the span circuitry.
4. The program prompts the user to adjust A8 frequency control (R100) FINE TUNE GAIN. This adjusts the positive voltage reference. The DVM monitors the span circuitry output for a reading of +10.2375 V ±0.0001 V.
5. After the positive voltage reference is set, the negative voltage reference is adjusted. The user is prompted to connect the DVM positive lead to A8 frequency control (TP1-3), the tune circuitry output. A8 frequency control (R101) SPAN GAIN is adjusted for a DVM reading of −10.2350 V ±0.0001 V.

Adjustment 18. YTO Frequency Endpoints

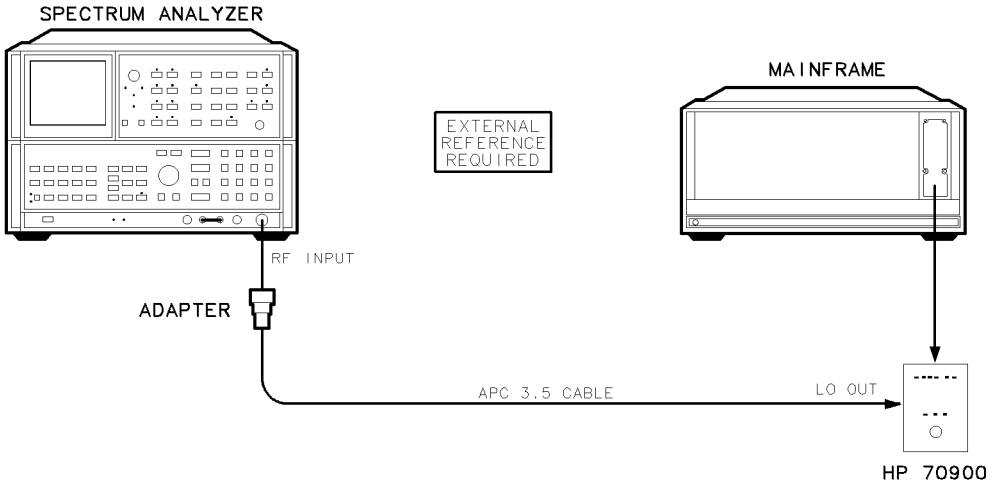

Figure 6-30. Equipment Setup for Adjustment 18. YTO Frequency Endpoints

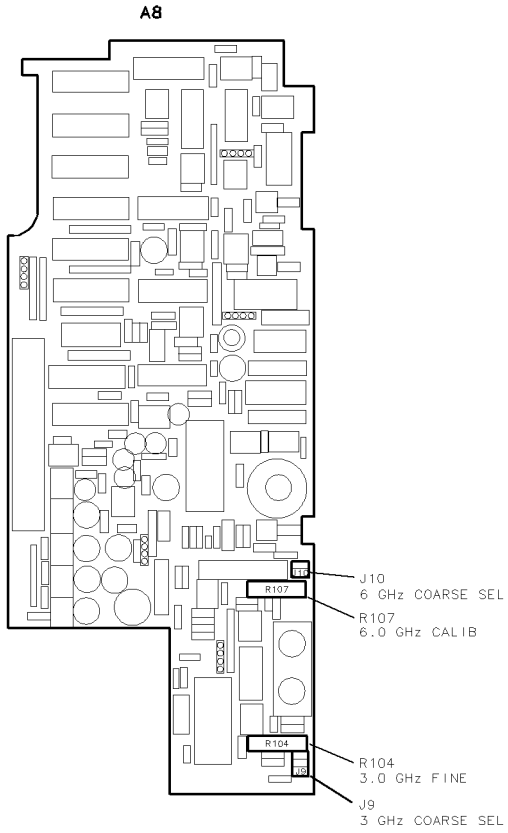

Figure 6-31. Locations for Adjustment 18. YTO Frequency Endpoints (1 of 2)

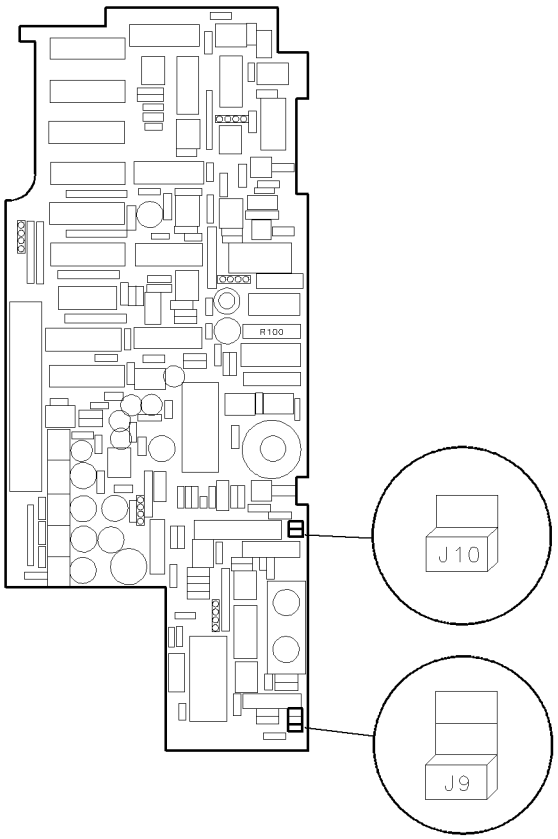

Figure 6-32. Locations for Adjustment 18. YTO Frequency Endpoints (2 of 2)

Test Equipment	Preferred Model Numbers
Spectrum analyzer	HP 8566B spectrum analyzer
Extender module	HP 70001-60013 extender module
External reference	Refer to "External Frequency Reference" in Chapter 8.
Adapter	HP 1250-1744 50Ω APC-3.5(f) to N(m)
Cable	HP 8120-4921 91 cm (35.8 in) 50Ω APC-3.5 mm(m) to APC-3.5 mm(m)

The fixed current sources are adjusted to set the 3.0 and 6.6 GHz YTO bias points.

1. Remove the HP 70900B local oscillator source's cover and connect the equipment as illustrated in Figure 6-30.
2. Run Adjustment 18. YTO Frequency Endpoints from the HP Module Verification Software.

Note During this test, the user is instructed to position jumpers on connectors J9 and J10. These connectors each have six pins which allow three jumper positions. Place the jumpers between two vertically-adjacent pins, as illustrated in Figure 6-32. See Figure 6-31 for the location of the connectors on the assembly. (Jumpers can be ordered by HP part number 1258-0225.)

3. Remove the 3 GHz COARSE SEL and 6 GHz COARSE SEL jumpers. Center in their range, potentiometers A8 frequency control (R104) 3.0 GHz FINE and A8 frequency control (R107) 6.0 GHz CALIB, shown in Figure 6-31.

Note The program calculates a best-fit curve over the entire YTO range. It is normal for the 3 GHz and 6.6 GHz signals to be offset slightly to meet this requirement.

---

4. The program sets the HP 70900B local oscillator source's frequency control DACs for a 3.0 GHz LO output signal and opens the YTO lock loop. The spectrum analyzer tunes to the 3.0 GHz LO output signal. The program instructs the user to center the signal on the spectrum analyzer by positioning the coarse-tune jumper on A8 frequency control (J9). Place the jumper in the position that best centers the signal. (The best centering may be accomplished with the jumper removed.)
5. The program tunes the HP 70900B local oscillator source LO and the spectrum analyzer to 6.6 GHz. Center the signal on the spectrum analyzer display by positioning the coarse-tune jumper A8 frequency control (J10). (The best centering may be accomplished with the jumper removed.)
6. The YTO frequency endpoints adjustment sets the local oscillator tuning range to 3.0 GHz. A8 frequency control (R107) 6.0 GHz CALIB is adjusted to set the 6.6 GHz endpoint frequency 3.6 GHz higher than the 3.0 endpoint frequency.
7. The YTO frequency endpoints are centered using A8 frequency control (R104) 3.0 GHz FINE. Fine-tuning is performed for spectrum analyzer spans of 1.0 GHz, 50 MHz, 10 MHz, and 1 MHz. The program may iterate between steps 6 and 7 until correct adjustment is achieved.

Adjustment 19. FM Gain

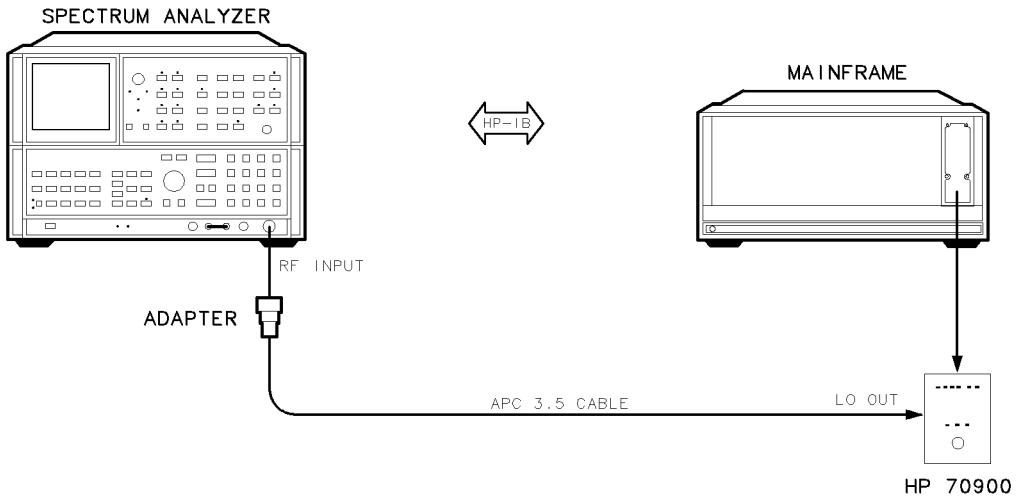

Figure 6-33. Equipment Setup for Adjustment 19. FM Gain

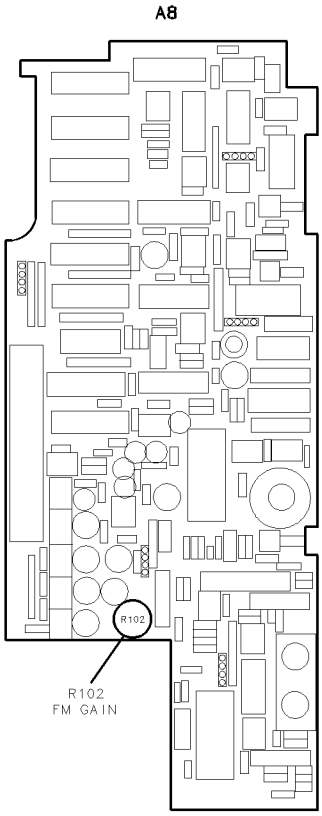

Figure 6-34. Locations for Adjustment 19. FM Gain

Adjustment 19. FM Gain

Test Equipment	Preferred Model Numbers
Spectrum analyzer	HP 8566B spectrum analyzer
Extender module	HP 70001-60013 extender module
External reference	Refer to "External Frequency Reference" in Chapter 8.
Adapter	HP 1250-1744 50Ω APC-3.5(f) to N(m)
Cable	HP 8120-4921 91 cm (35.8 in) 50Ω APC-3.5 mm(m) to APC-3.5 mm(m)

This adjustment sets the range of the YTO FM coil driver.

1. Remove the HP 70900B local oscillator source's cover and connect the equipment as illustrated in Figure 6-33.
2. Run Adjustment 19. FM Gain from the HP Module Verification Software.
3. The program sets the HP 70900B local oscillator source's start frequency correction DAC to a value equal to the error signal on the switchable FM coil driver calibrator line. These lines are toggled, which shifts the YTO output frequency. The program prompts the user to adjust A8 frequency control (R102) for a YTO output frequency deviation of less than 100 kHz. The adjustment is performed for three spectrum analyzer spans, 200 MHz, 20 MHz, and 1 MHz. See Figure 6-34 for the location of A8 frequency control (R102).

Adjustment 20. Sweep Overshoot

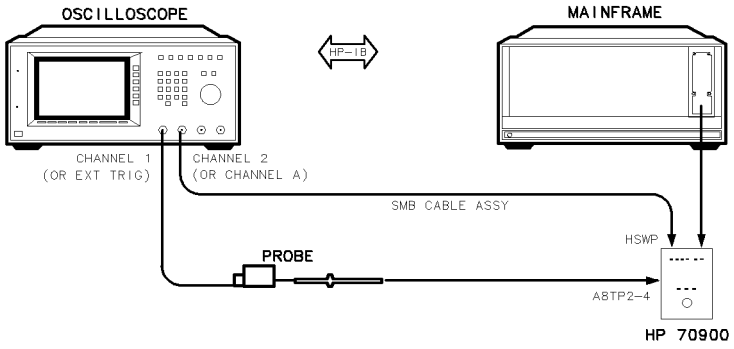

Figure 6-35. Equipment Setup for Adjustment 20. Sweep Overshoot

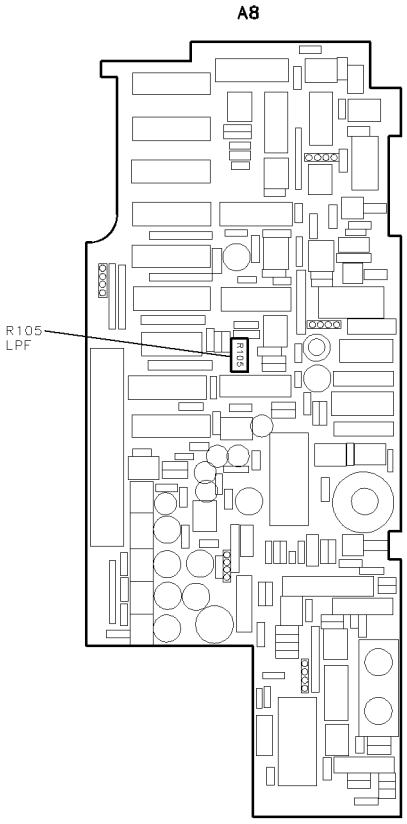

Figure 6-36. Locations for Adjustment 20. Sweep Overshoot

Adjustment 20. Sweep Overshoot

Test Equipment	Preferred Model Numbers
Oscilloscope	HP 54503A digitizing oscilloscope
Oscilloscope probe	HP 10080A oscilloscope probe
Extender module	HP 70001-60013 extender module
Cable	HP 85680-60093 123 cm (48.4 in) 50Ω BNC(m) to SMB(f)

The gain of the sweep-ramp generating circuit is adjusted.

1. Remove the HP 70900B local oscillator source's cover and connect the equipment as illustrated in Figure 6-35. Connect the oscilloscope probe to A8 frequency control (TP2-4). See Figure 6-36 for the location of the test point. The oscilloscope monitors the HP 70900B local oscillator source's sweep DAC output when triggered by the module's rear panel HSWP signal.

Note Some assembly test points are grouped on a common connector (for example, A8 frequency control (TP2)). On these common connectors, test point one is always oriented toward the top or front of the module.

---

2. Run Adjustment 20. Sweep Overshoot from the HP Module Verification Software.
3. The program sets the oscilloscope to the following settings:
   - Channel 1 (external trigger) ..... 2 V/div
   - Channel 2 ..... 2 V/div
   - Sweep Time ..... 200 μs/div

4. The HP 70900B local oscillator source's sweep DAC is programmed to output a voltage ramp at 50 ms sweeps. The sweep DAC output rises from a minimum of 0 V to a maximum of 8 to 10 V. The resulting response, displayed on the oscilloscope, is adjusted with A8 frequency control (R105) LPF for minimum overshoot voltage.

Adjustment 21. Tune + Span Offset

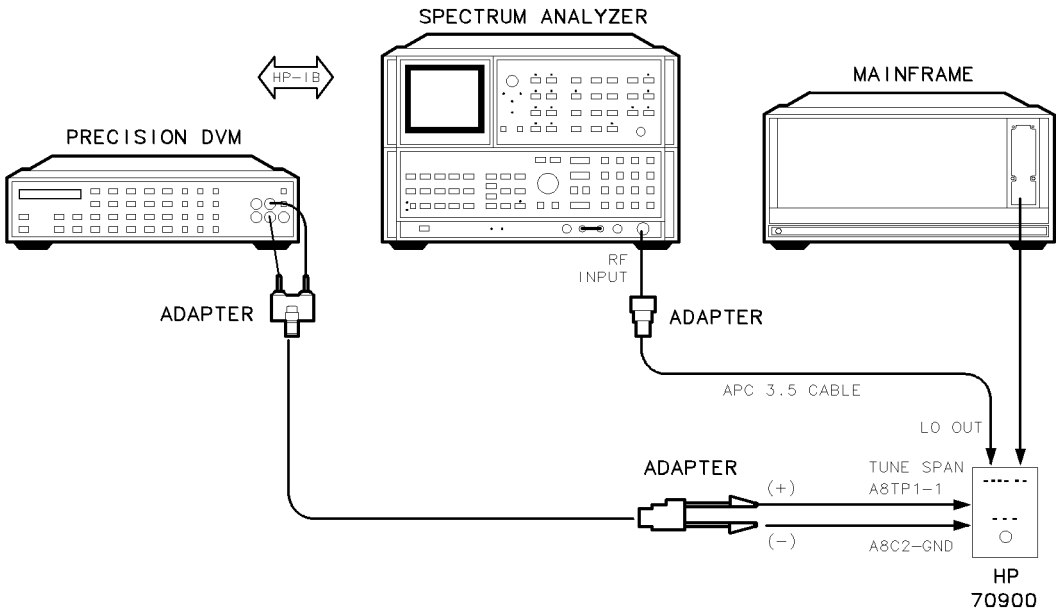

Figure 6-37. Equipment Setup for Adjustment 21. Tune + Span Offset

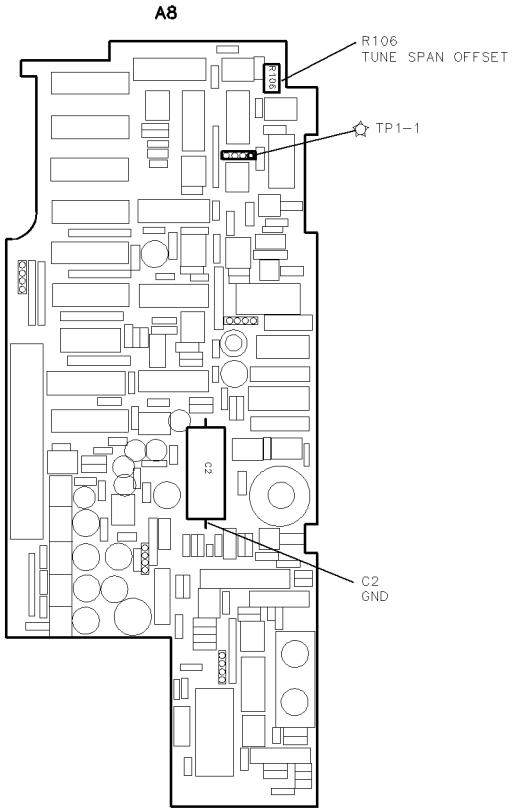

Figure 6-38. Locations for Adjustment 21. Tune + Span Offset

Adjustment 21. Tune + Span Offset

Test Equipment	Preferred Model Numbers
Spectrum analyzer	HP 8566B spectrum analyzer
Precision digital voltmeter	HP 3456A digital multimeter
Extender module	HP 70001-60013 extender module
Adapter	HP 1250-1744 50Ω APC-3.5(f) to N(m)
Adapter	HP 1250-1292 50Ω BNC(f) to alligator clips
Adapter	HP 1251-2277 50Ω BNC(f) to dual banana plug
Cable	HP 8120-4921 91 cm (35.8 in) 50Ω APC-3.5 mm(m) to APC-3.5 mm(m)
Cable	HP 8120-1840 122 cm (48 in) 50Ω coaxial BNC(m) to BNC(m)

The tune + span output voltage is adjusted for minimum offset.

1. Remove the HP 70900B local oscillator source's cover and connect the equipment as illustrated in Figure 6-37. The DVM ground lead connects to the grounded side of A8 frequency control (C2) and the positive lead connects to A8 frequency control (TP1-1). See Figure 6-38.

Note Some assembly test points are grouped on a common connector (for example, A8 frequency control (TP1)). On these common connectors, test point one is always oriented towards the top or front of the module.

---

2. Run Adjustment 21. Tune + Span Offset from the HP Module Verification Software.
3. The program sets the sweep and span DACs for a 0 V output and sets the tune DAC to produce a full output. The DVM monitors the rear panel TUNE SPAN voltage. The program prompts the user to adjust A8 frequency control (R106) TUNE + SPAN OFFSET for 10.3425 ±0.0005 Vdc.
4. The program sets the tune DAC for a 0 V output and sets the sweep and span DACs to produce a full output. Adjust A8 frequency control (R106) TUNE + SPAN OFFSET for 10.3425 ±0.0005 Vdc. The tune + span offset adjustment is an iterative process.
5. To re-check the tune offset, press `ADJUST TUNE`.

Adjustment 22. Idler Buffer

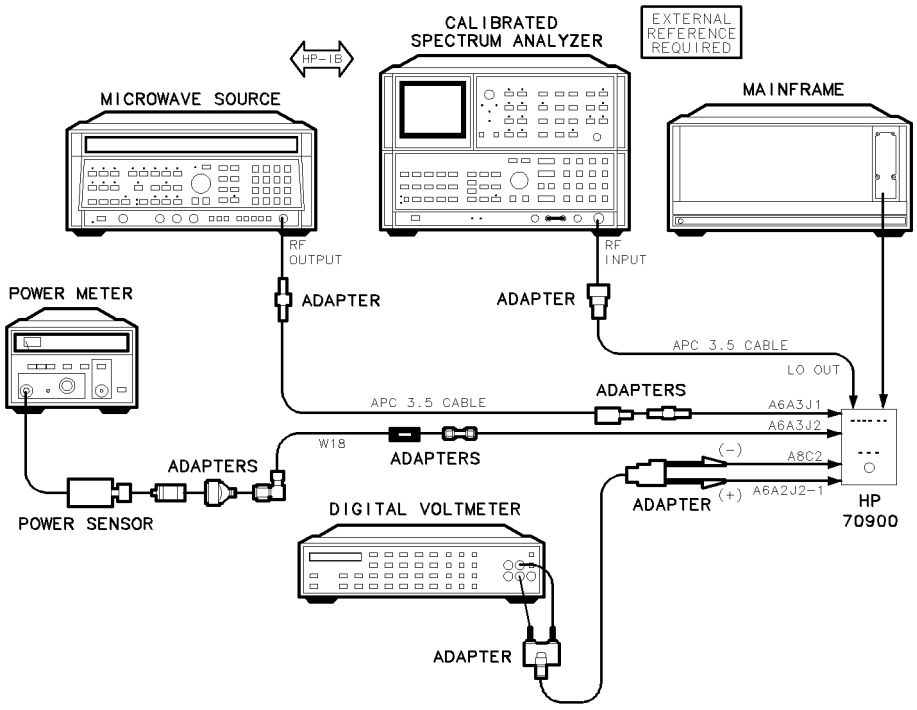

Figure 6-39. Equipment Setup for Adjustment 22. Idler Buffer

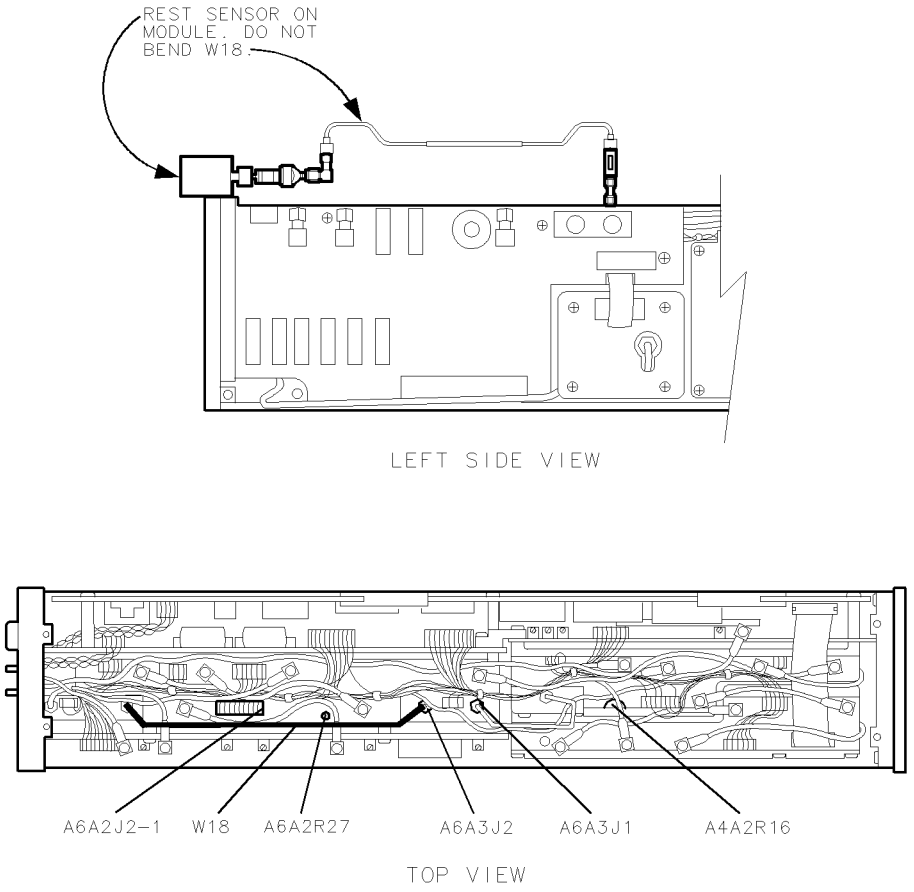

Figure 6-40. Locations for Adjustment 22. Idler Buffer

Test Equipment	Preferred Model Numbers
Calibrated spectrum analyzer	HP 8566B spectrum analyzer
Power meter	HP 437B power meter
Power sensor	HP 8485A APC-3.5 mm(m) power sensor
Precision digital voltmeter	HP 3456A digital multimeter
Microwave source	HP 8340A synthesized sweeper
Extender module	HP 70001-60013 extender module
External reference	Refer to "External Frequency Reference" in Chapter 8.
Adapter	HP 5061-5311 50Ω APC-3.5(f) to APC-3.5(f)
Adapter	HP 1250-0674 50Ω SMB(m) to SMA(f)
Adapter	HP 1250-1158 50Ω SMA(f) to SMA(f)
Adapter	HP 1250-1249 50Ω right angle SMA(m) to SMA(f)
Adapter	HP 1250-1250 50Ω N(m) to SMA(f)
Adapter	HP 1250-1745 50Ω APC-3.5(f) to N(f)
Adapter	HP 1250-0672 50Ω SMB(f) to SMB(f)
Adapter	HP 1250-1744 50Ω APC-3.5(f) to N(m)
Adapter	HP 1250-1159 50Ω SMA(m) to SMA(m)
Adapter	HP 1251-2277 50Ω BNC(f) to dual banana plug
Adapter	HP 1250-1292 50Ω BNC(f) to alligator clips
Cable *(2 required)*	HP 8120-4921 91 cm (35.8 in) 50Ω APC-3.5 mm(m) to APC-3.5 mm(m)
Cable	HP 8120-1840 122 cm (48 in) 50Ω coaxial BNC(m) to BNC(m)

The output power of the W18 low-pass filter is set to achieve correct phase noise while minimizing spurs. This involves adjusting the A6A3 idler buffer bias voltage and the output power of the A4A3 idler VCO microcircuit. The idler buffer bias adjustment is located on the A6A2 YTO lock the idler power adjustment is located on the A4A2 idler lock.

1. Set the mainframe line switch to off.
2. Remove the HP 70900B local oscillator source from the mainframe and place it on an extender module. Remove the module's cover. Connect the equipment as illustrated in Figure 6-39. Do not connect the microwave source or DVM at this time. Refer to Figure 10-9 for the location of A6A3 idler buffer (J1, J2), and A6A2 YTO lock (J5-1).
3. Run Adjustment 22. Idler Buffer from the HP Module Verification Software. The program prompts the user to select an idler source.
   a. `DUT IDL` uses the HP 70900B local oscillator sources internal circuitry as an idler input. Select this source for normal testing
   b. `SYN IDL` uses the microwave source as an idler input. Select this source for troubleshooting; idler buffer or FFS phase-lock loop problems can be isolated using this source.

   During this test, the spectrum analyzer measures a spur that occurs 30 kHz higher in frequency than the HP 70900B local oscillator source's LO signal. Measurements are repeated for 13 LO frequencies.
4. The program will prompt the user to select `ADJUST POWER`, `MEAS SPURS`, or `BOTH`. For normal testing, select "BOTH." The other two selections `ADJUST POWER` and `MEAS SPURS` are used for troubleshooting.
5. The program will pause and instruct the user to turn off the DUT, then remove A6 YTO phase-lock loop (W18) from between the A6A3 idler buffer and the A6A4 YTO lock microcircuit. Refer to Figure 6-40 for the location of A6 YTO phase-lock loop (W18).
   a. Install an SMA(m) to SMA(m) and SMA(f) to SMA(f) adapter combination at A6A3 idler buffer (J2).
   b. Connect one end of A6 YTO phase-lock loop (W18) to this SMA-adapter combination.
   c. Connect the other end of A6 YTO phase-lock loop (W18) to the right angle adapter.
   d. Connect the SMA right angle adapter to a second SMA(f) to SMA(f) adapter.
   e. Connect the power sensor to the second SMA(f) adapter.

f. Connect the ground lead of the DVM to A6A2 YTO lock (J5-1) and connect the negative lead to the positive terminal of A8 frequency control (C2).
g. Refer to Figure 6-40 for the location of A6A2 YTO lock (J5-1); refer to Figure 6-38 for the location of A8 frequency control (C2).
h. Turn on the DUT. Press CONTINUE.

Adjust A6A2 YTO lock (R27) and A4A2 idler lock (R16) so that the power level is approximately −15.5 dBm. When the adjustment is complete, reconnect A6 YTO phase-lock loop (W18) to its original connectors.

6. If the adjustment fails, measure the A6A4 YTO lock microcircuit and A4A3 idler VCO microcircuit for correct gain and power, respectively. If A4A3 idler VCO microcircuit power is correct, the loss in A6 YTO phase-lock loop (W18) is approximately 0.5 dB, and the voltages supplied to A6A3 idler buffer are correct, replace A6A3 idler buffer.
7. The program then measures spurs at 43 points over the 3.0 GHz to 6.6 GHz range, which takes approximately 2 minutes.
8. If the spurs are not within test limits, use the microwave source to isolate the source of the spurs. Exit the program, press RE-TEST, and when prompted for the idler source, press SYN IDL.
9. The microwave source is cabled through adapters to A6A3 idler buffer (J1), providing a clean idler signal to the YTO lock-loop circuitry. If the spurs are reduced, the source of the spurs is either the idler or FFS circuitry.

7

Module Verification Tests

This chapter contains the setups for all module verification tests that are used to optimize module performance when assemblies are changed, repaired, or adjusted. All of the setups described in this chapter are automated. These automated setups require a controller and are run with software that is described in Chapter 2.

Note

- Some of the verification tests described in this chapter require the use of an external frequency reference and some verification tests require that the spectrum analyzer and RF cable be calibrated together before running a test. For information on these items, refer to "External Frequency Reference" in Chapter 8 and "Spectrum Analyzer/RF Cable Calibration" in Chapter 8.
- You'll find instructions for constructing a 300 MHz up-converter and a sniffer loop under "300 MHz Up-Converter Construction Procedure" in Chapter 5 and "Sniffer Loop Construction Procedure" in Chapter 5.

Verification Tests

The complete list of verification tests are as follows:

"Test 01. 300 MHz Reference Output Power and Harmonics"
"Test 02. LO Output Power and Harmonics"
"Test 03. Residual FM (Span >10 MHz)"
"Test 04. LO Output Spurious Response"
"Test 05. LO Display Sidebands"
"Test 06. LO 40 kHz Sidebands"
"Test 07. Reference Oscillator Accuracy"
"Test 08. Calibrator Amplitude Accuracy"
"Test 09. 300 MHz Reference Amplitude Accuracy"
"Test 10. Video Detector Tracking"
"Test 11. External Triggering"
"Test 12. Video Processor Noise"
"Test 13. LO Frequency and Span Accuracy (Span >10 MHz)"
"Test 14. LO Span Accuracy (Phase-Locked Spans)"
"Test 15. LO Frequency Accuracy (Span ≤10 MHz)"
"Test 16. LO Frequency Error versus Sweep Time"
"Test 17. Tune + Span Output Accuracy "
"Test 18. SWP Output Accuracy "
"Test 19. HSWP Output Voltage"
"Test 20. Line Triggering"
"Test 21. LED Check"
"Test 22. Video Bandwidth"
"Test 23. 300 MHz Reference 40 kHz Sidebands"
"Test 24. Calibrator Harmonics"
"Test 25. Calibrator Output Impedance"
"Test 26. 300 MHz Reference Isolation"
"Test 27. External Reference"
"Test 28. Reference Oscillator Noise and Stability"
"Test 29. YTO Linearity"

The first 21 verification tests are known as "final tests"; they are used to verify the operation of the module. Final tests may be run either from the main menu or from the test menus. The remaining verification tests (test 22 through test 29) are not required for verifying the module's operation, but may be needed after specific repairs or adjustments.

Recommended Test Equipment

Chapter 5 has tables listing the equipment you will need to perform the verification tests. Any equipment that satisfies the critical specifications in that chapter can be substituted for the preferred test equipment. However, the HP Module Verification Software contains instrument drivers only for equipment listed in that chapter. You must write (or obtain from another source) any drivers for non-listed equipment.

Common Required Equipment

An HP 9000 Series 200/300 controller, and an HP 70001A mainframe are required for all test setups; they are not included in the equipment lists provided for each test.

Common Connections

Many of the tests require an RF and IF module configured in the mainframe as a spectrum analyzer. Figure 7-1 shows the rear panel connections required for proper operation.

Note Graphics, IF, and RF modules can be left in the mainframe during tests that require the HP 70900B local oscillator source module only. However, the test will not run if these modules cause errors or unlocks.

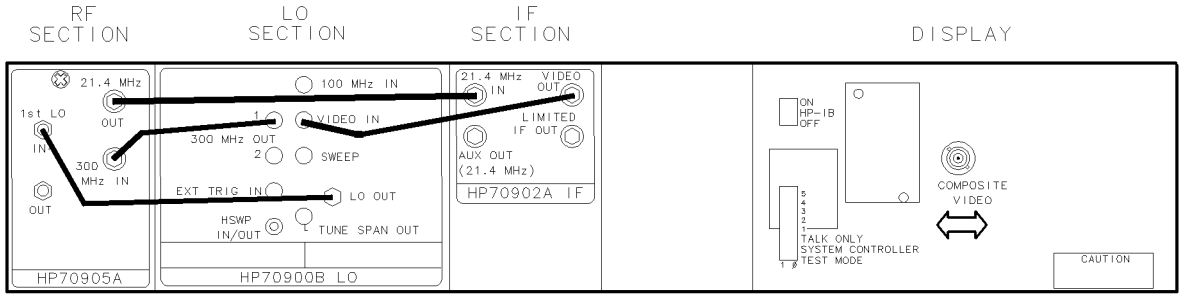

Figure 7-1. System Rear-Panel Connections

HP-IB Connections

When the Hewlett-Packard Interface Bus (HP-IB) symbol appears on a verification test setup diagram, the controller and instruments such as sources, analyzers, and counters must be linked by HP-IB.

Test Equipment Construction

Some of the verification tests require a 300 MHz up-converter and a sniffer loop. Procedures for constructing this equipment can be found in "300 MHz Up-Converter Construction Procedure" in Chapter 5 and "Sniffer Loop Construction Procedure" in Chapter 5.

The following tests use the sniffer loop:

"Test 05. LO Display Sidebands"
"Test 06. LO 40 kHz Sidebands"
"Test 23. 300 MHz Reference 40 kHz Sidebands"

Test 01. 300 MHz Reference Output Power and Harmonics

Note

- Use the 300 MHz reference accuracy test for a more accurate 300 MHz output power measurement.
- This test requires a calibrated HP 8566B spectrum analyzer. If the HP 8566B spectrum analyzer is not calibrated when the test is entered, the verification software will start a calibration procedure. Refer to "Spectrum Analyzer/RF Cable Calibration" in Chapter 8. After calibration is complete, the software will return to this test procedure.
- This test is part of the "final tests" sequence.

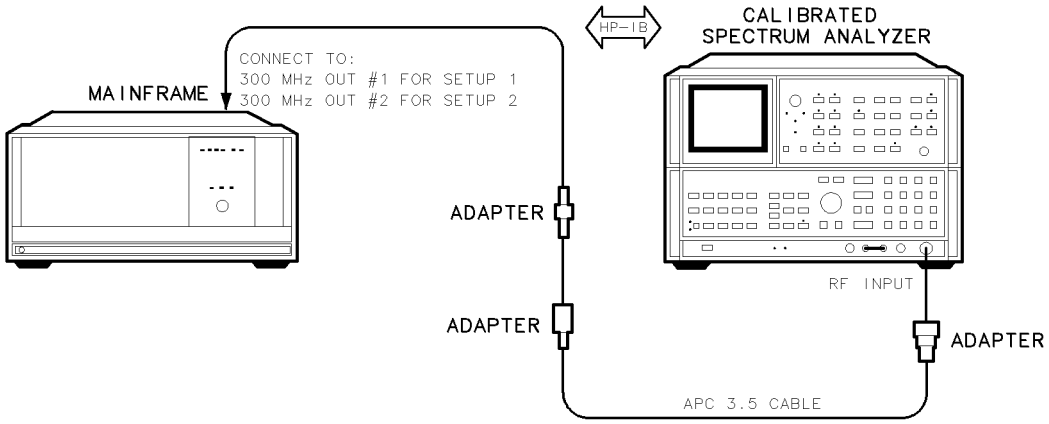

Figure 7-2. 300 MHz Reference Output Power and Harmonics Test Setup

Test Equipment	Preferred Model Numbers
Calibrated spectrum analyzer	HP 8566B spectrum analyzer
Adapter	HP 1250-1744 50Ω APC-3.5(f) to N(m)
Adapter	HP 1250-0674 50Ω SMB(m) to SMA(f)
Adapter	HP 1250-0672 50Ω SMB(f) to SMB(f)
Cable	HP 8120-4921 91 cm (35.8 in) 50Ω APC-3.5 mm(m) to APC-3.5 mm(m)

This test measures the fundamental output power and the first 10 harmonics at the 300 MHz rear panel outputs (1 and 2). The power level of the fundamental and of the harmonics, relative to the fundamental, are then compared to test limits.

1. Connect the HP 8566B spectrum analyzer's RF INPUT to the DUT's rear panel 300 MHz OUT #1 jack using the three adapters, as shown in Figure 7-2. The calibrated spectrum analyzer measures the output power of the fundamental and its first 10 harmonics, and compares this measurement to the test limits.
2. When the test on the 300 MHz OUT #1 jack is finished, connect the spectrum analyzer to the DUT's rear panel 300 MHz OUT #2 jack using the three adapters, as shown in Figure 7-2.

Test 02. LO Output Power and Harmonics

Note

- This test requires a calibrated HP 8566B spectrum analyzer. If the HP 8566B spectrum analyzer is not calibrated when the test is entered, the verification software will start a calibration procedure. Refer to "Spectrum Analyzer/RF Cable Calibration" in Chapter 8. After calibration is complete, the software will return to this test procedure.
- This test is run as part of the "final tests" sequence.

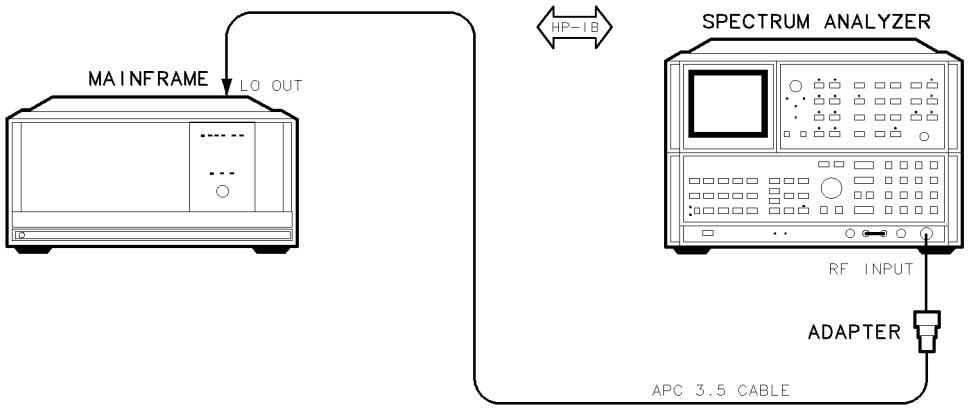

Figure 7-3. LO Output Power and Harmonics Test Setup

Test Equipment	Preferred Model Numbers
Calibrated spectrum analyzer	HP 8566B spectrum analyzer
Adapter	HP 1250-1744 50Ω APC-3.5(f) to N(m)
Cable	HP 8120-4921 91 cm (35.8 in) 50Ω APC-3.5 mm(m) to APC-3.5 mm(m)

This test measures the local oscillator output power and its first three harmonics.

1. Connect the HP 8566B spectrum analyzer's RF INPUT to the DUT's rear panel LO OUT jack using the adapter, as shown in Figure 7-3.
2. The DUT tunes to discrete CW frequencies ranging from 3 GHz to 6.6 GHz in 100 MHz steps. At each step, the calibrated spectrum analyzer measures the fundamental power, then measures the power of the fundamental's first three harmonics in dBc. Spectrum analyzer measurements are made in a 100 kHz span and a 1 kHz resolution bandwidth. Measurements are compared to test limits and displayed graphically.

Test 03. Residual FM (Span >10 MHz)

Note This test is part of the "final tests" sequence.

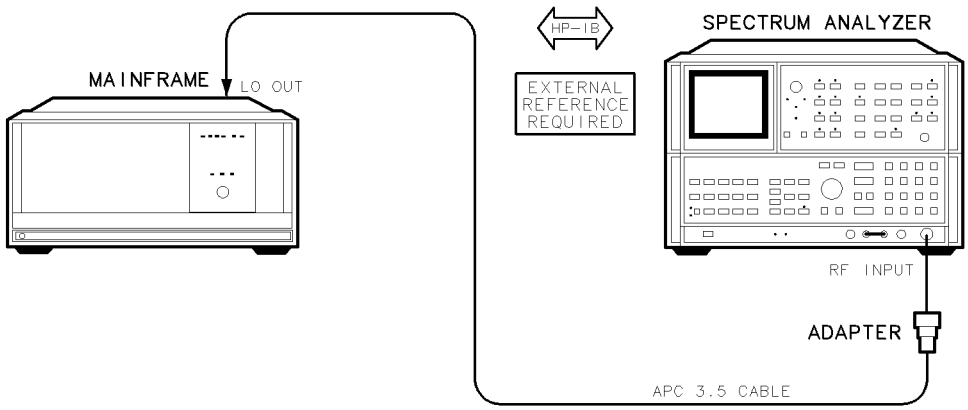

Figure 7-4. Residual FM (Span >10 MHz) Test Setup

Test Equipment	**Preferred Model Numbers**
Spectrum analyzer	HP 8566B spectrum analyzer
External reference	Refer to "External Frequency Reference" in Chapter 8.
Adapter	HP 1250-1744 50Ω APC-3.5(f) to N(m)
Cable	HP 8120-4921 91 cm (35.8 in) 50Ω APC-3.5 mm(m) to APC-3.5 mm(m)

This test measures the rear panel LO output's residual FM in spans greater than 10 MHz. The DUT is not phase-locked in these spans. This test is part of the "final tests" sequence.

1. Connect the HP 8566B spectrum analyzer's RF INPUT to the DUT's rear panel LO OUT jack using the adapter, as shown in Figure 7-4.
2. The spectrum analyzer measures residual FM in a 30 kHz resolution bandwidth. To measure the slope of the 30 kHz filter, the spectrum analyzer places delta markers 30 dB apart on the analyzer's LO feedthrough signal. This slope is calculated as the ratio of the change in frequency to the change in amplitude between the two markers. The program sets the DUT span to 10.01 MHz and initiates a single sweep. The spectrum analyzer sets the DUT's LO signal half-way down the analyzer's 30 kHz resolution bandwidth filter skirt. The spectrum analyzer center frequency is set to the frequency of the LO signal, the span is set to 0 Hz, and the sweep time is set to 1 second. A single sweep is initiated and the spectrum analyzer records 1000 trace data points. The program calculates residual FM as the trace amplitude deviation (in dB) multiplied by the measured filter slope (in kHz/dB). If residual FM fails the test limits, the 1000 data points are divided into 10 segments of 100 data points each. The residual FM is then recalculated for each of the 10 segments and compared to the test limits. Recalculating residual FM in 10% segments adjusts for errors due to LO frequency drift.

Test 04. LO Output Spurious Response

Note

- This test requires a calibrated HP 8566B spectrum analyzer. If the HP 8566B spectrum analyzer is not calibrated when the test is entered, the verification software will start a calibration procedure. Refer to "Spectrum Analyzer/RF Cable Calibration" in Chapter 8. After calibration is complete, the software will return to this test procedure.
- This test is part of the "final tests" sequence.

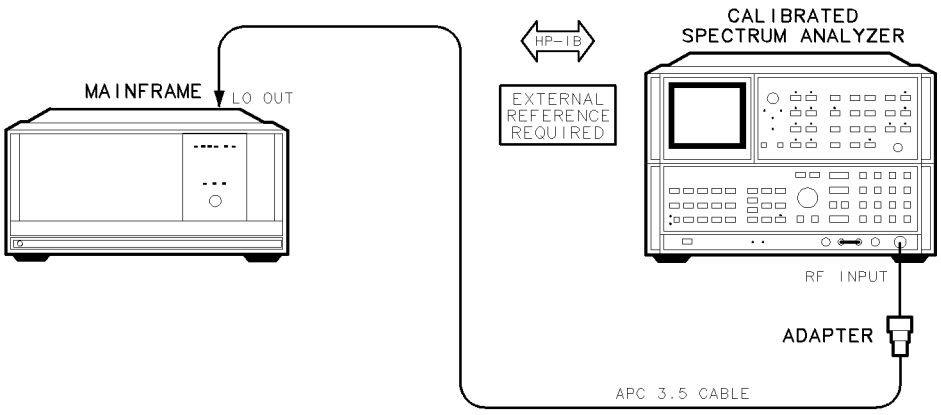

Figure 7-5. LO Output Spurious Response Test Setup

Test Equipment	Preferred Model Numbers
Calibrated spectrum analyzer	HP 8566B spectrum analyzer
External reference	Refer to "External Frequency Reference" in Chapter 8.
Adapter	HP 1250-1744 50Ω APC-3.5(f) to N(m)
Cable	HP 8120-4921 91 cm (35.8 in) 50Ω APC-3.5 mm(m) to APC-3.5 mm(m)

This test measures phase-lock-related spurious responses on the rear panel, LO-output jack.

1. Connect the HP 8566B spectrum analyzer's RF INPUT, with the external reference, to the DUT's rear panel LO jack using the adapter, as shown in Figure 7-5.
2. The spectrum analyzer measures each synthesis-related spurious signal with the following method. The program sets the analyzer to a 0 Hz span, 30 Hz resolution bandwidth, and 500 ms sweep time. The analyzer tunes to the spurious signal, then performs an average of the trace amplitude. If the average value fails the test limit, the analyzer performs trace averaging again at an increased sweep time of 3 seconds. If the value still fails the test limits, the analyzer performs five video averages at a decreased resolution bandwidth of 10 Hz and a decreased span of 100 Hz. If the value again fails the test limit, the test fails.

Note

If the HP 70900B local oscillator source's LO output amplitude falls below −3 dBm on the calibrated spectrum analyzer, the message `The CAL'D SPEC ANALYZER found carrier power <−3 dBm` results. The test will not proceed until the power is greater than −3 dBm.

Test 04. LO Output Spurious Response

The program checks two sources of spurious signals:

a. The YTO lock loop, which generates YTO lock spurs. To locate these signals, the program increases the LO frequency from 3 GHz to 6.6 GHz in 12.5 MHz increments. At each frequency, the program tunes the LO frequency to create a sideband 30 kHz away from the LO signal. The spectrum analyzer measures each spurious response relative to the carrier. Even though the 10 kHz sidebands are purposely created, the sideband should pass the test.

b. The idler lock circuitry, which creates idler spurs. The program tunes the LO to predetermined frequencies from 3 GHz to 6.6 GHz. These frequencies cause 30 kHz sidebands on the idler signal, which translate directly to the LO signal.

Test 05. LO Display Sidebands

Note

- This test requires a calibrated HP 8566B spectrum analyzer. If the HP 8566B spectrum analyzer is not calibrated when the test is entered, the verification software will start a calibration procedure. Refer to "Spectrum Analyzer/RF Cable Calibration" in Chapter 8. After calibration is complete, the software will return to this test procedure.
- This test is part of the "final tests" sequence.

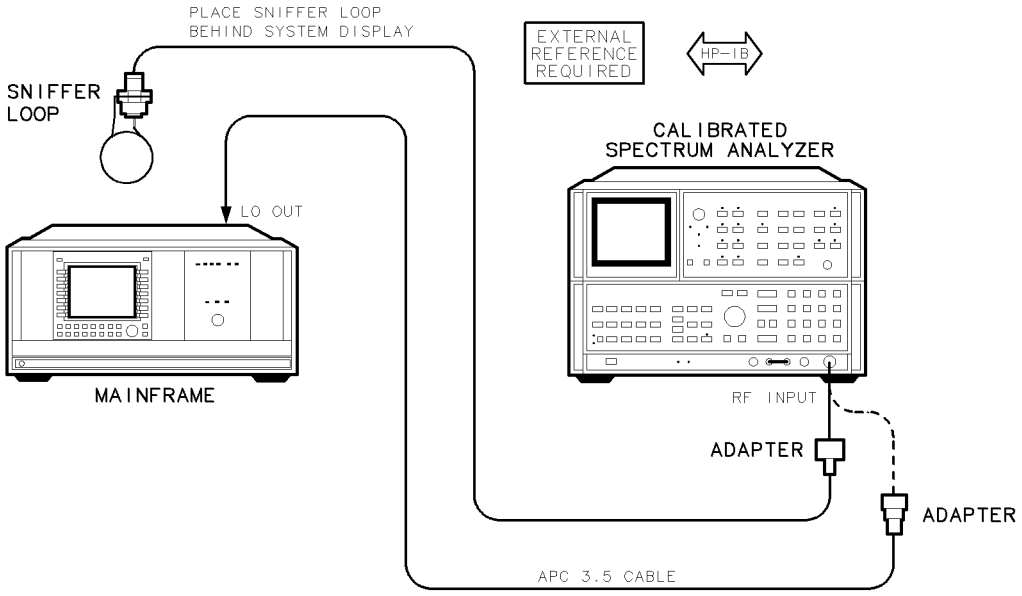

Figure 7-6. LO Display Sidebands Test Setup

Test Equipment	Preferred Model Numbers
Graphics display	HP 70205A graphics display
Calibrated spectrum analyzer	HP 8566B spectrum analyzer
External reference	Refer to "External Frequency Reference" in Chapter 8.
Sniffer loop	Refer to "Sniffer Loop Construction Procedure" in Chapter 5.
Adapter	HP 1250-1744 50Ω APC-3.5(f) to N(m)
Adapter	HP 1250-1476 precision 50Ω N(m) to BNC(f)
Cable	HP 8120-4921 91 cm (35.8 in) 50Ω APC-3.5 mm(m) to APC-3.5 mm(m)
Cable	HP 8120-1840 122 cm (48 in) 50Ω coaxial BNC(m) to BNC(m)

This test measures sidebands on the LO signal that result from emissions radiating from the HP 70205A graphics display or HP 70004A color display.

1. Connect the HP 8566B spectrum analyzer's RF INPUT to the DUT's LO OUT using the adapter, as shown in Figure 7-6.
2. Connect the sniffer loop to the spectrum analyzers's RF INPUT using the adapter, as shown in Figure 7-6.

Test 05. LO Display Sidebands

3. Place the sniffer loop behind the graphics display. The sniffer loop picks up emissions radiating from the display, then the spectrum analyzer measures the emissions greater than −90 dBm. The program tunes the DUT's LO to CW frequencies of 3.1 GHz, 4.5 GHz, and 6.5 GHz. The spectrum analyzer is set to a span of 1 kHz and a resolution bandwidth of 10 Hz. At each LO frequency, the spectrum analyzer measures the power of the first three upper sidebands in dBc. The program uses video averaging on sidebands that exceed the test limits. To decrease test time, the analyzer tunes each sideband to within the first three display divisions, then sweeps only these three divisions.

Test 06. LO 40 kHz Sidebands

Note

- This test requires a calibrated HP 8566B spectrum analyzer. If the HP 8566B spectrum analyzer is not calibrated when the test is entered, the verification software will start a calibration procedure. Refer to "Spectrum Analyzer/RF Cable Calibration" in Chapter 8. After calibration is complete, the software will return to this test procedure.
- This test is part of the "final tests" sequence.

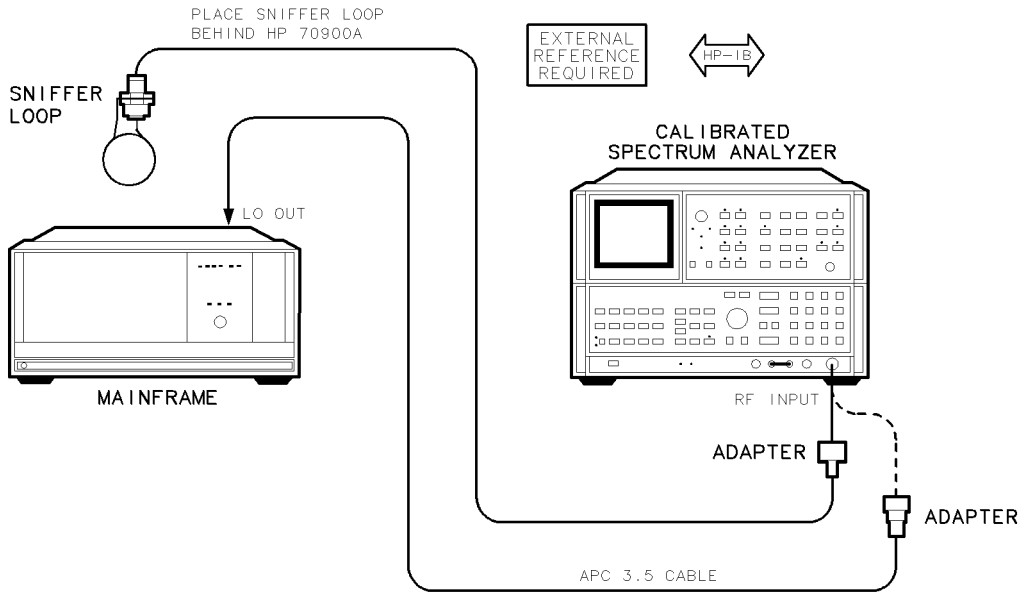

Figure 7-7. LO 40 kHz Sidebands Test Setup

Test Equipment	Preferred Model Numbers
Calibrated spectrum analyzer	HP 8566B spectrum analyzer
External reference	Refer to "External Frequency Reference" in Chapter 8.
Sniffer loop	Refer to "Sniffer Loop Construction Procedure" in Chapter 5.
Adapter	HP 1250-1744 50Ω APC-3.5(f) to N(m)
Adapter	HP 1250-1476 precision 50Ω N(m) to BNC(f)
Cable	HP 8120-4921 91 cm (35.8 in) 50Ω APC-3.5 mm(m) to APC-3.5 mm(m)
Cable	HP 8120-1840 122 cm (48 in) 50Ω coaxial BNC(m) to BNC(m)

This test measures 40 kHz sidebands on the LO signal. These sidebands result from emissions radiating from the 40 kHz switching power supply in the HP 70004A color display or HP 70001A mainframe.

1. Connect the HP 8566B spectrum analyzer's RF INPUT using the adapter to the DUT's LO OUT, as shown in Figure 7-7.
2. Connect the sniffer loop to the spectrum analyzer's RF INPUT using the adapter, as shown in Figure 7-7.

Test 06. LO 40 kHz Sidebands

3. Place the sniffer loop near the rear of the mainframe (the sniffer loop must be very close to the mainframe). The sniffer loop receives emissions radiating from the 40 kHz power supply that are then measured by the spectrum analyzer. This test measures emissions greater than −90 dBm.
4. The program tunes the DUT's LO to CW frequencies of 3.1 GHz, 4.5 GHz, and 6.5 GHz. The spectrum analyzer is set to a span of 1 kHz and a resolution bandwidth of 10 Hz. At each LO frequency, the spectrum analyzer measures the power of the first three upper 40 kHz sidebands in dBc. The program uses video averaging on sidebands that exceed the test limits. To decrease test time, the analyzer tunes each sideband to within the first three display divisions, then sweeps only these three divisions.

Test 07. Reference Oscillator Accuracy

Note

- This test requires a calibrated HP 8566B spectrum analyzer. If the HP 8566B spectrum analyzer is not calibrated when the test is entered, the verification software will start a calibration procedure. Refer to "Spectrum Analyzer/RF Cable Calibration" in Chapter 8. After calibration is complete, the software will return to this test procedure.
- Disconnect the external 100 MHz reference from the HP 70900B local oscillator source.
- This test is part of the "final tests" sequence.

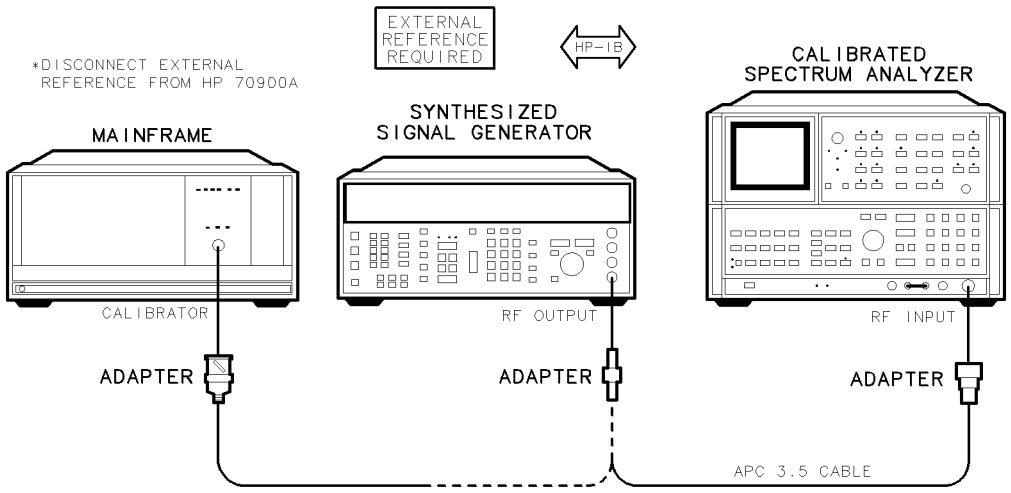

Figure 7-8. Reference Oscillator Accuracy Test Setup

Test Equipment	**Preferred Model Numbers**
Calibrated spectrum analyzer	HP 8566B spectrum analyzer
External reference	Refer to "External Frequency Reference" in Chapter 8.
Synthesized source	HP 8663A synthesized signal generator
Adapter	HP 1250-1744 50Ω APC-3.5(f) to N(m)
Adapter	HP 5061-5311 50Ω APC-3.5(f) to APC-3.5(f)
Adapter	HP 1250-2015 50Ω SMA(f) to BNC(m)
Cable	HP 8120-4921 91 cm (35.8 in) 50Ω APC-3.5 mm(m) to APC-3.5 mm(m)

This test measures the frequency accuracy of the 300 MHz calibrator. It is also an indirect frequency measurement of the DUT's internal 100 MHz oscillator.

1. Connect the HP 8663A synthesized signal generator's RF OUTPUT to the HP 8566A spectrum analyzer's RF INPUT using the adapter, as shown in Figure 7-8. Don't connect the DUT to the external frequency reference.
2. Connect the synthesized source and spectrum analyzer to the external frequency reference. The program uses the output from the synthesized source to measure the spectrum analyzer's frequency readout error. Because the frequency error of the synthesized source is negligible, any frequency error is due to the analyzer.

3. After measuring and adjusting for this frequency error, connect the DUT to the spectrum analyzer's RF INPUT using the adapters, as shown in Figure 7-8. The spectrum analyzer then measures the frequency of the 300 MHz calibrator.

Test 08. Calibrator Amplitude Accuracy

Note This test is part of the "final tests" sequence.

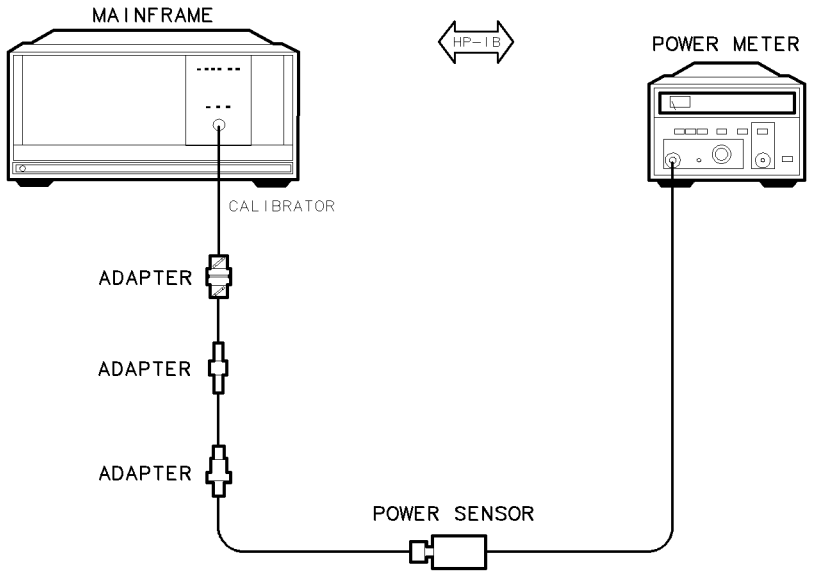

Figure 7-9. Calibrator Amplitude Accuracy Test Setup

Test Equipment	**Preferred Model Numbers**
Power meter	HP 437B power meter
Power sensor	HP 8485A APC-3.5 mm(m) power sensor
Adapter	HP 1250-0216 50Ω BNC(m) to BNC(m)
Adapter	HP 1250-1200 50Ω SMA(m) to BNC(f)
Adapter	HP 5061-5311 50Ω APC-3.5(f) to APC-3.5(f)

This test measures the output amplitude of the 300 MHz calibrator.

1. Connect the HP 437B power meter and HP 8485A APC-3.5 mm(m) power sensor to the DUT using the adapters, as shown in Figure 7-9.

Test 09. 300 MHz Reference Amplitude Accuracy

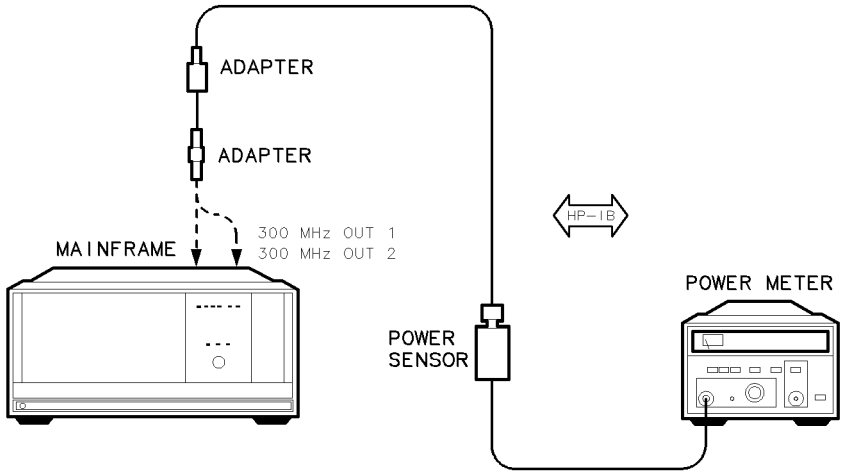

Figure 7-10. 300 MHz Reference Amplitude Accuracy Test Setup

Test Equipment	**Preferred Model Numbers**
Power meter	HP 437B power meter
Power sensor	HP 8485A APC-3.5 mm(m) power sensor
Adapter	HP 1250-0674 50Ω SMB(m) to SMA(f)
Adapter	HP 1250-0672 50Ω SMB(f) to SMB(f)

This test measures the output power of the two rear panel 300 MHz OUT #1 and #2 references.

1. Connect the HP 437B power meter and HP 8485A APC-3.5 mm(m) power sensor to the DUT using the adapters, as shown in Figure 7-10.

Test 10. Video Detector Tracking

Note This test is part of the "final tests" sequence.

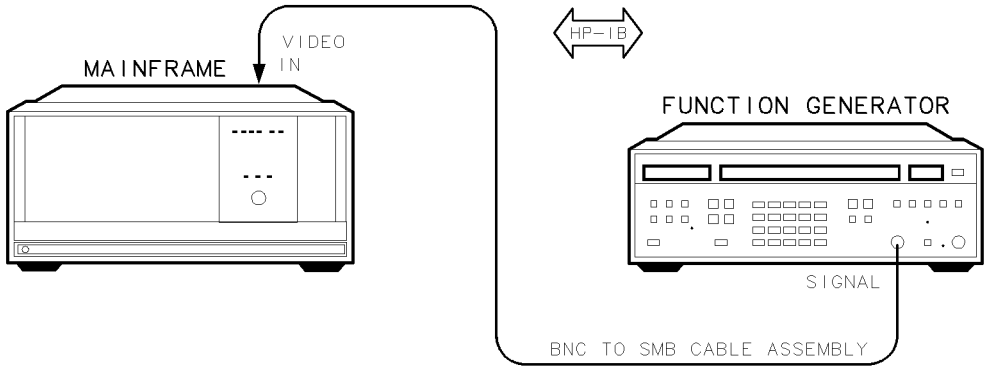

Figure 7-11. Video Detector Tracking Test Setup

Test Equipment	**Preferred Model Numbers**
Function generator	HP 3325B synthesized function/sweep generator
Cable	HP 85680-60093 123 cm (48.4 in) 50Ω BNC(m) to SMB(f)

Video detector operation is verified and the voltage variation between video detection methods is measured. The video detection methods available are sample, positive peak, negative peak, and Rosenfell. Rosenfell is the normal or default detection scheme.

1. Connect the HP 3325B synthesized function/sweep generator's SIGNAL output to the DUT's rear panel VIDEO IN jack using the BNC-to-SMB cable assembly, as shown in Figure 7-11.
2. The program uses a function generator set to 1 Vdc as a known video signal. The program tests response variations among sample, positive peak, negative peak, and Rosenfell detection. The program averages each detector voltage over 10 sweeps.

Test 11. External Triggering

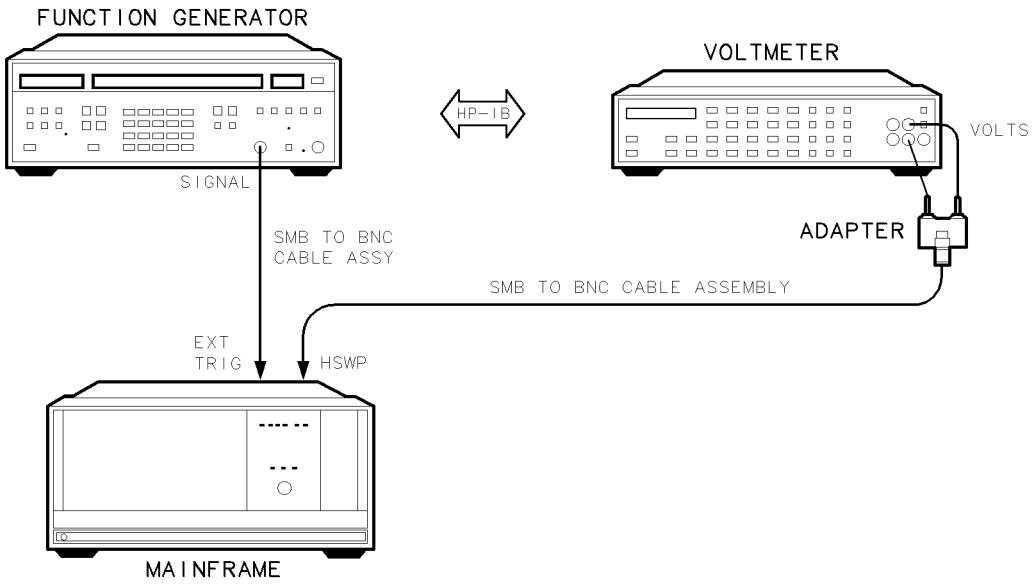

Figure 7-12. External Triggering Test Setup

Test Equipment	**Preferred Model Numbers**
Function generator	HP 3325B synthesized function/sweep generator
Precision digital voltmeter	HP 3456A digital multimeter
Adapter	HP 1251-2277 50Ω BNC(f) to dual banana plug
Cable *(2 required)*	HP 85680-60093 123 cm (48.4 in) 50Ω BNC(m) to SMB(f)

This test checks the external-triggering circuit.

1. Connect the HP 3325B synthesized function/sweep generator's SIGNAL output to the DUT's EXT TRIG input, as shown in Figure 7-12.
2. Connect the HP 3456A digital multimeter to the DUT's HSWP output using the adapter, as shown in Figure 7-12.
3. The program sets the DUT to external-triggering mode. A 100 Hz square wave from the function generator is used as an external triggering signal. The voltmeter monitors the HSWP voltage to verify that the DUT sweeps when triggered.

Test 12. Video Processor Noise

Note This test is part of the "final tests" sequence.

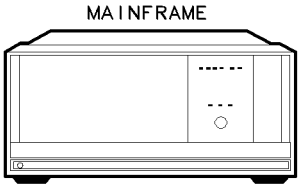

Figure 7-13. Test Setup for Test 12. Video Processor Noise

This test measures noise generated by the A2 video processor. Video processor noise affects amplitude accuracy and trace-measurement repeatability.

1. Insert the DUT into the HP 70001A mainframe.
2. Disconnect any input to the DUT's rear panel VIDEO jack.
3. The program sets the DUT to a 300 MHz center frequency, 0 Hz span, and normal video detection. A single sweep is initiated and 800 trace data points are recorded. The difference between the minimum and maximum trace-amplitude variations is compared to the test limit.

Test 13. LO Frequency and Span Accuracy (Span >10 MHz)

Note This test is part of the "final tests" sequence.

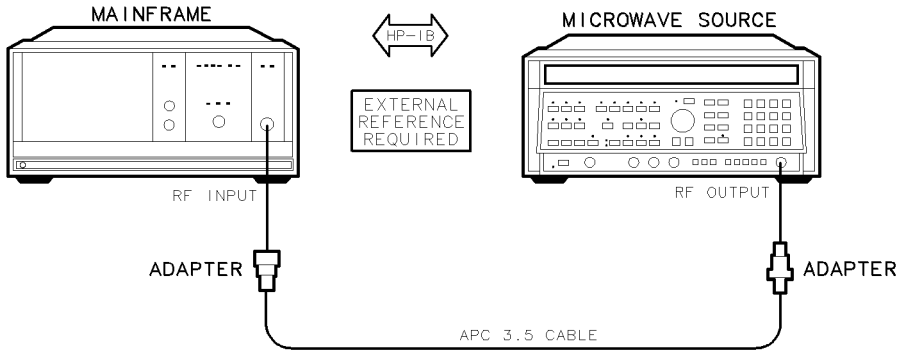

Figure 7-14. LO Frequency and Span Accuracy (Span >10 MHz) Test Setup

Test Equipment	**Preferred Model Numbers**
RF section	HP 70905A RF section, HP 70906A RF section, or HP 70908A RF section
IF section	HP 70902A IF section or HP 70903A IF section
Microwave source	HP 8340A/B synthesized sweeper
External reference	Refer to "External Frequency Reference" in Chapter 8.
Adapter	HP 1250-1744 50Ω APC-3.5(f) to N(m)
Adapter	HP 5061-5311 50Ω APC-3.5(f) to APC-3.5(f)
Cable	HP 8120-4921 91 cm (35.8 in) 50Ω APC-3.5 mm(m) to APC-3.5 mm(m)

This test measures the center-frequency readout accuracy for spans greater than 10 MHz. In these spans, the DUT is phase-locked between sweeps.

This test also measures the span accuracy of spans greater than 10 MHz. Spans greater than 10 MHz use nonsynthesized, "lock and roll" tuning.

1. Connect the HP 8340A/B synthesized sweeper's RF OUTPUT to the DUT's RF INPUT using the adapter as shown in Figure 7-14. Refer to Figure 7-1 for system rear panel connections.
2. The program tunes the DUT to four frequencies ranging from 46 MHz to 2946 MHz. Each frequency is tested in five spans: 10.5 MHz, 110 MHz, 400 MHz, 1.1 GHz, and 2850 MHz. Each span is tested at three different sweep times. For each span setting, the microwave source tunes a signal across the DUT's span in various increments. The program measures the frequency of this signal in the system and compares it to the microwave source. This gives the frequency error of each signal. Span error percent is calculated as the difference of the worst case frequency errors in a span divided by the DUT span setting.

Test 14. LO Span Accuracy (Phase-Locked Spans)

Note This test is part of the "final tests" sequence.

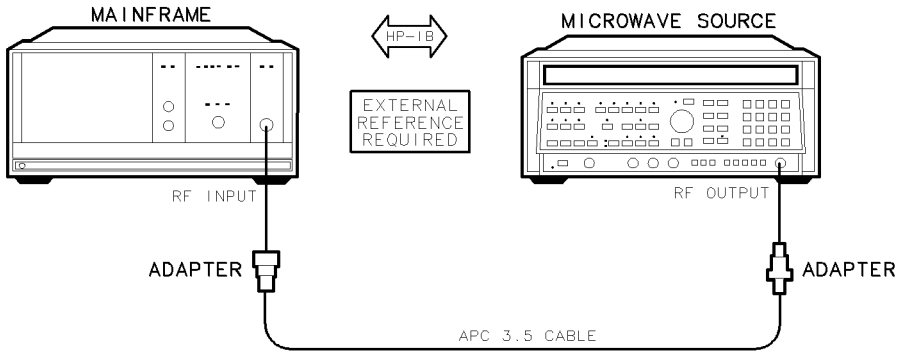

Figure 7-15. LO Span Accuracy (Phase-Locked Spans) Test Setup

Test Equipment	Preferred Model Numbers
RF section	HP 70905A RF section, HP 70906A RF section, or HP 70908A RF section
IF section	HP 70902A IF section
Microwave source	HP 8340A/B synthesized sweeper
External reference	Refer to "External Frequency Reference" in Chapter 8.
Adapter	HP 1250-1744 50Ω APC-3.5(f) to N(m)
Adapter	HP 5061-5311 50Ω APC-3.5(f) to APC-3.5(f)
Cable	HP 8120-4921 91 cm (35.8 in) 50Ω APC-3.5 mm(m) to APC-3.5 mm(m)

This test measures span accuracy for spans less than or equal to 10 MHz. The spans are phase-locked by the DUT fractional frequency synthesizer circuit.

1. Connect the HP 8340A/B synthesized sweeper RF OUTPUT to the DUT's RF INPUT using the adapters as shown in Figure 7-15. Refer to Figure 7-1 for system rear panel connections.
2. The program tunes the DUT to approximately 4 GHz and sets it to eight different spans. For each span setting, the microwave source tunes a signal across the DUT's span at 30, 50, and 70 percent of span increments. If a graphics display is present, the signal will appear at the third, fifth, and seventh major divisions. The program measures the frequency of the signal in the system and compares it to the microwave source. This gives the frequency error introduced by the LO. Span accuracy is calculated three times in each span: from division 3 to division 5, division 3 to division 7, and division 5 to division 7.

Test 15. LO Frequency Accuracy (Span ≤10 MHz)

Note This test is part of the "final tests" sequence.

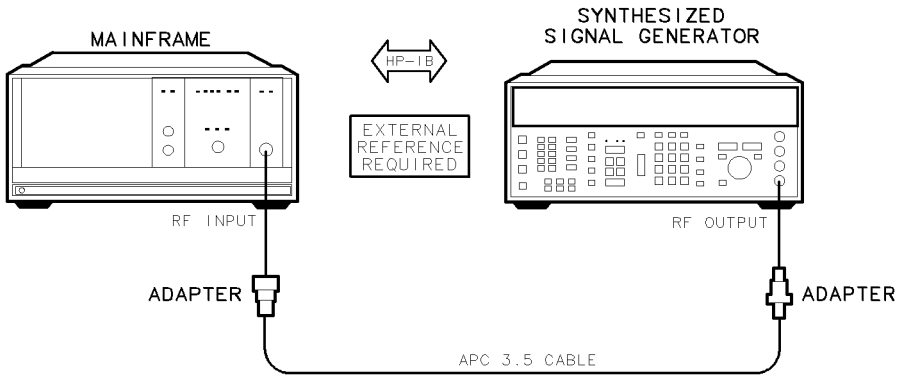

Figure 7-16. LO Frequency Accuracy (Span ≤10 MHz) Test Setup

Test Equipment	**Preferred Model Numbers**
RF section	HP 70904A RF section or HP 70905A RF section
RF section	or HP 70906A RF section or HP 70908A RF section
IF section	HP 70902A IF section or HP 70903A IF section
Synthesized source	HP 8663A synthesized signal generator
External reference	Refer to "External Frequency Reference" in Chapter 8.
Adapter	HP 1250-1744 50Ω APC-3.5(f) to N(m)
Adapter	HP 5061-5311 50Ω APC-3.5(f) to APC-3.5(f)
Cable	HP 8120-4921 91 cm (35.8 in) 50Ω APC-3.5 mm(m) to APC-3.5 mm(m)

This test measures the center-frequency readout accuracy for spans less than or equal to 10 MHz. In these spans, the DUT uses synthesized sweeps.

1. Connect the HP 8663A synthesized signal generator's RF OUTPUT to the DUT's RF INPUT using the adapters, as shown in Figure 7-16. Refer to Figure 7-1 for system rear panel connections.
2. The synthesized source provides a signal with a precise frequency for testing. The program tunes the microwave source and the HP 70000 Series modular spectrum analyzer system to 300 MHz. To ensure an accurate measurement, the test measures IF module frequency errors and subtracts these errors from the test results. To determine LO frequency accuracy, the DUT measures the frequency of the input signal in five spans between 1 kHz and 10 MHz. The frequency difference between the DUT's readout and the signal, minus the errors caused by the IF, gives the frequency readout error. Ratios between the frequency readout errors and the spans are calculated, expressed as percentages, and compared to the test limits.

Test 16. LO Frequency Error versus Sweep Time

Note This test is part of the "final tests" sequence.

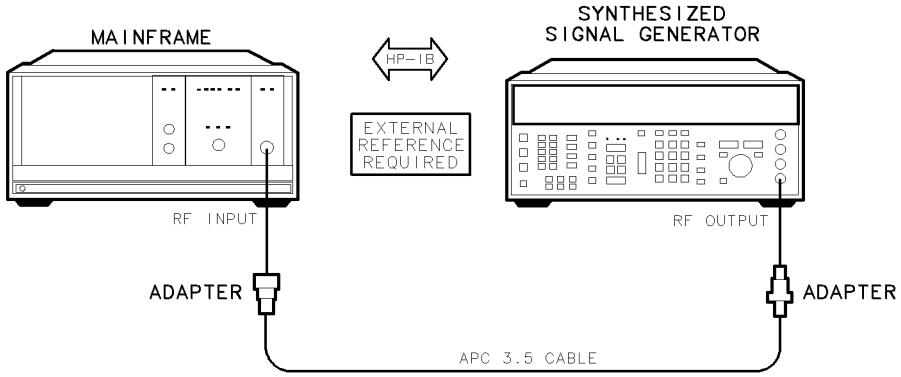

Figure 7-17. LO Frequency Error versus Sweep Time Test Setup

Test Equipment	**Preferred Model Numbers**
RF section	HP 70904A RF section or HP 70905A RF section
RF section	or HP 70906A RF section or HP 70908A RF section
IF section	HP 70902A IF section or HP 70903A IF section
Synthesized source	HP 8663A synthesized signal generator
External reference	Refer to "External Frequency Reference" in Chapter 8.
Adapter	HP 1250-1744 50Ω APC-3.5(f) to N(m)
Adapter	HP 5061-5311 50Ω APC-3.5(f) to APC-3.5(f)
Cable	HP 8120-4921 91 cm (35.8 in) 50Ω APC-3.5 mm(m) to APC-3.5 mm(m)

This test verifies that the sweep circuitry does not affect span and frequency accuracy.

1. Connect the HP 8663A synthesized signal generator's RF OUTPUT to the DUT's RF INPUT using the adapters as shown in Figure 7-17. Refer to Figure 7-1 for system rear panel connections.
2. The program sets the DUT center frequency to 500 MHz and the span to 300 MHz. The span and frequency are measured at sweep times of 50 ms, 500 ms, 5 s, and 50 s. Span and frequency errors for each sweep time are computed and normalized to the 500 ms sweep-time measurements. Any remaining error results from the sweep-time circuitry.

Test 17. Tune + Span Output Accuracy

Note This test is part of the "final tests" sequence.

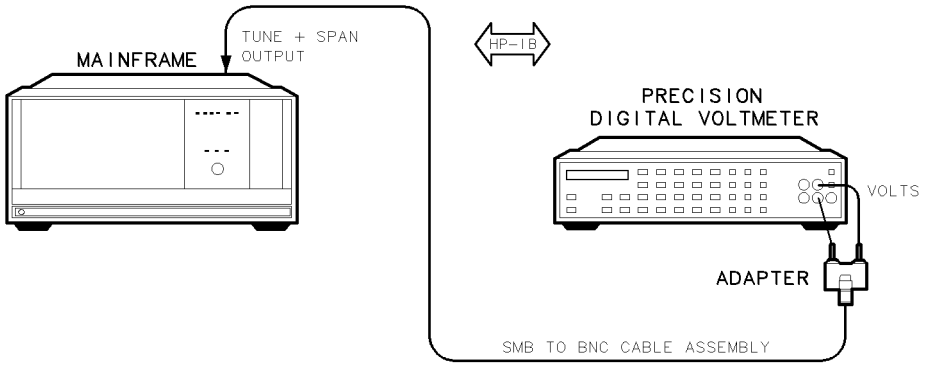

Figure 7-18. Tune + Span Output Accuracy Test Setup

Test Equipment	**Preferred Model Numbers**
Precision digital voltmeter	HP 3456A digital multimeter
Adapter	HP 1251-2277 50Ω BNC(f) to dual banana plug
Cable	HP 85680-60093 123 cm (48.4 in) 50Ω BNC(m) to SMB(f)

This test measures the rear panel TUNE SPAN voltage.

1. Connect the HP 3456A digital multimeter to the DUT's TUNE + SPAN OUTPUT using the adapter and SMB-to-BNC cable assembly, as shown in Figure 7-18.
2. The DUT's LO signal tunes in 150 MHz steps from 3 GHz to 6.45 GHz. At each frequency the voltmeter measures the TUNE SPAN voltage. The expected TUNE SPAN voltage is calculated as the DUT's LO frequency multiplied by 1.5 V/GHz. The difference between the measured and expected values are compared to test limits.

Test 18. SWP Output Accuracy

Note This test is part of the "final tests" sequence.

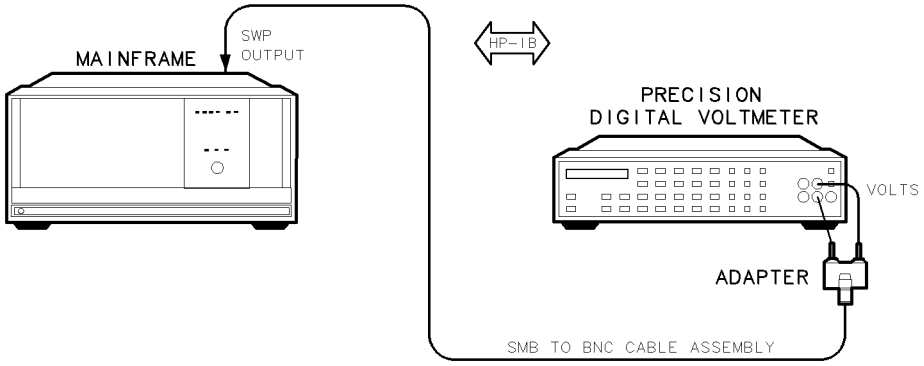

Figure 7-19. SWP Output Accuracy Test Setup

Test Equipment	**Preferred Model Numbers**
Precision digital voltmeter	HP 3456A digital multimeter
Adapter	HP 1251-2277 50Ω BNC(f) to dual banana plug
Cable	HP 85680-60093 123 cm (48.4 in) 50Ω BNC(m) to SMB(f)

This test measure rear panel SWP voltage.

1. Connect the HP 3456A digital multimeter to the DUT's SWP OUTPUT using the adapter and the HP 85680-60093 123 cm (48.4 in) 50Ω BNC(m) to SMB(f), as shown in Figure 7-19.
2. The DUT is tuned to 3 GHz and a 0 Hz span. The program initiates a 10-second sweep, producing a 0 to 10 V SWP ramp. Every 500 milliseconds the voltmeter records the rear panel SWP voltage and calculates the slope ($\Delta V/\Delta T$) from the last measurement. The difference between the measured and expected slope is expressed as a percentage and compared to test limits. The sweep-ramp offset error is determined by comparing the voltage at the end of the sweep to 10 V.

Test 19. HSWP Output Voltage

Note This test is part of the "final tests" sequence.

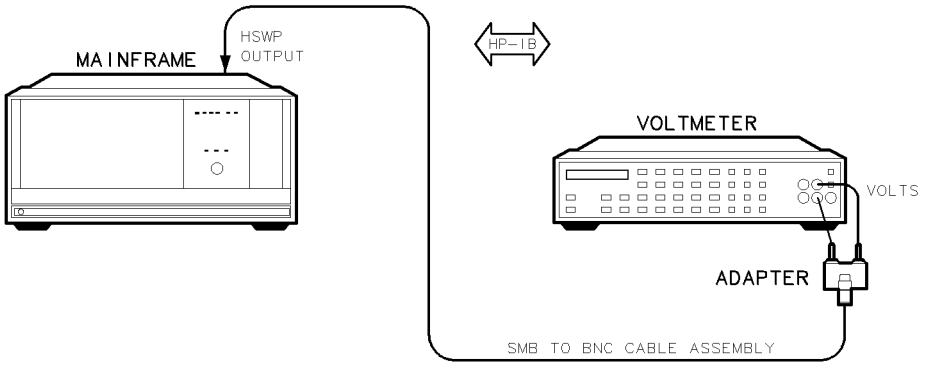

Figure 7-20. HSWP Output Voltage Test Setup

Test Equipment	**Preferred Model Numbers**
Precision digital voltmeter	HP 3456A digital multimeter
Adapter	HP 1251-2277 50Ω BNC(f) to dual banana plug
Cable	HP 85680-60093 123 cm (48.4 in) 50Ω BNC(m) to SMB(f)

The TTL levels at the rear panel HSWP output are measured. The HSWP voltage is low between sweeps and high during sweeps.

1. Connect the HP 3456A digital multimeter to the DUT's HSWP OUTPUT using the adapter as shown in Figure 7-20.
2. The voltmeter measures the HSWP TTL levels while the program controls the DUT's sweep.

Test 20. Line Triggering

Note

- This is a manual test. The HP Module Verification Software prompts the user to refer to this test description.
- This test is part of the "final tests" sequence.

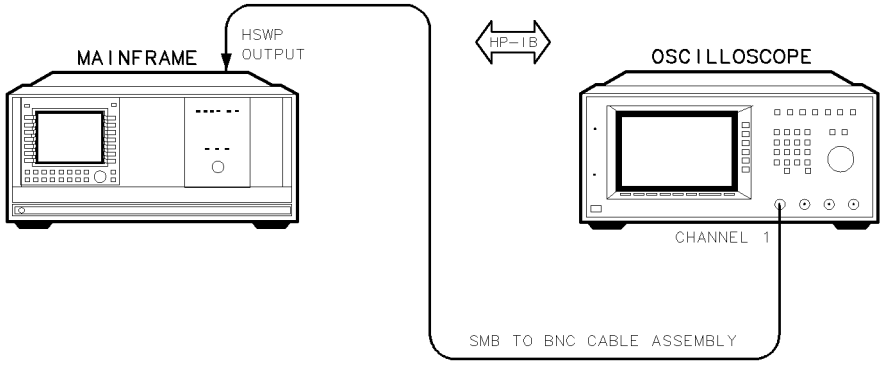

Figure 7-21. Line Triggering Test Setup

Test Equipment	Preferred Model Numbers
Graphics display	HP 70205A graphics display or HP 70206A system graphics display
Oscilloscope	HP 54503A digitizing oscilloscope
Cable	HP 85680-60093 123 cm (48.4 in) 50Ω BNC(m) to SMB(f)

This manual test verifies line-triggering operation.

An oscilloscope is used to monitor the rear panel HSWP waveform during line triggering. If functioning correctly, the signal will be stable.

1. Set the graphics display's controls as follows:

Span	0 Hz
Trace length A	50
Sweep time	8 ms
Trigger	Line

2. Set the oscilloscope's controls as follows:

Volts/div	2
Seconds/div	8 ms
Trigger	Line
Channel 1	On, DC Coupled

3. Connect the HP 54503A digitizing oscilloscope's CHANNEL 1 INPUT to the DUT's HSWP OUTPUT using the SMB-to-BNC cable assembly, as shown in Figure 7-21. The oscilloscope will display a 50 ms square wave with 8 ms, 5 V positive peaks.
4. Adjust the oscilloscope triggering level and sweep time for a stable display.

5. On the graphics display, press `TRIGGER FREE`. Verify that the oscilloscope waveform drifts.
   On the graphics display press `TRIGGER LINE`. If the displayed waveform is stable, the DUT passes the test.

Test 21. LED Check

This test verifies the proper front panel LED operation.

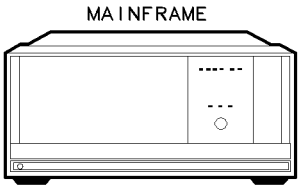

main1_d

Figure 7-22. Test Setup for Test 21. LED Check

1. Install the DUT into the HP 70001A mainframe.
2. This test sends commands to turn front panel LEDs on and off. A total of 28 LED patterns are displayed on the DUT. The user is prompted to observe and verify that the correct LED patterns appear.

Test 22. Video Bandwidth

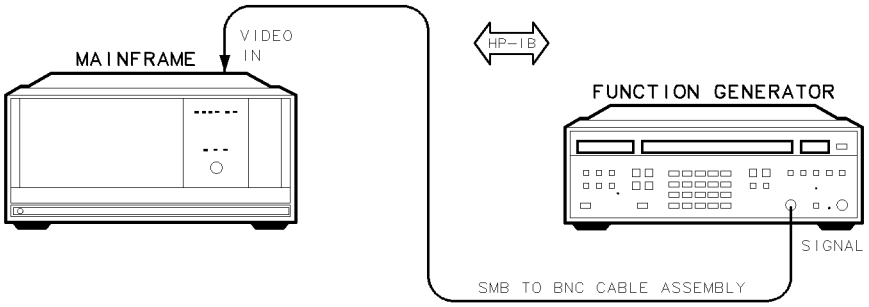

Figure 7-23. Video Bandwidth Test Setup

Test Equipment	**Preferred Model Numbers**
Function generator	HP 3325B synthesized function/sweep generator
Cable	HP 85680-60093 123 cm (48.4 in) 50Ω BNC(m) to SMB(f)

This test measures the bandwidths of the positive and negative peak detectors.

1. Connect the HP 3325B synthesized function/sweep generator's SIGNAL output to the DUT's VIDEO IN using the SMB-to-BNC cable assembly, as shown in Figure 7-23.
2. The program sets the function generator for a 1.8 V peak-to-peak, 1 kHz sine wave with a 1 Vdc offset. The DUT is set to a 0 Hz span, 50 ms sweep time, and positive-peak detection. The test records 800 trace data points, averages the data, and subtracts the average from each data point. This mathematically removes the DC offset. The maximum data point is considered the reference trace value. The test remeasures the data points with the function generator increased to 5 MHz and mathematically removes the DC offset. The frequency response of the positive-peak detector circuitry is determined by comparing the maximum trace point to the maximum reference-trace value. The program repeats the procedure at 4 MHz using negative-peak detection.

Test 23. 300 MHz Reference 40 kHz Sidebands

Note This test requires a calibrated HP 8566B spectrum analyzer. If the HP 8566B spectrum analyzer is not calibrated when the test is entered, the verification software will start a calibration procedure. Refer to "Spectrum Analyzer/RF Cable Calibration" in Chapter 8. After calibration is complete, the software will return to this test procedure.

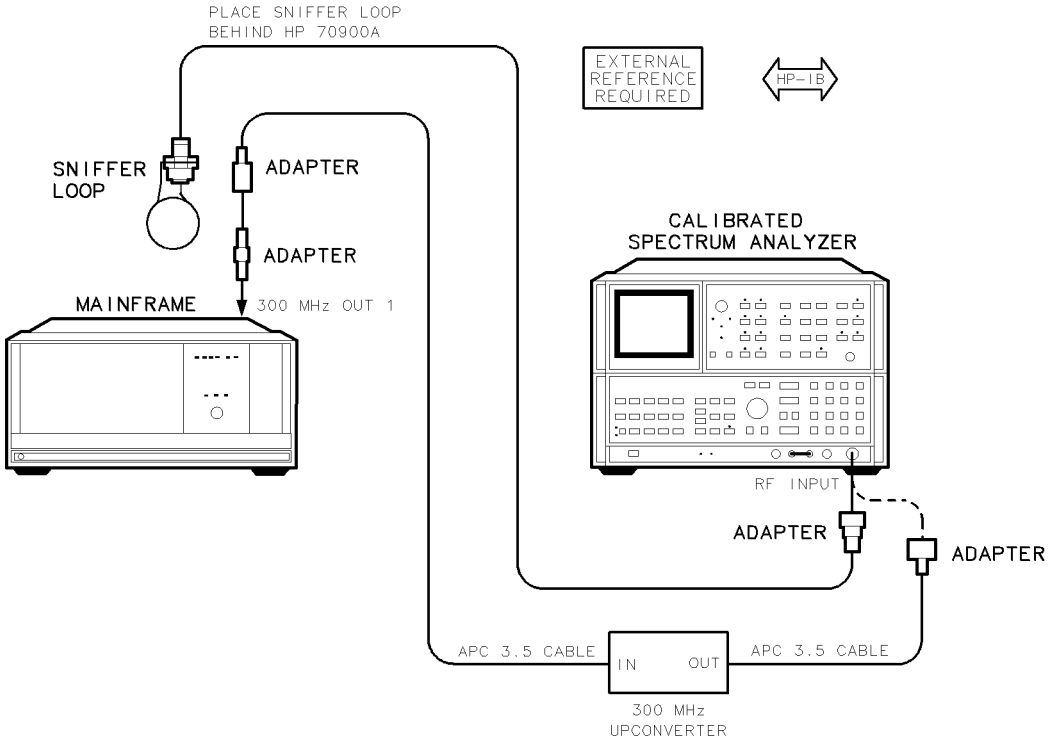

Figure 7-24. 300 MHz Reference 40 kHz Sidebands Test Setup

Test Equipment	**Preferred Model Numbers**
Calibrated spectrum analyzer	HP 8566B spectrum analyzer
External reference	Refer to "External Frequency Reference" in Chapter 8.
Sniffer loop	Refer to "Sniffer Loop Construction Procedure" in Chapter 5.
300 MHz up-converter	Refer to "300 MHz Up-Converter Construction Procedure" in Chapter 5.
Adapter	HP 1250-1744 50Ω APC-3.5(f) to N(m)
Adapter	HP 1250-1476 precision 50Ω N(m) to BNC(f)
Adapter	HP 1250-0674 50Ω SMB(m) to SMA(f)
Adapter	HP 1250-0672 50Ω SMB(f) to SMB(f)
Cable *(2 required)*	HP 8120-4921 91 cm (35.8 in) 50Ω APC-3.5 mm(m) to APC-3.5 mm(m)
Cable	HP 8120-1840 122 cm (48 in) 50Ω coaxial BNC(m) to BNC(m)

Test 23. 300 MHz Reference 40 kHz Sidebands

This test measures sidebands on the rear panel 300 MHz 1 and 2 jacks. These sidebands are the result of emissions radiated from the HP 70004A color display or HP 70001A mainframe 40 kHz switching power supply.

1. Connect the HP 8566B spectrum analyzer's RF INPUT to the DUT's 300 MHz OUT #1 using the adapters and the APC 3.5 cables, as shown in Figure 7-24.
2. Connect the sniffer loop to the spectrum analyzer's RF INPUT using the adapter, as shown in Figure 7-24
3. Place the sniffer loop near the rear of the mainframe. The sniffer loop receives the emissions, which are then measured by the spectrum analyzer. To be measured, the emissions must be greater than –90 dBm. The 300 MHz up-converter multiplies the 300 MHz signal and sidebands together 20 times. This multiplication increases the sideband power level to within the measurement range of the spectrum analyzer. Refer to the following formula:

$$\text{Sideband increase (dB)} = 10 \times \log (6\ \text{GHz}/300\ \text{MHz})$$
$$= 26\ \text{dB}$$

   The spectrum analyzer measures the power of the first three upper and lower 40 kHz sidebands. Each measurement is made relative to the 6 GHz signal. The program uses video averaging to remeasure sidebands that exceed test limits.

Test 24. Calibrator Harmonics

Note This test requires a calibrated HP 8566B spectrum analyzer. If the HP 8566B spectrum analyzer is not calibrated when the test is entered, the verification software will start a calibration procedure. Refer to "Spectrum Analyzer/RF Cable Calibration" in Chapter 8. After calibration is complete, the software will return to this test procedure.

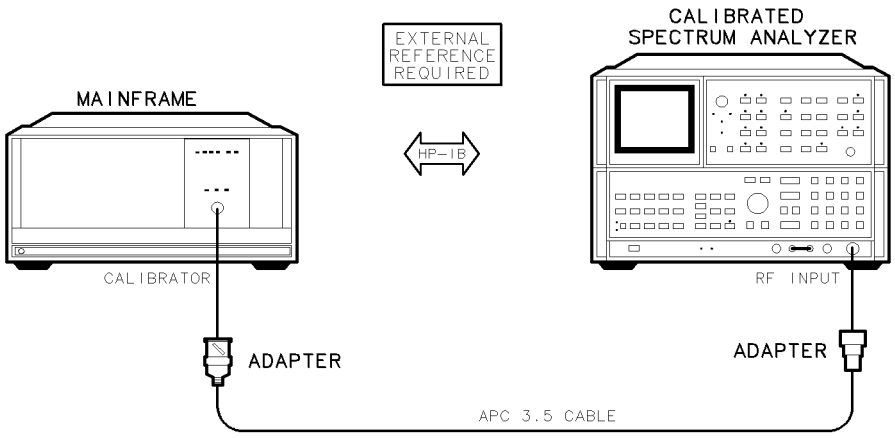

Figure 7-25. Calibrator Harmonics Test Setup

Test Equipment	**Preferred Model Numbers**
Calibrated spectrum analyzer	HP 8566B spectrum analyzer
External Reference	Refer to "External Frequency Reference" in Chapter 8.
Adapter	HP 1250-1744 50Ω APC-3.5(f) to N(m)
Adapter	HP 1250-2015 50Ω SMA(f) to BNC(m)
Cable	HP 8120-4921 91 cm (35.8 in) 50Ω APC-3.5 mm(m) to APC-3.5 mm(m)

This test measures the 300 MHz calibrator's harmonics.

1. Connect the HP 8566B spectrum analyzer's RF INPUT to the DUT's CALIBRATOR using the adapters, as shown in Figure 7-25.
2. The spectrum analyzer measures the power in dBc of the first 10 harmonics on the 300 MHz signal.

Test 25. Calibrator Output Impedance

Note This test requires a calibrated HP 8566B spectrum analyzer. If the HP 8566B spectrum analyzer is not calibrated when the test is entered, the verification software will start a calibration procedure. Refer to "Spectrum Analyzer/RF Cable Calibration" in Chapter 8. After calibration is complete, the software will return to this test procedure.

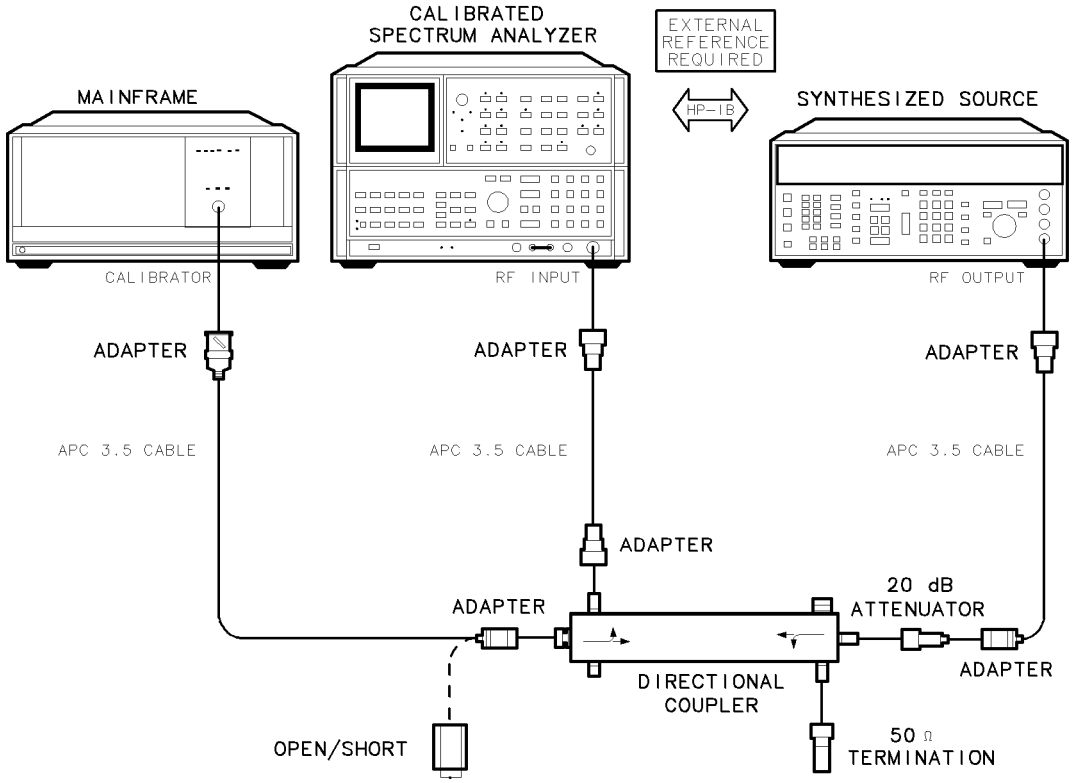

Figure 7-26. Calibrator Output Impedance Test Setup

Test Equipment	**Preferred Model Numbers**
Calibrated spectrum analyzer	HP 8566B spectrum analyzer
External reference	Refer to "External Frequency Reference" in Chapter 8.
Synthesized source	HP 8663A synthesized signal generator
Directional coupler	HP 778D
Adapter *(3 required)*	HP 1250-1744 50Ω APC-3.5(f) to N(m)
Adapter *(2 required)*	HP 1250-1745 50Ω APC-3.5(f) to N(f)
Adapter	HP 1250-2015 50Ω SMA(f) to BNC(m)
Attenuator	HP 8491A Option 020 coaxial fixed attenuator
Open/short	85037-60001
Termination	HP 908A 50Ω N(m) termination
Cable *(3 required)*	HP 8120-4921 91 cm (35.8 in) 50Ω APC-3.5 mm(m) to APC-3.5 mm(m)

This test measures the output return loss of the module's front panel calibrator jack. From the return loss measured, the calibrator source impedance can be determined.

1. Connect the HP 8566B spectrum analyzer's RF INPUT to the directional coupler using the adapters, as shown in Figure 7-26.
2. Connect the HP 8663A synthesized signal generator's RF OUTPUT to the directional coupler using the adapters, as shown in Figure 7-26.
3. Connect the DUT's CALIBRATOR to the directional coupler using the adapters, as shown in Figure 7-26.
4. Connect the 50 Ω termination to the directional coupler as shown in Figure 7-26.
5. Connect the open/short termination when requested by the test program.
6. The calibrator output impedance measurement is made with the module powered up. To eliminate interference with the calibrator signal, the return measurement is made 50 kHz offset from 300 MHz.

Test 26. 300 MHz Reference Isolation

Note This test requires a calibrated HP 8566B spectrum analyzer. If the HP 8566B spectrum analyzer is not calibrated when the test is entered, the verification software will start a calibration procedure. Refer to "Spectrum Analyzer/RF Cable Calibration" in Chapter 8. After calibration is complete, the software will return to this test procedure.

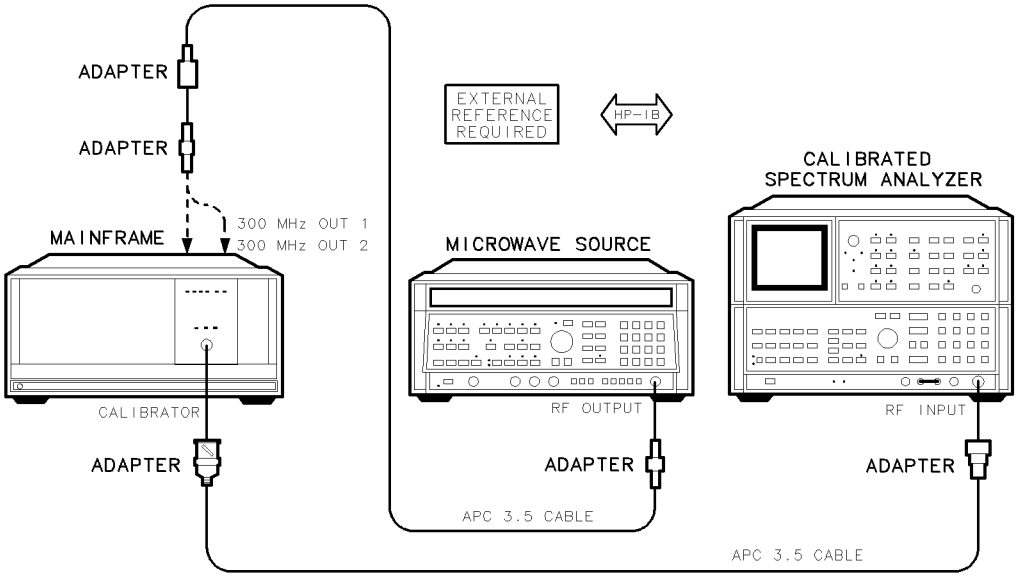

Figure 7-27. 300 MHz Reference Isolation Test Setup

Test Equipment	**Preferred Model Numbers**
Calibrated spectrum analyzer	HP 8566B spectrum analyzer
External reference	Refer to "External Frequency Reference" in Chapter 8.
Microwave source	HP 8340A/B synthesized sweeper
Adapter	HP 1250-1744 50Ω APC-3.5(f) to N(m)
Adapter	HP 1250-2015 50Ω SMA(f) to BNC(m)
Adapter *(2 required)*	HP 1250-0674 50Ω SMB(m) to SMA(f)
Adapter *(2 required)*	HP 1250-0672 50Ω SMB(f) to SMB(f)
Adapter	HP 5061-5311 50Ω APC-3.5(f) to APC-3.5(f)
Cable *(2 required)*	HP 8120-4921 91 cm (35.8 in) 50Ω APC-3.5 mm(m) to APC-3.5 mm(m)

This test measures the isolation between the module's three 300 MHz output ports. These ports include the front panel CALIBRATOR jack, the rear panel 300 MHz 1 jack, and the rear panel 300 MHz 2 jack. Isolation is checked at frequencies that simulate coupling from the RF module's second IF.

The program prompts you to connect six variations of the test setup shown in Figure 7-27. In each test, the microwave source simulates coupling from the RF module's low- and high-band IFs. by tuning from 278.6 to 321.4 MHz in 1 MHz steps for low-band coupling, and by tuning from 3 GHz to 6.6 GHz in 100 MHz steps for high-band coupling. The spectrum analyzer measures the amount of coupling. The program will prompt the user to make the proper connections. The six test variations are:

Setup 1
Microwave source to rear panel 300 MHz 1
Calibrated spectrum analyzer to rear panel 300 MHz 2
Setup 2
Microwave source to rear panel 300 MHz 1
Calibrated spectrum analyzer to front panel CALIBRATOR
Setup 3
Microwave source to rear panel 300 MHz 2
Calibrated spectrum analyzer to rear panel 300 MHz 1
Setup 4
Microwave source to rear panel 300 MHz 2
Calibrated spectrum analyzer to front panel CALIBRATOR
Setup 5
Microwave source to front panel CALIBRATOR
Calibrated spectrum analyzer to rear panel 300 MHz 1
Setup 6
Microwave source to front panel CALIBRATOR
Calibrated spectrum analyzer to rear panel 300 MHz 2

Test 27. External Reference

Note

- This test requires a calibrated HP 8566B spectrum analyzer. If the HP 8566B spectrum analyzer is not calibrated when the test is entered, the verification software will start a calibration procedure. Refer to "Spectrum Analyzer/RF Cable Calibration" in Chapter 8. After calibration is complete, the software will return to this test procedure.
- Disconnect the 100 MHz reference from the HP 70900B local oscillator source.

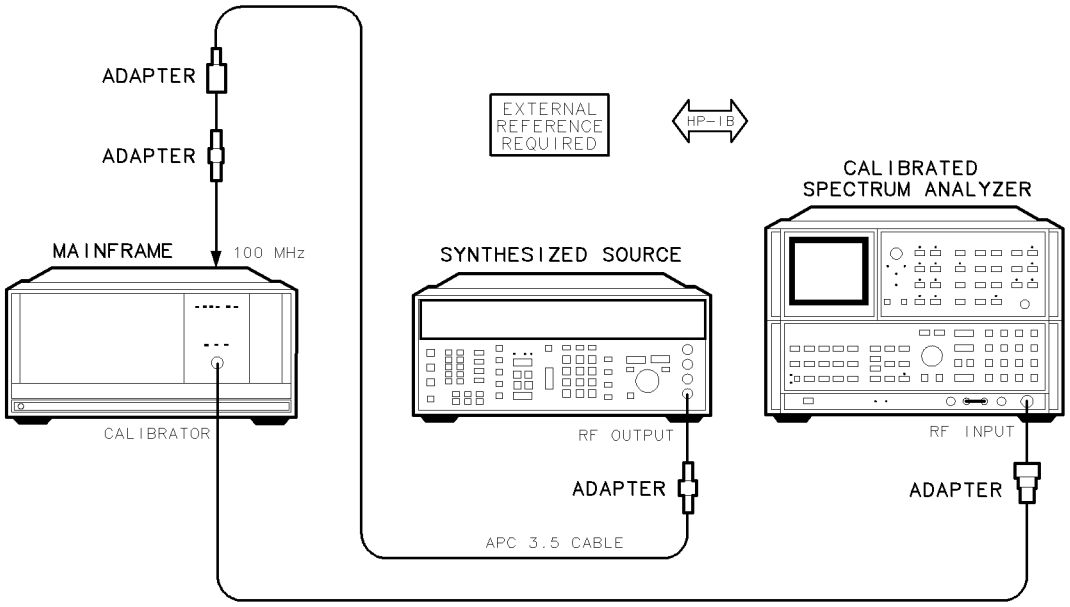

Figure 7-28. External Reference Test Setup

Test Equipment	**Preferred Model Numbers**
Calibrated spectrum analyzer	HP 8566B spectrum analyzer
External reference	Refer to "External Frequency Reference" in Chapter 8.
Synthesized source	HP 8663A synthesized signal generator
Adapter	HP 1250-1744 50Ω APC-3.5(f) to N(m)
Adapter	HP 1250-0674 50Ω SMB(m) to SMA(f)
Adapter	HP 1250-0672 50Ω SMB(f) to SMB(f)
Adapter	HP 5061-5311 50Ω APC-3.5(f) to APC-3.5(f)
Cable *(2 required)*	HP 8120-4921 91 cm (35.8 in) 50Ω APC-3.5 mm(m) to APC-3.5 mm(m)
Cable	HP 8120-1840 122 cm (48 in) 50Ω coaxial BNC(m) to BNC(m)

This test verifies that the DUT can lock onto an external-frequency reference when reference power and frequency vary.

1. Connect the HP 8566B spectrum analyzer's RF INPUT to the DUT's CALIBRATOR using the adapter as shown in Figure 7-28.

2. Connect the HP 8663A synthesized signal generator's RF OUTPUT to the DUT's 100 MHz rear-panel input using the adapters and the APC 3.5 cable, as shown in Figure 7-28.
3. The synthesized source provides the 100 MHz external reference signal to the DUT. The calibrated spectrum analyzer monitors the calibrator signal to detect problems in the 100 MHz and the 300 MHz assemblies.

   Test 1 verifies that the DUT can lock onto an external reference. The controller checks for any unlock status errors using a 100 MHz, 4 dBm reference.

   Test 2 verifies that the DUT remains locked when the external reference's frequency is varied.

   Test 3 verifies that the 300 MHz CALIBRATOR remains level when external reference power is varied.

   Test 4 verifies the operation of the DUT internal/external reference switch. The DUT typically uses its internal 100 MHz oscillator as a reference. When the DUT senses an external reference signal, the internal/external switch is automatically set to external. In this portion of the test, the synthesized source power is decreased until the switch changes from external to internal.

Test 28. Reference Oscillator Noise and Stability

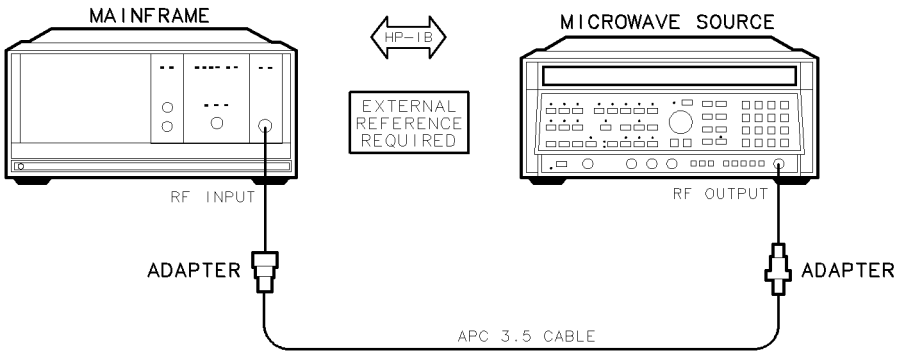

Figure 7-29. Reference Oscillator Noise and Stability Test Setup

Test Equipment	**Preferred Model Numbers**
RF section	HP 70905A RF section, HP 70906A RF section, or HP 70908A RF section
IF section	HP 70902A IF section
External reference	Refer to "External Frequency Reference" in Chapter 8.
Microwave source	HP 8340A/B synthesized sweeper
Adapter	HP 1250-1744 50Ω APC-3.5(f) to N(m)
Adapter	HP 5061-5311 50Ω APC-3.5(f) to APC-3.5(f)
Cable	HP 8120-4921 91 cm (35.8 in) 50Ω APC-3.5 mm(m) to APC-3.5 mm(m)

This test measures the shot noise generated by, and the short-term stability of, the 100 MHz reference oscillator.

1. Disconnect the 100 MHz reference from the HP 70900B local oscillator source. If an external 100 MHz reference was connected, allow 30 minutes for the internal reference to stabilize.
2. Connect the HP 8340A/B synthesized sweeper's RF OUTPUT to the DUT's RF INPUT using the adapters and the APC 3.5 cable, as shown in Figure 7-29.
3. To measure the shot noise, the program performs a residual FM test. The slope of the IF module's 30 Hz resolution bandwidth filter is measured using the LO feedthrough signal. After calculating the filter's slope, the test places the microwave source's 5 GHz signal in the middle of the filter's slope and measures the residual FM. (The residual FM equals the signal's amplitude variation times the slope of the filter.) Since the residual FM generated by the DUT's 100 MHz oscillator is typically greater than the FM generated by the microwave source, any residual FM measured is due to the DUT 100 MHz oscillator. To check oscillator stability, the test programs the DUT to make frequency measurements on a stable signal over a 20-second period. These measurements are integrated to derive the oscillator drift rate.

Test 29. YTO Linearity

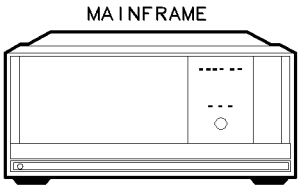

Figure 7-30. Test Setup for Test 29. YTO Linearity

This test measures the YIG-tuned oscillator (YTO) frequency linearity over the frequency range of 3 GHz to 6.6 GHz.

The test determines the YTO linearity by reading the module's tune correction DAC. The YTO is tuned in 100 MHz steps from 3 GHz to 6.6 GHz. At each frequency, the tune correction DAC value is measured, converted to a frequency value, and plotted graphically. Before performing this test, install the DUT into an HP 70004A color display or HP 70001A mainframe.

8

System Calibration

This chapter contains the setups for all system calibration procedures that must be performed in order to optimize module performance when assemblies are changed, repaired, or adjusted. All of the setups described in this chapter are automated. These automated setups require a controller and are run with software that is described in Chapter 2.

External Frequency Reference

Certain verification tests (listed below) require an external frequency reference. When running these tests, equipment such as sources, analyzers, counters, and the DUT must be connected to the same frequency standard. Figure 8-1 illustrates the preferred order of connecting test equipment to a 10 MHz standard. The HP 70900B local oscillator source requires a 100 MHz standard. To generate the standard, refer to "100 MHz Reference Generation," below.

The standard's specified aging rate requirement is less than 10^{-9}/day. The recommended microwave source, synthesized source, and calibrated spectrum analyzer's internal time bases meet the aging rate requirement. It is important that all test equipment be connected to the same frequency standard.

Tests Requiring an External Frequency Reference

"Test 03. Residual FM (Span >10 MHz)" in Chapter 7
"Test 04. LO Output Spurious Response" in Chapter 7
"Test 05. LO Display Sidebands" in Chapter 7
"Test 06. LO 40 kHz Sidebands" in Chapter 7
"Test 07. Reference Oscillator Accuracy" in Chapter 7
"Test 13. LO Frequency and Span Accuracy (Span >10 MHz)" in Chapter 7
"Test 14. LO Span Accuracy (Phase-Locked Spans)" in Chapter 7
"Test 15. LO Frequency Accuracy (Span ≤10 MHz)" in Chapter 7
"Test 16. LO Frequency Error versus Sweep Time" in Chapter 7
"Test 23. 300 MHz Reference 40 kHz Sidebands" in Chapter 7
"Test 24. Calibrator Harmonics" in Chapter 7
"Test 25. Calibrator Output Impedance" in Chapter 7
"Test 26. 300 MHz Reference Isolation" in Chapter 7
"Test 27. External Reference" in Chapter 7
"Test 28. Reference Oscillator Noise and Stability" in Chapter 7

100 MHz Reference Generation

Most of the test equipment requires a 10 MHz external reference. However, the DUT requires a 100 MHz reference. There are three equipment configurations used to generate the 100 MHz signal for the DUT:

HP 70310A precision frequency reference: The HP 70310A precision frequency reference has a 100 MHz output for the HP 70900B local oscillator source and a 10 MHz reference for most other test equipment. Connect the equipment as shown in Figure 8-2.

HP 70310A precision frequency reference and 10 MHz House Standard: The HP 70310A precision frequency reference's 100 MHz reference can be derived from the house standard (for example, the HP 5061B cesium beam standard). See Figure 8-3 for the equipment connections.

HP 8566B spectrum analyzer and 10 MHz House Standard: The HP 8566B spectrum analyzer's 100 MHz calibrator output can be used for the reference. See Figure 8-4 for the equipment connections.

A 10 dB pad is required to prevent driving the RF amplifier into saturation. The RF amplifier must have a gain of at least 20 dB at 100 MHz.

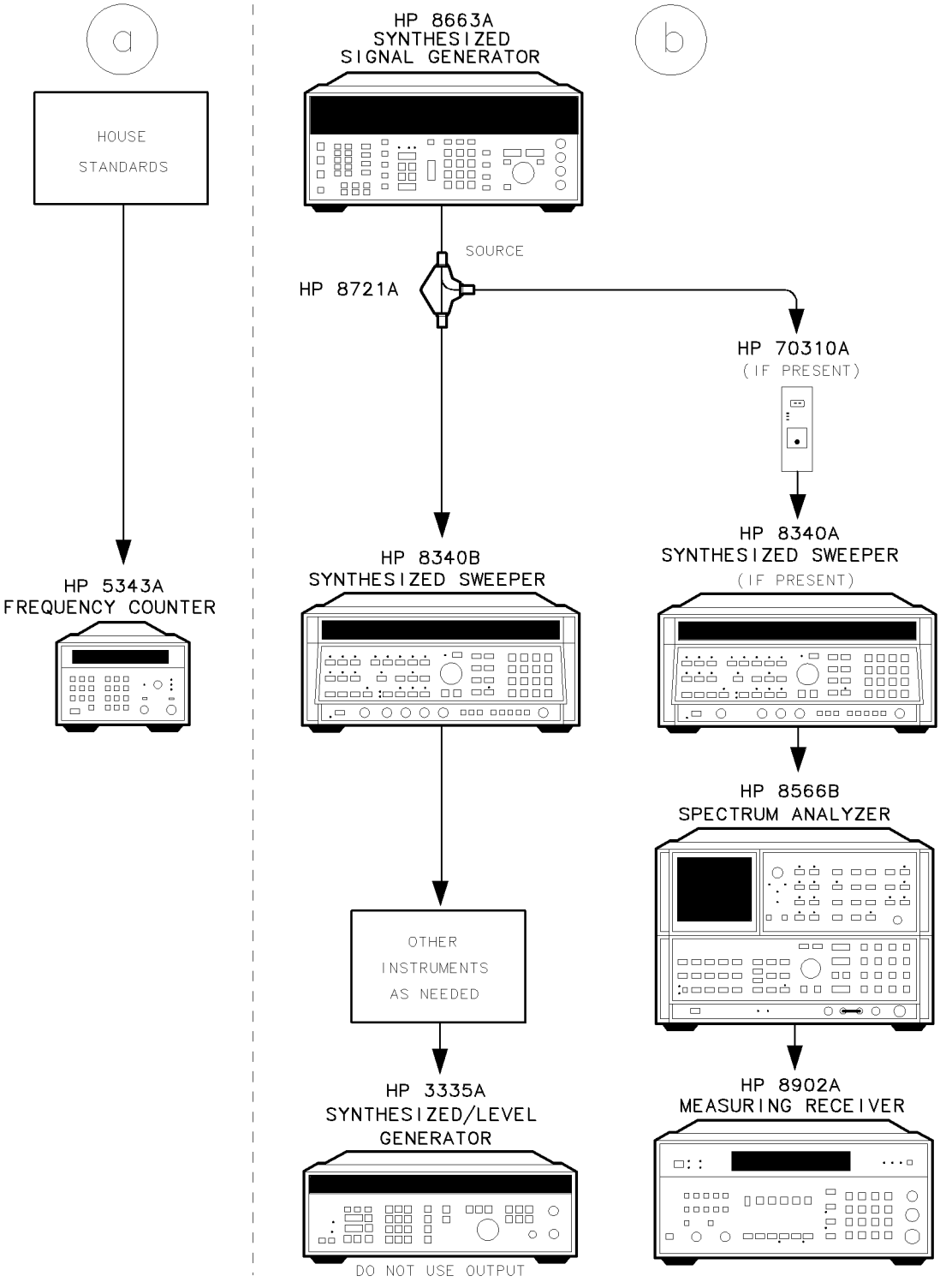

Figure 8-1. Preferred Frequency Reference Connections

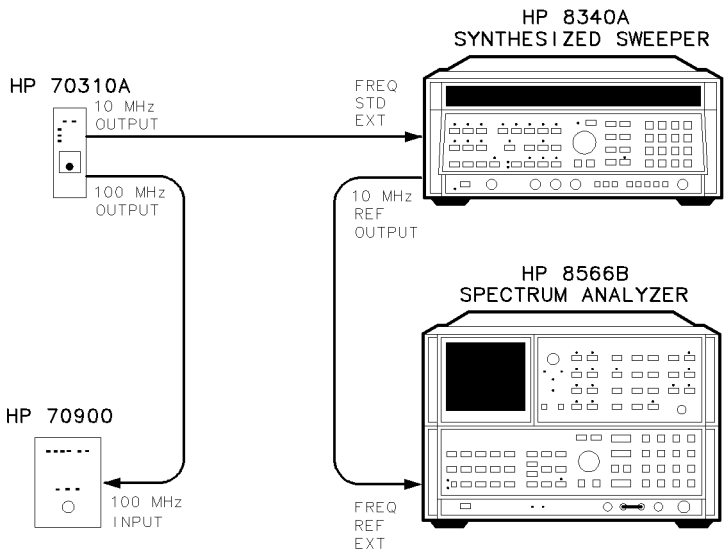

Figure 8-2. Using an HP 70310A Precision Frequency Reference

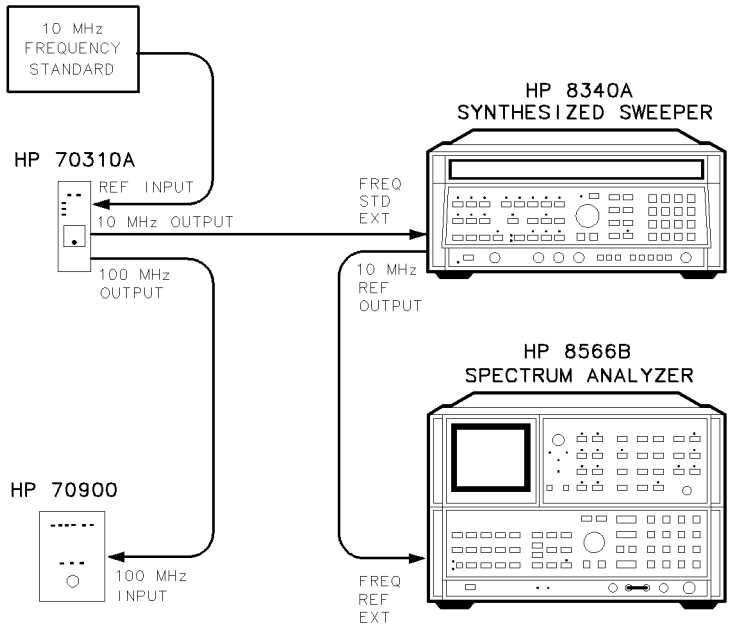

Figure 8-3. Using an HP 70310A Precision Frequency Reference and a House Standard

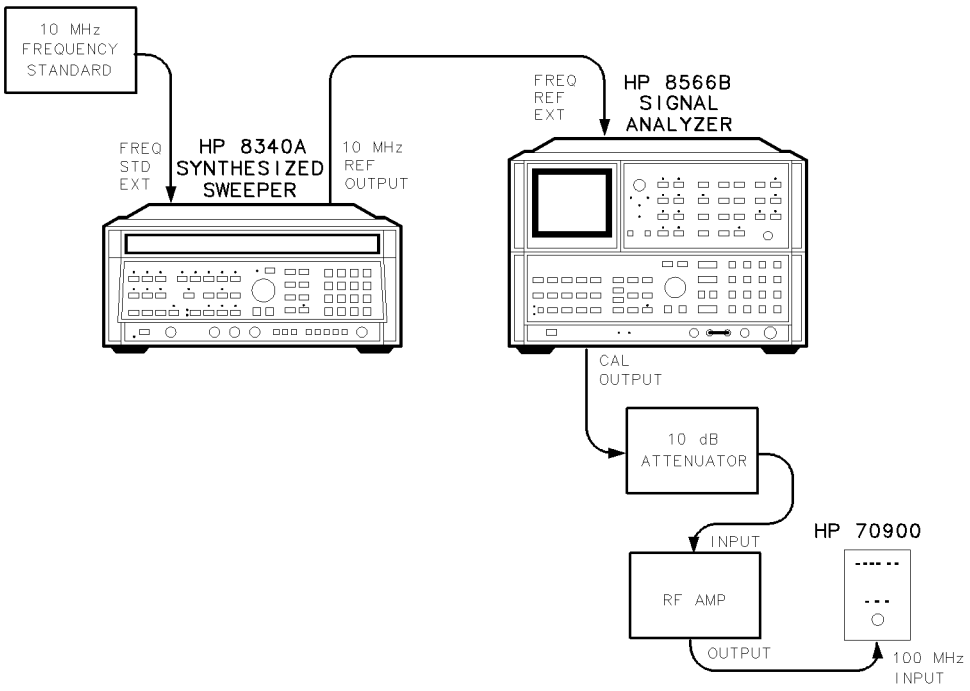

Figure 8-4. Using an HP 8566B Spectrum Analyzer and a House Standard

Spectrum Analyzer/RF Cable Calibration

Note Because the HP 8566B spectrum analyzer and RF cable are calibrated at the same time, use both throughout the following tests.

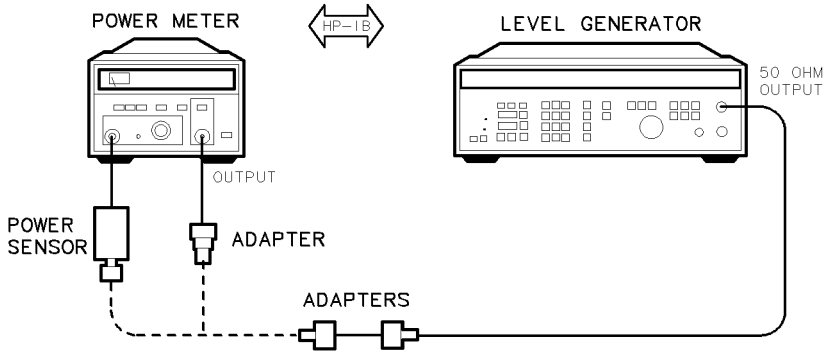

Figure 8-5. Reference Calibration Test Setup

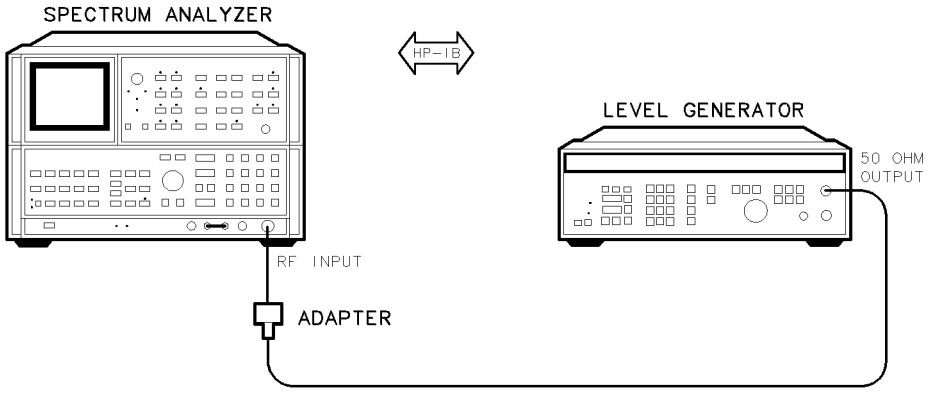

Figure 8-6. IF Calibration Test Setup

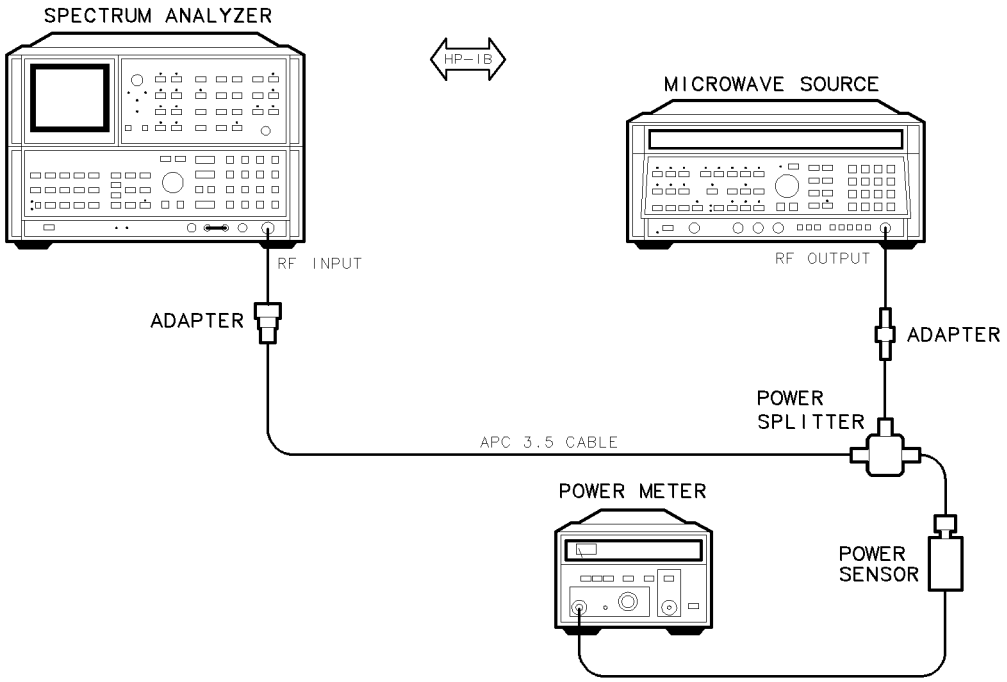

Figure 8-7. RF Calibration Test Setup

Test Equipment	Preferred Model Numbers
Spectrum analyzer	HP 8566B spectrum analyzer
Level generator	HP 3335A synthesizer/level generator
Microwave source	HP 8340A synthesized sweeper
Power meter	HP 437B power meter
Power sensor	HP 8485A APC-3.5 mm(m) power sensor
Power splitter	HP 11667B power splitter
Adapter	HP 1250-1744 50Ω APC-3.5(f) to N(m)
Adapter	HP 1250-1750 50Ω APC-3.5(m) to N(f)
Adapter	HP 1250-1476 precision 50Ω N(m) to BNC(f)
Adapter	HP 5061-5311 50Ω APC-3.5(f) to APC-3.5(f)
Cable	HP 8120-4921 91 cm (35.8 in) 50Ω APC-3.5 mm(m) to APC-3.5 mm(m)
Cable	HP 8120-1840 122 cm (48 in) 50Ω coaxial BNC(m) to BNC(m)

Many of the verification tests require accurate amplitude measurements. This procedure ensures accurate measurements by calibrating an HP 8566B spectrum analyzer/RF cable combination. Refer to Table 6-2 for tests requiring spectrum analyzer calibration.

This procedure is activated when a test requiring spectrum analyzer calibration is chosen or when more than eight days have elapsed since the last calibration. Although this procedure may begin after a test is selected, the software will return to the selected test after the procedure is completed.

Calibration consists of the following three procedures:

Spectrum Analyzer/RF Cable Calibration

1. **Reference Calibration** measures a reference signal and uses this signal to characterize the spectrum analyzer's 10 kHz bandwidth and log fidelity. Figure 8-5 shows the required calibration setup.
2. **IF Calibration** characterizes spectrum analyzer error in step gain, log fidelity, frequency, and resolution bandwidth-filter-switching amplitude. All measurements are normalized to a 10 kHz resolution bandwidth setting. Figure 8-6 shows the required calibration setup.
3. **RF Calibration** measures the frequency response of the spectrum analyzer. Figure 8-7 shows the required calibration setup.

9

Replacing Major Assemblies

This chapter contains procedures for removal and replacement of major assemblies in your local oscillator source. Instructions are given for the following assemblies:

- A1A1 host/processor
- A1A2 1/4 MB RAM/ROM
- A2 video processor
- A3 power supply
- A4A1 300 MHz amplifier
- A4A2 idler lock
- A4A3 idler VCO microcircuit
- A6A1 100 MHz reference
- A6A2 YTO lock
- A6A3 idler buffer
- A6A4 YTO lock microcircuit
- A6A5 YTO
- A7 FRAC'N synthesizer for Serial #3219A01388 and Above
- A7 FRAC'N synthesizer for Serial #3144A01387 and Below
- A8 frequency control
- A9 front panel
- A10 motherboard
- A11 wiring harness

This service guide is part of an Option OB3 package which consists of two manuals. To obtain a list of all versions of all assemblies available for your local oscillator source, refer to Manual 2.

CAUTION

- Many gaskets used in the module conduct electrical current. These gaskets are located under assembly covers and around assembly connectors and feedthroughs. Do not misplace these gaskets in an assembly. When removing assembly covers, avoid losing gaskets by orienting the assembly with the cover down and then lifting the assembly off the cover.
- When replacing screws in an assembly or part, first start all screws, then tighten them evenly.
- All SMA rigid-cable connections should be torqued to 10 inch-pounds.

Table 9-1. Required Tools

Description	HP Part Number
5/16 inch open-end wrench	8720-0015
3 mm hex (Allen) wrench	8710-1366
1/4 inch nut driver	8720-0002
9/16 inch nut driver (drilled out, end covered with heat-shrink tubing)	8720-0008
Small #1 Pozi-driv screwdriver	8710-0899
Large #2 Pozi-driv screwdriver	8710-0900
#0 Phillips screwdriver	8710-0978
Long-nose pliers	8710-0030
Wire cutters	8710-0012

A1A1 Host/Processor

CAUTION

- Use electrostatic discharge (ESD) precautions when working on this assembly. Refer to "Preparing a Static-Safe Work Station" in Chapter 4.
- Removing the A1A2 1/4 MB RAM/ROM from the A1A1 host/processor results in the loss of data stored in RAM. A battery on the A1A1 host/processor powers the RAM.

To Remove the A1A1 Host/Processor:

1. Remove the module's cover by removing the eight screws ① (four on top, two on each side) illustrated in Figure 9-1.
2. Remove three screws ②, ③, and ④ and their spacers from the A1A1 host/processor.
3. Disconnect wire W11 from the A1A1 host/processor's connector ⑤.
4. Carefully work the controller assembly out of its two motherboard connectors. When it is just out of the connectors, but still within the frame, disconnect W14 ⑥.

CAUTION The controller assembly can be damaged if it contacts a conductive surface. This possibility exists because of the board-mounted battery.

5. Carefully move the controller assembly away from the frame, taking care not to damage the W20 HP-MSIB flex-print cable ⑦. Disconnect the flex-print cable and put the assembly on a nonconductive, static-protected surface.

To Replace the A1A1 Host/Processor:

1. Reconnect the W20 HP-MSIB flex cable to the controller assembly.
2. Insert the assembly into its motherboard connectors, taking care that pins and connectors line up properly before seating the assembly into the connectors.
3. Reconnect W11 cable harness ⑤.
4. Secure the assembly using the red ②, green ③, and yellow ④ spacers and their screws. Place a flat washer on the screw that secures the green center spacer. Torque screws to 6 inch-pounds.
5. Reconnect the W14 cable harness ⑥.
6. Replace the module's cover. Replace eight screws ①. Torque screws to 6 inch-pounds.

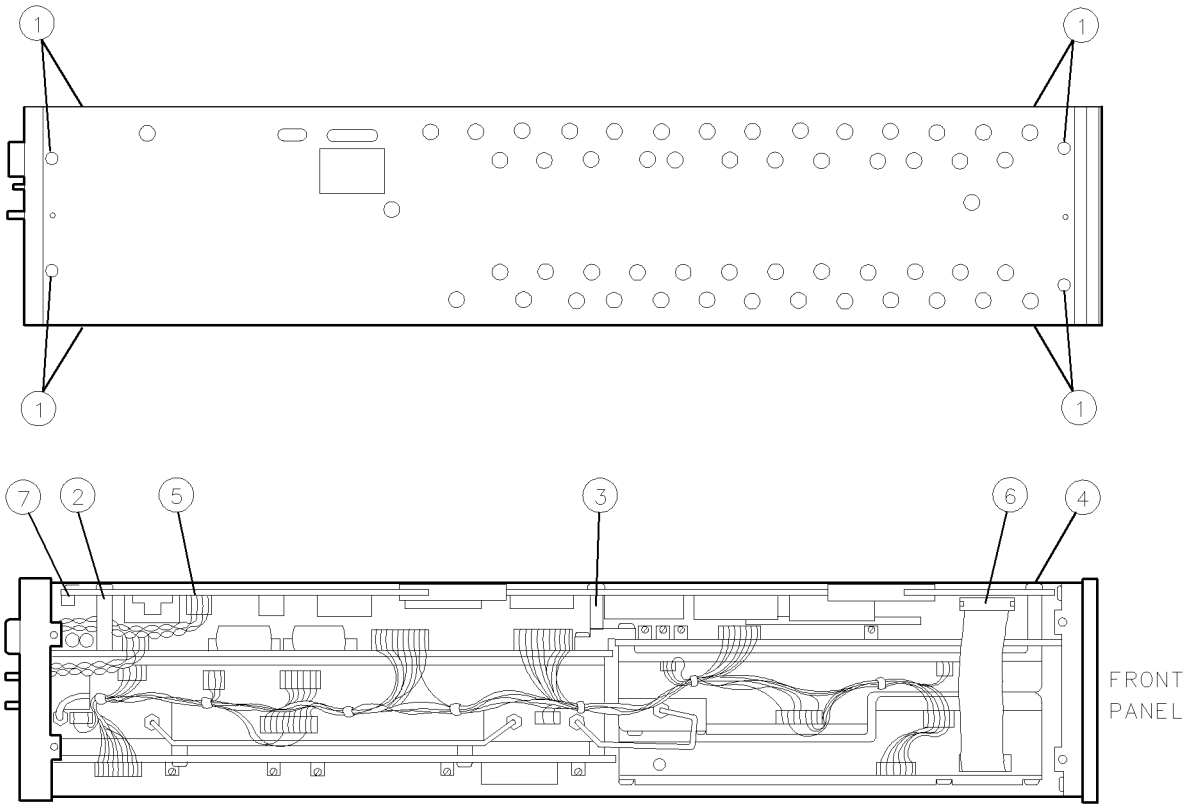

Figure 9-1. A1A1 Host/Processor Removal/Replacement

A1A2 1/4 MB RAM/ROM

CAUTION

- Use electrostatic discharge (ESD) precautions when working on this assembly. Refer to "Preparing a Static-Safe Work Station" in Chapter 4.
- Removing the A1A2 1/4 MB RAM/ROM from the A1A1 host/processor results in the loss of data stored in RAM. A battery on the A1A1 host/processor powers the RAM.

To Remove the A1A2 1/4 MB RAM/ROM:

1. Remove the module's cover by removing eight screws ① (four on top, two on each side) illustrated in Figure 9-1.
2. Remove one screw ③ with a star washer, and remove the flat washer and green spacer from the center top of the A1A2 1/4 MB RAM/ROM.
3. Raise the extractors on either end of the A1A2 1/4 MB RAM/ROM. This will withdraw the A1A2 1/4 MB RAM/ROM from the connectors on the A1A1 host/processor.
4. Remove the A1A2 1/4 MB RAM/ROM, and place it on a non-conductive, static-protected surface.

To Replace the A1A2 1/4 MB RAM/ROM:

1. Carefully slide the A1A2 1/4 MB RAM/ROM into the guides on the A1A1 host/processor, seating the connectors firmly until the extractors can be depressed to allow the cover to fit.
2. Replace the green spacer, flat washer, and screw with a star washer ③. Torque screw to 6 inch-pounds.

A2 Video Processor

CAUTION Use electrostatic discharge (ESD) precautions when working on this assembly. Refer to "Preparing a Static-Safe Work Station" in Chapter 4.

To Remove the A2 Video Processor:

1. Refer to the A1A1 host/processor replacement procedure to remove the A1A1 host/processor.
2. Disconnect the A11 wiring harness ① from the A2 video processor. See Figure 9-2.
3. Remove the bracket and screws ② from the assembly. Carefully work the assembly out of its motherboard connector. When it is just out of the connector, carefully disconnect W6 ③.
4. Remove the video processor assembly.

To Replace the A2 Video Processor:

1. Insert the video processor assembly into its motherboard connector.
2. Replace the bracket and screws ② in the assembly. Torque screws to 6 inch-pounds.
3. Reconnect A11 wiring harness ① and W6 ③.
4. Refer to the A1A1 host/processor replacement procedure to replace the A1A1 host/processor.

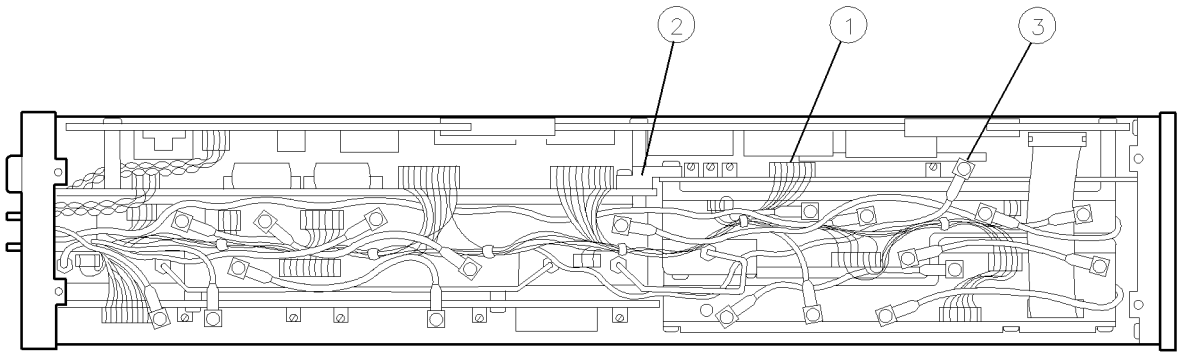

Figure 9-2. A2 Video Processor Removal/Replacement

A3 Power Supply

CAUTION Use electrostatic discharge (ESD) precautions when working on this assembly. Refer to "Preparing a Static-Safe Work Station" in Chapter 4.

To Remove the A3 Power Supply:

1. Refer to the A1A1 host/processor replacement procedure to remove the A1A1 host/processor.
2. Disconnect the A11 wiring harness from the two connectors ① on the A3 power supply. See Figure 9-3.
3. Remove the screws ② from the assembly.
4. Carefully work the assembly out of its motherboard connector. When it is just out of the connector, disconnect W20 ③.
5. Remove the A3 power supply.

To Replace the A3 Power Supply:

1. Insert the power supply assembly into its motherboard connector, taking care not to bend any pins.
2. Replace the screws ② in the assembly. Torque screws to 6 inch-pounds.
3. Reconnect the two A11 wiring harness connectors ① and W20 ③. W20 is a brown/orange/red/yellow twisted-wire pair. W20 has a 5-pin connector that plugs into a 4-pin jack. W20 should be offset one pin to the left, as shown in Figure 9-3. W20's clear wire should not be connected to a pin. (The clear wire is an unused ground; if W20 is plugged in incorrectly, overcurrent conditions will be indicated on the mainframe.)
4. Refer to A1A1 host/processor replacement to replace the A1A1 host/processor.

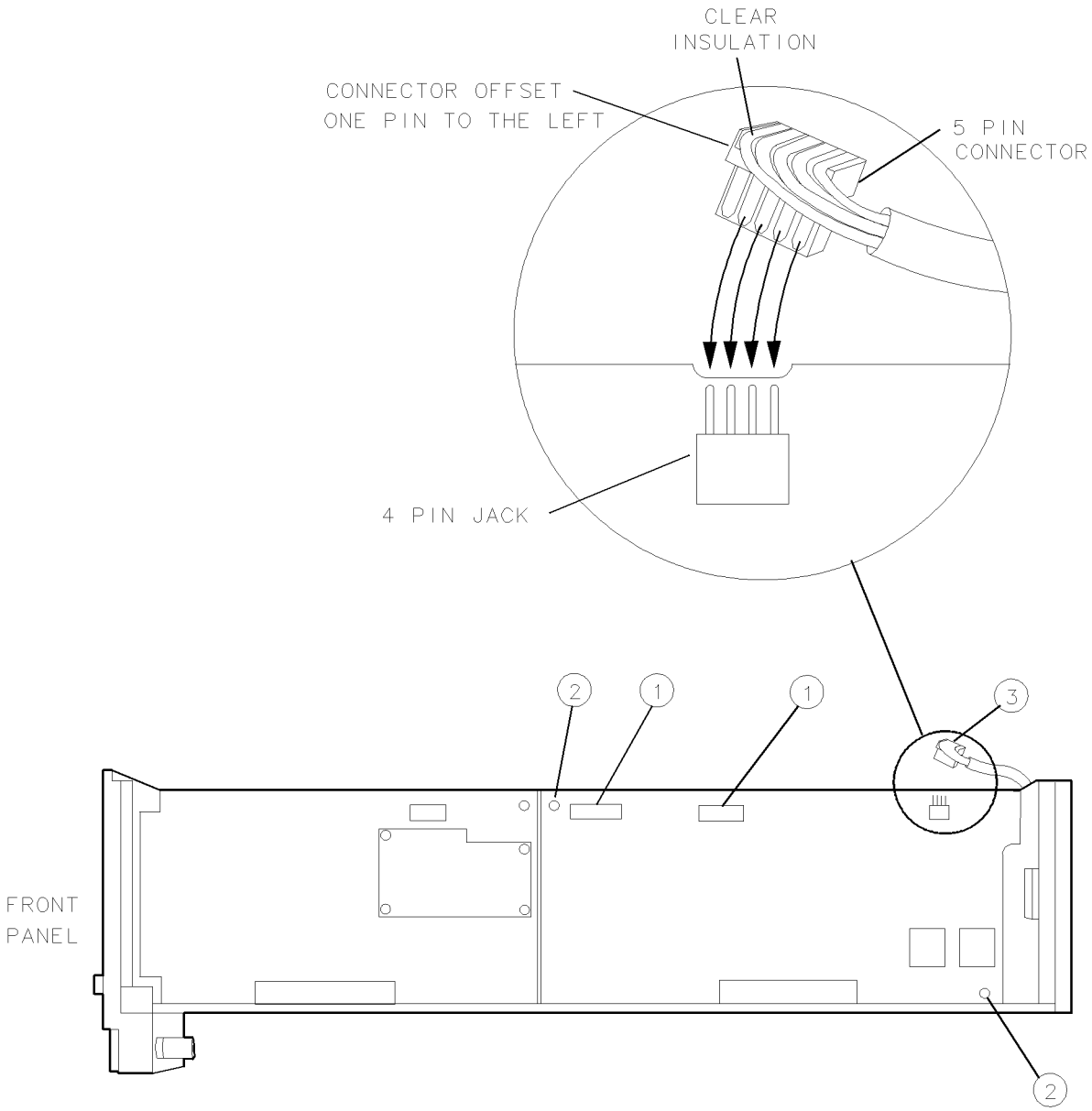

Figure 9-3. A3 Power Supply Removal/Replacement

A4 Idler Phase-Lock Loop

CAUTION Use electrostatic discharge (ESD) precautions when working on this assembly. Refer to "Preparing a Static-Safe Work Station" in Chapter 4.

To Remove the A4 Idler Phase-Lock Loop:

1. Refer to the A1A1 host/processor replacement procedure to remove the A1A1 host/processor.
2. Remove three screws ① while the module rests on its left side. See Figure 9-4.
3. Disconnect W2 ②, W13 ③, W7 ④, W3 ⑤, W1 ⑥, and W8 ⑦ from the A4 idler phase-lock loop. Disconnect W6 ⑧ from the A2 video processor.
4. Disconnect the three A11 wiring harness wire harness connectors ⑨.
5. Remove semirigid cable W17 ①⓪.
6. Remove the front screw from A2 video processor/A3 power supply bracket ①①. Loosen the bracket's back screw.
7. Remove the A4 idler phase-lock loop.

To Replace the A4 Idler Phase-Lock Loop:

1. Place the A4 idler phase-lock loop into the module.
2. Replace semirigid cable W17 ①⓪. Torque connector to 10 inch-pounds.
3. Reconnect the four A11 wiring harness connectors ⑨.
4. Reconnect W1 ⑥, W3 ⑤, W8 ⑦, W13 ③, W2 ②, W7 ④, and W6 ⑧.
5. Reconnect the A11 wiring harness in four places ⑨.
6. Replace the three screws ① while the module rests on its left side. Torque screws to 20 inch-pounds.
7. Refer to A1A1 host/processor replacement to replace the A1A1 host/processor.

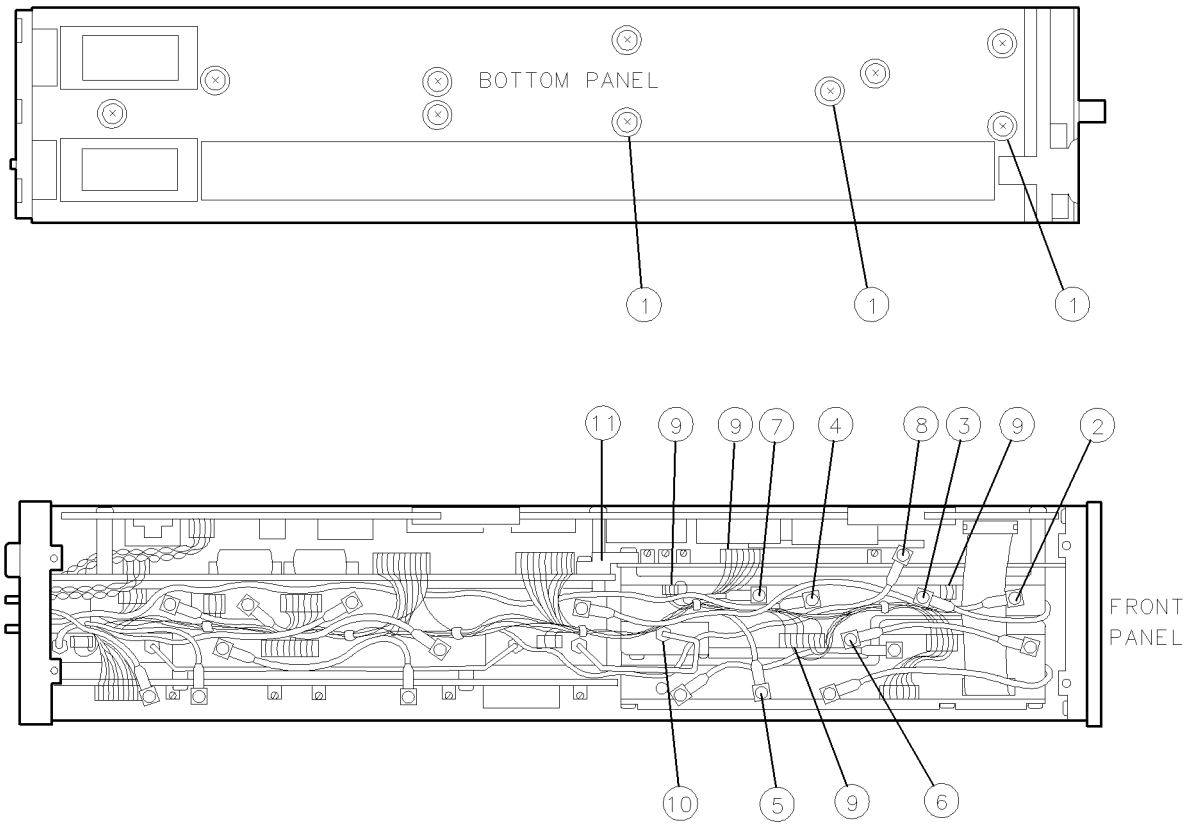

Figure 9-4. A4 Idler Phase-Lock Loop Removal/Replacement

A4A1 300 MHz Amplifier

CAUTION

- Use electrostatic discharge (ESD) precautions when working on this assembly. Refer to "Preparing a Static-Safe Work Station" in Chapter 4.
- Gaskets used in this assembly conduct electrical current. Misplaced gaskets may cause electrical shorts. The gaskets are located under the assembly covers and around connectors and feedthroughs. When removing assembly covers, avoid losing gaskets by orienting the assembly with the cover down and then lifting the assembly off the cover.

To Remove the A4A1 300 MHz Amplifier:

1. Refer to the A4 idler phase-lock loop replacement procedure to remove the A4 idler phase-lock loop.
2. Remove six screws ① from the A4A1 300 MHz amplifier. To remove the cover, hold the assembly top-side down, then lift the assembly off the cover. This allows the gaskets to remain in their associated channels. See Figure 9-5. Do not lose any RFI gasket material.
3. Remove the screw ② securing the assembly to the casting and lift the assembly straight up. Do not bend the feedthrough pin ③, which is inserted into a socket on the back of the board assembly.

To Replace the A4A1 300 MHz Amplifier:

1. If the feedthrough pin ③ has been bent, carefully straighten it.
2. Position the A4A1 300 MHz amplifier in the casting with the socket over the feedthrough pin. Press the assembly gently into place, and secure it with the screw removed in step 3. Torque the screw to 6 inch-pounds.
3. To install the cover, ensure all gaskets are in their respective cover channels, hold the cover gasket-side up, and lay the assembly onto the cover. This keeps the gaskets from falling out. Replace the six screws ①. Torque screws to 9 inch-pounds.
4. Refer to A4 idler phase-lock loop replacement to replace the A4 idler phase-lock loop.

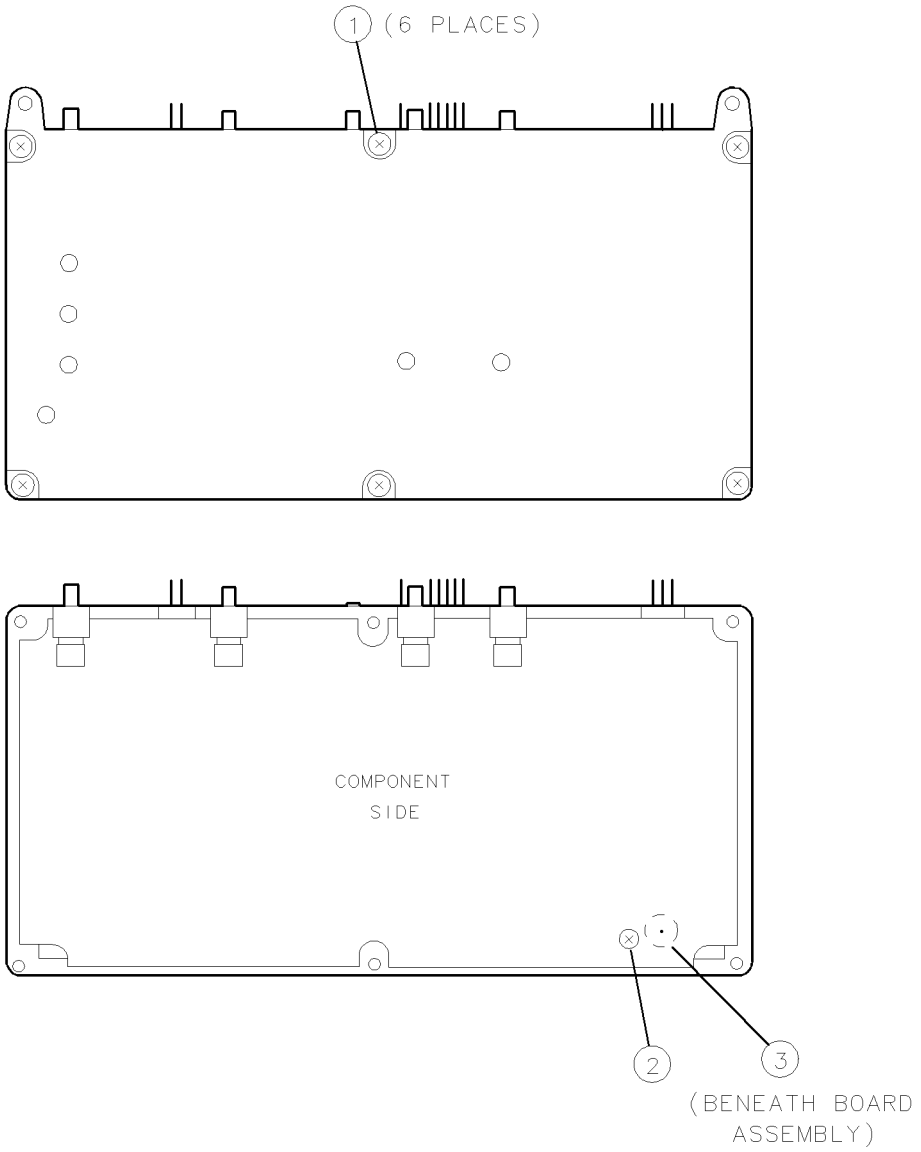

Figure 9-5. A4A1 300 MHz Amplifier Removal/Replacement

A4A2 Idler Lock

CAUTION

- Use electrostatic discharge (ESD) precautions when working on this assembly. Refer to "Preparing a Static-Safe Work Station" in Chapter 4.
- Gaskets used in this assembly conduct electrical current. Misplaced gaskets may cause electrical shorts. The gaskets are located under the assembly covers and around connectors and feedthroughs. When removing assembly covers, avoid losing gaskets by orienting the assembly with the cover down and then lifting the assembly off the cover.

To Remove the A4A2 Idler Lock:

1. Refer to the A4 idler phase-lock loop replacement procedure to remove the A4 idler phase-lock loop. The A4A2 idler lock and the A4A3 idler VCO microcircuit are removed as an assembly and then separated.
2. Remove four cover screws ①, then remove the cover. See Figure 9-6.
3. Remove the screw ② from the A4A2 idler lock and the two screws ③ from the A4A3 idler VCO microcircuit.
4. Carefully remove the A4A2 idler lock/A4A3 idler VCO microcircuit by lifting straight up. Do not bend the feedthrough pin ⑤ on the bottom of the A4A3 idler VCO microcircuit.
5. Carefully separate the A4A2 idler lock from the A4A3 idler VCO microcircuit.

To Replace the A4A2 Idler Lock:

1. Position the A4A2 idler lock in the casting, and replace the screw ②. Torque the screw to 6 inch-pounds.
2. If the feedthrough pin ⑤ on the A4A3 idler VCO microcircuit has been bent, straighten it.
3. Carefully position the A4A3 idler VCO microcircuit, noting the alignment of the pins ④; press the microcircuit into place, and replace the two screws ③. Torque screws to 6 inch-pounds.
4. To install the cover, ensure all gaskets are in their respective cover channels, hold the cover with the gaskets up and lay the assembly onto the cover. This keeps gaskets from falling out when the cover is turned over.
5. Replace the A4A3 idler VCO microcircuit cover and replace the four screws ①. Torque screws to 9 inch-pounds.
6. Refer to the A4 idler phase-lock loop replacement procedure to replace the A4 idler phase-lock loop.

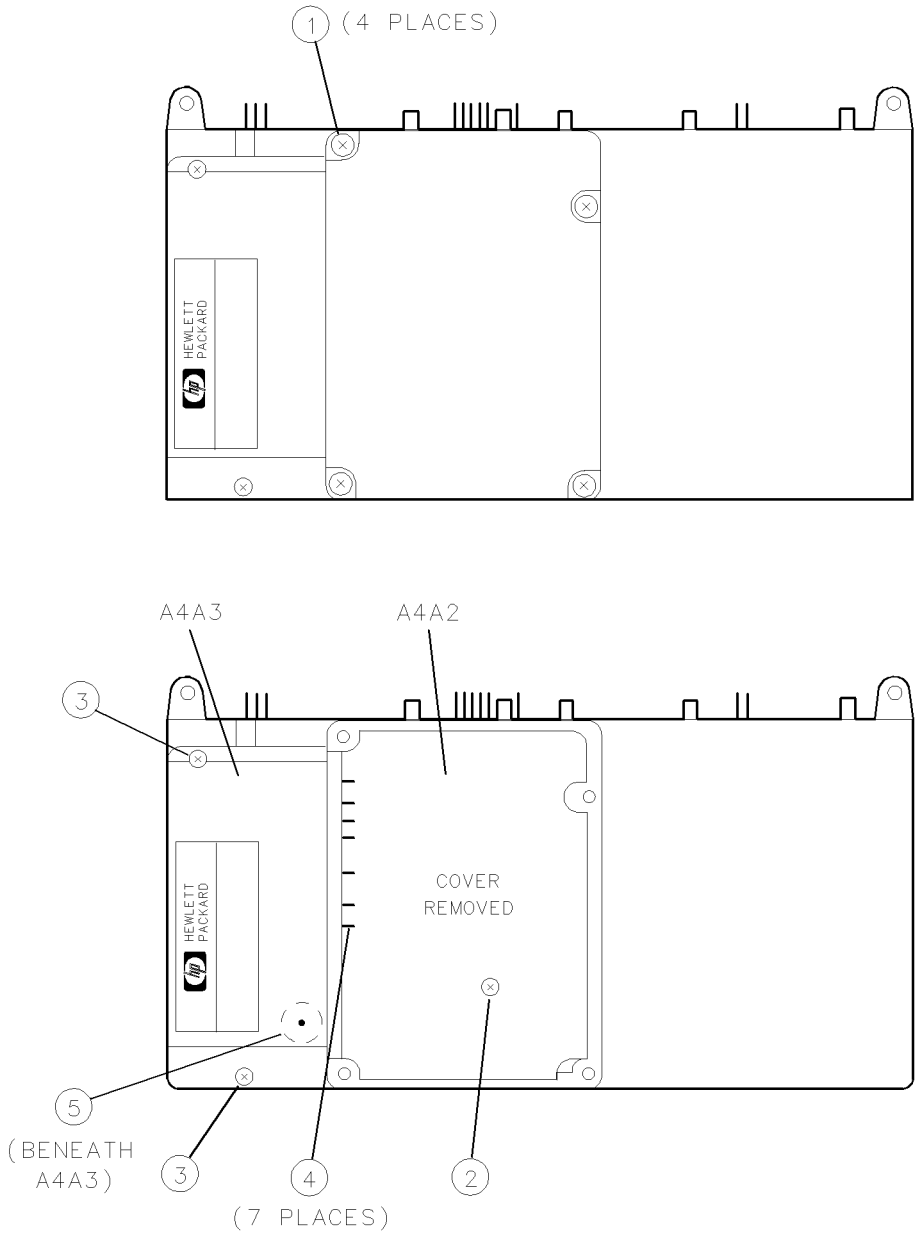

Figure 9-6. A4A2 Idler Lock and A4A3 Idler VCO Microcircuit Removal/Replacement

A6 YTO Phase-Lock Loop

CAUTION Use electrostatic discharge (ESD) precautions when working on this assembly. Refer to "Preparing a Static-Safe Work Station" in Chapter 4.

To Remove the A6 YTO Phase-Lock Loop:

1. Refer to the A1A1 host/processor and A8 frequency control replacement procedures to remove the A1A1 host/processor and A8 frequency control.
2. Remove the screw ① from the A3 power supply. See Figure 9-7.
3. Remove semi-rigid cable W17 ②.
4. Disconnect coaxial cables W6 ③, W2 ④, W9 ⑤, W19 ⑥, W3 ⑦, and W4 ⑧ from the A2 video processor and A6 YTO phase-lock loop.
5. Remove three screws ⑨ to free the rear panel from the frame.
6. Remove four screws ①⓪ to free the A6 YTO phase-lock loop from the frame.
7. Remove six A11 wiring harness connectors ①② from the A6 YTO phase-lock loop.
8. Carefully remove A6W16 from the two motherboard clips ①① and lift the A6 YTO phase-lock loop high enough to clear the A8 frequency control connector ①③. Remove the A6 YTO phase-lock loop.

To Replace the A6 YTO Phase-Lock Loop:

Notes

- All SMA rigid cable connections must be torqued to 10 inch-pounds.
- If the A6AT1 Isolator was removed, secure with two screws torqued to 3 inch-pounds.

1. Position the A6 YTO phase-lock loop.
2. Press A6W16 into the two motherboard clips ①①.
3. Replace four screws ①⓪ to secure the A6 YTO phase-lock loop to the frame. Torque screws to 20 inch-pounds.
4. Replace three screws ⑨ to secure the rear panel to the frame. Torque screws to 20 inch-pounds.
5. Reconnect the six A11 wiring harness connectors ①②. Make sure no flexible cables are under the A11 wiring harness.
6. Reconnect coaxial cables W2 ④, W9 ⑤, W19 ⑥, W3 ⑦, W4 ⑧.
7. Reconnect W6 ③ on the A2 video processor.
8. Replace semirigid cable W17 ②. Torque connector to 10 inch-pounds.
9. Replace the screw ① in the power supply assembly. Torque screw to 6 inch-pounds.
10. Refer to A1A1 host/processor and A8 frequency control replacement to replace the A1A1 host/processor and A8 frequency control.

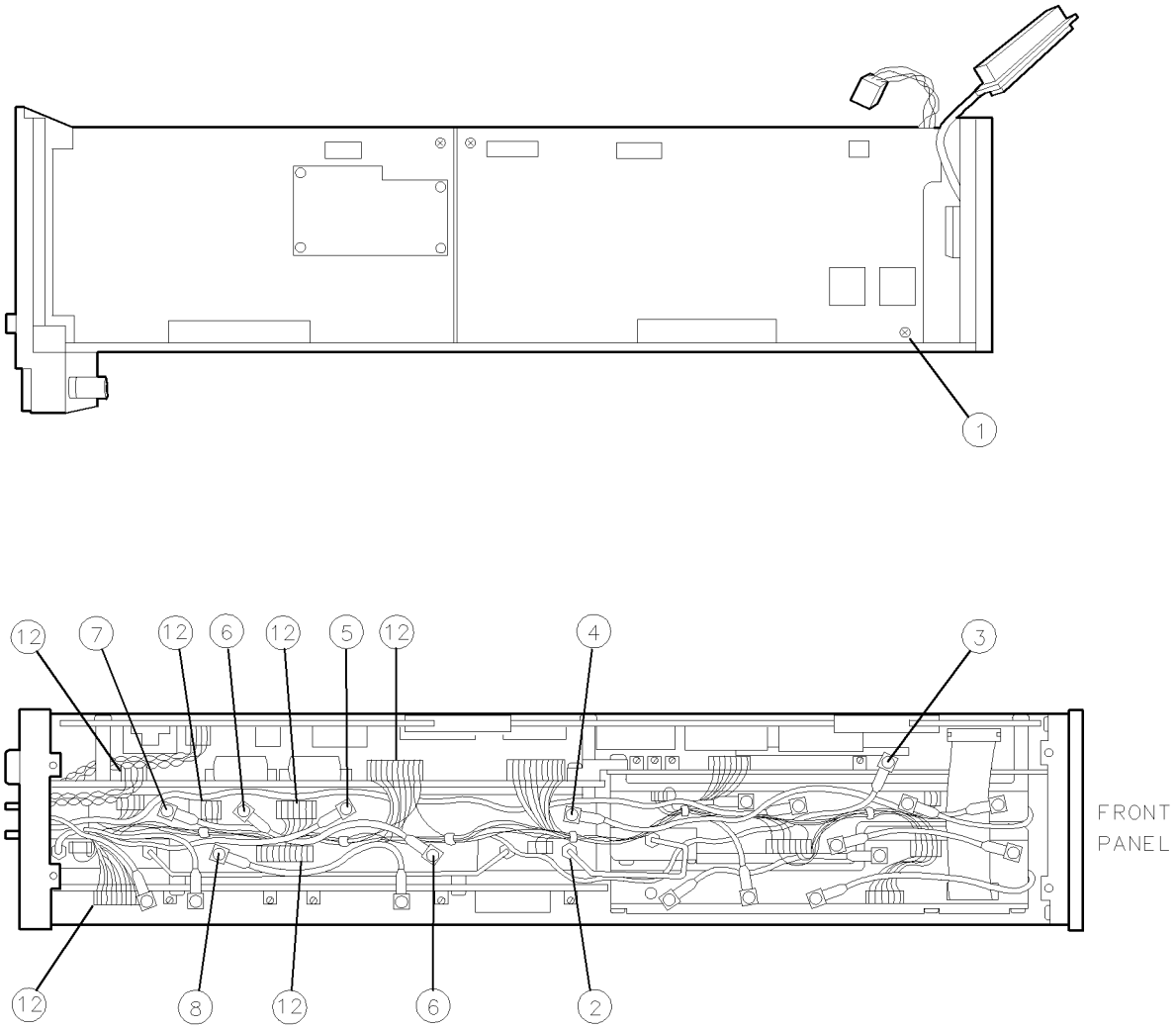

Figure 9-7. A6 YTO Phase-Lock Loop Removal/Replacement (1 of 2)

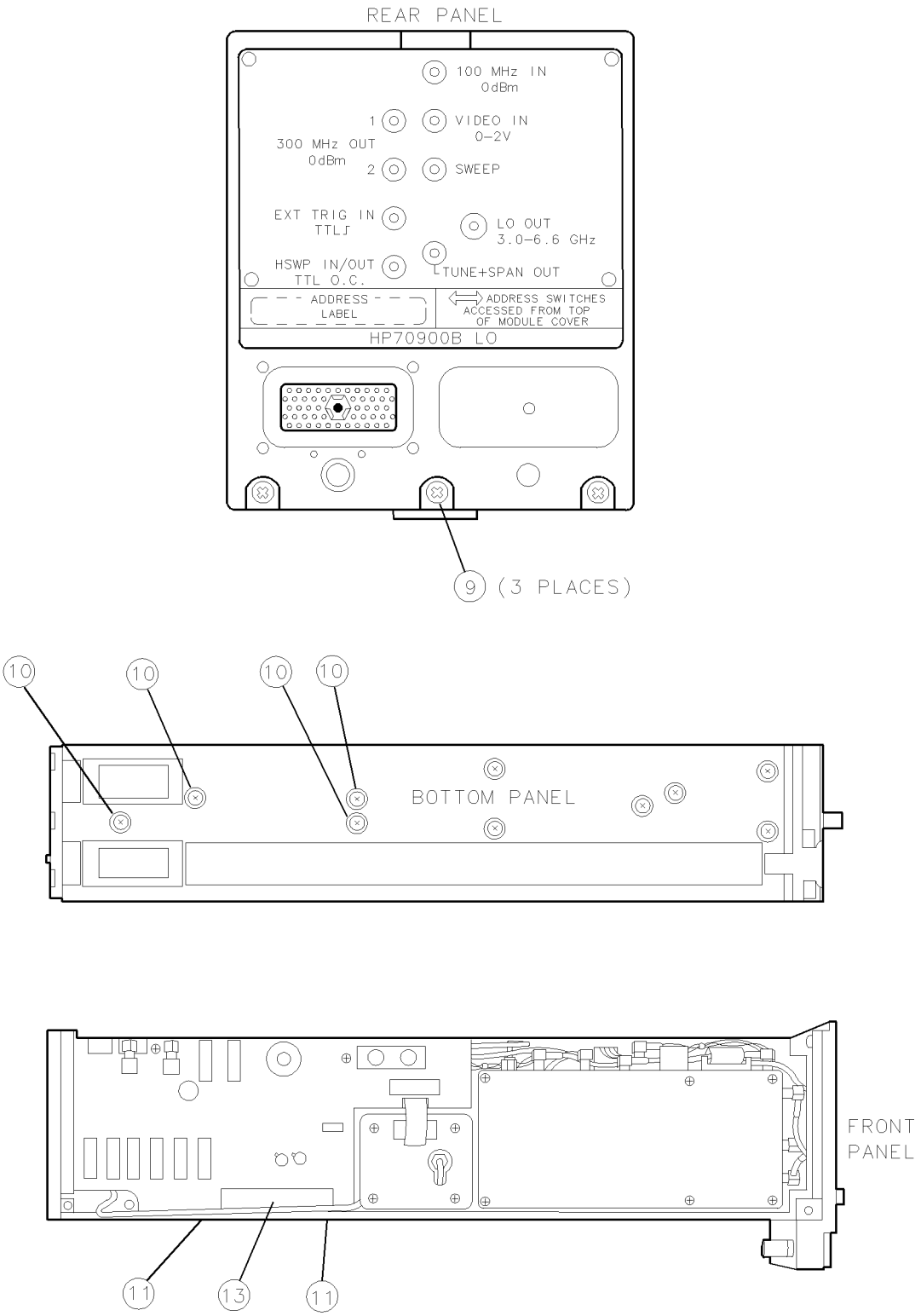

Figure 9-7. A6 YTO Phase-Lock Loop Removal/Replacement (2 of 2)

A6A1 100 MHz Reference

CAUTION

- Use electrostatic discharge (ESD) precautions when working on this assembly. Refer to "Preparing a Static-Safe Work Station" in Chapter 4.
- Gaskets used in this assembly conduct electrical current. Misplaced gaskets may cause electrical shorts. The gaskets are located under the assembly covers and around connectors and feedthroughs. When removing assembly covers, avoid losing gaskets by orienting the assembly with the cover down and then lifting the assembly off the cover.

To Remove the A6A1 100 MHz Reference:

1. Refer to A6 YTO phase-lock loop and A8 frequency control replacement to remove the A8 frequency control and A6 YTO phase-lock loop.
2. Remove seven screws ① to remove the cover from the A6A1 100 MHz reference. See Figure 9-8.
3. Remove three screws ② to free the assembly.
4. Carefully work the board straight up and out of the casting. Do not bend the feedthrough ③ inserted into the back of the assembly. Do not lose any RFI gasket material that may stick to the back of the assembly.

To Replace the A6A1 100 MHz Reference:

1. Replace any RFI gasket material missing from the casting grooves.
2. Carefully position the A6A1 100 MHz reference and press it into place. Do not bend the feedthrough which inserts into the back of the assembly.
3. Replace the three screws ② to secure the assembly. Torque screws to 6 inch-pounds.
4. Position the A6A1 100 MHz reference cover and replace the seven screws ①. Torque screws to 9 inch-pounds.
5. Refer to A6 YTO phase-lock loop and A8 frequency control replacement to replace the A8 frequency control and A6 YTO phase-lock loop.

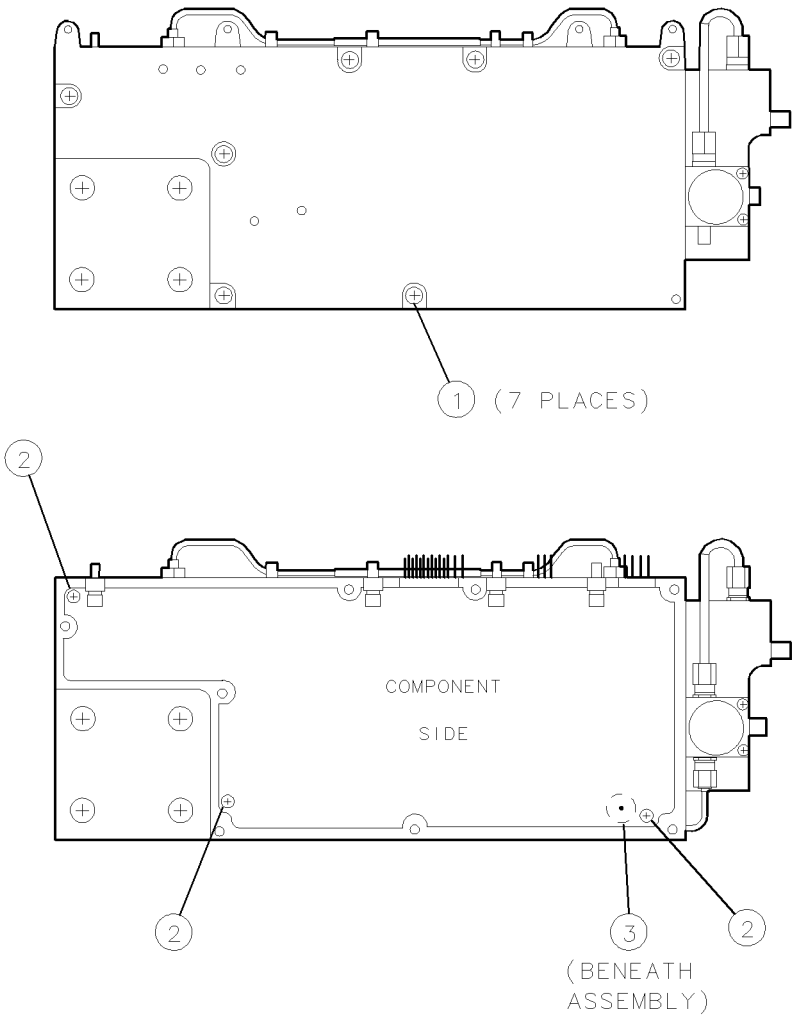

Figure 9-8. A6A1 100 MHz Reference Removal/Replacement

A6A2 YTO Lock

CAUTION

- Use electrostatic discharge (ESD) precautions when working on this assembly. Refer to "Preparing a Static-Safe Work Station" in Chapter 4.
- Gaskets used in this assembly conduct electrical current. Misplaced gaskets may cause electrical shorts. The gaskets are located under the assembly covers and around connectors and feedthroughs. When removing assembly covers, avoid losing gaskets by orienting the assembly with the cover down and then lifting the assembly off the cover.

To Remove the A6A2 YTO Lock:

1. Refer to A6 YTO phase-lock loop and A8 frequency control replacement to remove the A8 frequency control and A6 YTO phase-lock loop.
2. Remove semirigid cables A6W16 ② and A6W18 ③ from the A6 YTO phase-lock loop.
3. Remove the four screws ① securing the A6A5 YTO cover and remove the cover. See Figure 9-9.
4. Remove four screws ④ and with the cover side down, remove the A6A2 YTO lock cover.
5. Disconnect cables A6W2 and A6W3 ⑤ from the A6A2 YTO lock.
6. Remove the screw ⑥ from the assembly and remove the A6A2 YTO lock from the casting.

To Replace the A6A2 YTO Lock:

1. Position the A6A2 YTO lock, press it into place, and replace the screw ⑥ and cables A6W2 and A6W3 ⑤. Ensure that no wires pass directly over the screw; they would be damaged when the cover is tightened. Torque screws to 6 inch-pounds.
2. With the cover-side down, position the A6A2 YTO lock onto the cover and replace the four screws ④. Torque screws to 9 inch-pounds.
3. Replace the A6A5 YTO cover with four screws ① and semirigid cables A6W16 ② and A6W18 ③. Torque cable connectors to 10 inch-pounds. Torque screws to 6 inch-pounds.
4. Refer to A6 YTO phase-lock loop and A8 frequency control replacement to replace the A6 YTO phase-lock loop and A8 frequency control.

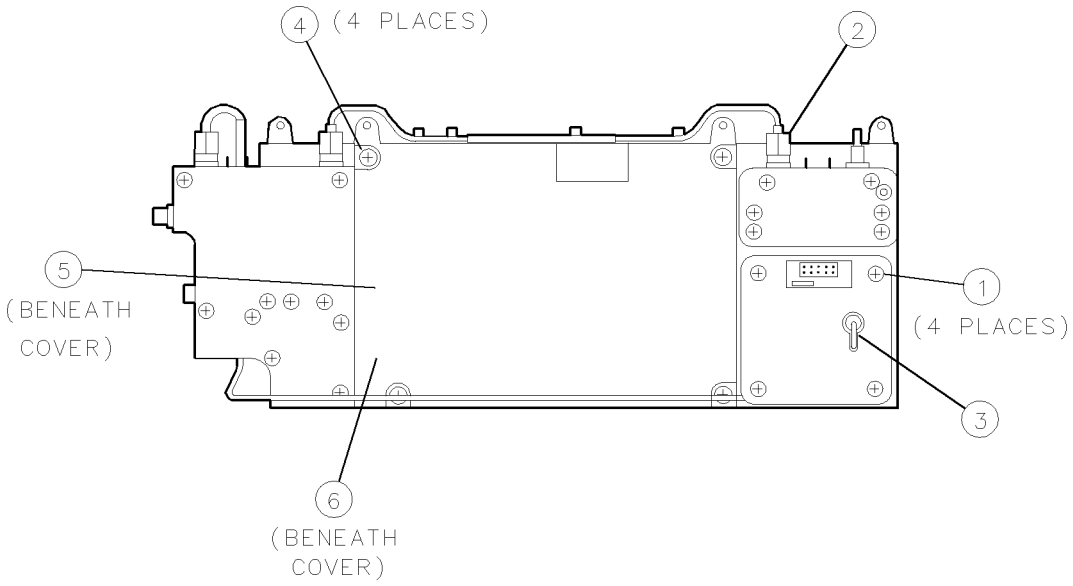

Figure 9-9. A6A2 YTO Lock Removal/Replacement

A6A3 Idler Buffer

CAUTION

- Use electrostatic discharge (ESD) precautions when working on this assembly. Refer to "Preparing a Static-Safe Work Station" in Chapter 4.
- Gaskets used in this assembly conduct electrical current. Misplaced gaskets may cause electrical shorts. The gaskets are located under the assembly covers and around connectors and feedthroughs. When removing assembly covers, avoid losing gaskets by orienting the assembly with the cover down and then lifting the assembly off the cover.

To Remove the A6A3 Idler Buffer:

1. Refer to the A6 YTO phase-lock loop and A8 frequency control replacement procedures to remove the A6 YTO phase-lock loop and A8 frequency control.
2. Remove semirigid cable A6W18 ① from the A6 YTO phase-lock loop. See Figure 9-10.
3. Remove two screws ②, and lift the A6A3 idler buffer from the A6 YTO phase-lock loop.

To Replace the A6A3 Idler Buffer:

1. Position the A6A3 idler buffer, and replace the two screws ②. Torque screws to 9 inch-pounds.
2. Replace semirigid cable A6W18 ① on the A6 YTO phase-lock loop. Torque connectors to 10 inch-pounds.
3. Refer to A6 YTO phase-lock loop and A8 frequency control replacement to replace the A6 YTO phase-lock loop and A8 frequency control.

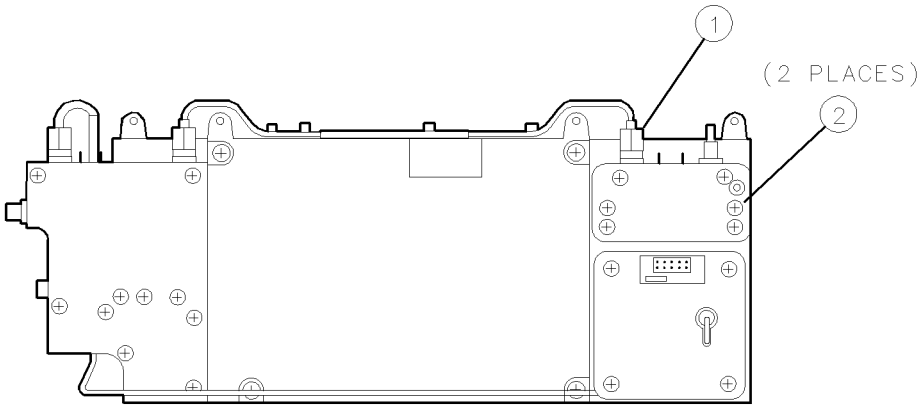

Figure 9-10. A6A3 Idler Buffer Removal/Replacement

A6A4 YTO Lock Microcircuit

CAUTION

- Use electrostatic discharge (ESD) precautions when working on this assembly. Refer to "Preparing a Static-Safe Work Station" in Chapter 4.
- Gaskets used in this assembly conduct electrical current. Misplaced gaskets may cause electrical shorts. The gaskets are located under the assembly covers and around connectors and feedthroughs. When removing assembly covers, avoid losing gaskets by orienting the assembly with the cover down and then lifting the assembly off the cover.

To Remove the A6A4 YTO Lock Microcircuit:

1. Refer to the A6 YTO phase-lock loop and A8 frequency control replacement procedure to remove the A6 YTO phase-lock loop and A8 frequency control.
2. Remove semirigid cables A6W16 ③ and A6W18 ② the from A6A4 YTO lock microcircuit.
3. Remove four screws ④ from the A6A2 YTO lock's cover. With the cover side down, remove the cover.
4. Disconnect cables A6W2 and A6W3 ⑤ from connectors A6A2 YTO lock J1 and A6A2 YTO lock J2 respectively on the A6A2 YTO lock.
5. Remove three screws ⑥ securing the A6A4 YTO lock microcircuit. (Two of the screws are under the A6A2 YTO lock cover that was removed in step 3.)
6. Lift the A6A4 YTO lock microcircuit straight up to remove it. Do not bend the feedthrough pin located under the assembly. Chromeric gaskets may drop out.
7. Turn the A6A4 YTO lock microcircuit over, remove the two screws ①, disconnect semirigid cable A6W1 ⑦, and remove the A6AT1 isolator.

To Replace the A6A4 YTO Lock Microcircuit:

1. Assemble the A6AT1 isolator to A6A4 YTO lock microcircuit. Connect semirigid cable A6W1 ⑦ and replace the two screws ①. Torque the cable connector to 10 inch-pounds; torque the screws to 3 inch-pounds.
2. If the feedthrough pin has been bent, carefully straighten it.
3. Position the A6A4 YTO lock microcircuit and press straight down.
4. Replace three screws ⑥ securing the assembly. Torque screws to 6 inch-pounds.
5. Reconnect cables A6W2 and A6W3 ⑤ to the A6A2 YTO lock.
6. With the cover side down and gaskets in place, position the A6A2 YTO lock onto the cover and replace the four screws ④. Torque screws to 9 inch-pounds.
7. Reconnect semirigid cables A6W16 ③ and A6W18 ② to the A6A4 YTO lock microcircuit. Torque connectors to 10 inch-pounds.
8. Refer to the A6 YTO phase-lock loop and A8 frequency control replacement procedures to replace the A6 YTO phase-lock loop and A8 frequency control.

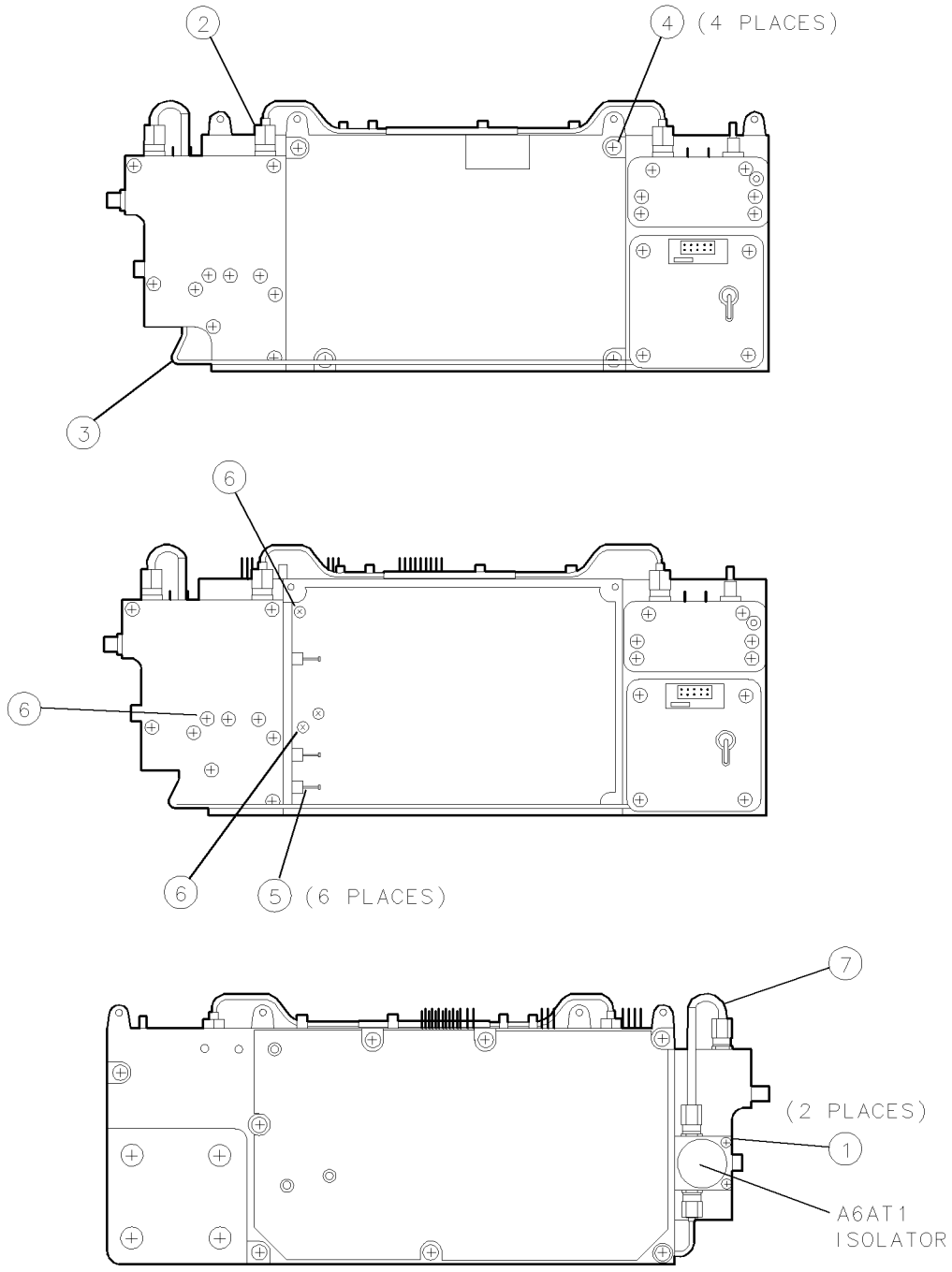

Figure 9-11. A6A4 YTO Lock Microcircuit Removal/Replacement

A6A5 YTO

CAUTION

- Use electrostatic discharge (ESD) precautions when working on this assembly. Refer to "Preparing a Static-Safe Work Station" in Chapter 4.
- When moving A6W16, avoid placing any permanent bends in the cable. Minor damage to the cable could cause additional problems.
- The A6A5 YTO is not secured to its enclosure can. Use one of the screws removed in step 4 to secure the YTO to its can.

To Remove the A6A5 YTO:

1. Refer to the A1 and A3 power supply replacement procedures to remove the A1 and A3 power supply.
2. Remove ribbon cable W15 ① as illustrated in Figure 9-12. Remove the four screws ② securing the A6A5 YTO cover and remove the cover.
3. Disconnect A6W16 ③ at the A6A5 YTO and free the cable from the two motherboard clips ④. Gently swing the cable down and away from the A6A5 YTO.
4. Remove the four screws and nylon washers ⑤, ⑥, ⑦, and ⑧ that secure the A6A5 YTO to the casting. The screws are located on the back side of the A6 YTO phase-lock loop.
5. Carefully remove the YTO and its enclosure can from the A6 YTO phase-lock loop casting. Do not lose the nylon insulator located behind the A6A5 YTO.

To Replace the A6A5 YTO:

1. Ensure that the nylon insulator is located in the A6 YTO phase-lock loop casting. The screws securing the A6A5 YTO to the casting must pass through the A6 YTO phase-lock loop casting and insulator, then into the A6A5 YTO.
2. Remove the screw securing the A6A5 YTO to its enclosure can. (The screw is located in one of four holes on the back of the can.)
3. Insert the A6A5 YTO into the A6 YTO phase-lock loop casting. Orient the assembly as shown in See Figure 9-12. The RF SMA connector should be located toward the front of the module and the ribbon cable connector toward the top of the module.
4. From the back side of the A6 YTO phase-lock loop casting, use two small-blade screwdrivers to align the holes in the A6 YTO phase-lock loop casting, insulator, and A6A5 YTO.
5. Use the four screws ⑤, ⑥, ⑦, and ⑧ and nylon washers to secure the A6A5 YTO to the casting. Do not tighten the four screws.
6. To seat the A6A5 YTO in the casting, turn the module so that the A6A5 YTO hangs from its four securing screws. Tighten the four securing screws in the following order: ⑤, ⑦, ⑥, and ⑧. Torque screws to 9 inch-pounds.
7. Reconnect A6W16 ③ to the A6A5 YTO. Secure the cable to the two motherboard clips ④. Torque connector to 10 inch-pounds.
8. Replace the A6A5 YTO cover with four screws ②. Torque screws to 6 inch-pounds.
9. Replace ribbon cable W15 ①. (Only one end of this cable is properly keyed to connect to the A6A5 YTO.)

10. Refer to A1 and A3 power supply replacement to replace the A1A1 host/processor and A3 power supply.

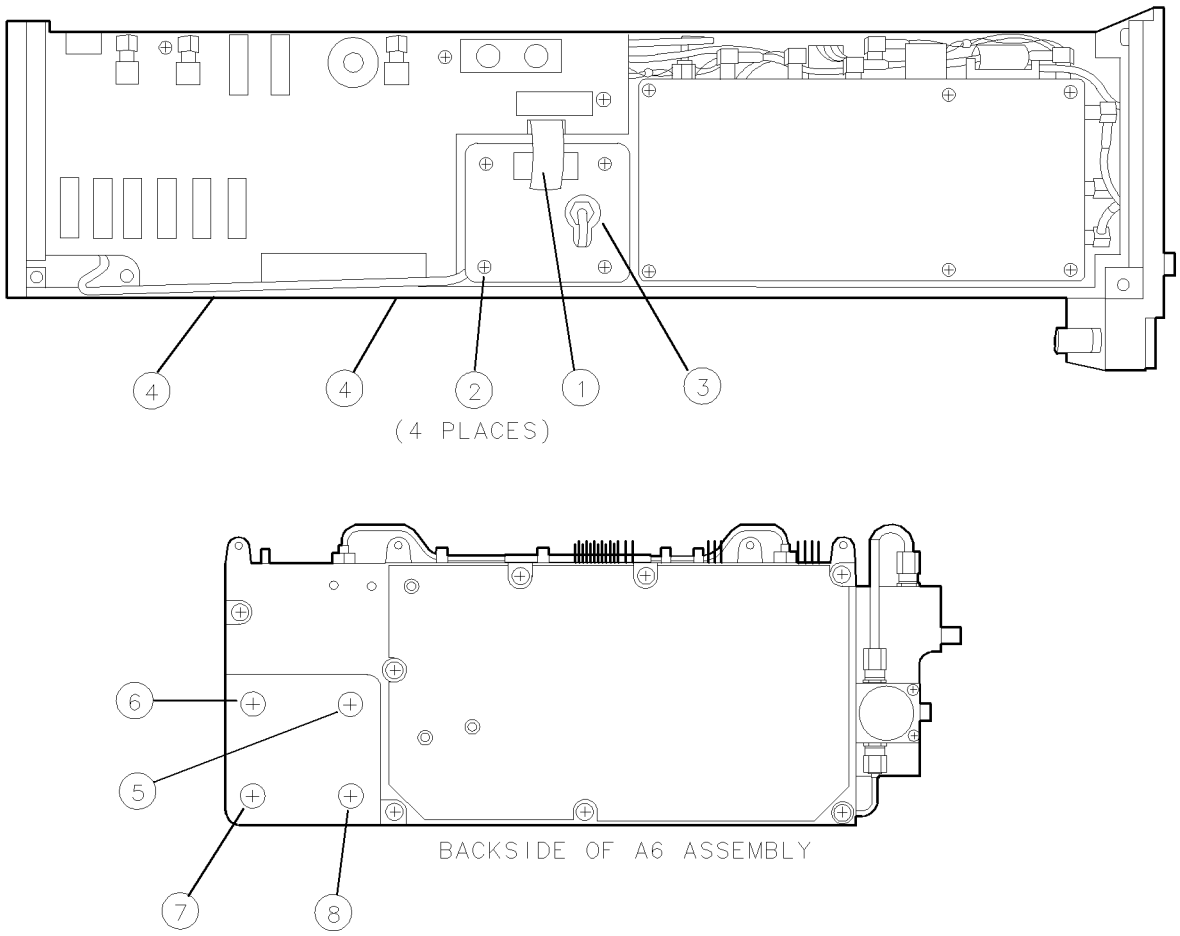

Figure 9-12. A6A5 YTO Removal/Replacement

A7 FRAC'N Synthesizer for Serial #3219A01388 and Above

Note The A7 FRAC'N synthesizer used to contain the the A7A1 FFS phase lock loop and the A7A2 FFS analog assemblies, but now the A7 FRAC'N synthesizer (for Serial #3219A01388 and above) only contains the A7A1 FFS phase lock loop; the A7A2 FFS analog is no longer included in this A7 FRAC'N synthesizer assembly.

CAUTION Use electrostatic discharge (ESD) precautions when working on this assembly. Refer to "Preparing a Static-Safe Work Station" in Chapter 4.

To Remove the A7 FRAC'N Synthesizer:

1. Remove three screws ① while the module rests on its right side. See Figure 9-13.
2. Disconnect W3 ② and W1 ③ from the A7 FRAC'N synthesizer.
3. Disconnect the two A11 wiring harness connectors ⑤ and the W14 ribbon cable ④.
4. Lift the A7 FRAC'N synthesizer about one centimeter and carefully rotate the center end out of the frame. The A7 FRAC'N synthesizer fits tightly, but its removal does not require force or removing the front panel.

To Replace the A7 FRAC'N Synthesizer:

1. Insert the front end of the A7 FRAC'N synthesizer into the frame. Lift the assembly about one centimeter and rotate the center end of the assembly into place.
2. Reconnect the W14 ribbon cable ④ and the two A11 wiring harness connectors ⑤.
3. Reconnect W1 ③ and W3 ② to the A7 FRAC'N synthesizer.
4. Replace three screws ① while the module rests on its right side. Torque screws to 20 inch-pounds.

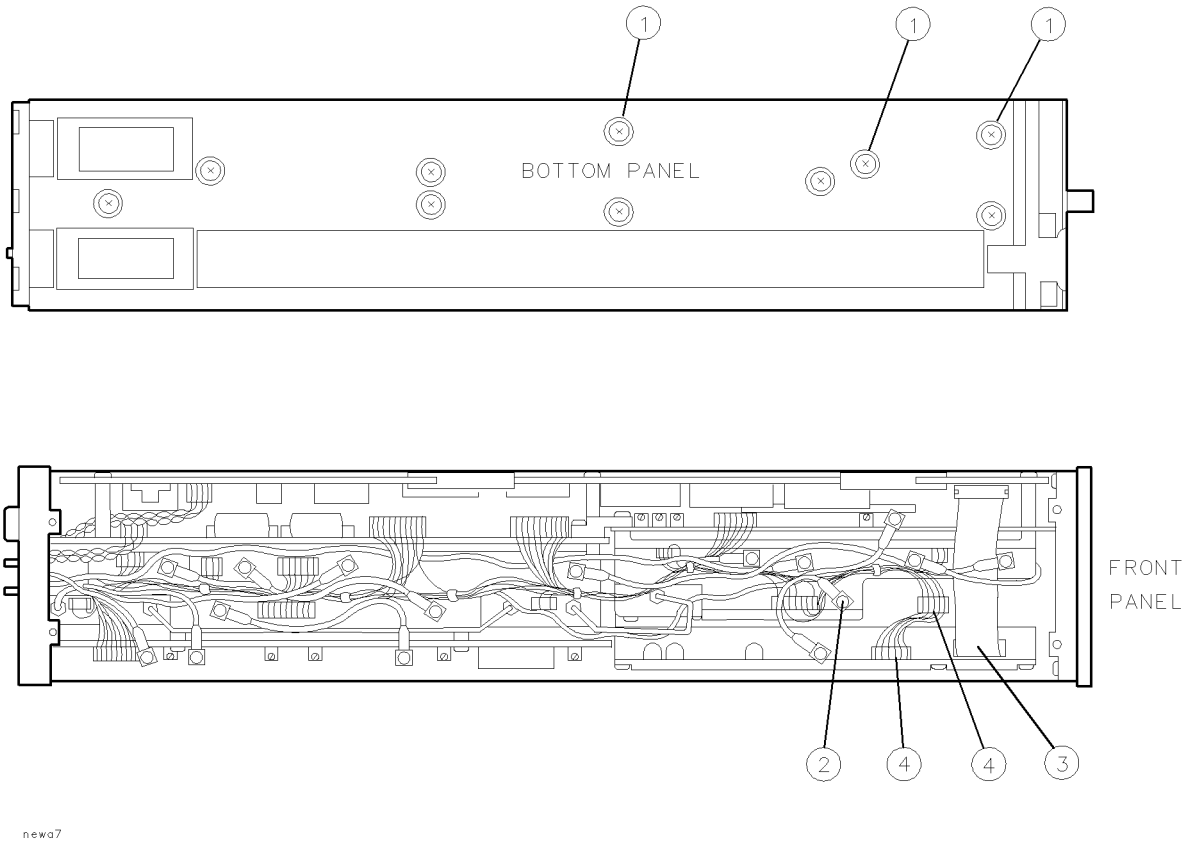

Figure 9-13.
A7 FRAC'N Synthesizer Removal/Replacement for Serial #3219A01388 and Above

A7A1 FFS Phase Lock Loop for Serial #3219A01388 and Above

CAUTION

- Use electrostatic discharge (ESD) precautions when working on this assembly. Refer to "Preparing a Static-Safe Work Station" in Chapter 4.
- Gaskets used in this assembly conduct electrical current. Misplaced gaskets may cause electrical shorts. The gaskets are located under the assembly covers and around connectors and feedthroughs. When removing assembly covers, avoid losing gaskets by orienting the assembly with the cover down and then lifting the assembly off the cover.

To Remove the A7A1 FFS Phase Lock Loop:

1. Refer to A7 FRAC'N synthesizer replacement to remove the A7 FRAC'N synthesizer.
2. Disconnect cables ①, ②, ③, and ④ from the A7A1 FFS phase lock loop. See Figure 9-14.
3. Disconnect cable A7W5 from the assembly jack ⑤.
4. Remove the four screws ⑥ and with the cover side down remove the assembly from the cover. The nonconductive, rubber sleeves used on this cover sometimes stick to the VCO casting. Locate all five sleeves and reserve them for reassembly.
5. Remove the one screw ⑦ from the assembly, then remove the A7A1 FFS phase lock loop.

To Replace the A7A1 FFS Phase Lock Loop:

1. Position the A7A1 FFS phase lock loop in the casting and replace the one screw ⑦. Torque the screw to 6 inch-pounds.
2. Refer to Figure 9-14 for the location of rubber sleeves on the VCO cover ⑧. With the cover side down, position the assembly onto the cover (use the adjustment hole as a guide). Replace the four screws ⑥. Torque screws to 9 inch-pounds.
3. Reconnect A7W5 to the assembly jack ⑤.
4. Reconnect A7W4 ①, A7W1 ②, A7W3 ③, A7W2 ④.
5. Refer to A7 FRAC'N synthesizer replacement to replace the A7 FRAC'N synthesizer.

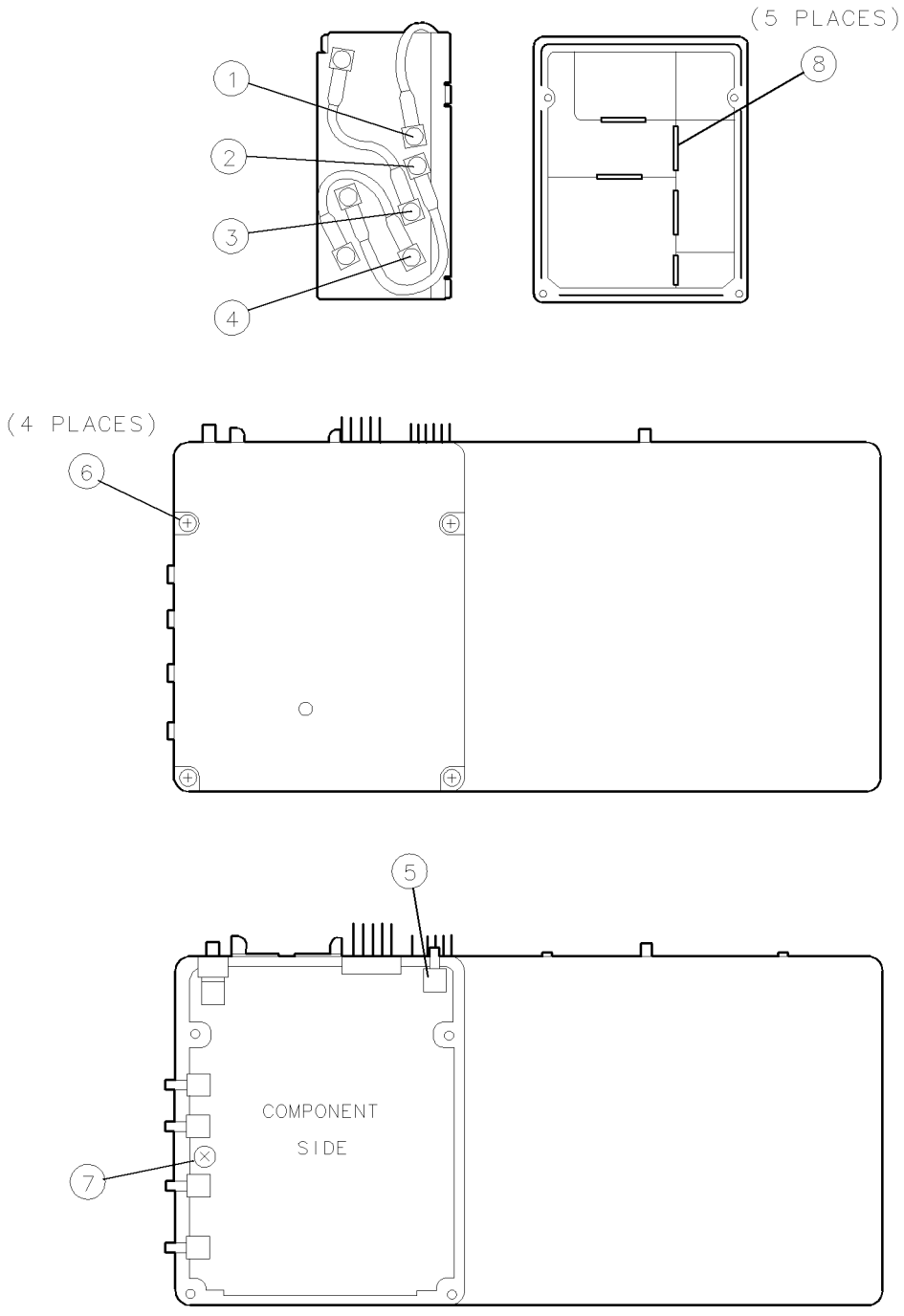

Figure 9-14.
A7A1 FFS Phase Lock Loop Removal/Replacement for Serial #3219A01388 and Above

A7 FRAC'N Synthesizer for Serial #3144A01387 and Below

Note The A7 FRAC'N synthesizer used to contain the the A7A1 FFS phase lock loop and the A7A2 FFS analog assemblies, but now the A7 FRAC'N synthesizer (for Serial #3219A01388 and above) only contains the A7A1 FFS phase lock loop; the A7A2 FFS analog is no longer included in this A7 FRAC'N synthesizer assembly.

CAUTION Use electrostatic discharge (ESD) precautions when working on this assembly. Refer to "Preparing a Static-Safe Work Station" in Chapter 4.

To Remove the A7 FRAC'N Synthesizer:

1. Remove three screws ① while the module rests on its right side. See Figure 9-15.
2. Disconnect W3 ② and W1 ③ from the A7 FRAC'N synthesizer.
3. Disconnect the two A11 wiring harness connectors ⑤ and the W14 ribbon cable ④.
4. Lift the A7 FRAC'N synthesizer about one centimeter and carefully rotate the center end out of the frame. The A7 FRAC'N synthesizer fits tightly, but its removal does not require force or removing the front panel.

To Replace the A7 FRAC'N Synthesizer:

1. Insert the front end of the A7 FRAC'N synthesizer into the frame. Lift the assembly about one centimeter and rotate the center end of the assembly into place.
2. Reconnect the W14 ribbon cable ④ and the two A11 wiring harness connectors ⑤.
3. Reconnect W1 ③ and W3 ② to the A7 FRAC'N synthesizer.
4. Replace three screws ① while the module rests on its right side. Torque screws to 20 inch-pounds.

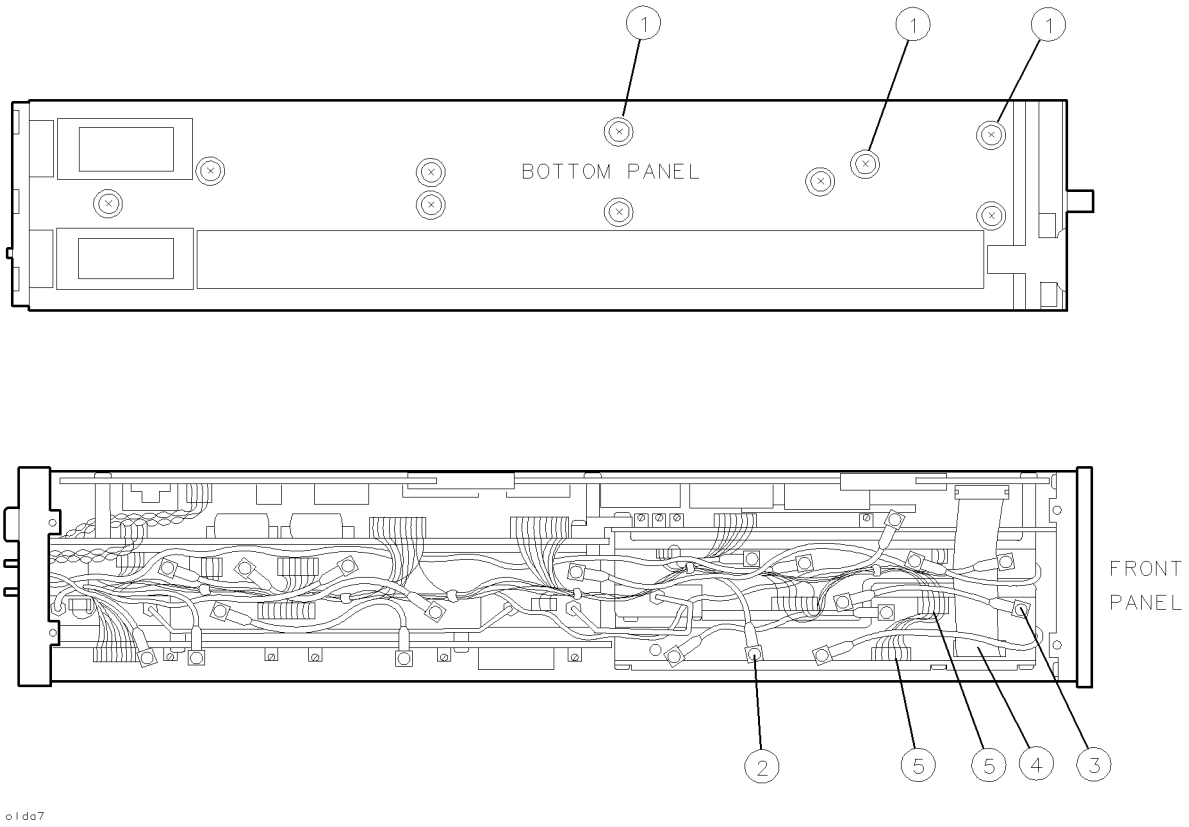

Figure 9-15.
A7 FRAC'N Synthesizer Removal/Replacement for Serial #3144A01387 and Below

A7A1 FFS Phase Lock Loop for Serial #3144A01387 and Below

CAUTION

- Use electrostatic discharge (ESD) precautions when working on this assembly. Refer to "Preparing a Static-Safe Work Station" in Chapter 4.
- Gaskets used in this assembly conduct electrical current. Misplaced gaskets may cause electrical shorts. The gaskets are located under the assembly covers and around connectors and feedthroughs. When removing assembly covers, avoid losing gaskets by orienting the assembly with the cover down and then lifting the assembly off the cover.

To Remove the A7A1 FFS Phase Lock Loop:

1. Refer to A7 FRAC'N synthesizer replacement to remove the A7 FRAC'N synthesizer.
2. Disconnect cables ①, ②, ③, and ④ from the A7A1 FFS phase lock loop. See Figure 9-16.
3. Disconnect cable A7W5 from the assembly jack ⑤.
4. Remove the four screws ⑥ and with the cover side down remove the assembly from the cover. The nonconductive, rubber sleeves used on this cover sometimes stick to the VCO casting. Locate all five sleeves and reserve them for reassembly.
5. Remove the one screw ⑦ from the assembly, then remove the A7A1 FFS phase lock loop.

To Replace the A7A1 FFS Phase Lock Loop:

1. Position the A7A1 FFS phase lock loop in the casting and replace the one screw ⑦. Torque the screw to 6 inch-pounds.
2. Refer to Figure 9-16 for the location of rubber sleeves on the VCO cover ⑧. With the cover side down, position the assembly onto the cover (use the adjustment hole as a guide). Replace the four screws ⑥. Torque screws to 9 inch-pounds.
3. Reconnect A7W5 to the assembly jack ⑤.
4. Reconnect A7W4 ①, A7W1 ②, A7W3 ③, A7W2 ④.
5. Refer to A7 FRAC'N synthesizer replacement to replace the A7 FRAC'N synthesizer.

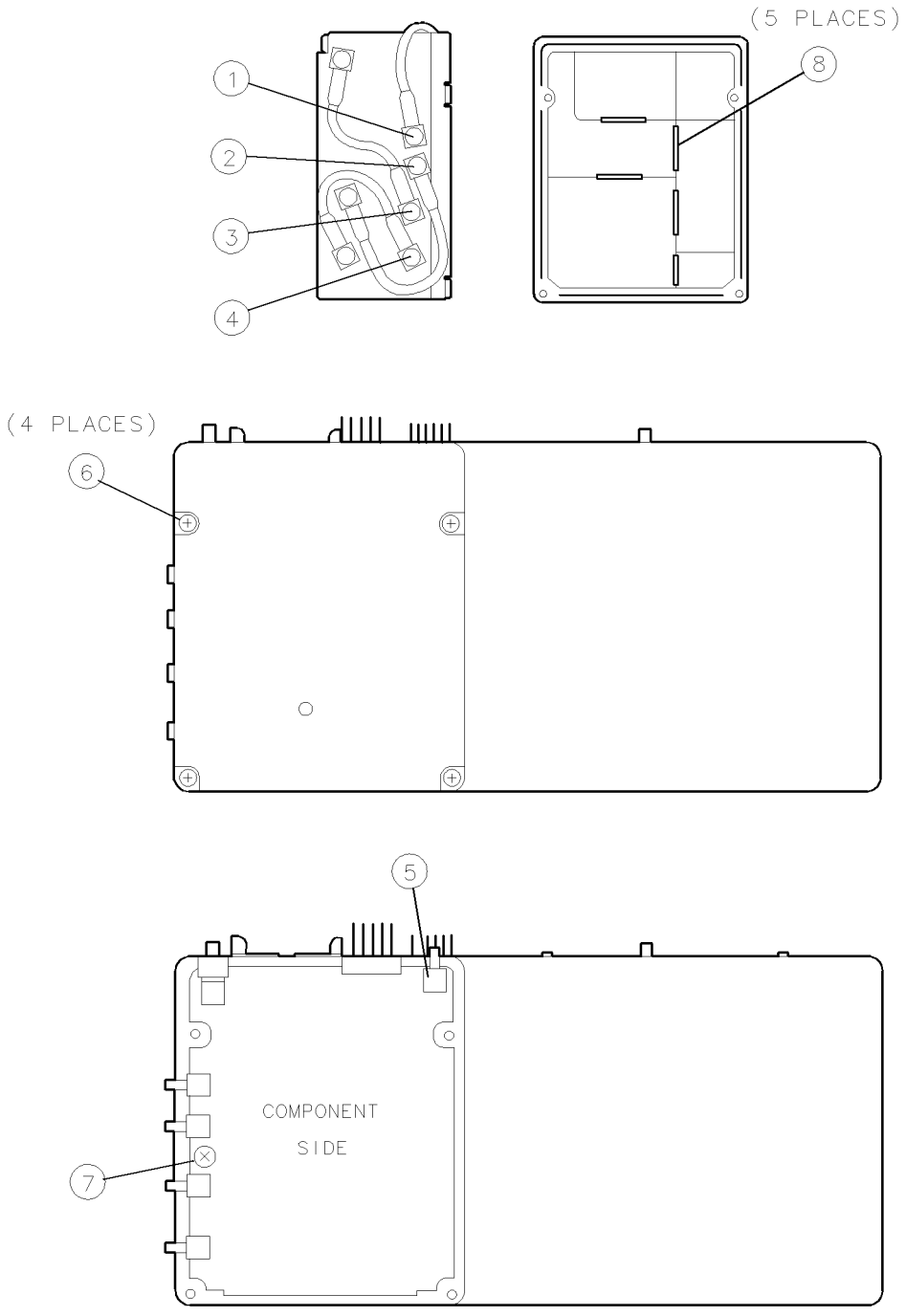

Figure 9-16.
A7A1 FFS Phase Lock Loop Removal/Replacement for Serial #3144A01387 and Below

A7A2 FFS Analog for Serial #3144A01387 and Below

CAUTION

- Use electrostatic discharge (ESD) precautions when working on this assembly. Refer to "Preparing a Static-Safe Work Station" in Chapter 4.
- Gaskets used in this assembly conduct electrical current. Misplaced gaskets may cause electrical shorts. The gaskets are located under the assembly covers and around connectors and feedthroughs. When removing assembly covers, avoid losing gaskets by orienting the assembly with the cover down and then lifting the assembly off the cover.

To Remove the A7A2 FFS Analog:

1. Refer to the A7 FRAC'N synthesizer replacement procedure to remove the A7 FRAC'N synthesizer.
2. Disconnect cables ①, ②, and ③ from the A7A2 FFS analog. Refer to Figure 9-17.
3. Disconnect A7W5 and A7W4 from the assembly jacks ④ ⑤.
4. Remove the six screws ⑥, and with the cover side down, remove the assembly from the cover.
5. Remove the one screw ⑦ from the assembly, then remove the A7A2 FFS analog.

To Replace the A7A2 FFS Analog:

1. If more heat sink compound is needed, apply a small amount to the two IC heat sink posts.
2. Position the A7A2 FFS analog in the casting and replace the one screw ⑦. Torque the screw to 6 inch-pounds.
3. With the cover side down, position the assembly onto the cover. (Use the adjustment holes as a guide.) Replace the six screws ⑥. Torque screws to 9 inch-pounds.
4. Reconnect A7W4 ⑤ and A7W5 ④.
5. Reconnect A7W2 ③, A7W1 ②, and A7W3 ① to the A7A2 FFS analog.
6. Refer to the A7 FRAC'N synthesizer replacement procedure to replace the A7 FRAC'N synthesizer.

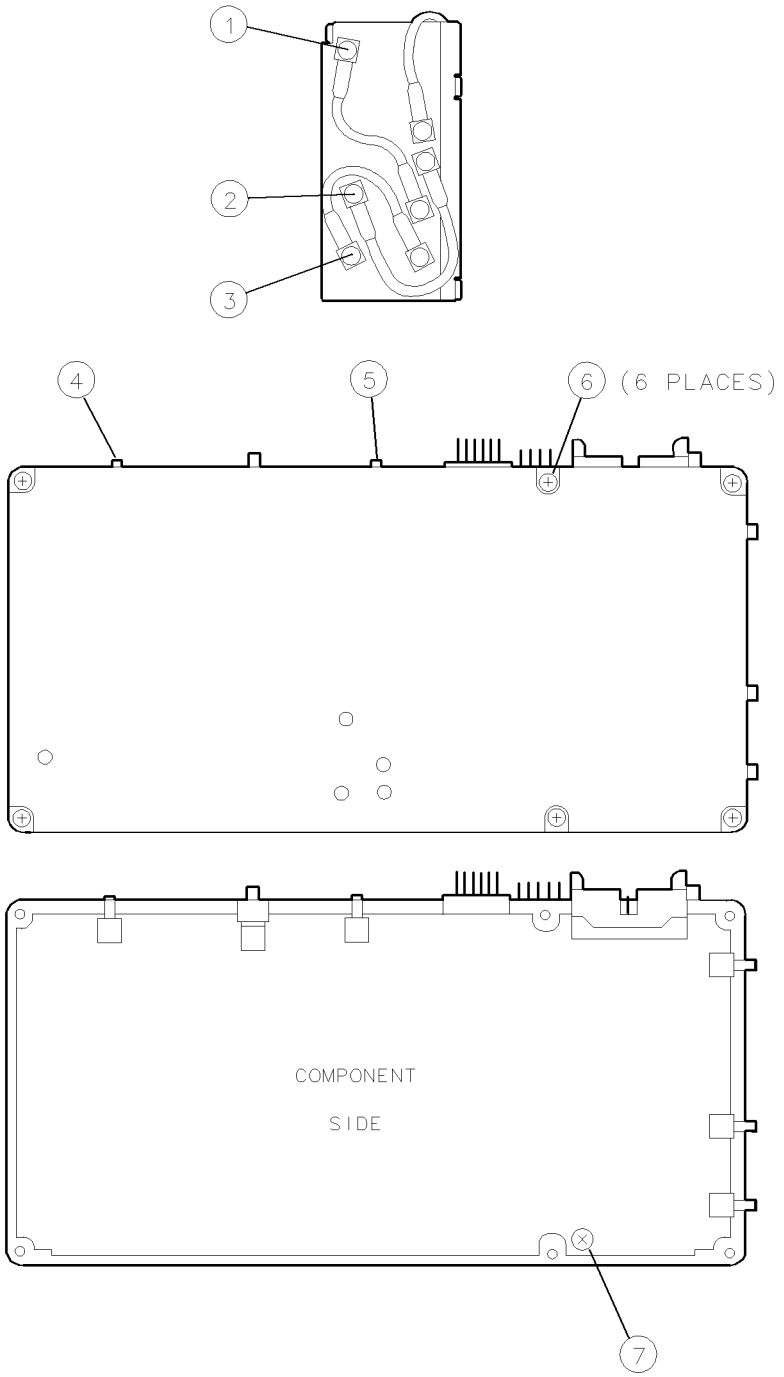

Figure 9-17. A7A2 FFS Analog Removal/Replacement for Serial #3144A01387 and Below

A8 Frequency Control

CAUTION Use electrostatic discharge (ESD) precautions when working on this assembly. Refer to "Preparing a Static-Safe Work Station" in Chapter 4.

To Remove the A8 Frequency Control:

1. Disconnect A11 wiring harness ① and ribbon cable W15 ②. See Figure 9-18.
2. Disconnect coaxial cables W10 ③, W12 ④, and W4 ⑤ from the A8 frequency control.
3. Remove the three screws ⑥ from the assembly.
4. Carefully work the A8 frequency control out of its motherboard connector.

To Replace the A8 Frequency Control:

1. Insert the A8 frequency control into its motherboard connector, taking care that the pins match the connector.
2. Replace the three screws ⑥. Torque the screws ⑥ to 6 inch-pounds.
3. Reconnect coaxial cables W4 ⑤, W12 ④, and W10 ③.
4. Reconnect A11 wiring harness ① and ribbon cable W15 ② on the A8 frequency control.

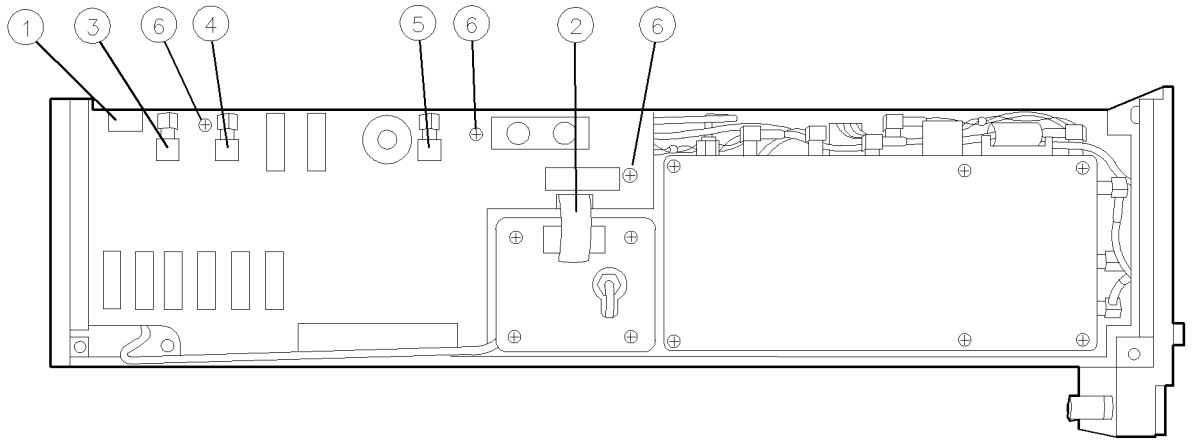

Figure 9-18. A8 Frequency Control Removal/Replacement

A9 Front Panel

CAUTION Use electrostatic discharge (ESD) precautions when working on this assembly. Refer to "Preparing a Static-Safe Work Station" in Chapter 4.

To Remove the A9 Front Panel:

1. Use a 9/16 inch nut driver to remove the nut securing the front panel calibrator jack. Be careful not to scratch the front panel.
2. Remove two 4 mm cap-screws ① securing the front frame and A9 front panel to the module. See Figure 9-19.
3. Remove the four screws and flat washers securing the A9 front panel to the faceplate.

To Replace the HP 70900B Local Oscillator Source:

1. Position the A9 front panel on the faceplate, and secure it with four screws and flat washers. Torque screws to 6 inch-pounds.
2. Secure the front frame using two 4 mm cap-screws ①. Torque cap-screws to 20 inch-pounds.
3. Use a 9/16 inch nut driver to tighten the nut securing the calibrator jack to the front panel. Torque the nut to 20 inch-pounds.

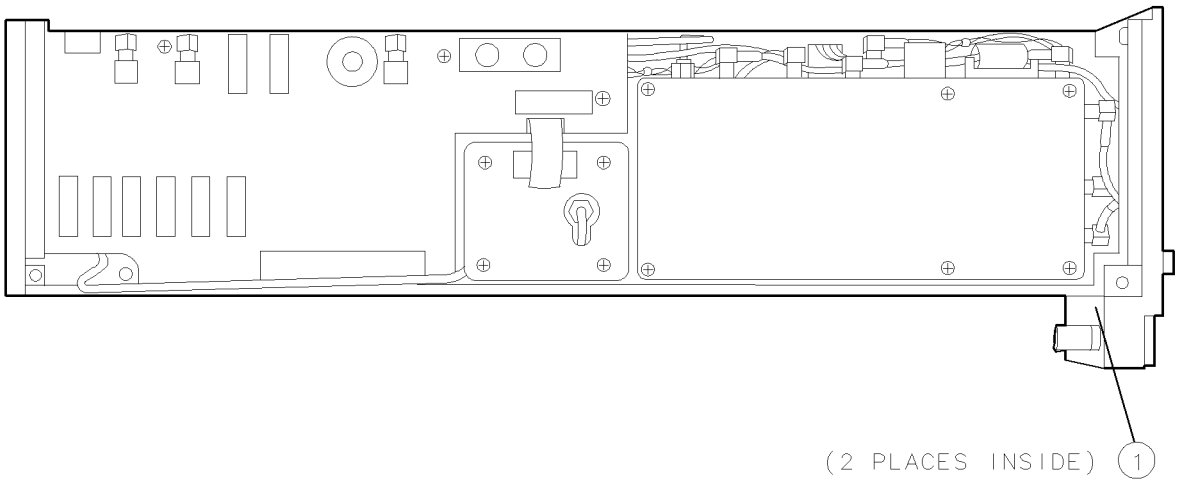

Figure 9-19. A9 Front Panel Removal/Replacement

10

Overall Parts Identification Drawings

This chapter contains information on all overall parts identification drawings that should be used when performing the troubleshooting procedures described in this service guide.

This chapter contains the following sections:

- "Front View Identification"
- "Rear View Identification"
- "Top View Identification"
- "Bottom View Identification"
- "Side View Identification"
- "Side View Identification (A4 Idler Phase-Lock Loop)"
- "Side View Identification (A6 YTO Phase-Lock Loop)"
- "Side View Identification (A7 FRAC'N Synthesizer)"

Because this service guide is part of an Option OB3 package which consists of two manuals, refer to Manual 2 of this option set for information on part listings and schematics.

Manual 2 contains packets of component-level repair information for each local oscillator source board assembly that has field-replaceable parts. Each packet includes the parts list, component-location drawing, and schematics for a specific board-assembly part number. Manual 2 also contains a table that can be used to cross reference different board assemblies that have different serial prefix breaks.

Front View Identification

Overall Parts Identification Drawing, Front View (A9 Front Panel)

Item	HP Part Number	C D	Qty	Description	Mfr Code	Mfr Part Number
1	70900-00015	9	1	FACEPLATE, FRONT	28480	70900-00015
2	70900-20097	9	1	FRAME, FRONT	28480	70900-20097
3	0590-1251	6	1	NUT-SPCLY 15/32-THD .1-IN-THK .562-WD	28480	0590-1251
4	5021-3290	7	1	LATCH SCREW	28480	5021-3290
5	0900-0012	4	1	O-RING .364-IN-ID .07-IN-XSECT-DIA NTRL	28480	0900-0012
6	0510-1244	9	1	RETAINER-PUSH ON CIRCULAR-EXT	28480	0510-1244
7	0515-2051	8	4	SCREW-MACH M3 X 0.5 6MM-LG PAN-HD	28480	0510-0886
8	0515-1079	8	4	SCREW-MACH M3 X 0.5 8MM-LG PAN-HD	28480	0515-1079
9	3050-0105	6	4	WASHER-FL MTLC NO.4 .125-IN-ID	28480	3050-0105
10	2190-0104	0	1	WASHER-LK T 1/2IN .505-IN-ID	28480	2190-0104

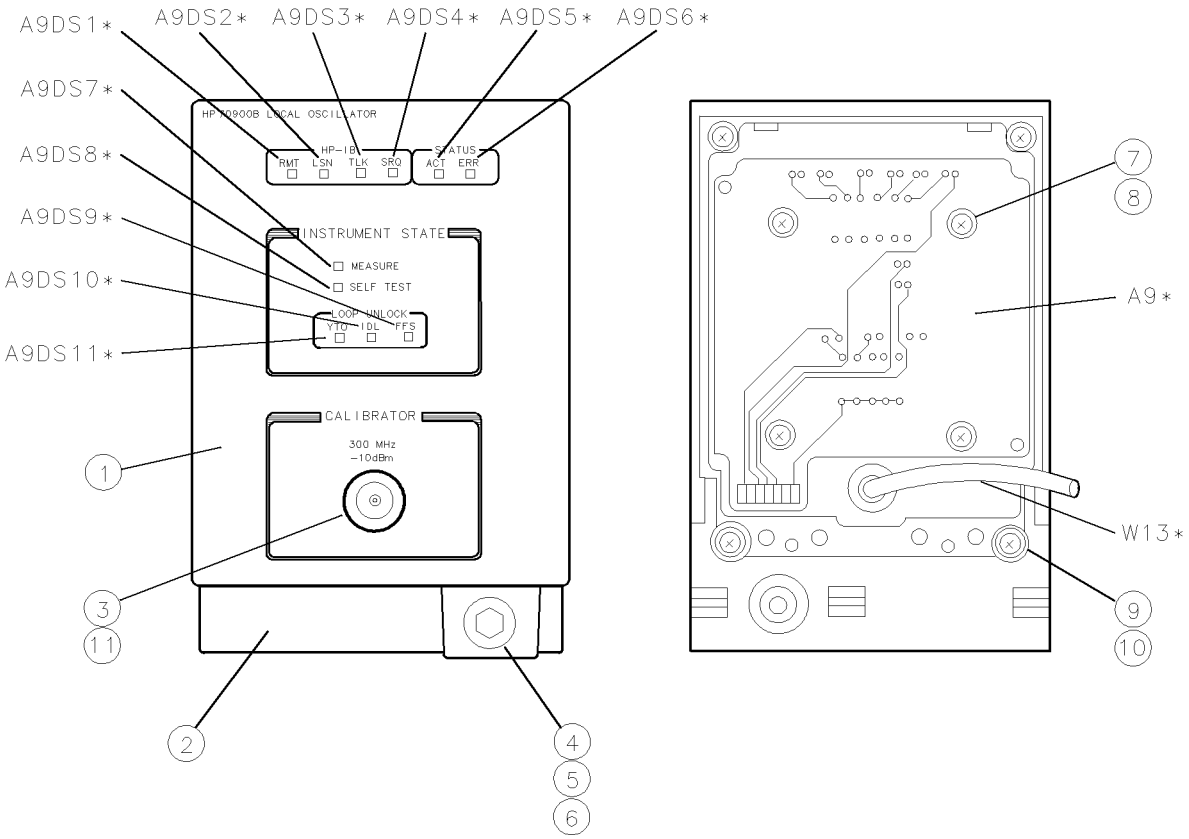

* Refer to Replaceable Parts List for part numbers

Figure 10-1. Overall Parts Identification Drawing, Front View (A9 Front Panel)

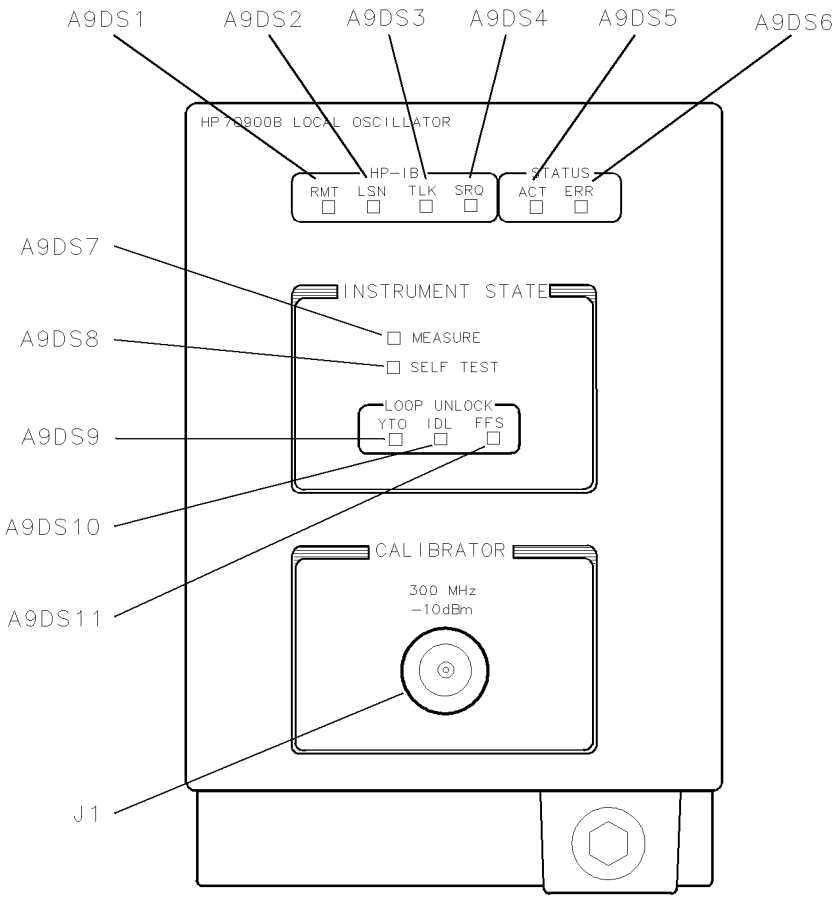

Figure 10-2. Overall Parts Identification Drawing, Front View

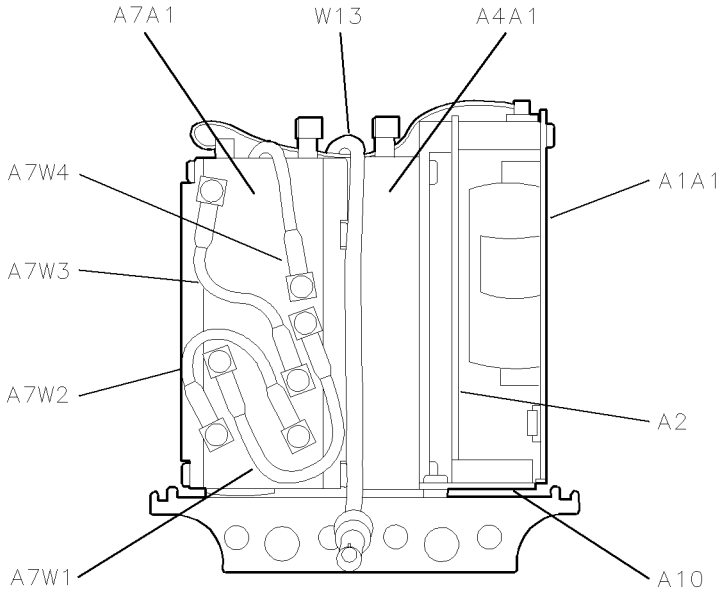

Figure 10-3. Overall Parts Identification Drawing, Front View (Panel Removed)

Rear View Identification

Overall Parts Identification Drawing, Rear View (Rear-Frame)

Item	HP Part Number	C D	Qty	Description	Mfr Code	Mfr Part Number
1	70900-00016	0	1	FACEPLATE, REAR	28480	70900-00016
2	70900-20030	0	1	FRAME, REAR	28480	70900-20030
3	2950-0078	9	8	NUT-HEX-DBL-CHAM 10-32-THD .067-IN-THK	28480	2950-0078
4	2190-0124	4	8	WASHER-LK INTL T NO.10 .195-IN-ID	28480	2190-0124
5	0515-1069	6	3	SCREW-MACH M4 X 0.7 10MM-LG PAN-HD	28480	0515-1114
6	0515-1146	0	4	SCREW-MACH M3 X 0.5 6MM-LG PAN-HD	28480	0515-0886
7	5001-5835	8	2	BAR-CONNECTOR	28480	5001-5835
8	1460-2095	4	4	SPRING-CPRSN 5.49-MM OD 16.8-MM-OA-LG	28480	1460-2095
9	0535-0042	5	4	NUT-HEX PLSTC-LKG M3 X 0.5 4MM-THK	28480	0535-0042
10	0515-1717	1	4	SCREW-MACH M2.5 X 0.45 6MM-LG PAN-HD	28480	0515-0894
11	5001-5840	5	1	SPRING-GROUNDING	28480	5001-5840

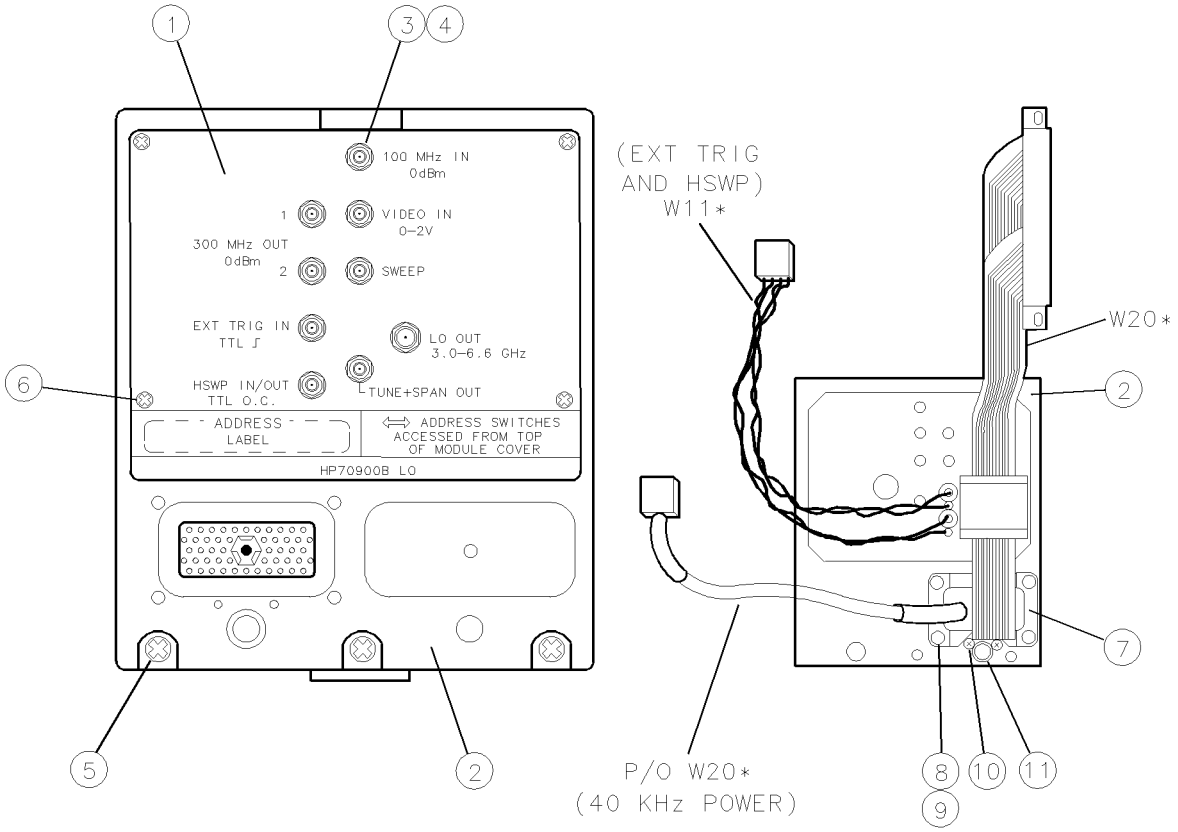

* Refer to Replaceable Parts List for part numbers

Figure 10-4. Overall Parts Identification Drawing, Rear View (Rear-Frame)

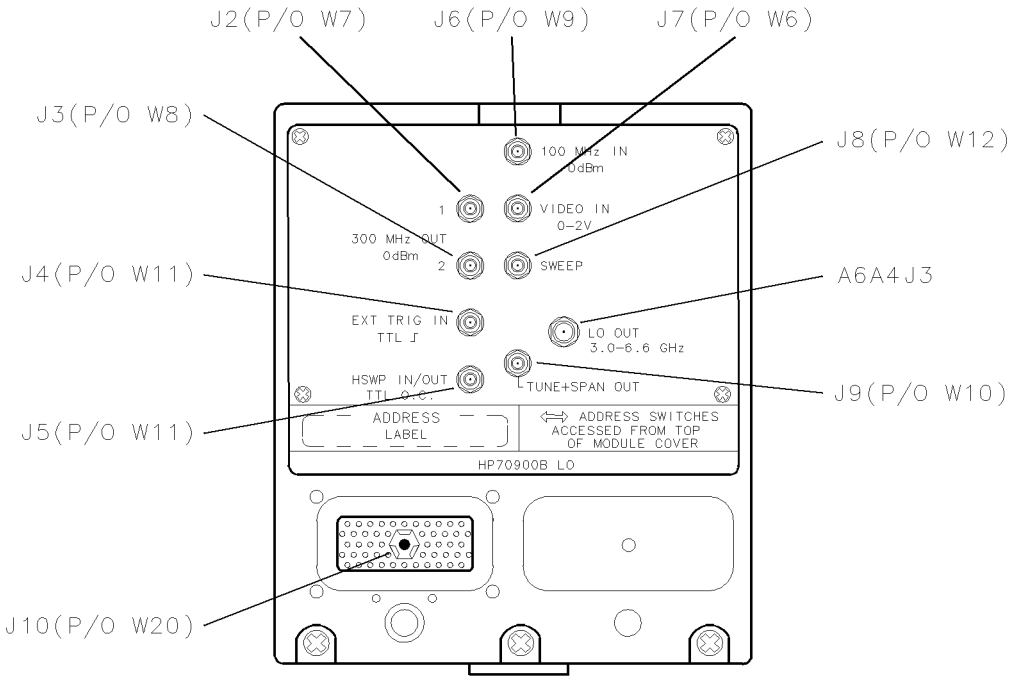

Figure 10-5. Overall Parts Identification Drawing, Rear Panel Connectors

Top View Identification

Overall Parts Identification Drawing, Top View

Item	HP Part Number	C D	Qty	Description	Mfr Code	Mfr Part Number
1	70900-00006	8	1	COVER, MODULE	28480	70900-00006
2	0515-0890	9	4	SCREW-MACH M3 X 0.5 6MM-LG 90-DEG-FLH-HD	28480	0515-0890
3	0380-1708	3	1	SPACER-RVT-ON 24-MM-LG 3.8-MM-ID 6-MM-OD	28480	0380-1708
4	0515-1323	5	2	SCREW-MACH M3 X 0.5 30MM-LG PAN-HD	28480	0515-1323
5	0515-0911	5	1	SCREW-MACH M3 X 0.5 12MM-LG PAN-HD	28480	0515-0911
6	70900-20095	7	1	SUPPORT BRACKET	28480	70900-20095
7	0380-1905	2	1	SPACER-RND 16-MM-LG 3.4-MM-ID 6.4-MM-OD	28480	0380-1905
8	3050-0891	7	1	WASHER-FL MTLC 3.0MM 3.3-MM-ID	28480	3050-0891
9	0515-1825	2	1	SCREW-MACHINE ASSEMBLY M3 X 0.5 23MM-LG	28480	0515-1825
10	0380-1707	2	1	SPACER-RND-20MM-LG PLST	28480	0308-1707
11	0515-0886	3	4	SCREW-MACH M3 X 0.5 6MM-LG PAN-HD	28480	0515-0886

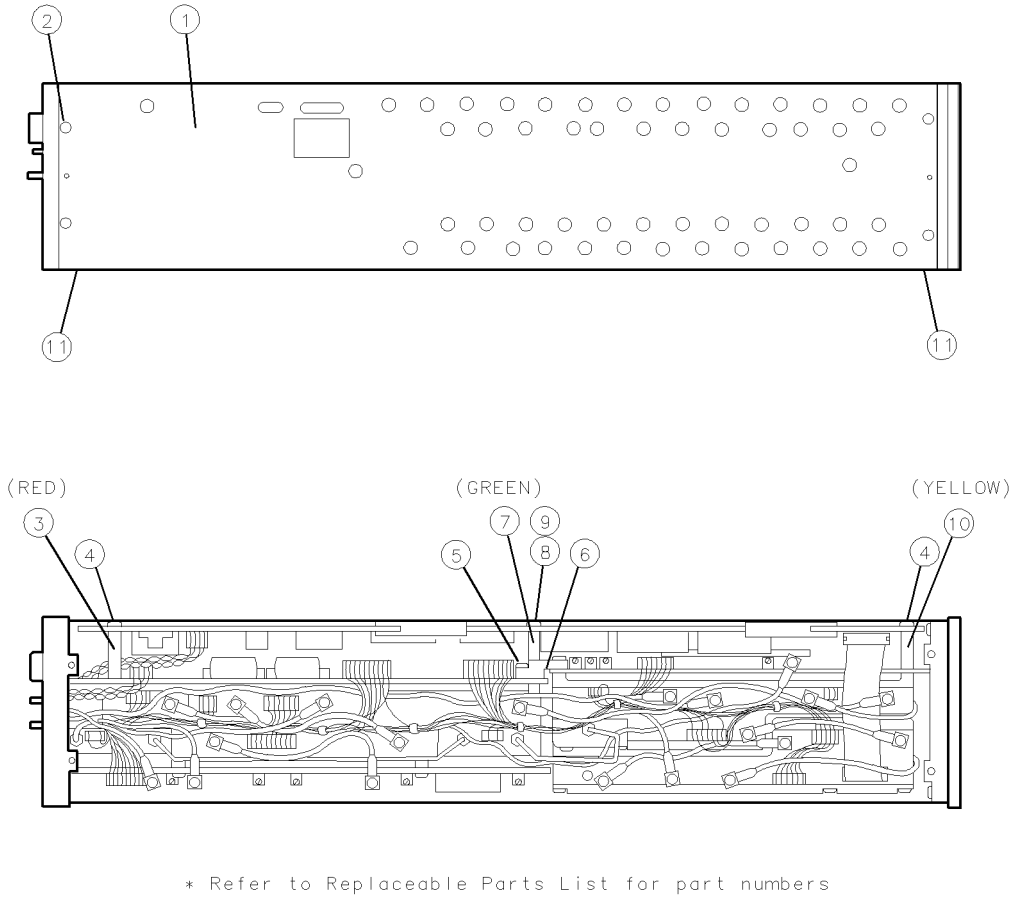

Figure 10-6. Overall Parts Identification Drawing, Top View

Major Assemblies

A1A1 host/processor ..... Figure 10-7, Figure 10-3
A1A2 1/4 MB RAM/ROM ..... Figure 10-7
A2 video processor ..... Figure 10-7, Figure 10-3
A3 power supply ..... Figure 10-7
A4A1 300 MHz amplifier ..... Figure 10-7, Figure 10-3
A4A2 idler lock ..... Figure 10-7
A4A3 idler VCO microcircuit ..... Figure 10-7
A6A1 100 MHz reference ..... Figure 10-7
A6A2 YTO lock ..... Figure 10-7
A6A3 idler buffer ..... Figure 10-7
A6A4 YTO lock microcircuit ..... Figure 10-7
A6A5 YTO ..... Figure 10-7
A7 FRAC'N synthesizer ..... Figure 10-7, Figure 10-3
A7A1 FFS phase lock loop ..... Figure 10-7, Figure 10-3
A7A2 FFS analog ..... Figure 10-7, Figure 10-3
A8 frequency control ..... Figure 10-7, Figure 10-12
A9 front panel ..... Figure 10-7, Figure 10-2
A10 motherboard ..... Figure 10-12, Figure 10-3
A11 wiring harness ..... Figure 10-7

Top View Identification

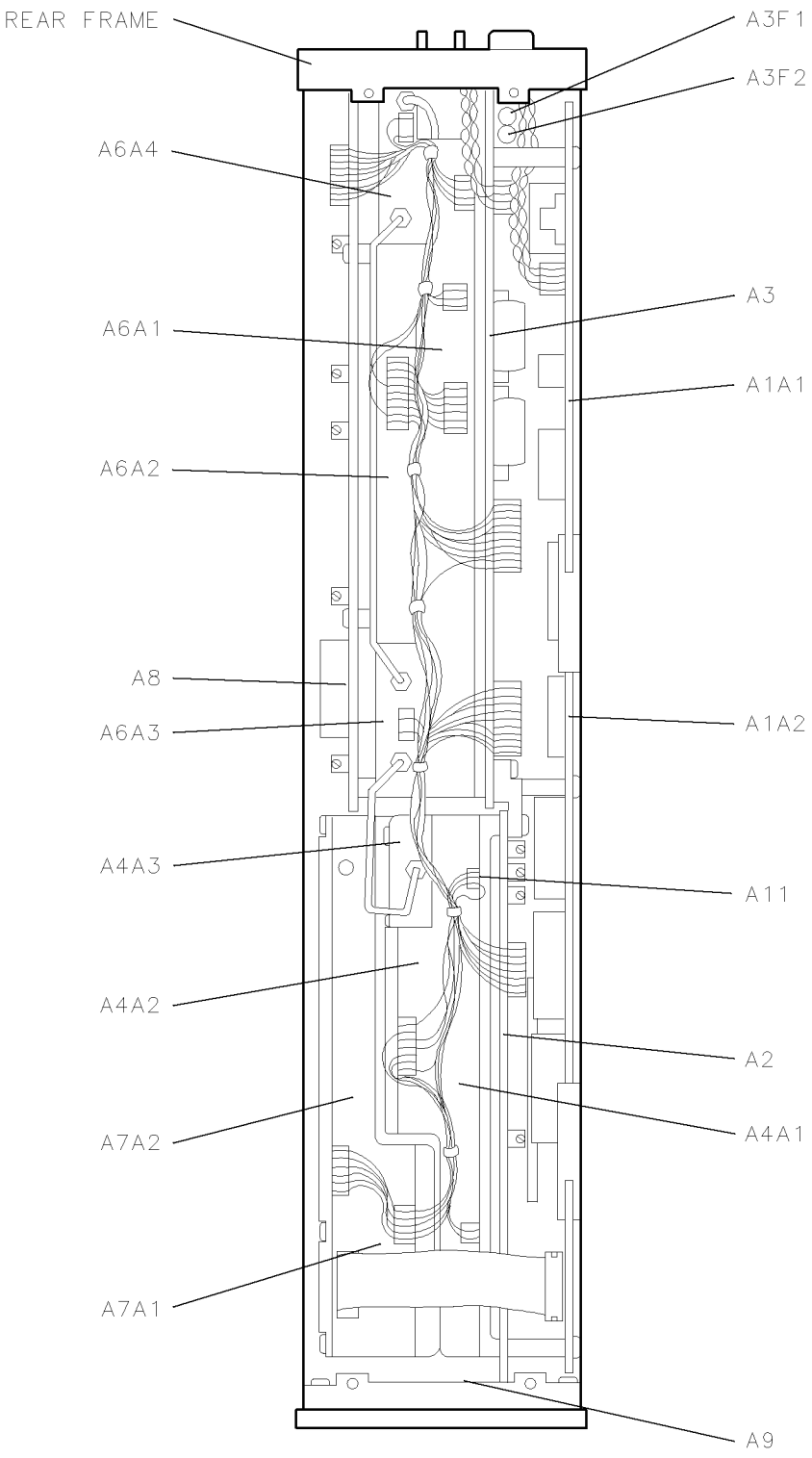

Figure 10-7. Overall Parts Identification Drawing, Top View (Assembly Locations)

Major Cables

Cables	Refer to Figure.
A6W1	Figure 10-8
A6W2	Figure 9-11
A6W3	Figure 9-11
A6W16	Figure 9-11
A6W18	Figure 9-11
A7W1	Figure 10-3
A7W2	Figure 10-3
A7W3	Figure 10-3
A7W4	Figure 10-8, Figure 10-3
A7W5	Figure 10-8
W1	Figure 10-8
W2	Figure 10-8
W3	Figure 10-8
W4	Figure 10-8
W6	Figure 10-8
W7	Figure 10-8
W8	Figure 10-8
W9	Figure 10-8
W10	Figure 10-8
W11	Figure 10-8
W12	Figure 10-8
W13	Figure 10-8, Figure 10-3
W14	Figure 10-8
W15	Figure 10-12
W16	Figure 10-12
W17	Figure 10-8
W18	Figure 10-8
W19	Figure 10-8
W20	Figure 10-8

Top View Identification

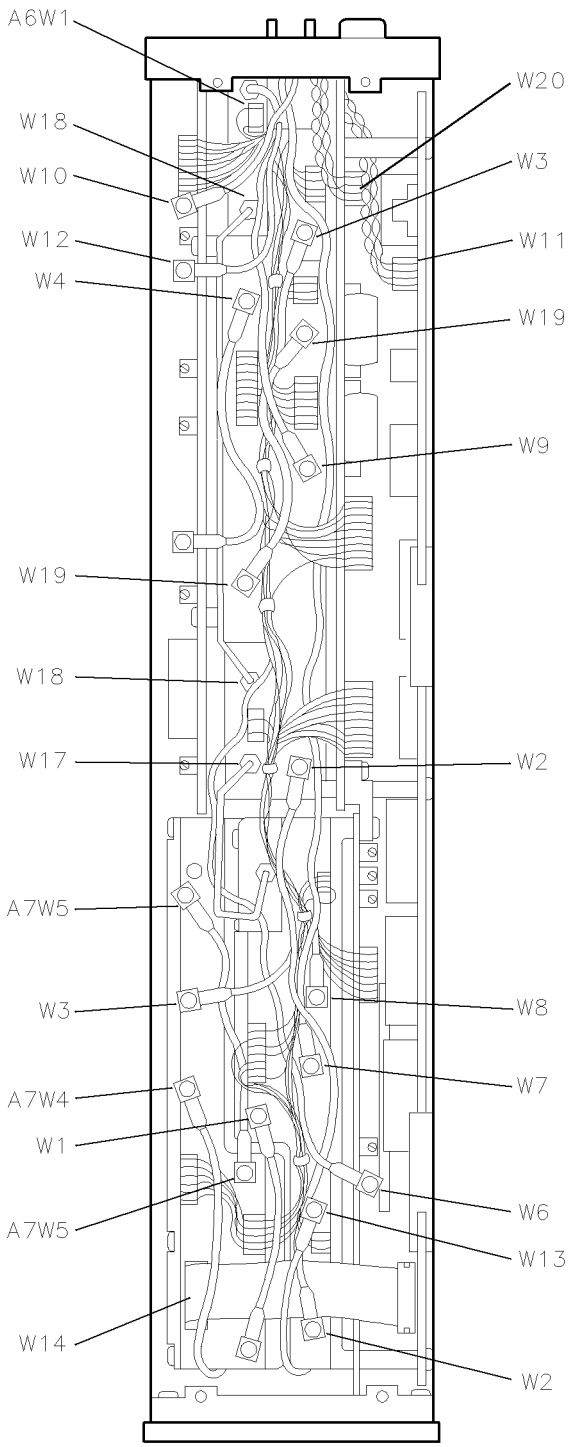

Figure 10-8. Overall Parts Identification Drawing, Top View (Cable Locations)

Major Connectors

Connectors	Refer to Figure.
A1A1J1	Figure 10-9
A1A1J5	Figure 10-9
A2J1	Figure 10-9
A2J3	Figure 10-9
A3J1	Figure 10-9
A3J2	Figure 10-9
A3J3	Figure 10-9
A4A1J1	Figure 10-9
A4A1J2	Figure 10-9
A4A1J3	Figure 10-9
A4A1J4	Figure 10-9
A4A1J5	Figure 10-9
A4A1J6	Figure 10-9
A4A2J1	Figure 10-9
A4A2J2	Figure 10-9
A4A3J2	Figure 10-9
A6A1J1	Figure 10-9
A6A1J2	Figure 10-9
A6A1J3	Figure 10-9
A6A1J4	Figure 10-9
A6A1J5	Figure 10-9
A6A1J6	Figure 10-9
A6A1J7	Figure 10-9
A6A2J1	Figure 9-11
A6A2J2	Figure 9-11
A6A2J4	Figure 10-9
A6A2J5	Figure 10-9
A6A2J6	Figure 10-9
A6A3J1	Figure 10-9
A6A3J2	Figure 10-9
A6A3J3	Figure 10-9
A6A4J1	Figure 10-9
A6A4J2	Figure 10-9
A6A4J3	Figure 10-5
A6AT1J1	Figure 10-7
A6AT1J2	Figure 10-7
A7A1J1	Figure 10-9
A7A1J2	Figure 10-9
A7A1J3	Figure 10-9
A7A1J4	Figure 10-3
A7A1J5	Figure 10-3
A7A1J6	Figure 10-3
A7A1J7	Figure 10-3
A7A2J1	Figure 10-9
A7A2J2	Figure 10-9
A7A2J3	Figure 10-9
A7A2J4	Figure 10-9
A7A2J5	Figure 10-9
A7A2J6	Figure 10-3
A7A2J7	Figure 10-3
A7A2J8	Figure 10-3
A8J1	Figure 10-9

Top View Identification

A8J2 ..... Figure 10-9
A8J3 ..... Figure 10-9
A8J7 ..... Figure 10-9
J1 ..... Figure 10-2
J2 ..... Figure 10-5
J3 ..... Figure 10-5
J4 ..... Figure 10-5
J5 ..... Figure 10-5
J6 ..... Figure 10-5
J7 ..... Figure 10-5
J8 ..... Figure 10-5
J9 ..... Figure 10-5
J10 ..... Figure 10-5

Refer to Figure 10-9 for the following connectors.

Connectors	Item Number
A1A1J1	28
A1A1J5	43
A2J1	40
A2J3	37
A3J1	34
A3J2	33
A3J3	26
A4A1J1	44
A4A1J2	42
A4A1J3	41
A4A1J4	39
A4A1J5	38
A4A1J6	36
A4A2J1	8
A4A2J2	6
A4A3J2	11
A6A1J1	35
A6A1J2	32
A6A1J3	31
A6A1J4	30
A6A1J5	29
A6A1J6	27
A6A1J7	25
A6A2J1, J2	Figure 9-11
A6A2J4	15
A6A2J5	17
A6A2J6	18
A6A3J1	12
A6A3J2	13
A6A3J3	14
A6A4J1	22
A6A4J2	23
A6A4J3	Figure 10-5
A6AT1J1, J2	Figure 10-7
A7A1J1	1
A7A1J2	3
A7A1J3	4
A7A1J4, J5, J6, and, J7	Figure 10-3
A7A2J1	10
A7A2J2	9
A7A2J3	7
A7A2J4	5
A7A2J5	2
A8J1	16
A8J2	19
A8J3	20
A8J7	21

Top View Identification

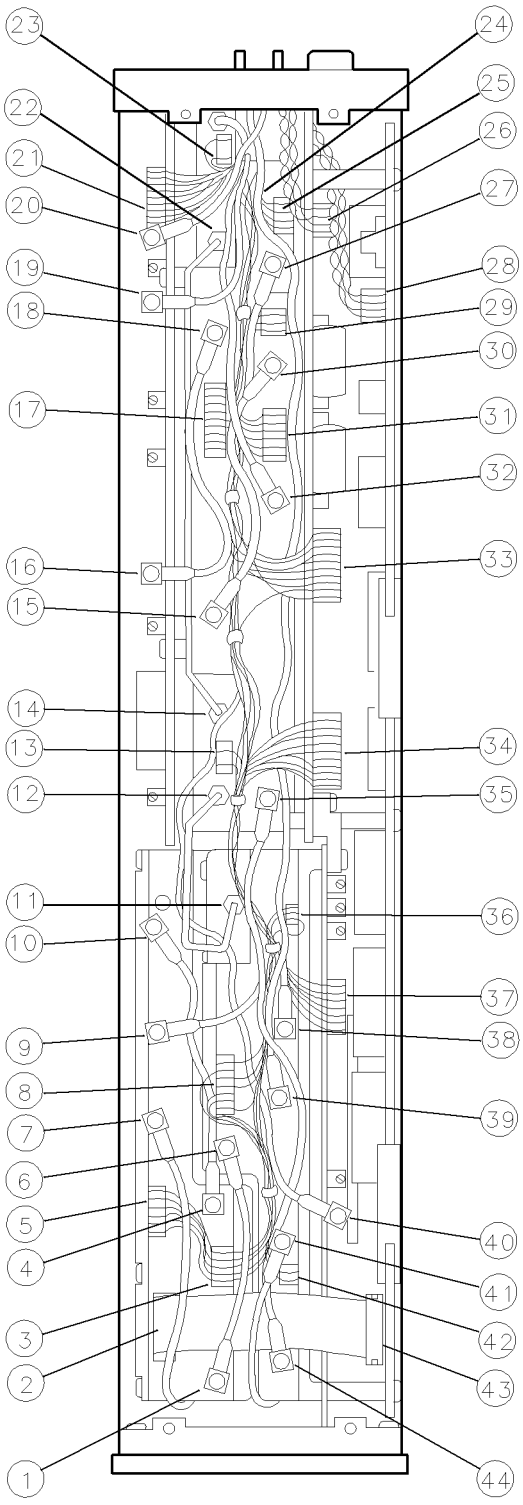

Figure 10-9. Overall Parts Identification Drawing, Top View (Connector Locations)

Bottom View Identification

Overall Parts Identification Drawing, Bottom View

Item	HP Part Number	C D	Qty	Description	Mfr Code	Mfr Part Number
1	70900-20096	8	1	FRAME, BOTTOM	28480	70900-20096
2	0515-1498	5	2	SCREW-SKT-HD-CAP M4 X 0.7 8MM-LG	28480	0515-1498
3	0515-0885	7	10	SCREW-MACH M4 X 0.7 6MM-LG PAN-HD	28480	0515-0885
4	0515-0886	3	9	SCREW-MACH M3 X 0.5 6MM-LG PAN-HD	28480	0515-0886

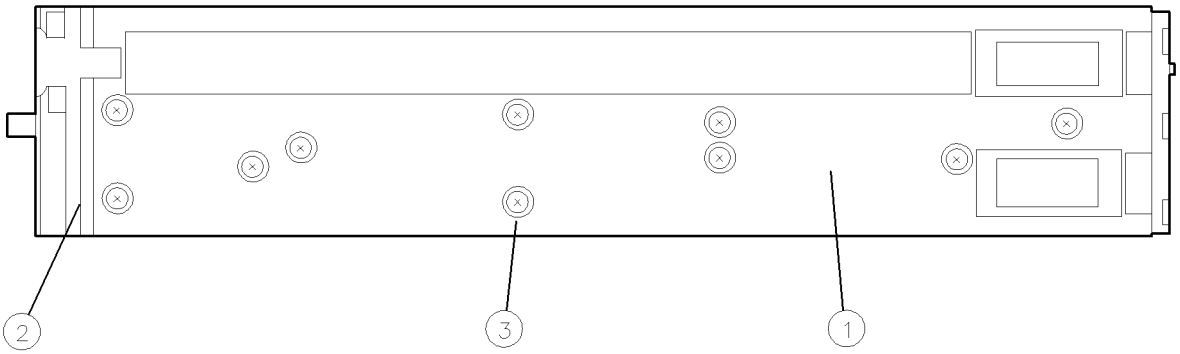

BOTTOM FRAME, BOTTOM VIEW

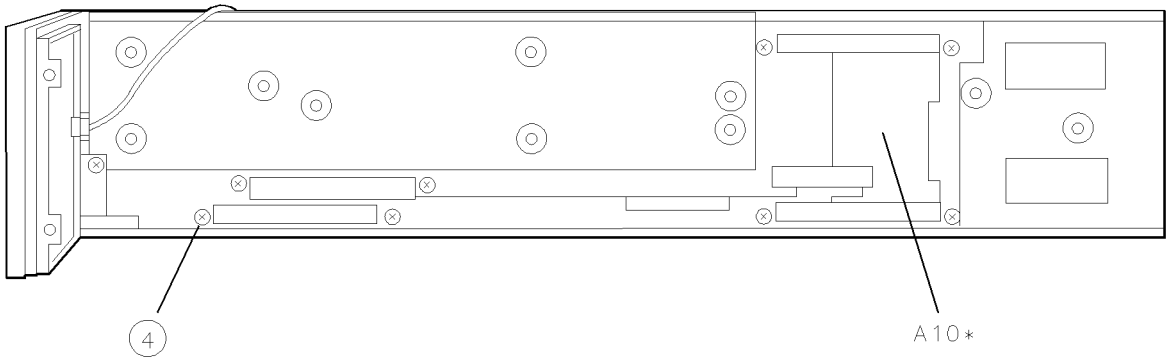

BOTTOM FRAME, TOP VIEW

* Refer to Replaceable Parts List for part numbers

Figure 10-10. Overall Parts Identification Drawing, Bottom View

Side View Identification

Overall Parts Identification Drawing, Side View

Item	HP Part Number	CD	Qty	Description	Mfr Code	Mfr Part Number
1	0515-0886	3	2	SCREW-MACH M3 X 0.5 6MM-LG PAN-HD	28480	0515-0886
2	0515-0866	9	1	SCREW-MACH M3 X 0.5 8MM-LG PAN-HD	28480	0515-0866
3	0515-1498	5	2	SCREW-SKT-HD-CAP M4 X 0.7 8MM-LG	28480	0515-1498
4	70900-20095	7	1	SUPPORT BRACKET	28480	70900-20095
5	0515-0911	5	2	SCREW-MACH M3 X 0.5 12MM-LG PAN-HD	28480	0515-0911
6	0515-1111	9	1	SCREW-MACH M3 X 0.5 16MM-LG PAN-HD	28480	0515-1111

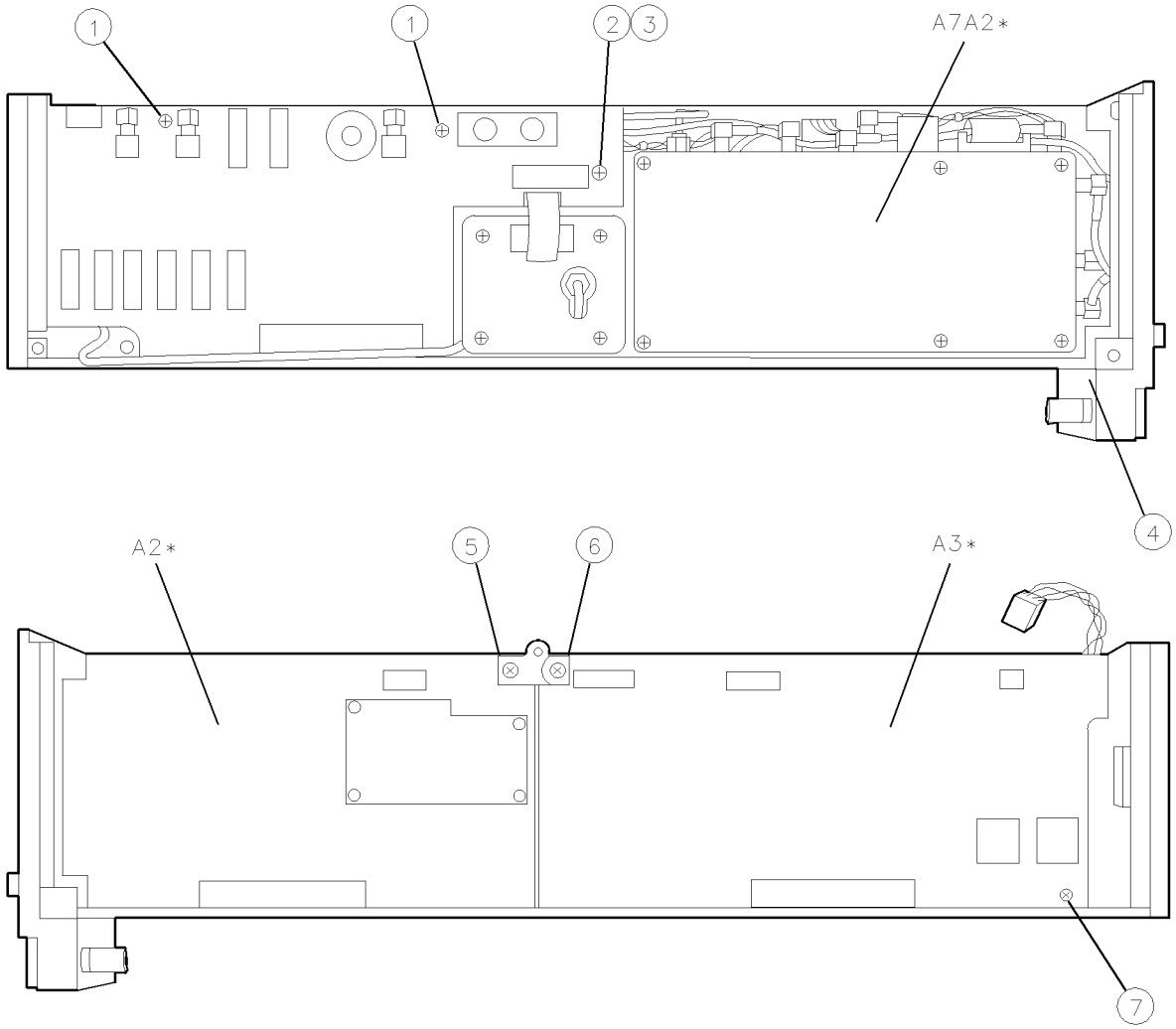

Figure 10-11. Overall Parts Identification Drawing, Side View

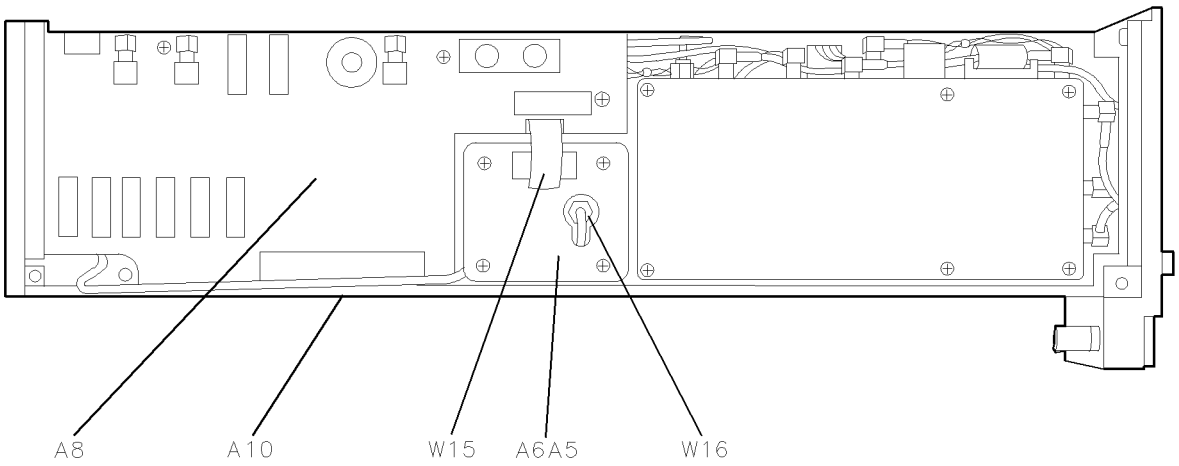

Figure 10-12. Overall Parts Identification Drawing, Left-Side View

Side View Identification (A4 Idler Phase-Lock Loop)

Overall Parts Identification Drawing, Side View (A4 Idler Phase-Lock Loop)

Item	HP Part Number	C D	Qty	Description	Mfr Code	Mfr Part Number
1	70900-20029	7	1	HSG-300 MHZ-IDLER	28480	70900-20029
2	70900-20033	3	1	COV-IDLER DRVR-PC	28480	70900-20033
3	70900-20028	6	1	COVER-300 MHZ	28480	70900-20028
4	0515-0897	6	10	SCREW-MACH M3 X 0.5 8MM-LG PAN-HD	28480	0515-0897
5	0515-1112	0	2	SCREW-MACH M3 X 0.5 20MM-LG PAN-HD	28480	0515-1112
6	0515-0886	3	1	SCREW-MACH M3 X 0.5 6MM-LG PAN-HD	28480	0515-0886
7	8160-0494	4	5	RFI GSKT SURROUNDING JACK	28480	8160-0494
8	8160-0490	0	1	RFI STRIP GSKT 1.07MM X 1.6MM	28480	8160-0490
9	8160-0495	5	1	RFI STRIP GSKT 2.54MM X 1.57MM	28480	8160-0495
10	70900-00013	7	1	DC INSULATOR	28480	70900-00013

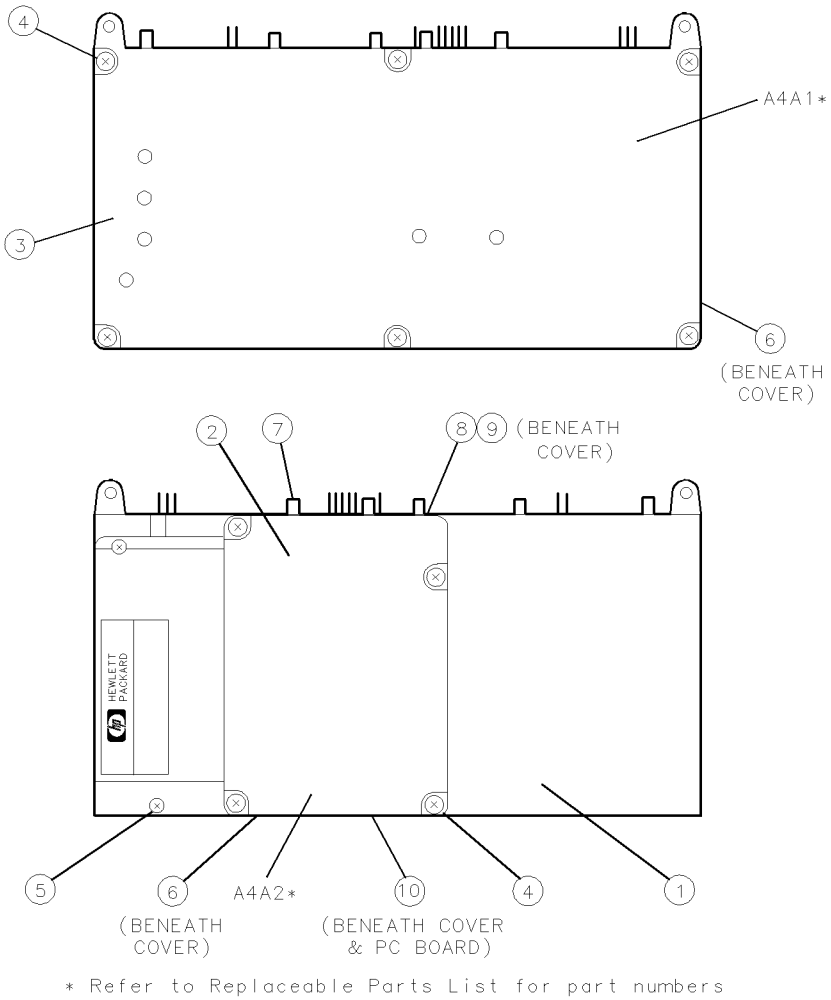

Figure 10-13. Overall Parts Identification Drawing, Side View (A4 Idler Phase-Lock Loop)

Side View Identification (A6 YTO Phase-Lock Loop)

Overall Parts Identification Drawing, Side View (A6 YTO Phase-Lock Loop)

Item	HP Part Number	C D	Qty	Description	Mfr Code	Mfr Part Number
1	70900-20026	4	1	COVER A6A1 ASSEMBLY	28480	70900-20026
2	8160-0495	5	1	RFI “D” STRIP CNDCT-ELSTMR 2.54-MM-WD	28480	8160-0495
3	8160-0494	4	5	RFI “D” STRIP CNDCT-ELSTMR 7.92-MM-WD	28480	8160-0494
4	0515-0897	7	7	SCREW-MACH M3 X 0.5 8MM-LG PAN-HD	28480	0515-0897
5	70900-00007	9	1	INSULATOR 87 X 162MM	28480	70900-00007
6	0515-1279	0	2	SCREW-MACH M2.5 X 0.45 16MM-LG PAN-HD	28480	0515-0894
7	0515-1012	9	4	SCREW-MACH M4 X 0.7 8MM-LG 90-DEG-FLH-HD	28480	0515-1367
8	70900-20098	0	2	WASHER INSL 90DEG-M4	28480	70900-20098
9	0515-0897	7	3	SCREW-MACH M3 X 0.5 8MM-LG PAN-HD	28480	0515-0897
10	0515-0866	9	1	SCREW-MACH M3 X 0.5 8MM-LG PAN-HD	28480	0515-0866
11	70900-20025	3	1	COVER A6A2 ASSEMBLY	28480	70900-20025
12	0340-1130	1	1	INSULATION-RBR-SIL 4.76-MM-THK 10-MM-WD	28480	0340-1130
13	70900-20101	6	1	YTO PLL HOUSING	28480	70900-20101
14	2360-0330	5	4	SCREW-MACH 6-32 .32-IN-LG 100 DEG	28480	2360-0333
15	7100-1309	5	1	CAN-SQ H875-IN-DP-OUT 2.234-IN-WD-OUT	28480	7100-1309
16	70900-00011	5	1	INSULATOR-MYL 54.5MM SQ	28480	70900-00011
17	7100-1308	4	1	COVER-SQ .25-IN-DP-OUT 2.183-IN-WD-OUT	28480	7100-1308
18	0515-0894	3	9	SCREW-MACH M2.5 X 0.45 6MM-LG PAN-HD	28480	0515-0894
19	8160-0490	0	1	RFI STRIP GSKT 1.07MM X 1.6MM	28480	8160-0490
20	8160-0491	1	1	RFI STRIP GSKT 1.57MM X 3.18MM X 2.36MM	28480	8160-0490
21	8160-0493	1	1	RFI STRIP GSKT 1.07MM X 1.6MM X 1.78MM	28480	8160-0495
22	0515-0911	5	1	SCREW-MACH M3 X 0.512MM-LG PAN-HD	24840	0515-0911
23	0515-1782	0	2	SCREW-MACH M3 X 0.518MM-LG PAN-HD	28480	0515-1782

Side View Identification (A6 YTO Phase-Lock Loop)

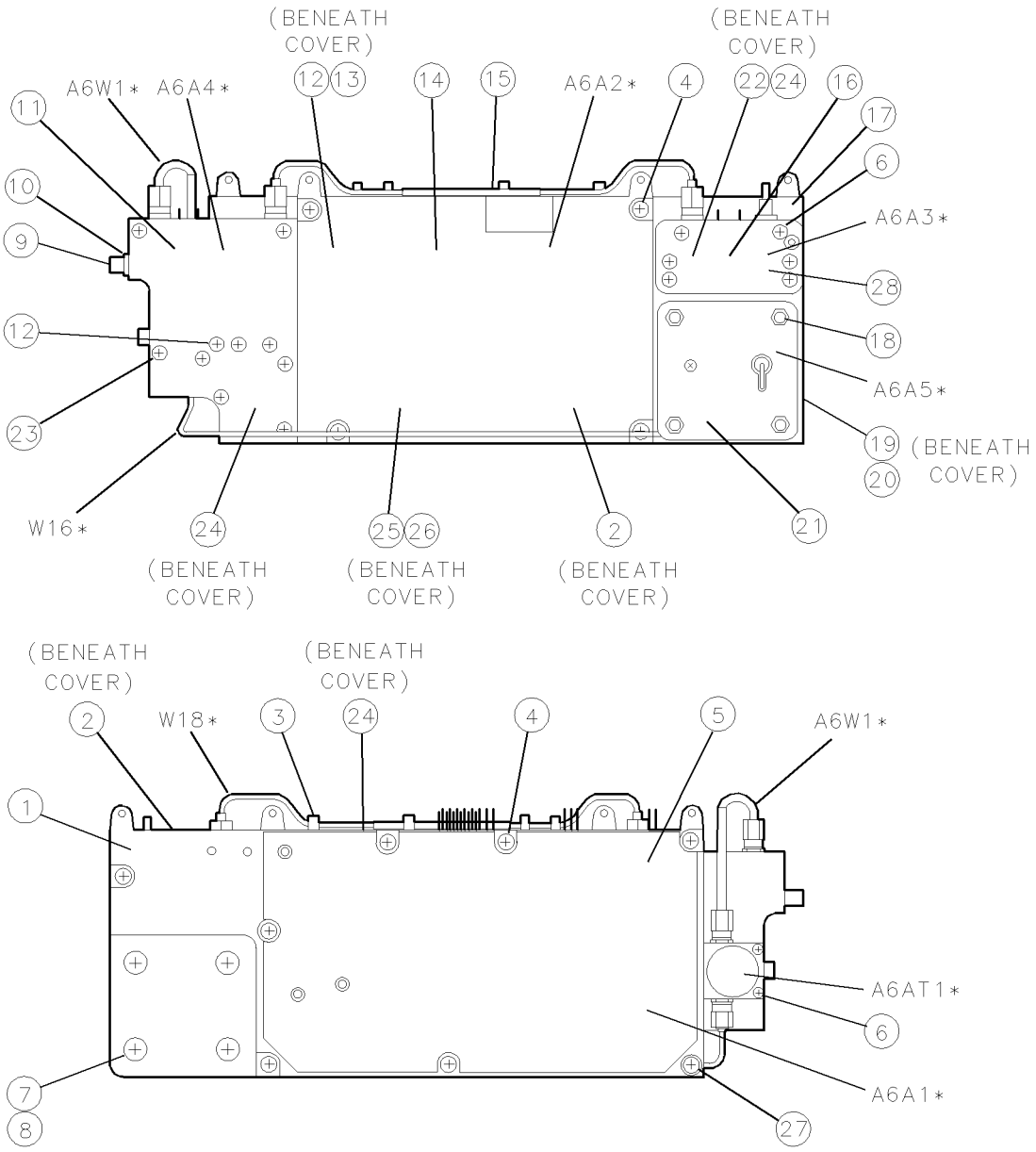

Figure 10-7. Overall Parts Identification Drawing, Side View (A6 YTO Phase-Lock Loop)

Side View Identification (A7 FRAC'N Synthesizer)

Overall Parts Identification Drawing, Side View (A7 FRAC'N Synthesizer)

Item	HP Part Number	C D	Qty	Description	Mfr Code	Mfr Part Number
1	70900-20024	2	1	HOUSING-FFS	28480	70900-20024
2	70900-20023	1	1	COVER-FFS-VCO	28480	70900-20023
3	70900-20022	0	1	COVER-FFS-ANALOG	28480	70900-20022
4	0515-1079	7	4	SCREW-MACH M3 X 0.5 8MM-LG PAN-HD	28480	0515-0897
5	0515-0866	9	2	SCREW-MACH M3 X 0.5 8MM-LG PAN-HD	28480	0515-0866
6	0515-0169	5	6	SCREW-MACH M3 X 0.5 10MM-LG PAN-HD	28480	0515-0169
7	8160-0494	4	6	RFI GSKT SURROUNDING JACK	28480	8160-0494
8	8160-0490	0	1	RFI STRIP GSKT 1.07MM X 1.6MM	28480	8160-0490
9	8160-0495	5	1	RFI STRIP GSKT 2.54MM X 1.57MM	28480	8160-0495

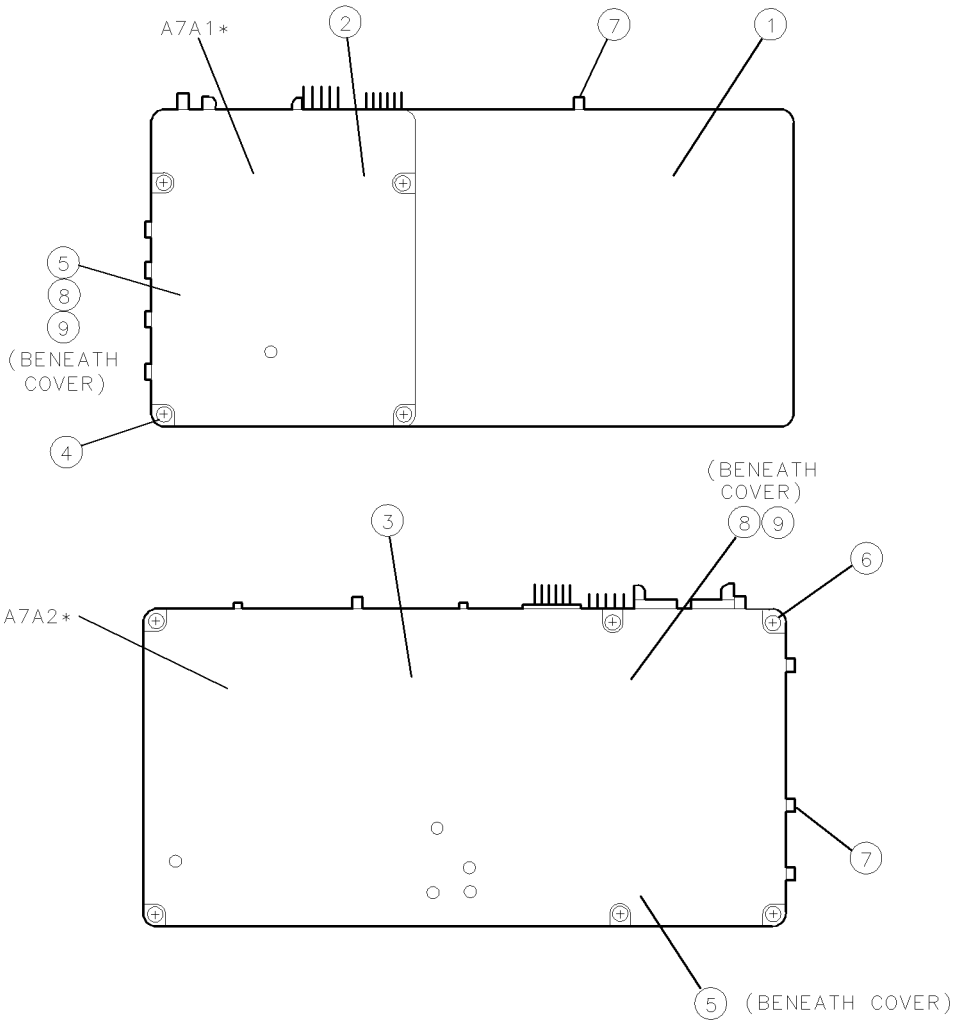

* Refer to Replaceable Parts List for part numbers

Figure 10-8. Overall Parts Identification Drawing, Side View (A7 FRAC'N Synthesizer)

Index

1

100 MHz reference generation, 8-2

3

300 MHz up-converter assembly, 5-5

A

A1A1 host/processor, 9-3
A1A1 host/processor and A1A2 1/4 MB RAM/ROM troubleshooting, 4-20
A1A2 1/4 MB RAM/ROM, 9-5
A2 video processor, 9-6
A3 power supply, 9-7
A3 power supply troubleshooting, 4-23
A4A1 300 MHz amplifier, 9-11
A4A1 300 MHz amplifier troubleshooting, 4-26
A4A2 idler lock, 9-13
A4A2 idler lock troubleshooting, 4-27
A4 idler phase-lock loop, 9-9
A4 idler phase-lock loop troubleshooting, 4-25
A6A1 100 MHz reference, 9-18
A6A1 100 MHz reference troubleshooting, 4-34
A6A2 YTO lock, 9-20
A6A3 idler buffer, 9-22
A6A4 YTO lock microcircuit, 9-23
A6A5 YTO, 9-25
A6 YTO phase-lock loop, 9-15
A6 YTO phase-lock loop/A8 frequency control troubleshooting, 4-31
A7A1 FFS phase lock loop, 9-29
A7A1 FFS phase lock loop, old, 9-33
A7A2 FFS analog, old, 9-35
A7 FRAC'N synthesizer, 9-27
A7 FRAC'N synthesizer, old, 9-31
A7 FRAC'N synthesizer troubleshooting, 4-37
A8 frequency control, 9-37
A9 front panel, 9-38
adjustable components, 6-2
adjustment
  definition, 6-1
  tools, 6-3
Adjustment 01. Video Processor, 6-8
Adjustment 02. 100 MHz Reference/300 MHz Bandpass Filter, 6-11
Adjustment 03. 300 MHz Bandpass Filter, 6-15
Adjustment 04. Calibrator Output Frequency, 6-18
Adjustment 05. Calibrator Output Amplitude, 6-19
Adjustment 06. 300 MHz Reference Output Amplitude, 6-20
Adjustment 07. FFS VCO, 6-22
Adjustment 08. FFS Tune/Comp Coarse, 6-24
Adjustment 09. FFS Reference Null, 6-26
Adjustment 10. FFS API 1, 6-28
Adjustment 11. FFS API 2, 6-30
Adjustment 12. FFS API 3, 6-31
Adjustment 13. FFS Tune/Comp Fine, 6-32
Adjustment 14. FFS Spurious Responses, 6-34
Adjustment 15. Low Idler, 6-36
Adjustment 16. Sweep Offset, 6-38
Adjustment 17. Frequency Control Voltage References, 6-40
Adjustment 18. YTO Frequency Endpoints, 6-42
Adjustment 19. FM Gain, 6-45
Adjustment 20. Sweep Overshoot, 6-47
Adjustment 21. Tune + Span Offset, 6-49
Adjustment 22. Idler Buffer, 6-51
alternate key labels, 2-2
any errors from the analyzer test?, 4-5
are the A9 front panel indicators OK?, 4-6
assumptions made, 2-5

B

before you begin, 6-2
blown fuse troubleshooting, 4-23
bottom view identification, 10-15

C

calibration data edit, 2-15
can the symptom be observed on
  idler output?, 4-5
  LO output?, 4-5
  rear-panel 300 MHz output?, 4-5

command screen menus, 2-9
common
  connections, 7-3
  required equipment, 7-3
component specifications, 5-5
computer compatibility, 2-2
computer language compatibility, 2-2
configuring
  the hardware, 2-4
conversion loss verification, 5-7
cursor keys and menu selections, 2-10

D

deciding which adjustment procedure to use, 6-2
default HP-MSIB address map, 3-3
definition
  adjustment, 6-1
  final tests, 2-7
  module verification tests, 1-2
  operation verification tests, 1-2
  procedure, 6-1
  single tests, 2-8
  system performance tests, 1-2
  test, 6-1
does the module complete power-up?, 4-4

E

edit and command screen menus, 2-9
edit calibration data, 2-15
  command screen, 2-16
  edit screen, 2-16
edit screen
  menus, 2-9
  parameter menu, 2-12
electrostatic discharge (ESD), 4-2
equipment menu, 2-13
  command screen, 2-14
  edit screen, 2-14
  softkeys, 2-21
error and status messages, 2-23
error messages, 2-7, 2-23
Error Messages
  Aborted, 2-23
  Address is HP-IB controller address., 2-24
  Address matches system disk drive, 2-23
  Address not in acceptable range., 2-23
  Attempt to close file ____ failed., 2-24
  Attempt to create file ____ failed., 2-24
  Attempt to Edit Mass Storage failed., 2-24
  Attempt to store Mass Storage failed., 2-24
  Bad instrument address in equipment list. Address matches controller., 2-24
  Calibration data file not found for ____ with serial number ____., 2-25
Calibration data for ____ is blank for some frequencies listed., 2-25
Calibration data for ____ is greater than maximum range of ____., 2-25
Calibration data for ____ is less than minimum range of ____., 2-25
Calibration data frequency exceed acceptable limits. , 2-24
Calibration data frequency is greater than maximum range of ____.', 2-25
Calibration data frequency is less than minimum range of ____. , 2-24
Duplicate Address, 2-29
Duplicate HP-IB address., 2-23
Duplication may exclude specific tests., 2-29
DUT does not have an address., 2-25
DUT was not at address in the equipment list. DUT was expected at address ____., 2-25
DUT was not found at address in equipment list.', 2-25
EEPROM for ____ is defective., 2-23
Equipment address matches external disk drive., 2-25
Equipment does not have an address., 2-25
Equipment list is not acceptable., 2-23
Equipment list shows no analyzer to test., 2-23
Equipment Menu data not found on ____., 2-25
ERROR XXX in XXXXX ____ ., 2-25
Failed, 2-23
File ____ not found while assigning I/O path., 2-26
Hdw Broken, 2-27
Incorrect Volume found. ____ required., 2-26
KEYBOARD SYSTEM CRASH WITH KEYBOARD: ____., 2-27
Logging errors to ERRORLOG failed. Operating Disk is write protected., 2-27
Missing ETE, 2-28
Non-responding HP-IB address, 2-23
Observe date format and character position., 2-27
Parameter Menu data not found on ____., 2-26
Passed, 2-27
Passthru address is incorrect., 2-23
PAUSED. PRE, 2-27
Possib, 2-26
Possible Fix, 2-25, 2-26, 2-27

PRGM ERROR, 2-27
Read ____ data from file ____ failed., 2-26
Reading errors from ERRORLOG failed. Check disk at ____., 2-27
Return to Equipment Menu to enter serial number for ____., 2-28
Search for ____ unsuccessful., 2-24
Selected instrument under test is ____; but the software supports the ____., 2-26
Sensor model # ____ not supported., 2-26
Setup Error, 2-28
Some devices listed as Available require serial numbers., 2-24
Some Model #'s are not supported., 2-23
SORRY, but your SERIAL NUMBER must end in a NUMERIC., 2-28
String is too long. It has been truncated., 2-29
Test can not be done., 2-28
TEST_LIST is not compatible., 2-28
Test Parameter data file not found on ____., 2-26
The ____ at address ____ was not found on HP-IB., 2-28
The controller does not have sufficient memory., 2-28
The DUT must have an HP-IB address., 2-28
The HP 436A is in lowest range, waiting 10 seconds., 2-28
The HP 8902A needs repair (Error 6)., 2-28
The ____ is listed as the DUT in the Equipme, 2-26
The Operating Disk is write protected., 2-26
THIS COLUMN CAN NOT BE EDITED., 2-28
THIS IS ____ AND FOUND DUPLICATE FILES: ____., 2-28
This test can not be selected because of missing ETE., 2-28
Timed Out, 2-28
Too many Cal Data frequencies were eliminated. There must be at least two frequencies., 2-27
Undefined function or subprogram, 2-23
Volume was not located., 2-27
Write ____ data to file ____ failed., 2-27
Write protected., 2-29
Wrong device at specified address. DUT was expected at address ____., 2-27
error messages or warnings defined, 2-7
ESD (electrostatic discharge), 4-2, 4-3
extender cable installation, 6-2
external frequency reference, 6-3, 8-2

F

FFS unlock, 4-37
final tests, 2-7, 7-2
fractional frequency synthesizer adjustments, 6-6
frequency control adjustments, 6-7
frequency error, 4-25
front-panel self-test LED troubleshooting, 4-20
front view identification, 10-2

H

hardware, configuring the, 2-4
HP 8566B spectrum analyzer calibration, 6-3
HP-IB connections, 6-3, 7-3
HP-IB troubleshooting, 4-21
HP-MSIB
  address menu, 2-16
  menu softkeys, 2-21

I

idler assembly adjustment, 6-7
idler unlock, 4-25
if Adjustment 01. Video Processor fails, 4-47
if Adjustment 02. 100 MHz Reference/300 MHz Bandpass Filter fails, 4-47
if Adjustment 03. 300 MHz Bandpass Filter fails, 4-47
if Adjustment 04. Calibrator Output Frequency fails, 4-47
if Adjustment 05. Calibrator Output Amplitude fails, 4-48
if Adjustment 06. 300 MHz Reference Output Amplitude fails, 4-48
if Adjustment 07. FFS VCO fails, 4-48
if Adjustment 08. FFS Tune/Comp Coarse fails, 4-48
if Adjustment 09. FFS Reference Null fails, 4-48
if Adjustment 10. FFS API 1 fails, 4-49
if Adjustment 11. FFS API 2 fails, 4-49
if Adjustment 12. FFS API 3 fails, 4-49
if Adjustment 13. FFS Tune/Comp Fine fails, 4-49
if Adjustment 14. FFS Spurious Responses fails, 4-49
if Adjustment 15. Low Idler fails, 4-50
if Adjustment 16. Sweep Offset fails, 4-50
if Adjustment 17. Frequency Control Voltage References fails, 4-50
if Adjustment 18. YTO Frequency Endpoints fails, 4-50
if Adjustment 19. FM Gain fails, 4-51

if Adjustment 20. Sweep Overshoot fails, 4-51
if Adjustment 21. Tune + Span Offset fails, 4-51
if Adjustment 22. Idler Buffer fails, 4-51
if hardware error messages (7000–7999) occur, 4-8
if operating errors messages (2000–2999) occur, 4-7
if series 8000 error messages (8000–8999) occur, 4-18
if series 9000 error messages (9000–9999) occur, 4-19
if Test 01. 300 MHz Reference Output Power and Harmonics fails, 4-40
if Test 02. LO Output Power and Harmonics fails, 4-40
if Test 03. Residual FM (Span >10 MHz) fails, 4-40
if Test 04. LO Output Spurious Response fails, 4-40
if Test 05. LO Display Sidebands fails, 4-41
if Test 06. LO 40 kHz Sidebands fails, 4-41
if Test 07. Reference Oscillator Accuracy fails, 4-41
if Test 08. Calibrator Amplitude Accuracy fails, 4-41
if Test 09. 300 MHz Reference Amplitude Accuracy fails, 4-42
if Test 10. Video Detector Tracking fails, 4-42
if Test 11. External Triggering fails, 4-42
if Test 12. Video Processor Noise fails, 4-42
if Test 13. LO Frequency and Span Accuracy (Span >10 MHz) fails, 4-42
if Test 14. LO Span Accuracy (Phase-Locked Spans) fails, 4-43
if Test 15. LO Frequency Accuracy (Span ≤10 MHz) fails, 4-43
if Test 16. LO Frequency Error versus Sweep Time fails, 4-43
if Test 17. Tune + Span Output Accuracy fails, 4-43
if Test 18. SWP Output Accuracy fails, 4-43
if Test 19. HSWP Output Voltage fails, 4-43
if Test 20. Line Triggering fails, 4-44
if Test 21. LED Check fails, 4-44
if Test 22. Video Bandwidth fails, 4-44
if Test 23. 300 MHz Reference 40 kHz Sidebands fails, 4-44
if Test 24. Calibrator Harmonics fails, 4-44
if Test 25. Calibrator Output Impedance fails, 4-45
if Test 26. 300 MHz Reference Isolation fails, 4-45
if Test 27. External Reference fails, 4-45
if Test 28. Reference Oscillator Noise and Stability fails, 4-45
if Test 29. YTO Linearity fails, 4-46
if you have adjustment procedure failures, 4-47
if you have verification test failures, 4-40
installing module verification software, 2-5
is the A2 video processor OK?, 4-5

L

loaded-down power supply troubleshooting, 4-24

M

main menu, 2-11
  softkeys, 2-11, 2-19
  structure, 2-9, 2-11
major assemblies, 10-7
major cables, 10-9
major connectors, 10-11
Manual 1, viii
Manual 2, viii
manual organization, viii
mass storage menu, 2-11
  command screen, 2-12
  edit screen, 2-12
  softkeys, 2-20
menu
  equipment, 2-13
  HP-MSIB address, 2-16
  mass storage, 2-11
  parameter, 2-12
  structure, 2-9
  test, 2-16
menus, 2-9
messages
  error, 2-23
  status, 2-23
minimum RAM requirements, 2-2
module, serial numbers, 1-3
module testing, 2-7
module verification software
  installation, 2-5
  overview, 2-7
  revision, 2-1
module verification tests, 1-2

N

noise floor verification, 5-7
normal/test switch troubleshooting, 4-22

O

operation, system verification tests, 1-2
Option 915, now referred to as Option OB3, vii, 10-1
overall block diagram of local oscillator source, 4-59

P

parameter menu, 2-12
  command screen, 2-13
  edit screen, 2-12
  softkeys, 2-20
PC board connector cleaning, 4-2
performance, system performance tests, 1-2
performing related adjustments and verification tests, 4-53
power-up sequence failures, 4-20
printer compatibility, 2-3
printing test results, 2-8
procedure, definition, 6-1

R

RAM requirements, minimum, 2-2
rear view identification, 10-4
recommended test equipment, 7-3
reference adjustments, 6-6
requirements
  for SRM, 2-2
  minimum RAM, 2-2
revision, module verification software, 2-1

S

serial numbers, module, 1-3
side view identification, 10-16
side view identification (A4 idler phase-lock loop), 10-18
side view identification (A6 YTO phase-lock loop), 10-19
side view identification (A7 FRAC'N synthesizer), 10-21
single tests, 2-8
sniffer loop assembly, 5-9
softkeys
  test menu, 2-22
software
  installing, 2-5
  version, 2-5
specifications, 5-4
spectrum analyzer/RF cable calibration, 8-6
spurious/sideband, 4-35
spurious/sideband/noise, 4-28
spurious signals/noise, 4-38
SRM, using an, 2-2
static-safe work station, 4-2
static-shielding containers, 4-3
status messages, 2-23
system performance tests, 1-2
system verification of operation tests, 1-2

T

Test 01. 300 MHz Reference Output Power and Harmonics, 7-4
Test 02. LO Output Power and Harmonics, 7-5
Test 03. Residual FM (Span >10 MHz), 7-6
Test 04. LO Output Spurious Response, 7-7
Test 05. LO Display Sidebands, 7-9
Test 06. LO 40 kHz Sidebands, 7-11
Test 07. Reference Oscillator Accuracy, 7-13
Test 08. Calibrator Amplitude Accuracy, 7-15
Test 09. 300 MHz Reference Amplitude Accuracy, 7-16
Test 10. Video Detector Tracking, 7-17
Test 11. External Triggering, 7-18
Test 12. Video Processor Noise, 7-19
Test 13. LO Frequency and Span Accuracy (Span >10 MHz), 7-20
Test 14. LO Span Accuracy (Phase-Locked Spans), 7-21
Test 15. LO Frequency Accuracy (Span ≤10 MHz), 7-22
Test 16. LO Frequency Error versus Sweep Time, 7-23
Test 17. Tune + Span Output Accuracy , 7-24
Test 18. SWP Output Accuracy , 7-25
Test 19. HSWP Output Voltage, 7-26
Test 20. Line Triggering, 7-27
Test 21. LED Check, 7-29
Test 22. Video Bandwidth, 7-30
Test 23. 300 MHz Reference 40 kHz Sidebands, 7-31
Test 24. Calibrator Harmonics , 7-33
Test 25. Calibrator Output Impedance, 7-34
Test 26. 300 MHz Reference Isolation, 7-36
Test 27. External Reference, 7-38
Test 28. Reference Oscillator Noise and Stability, 7-40
Test 29. YTO Linearity, 7-41
test definition, 6-1
test equipment construction, 6-2, 7-3
test equipment, tools and calibration, 6-2
testing multiple modules, 2-7
test menu, 2-16
  command screen, 2-17
  softkeys, 2-22
test results, printing, 2-8
tests
  final, 2-7

module verification tests, 1-2
single, 2-8
system performance tests, 1-2
system verification of operation, 1-2
tests requiring an external frequency reference, 8-2
theory of operation, 5-9
theory of operation for the 300 MHz up-converter, 5-4
the state worksheet, 4-57
top view identification, 10-6
to remove the
A1A1 host/processor, 9-3
A1A2 1/4 MB RAM/ROM, 9-5
A2 video processor, 9-6
A3 power supply, 9-7
A4A1 300 MHz amplifier, 9-11
A4A2 idler lock, 9-13
A4 idler phase-lock loop, 9-9
A6A1 100 MHz reference, 9-18
A6A2 YTO lock, 9-20
A6A3 idler buffer, 9-22
A6A4 YTO lock microcircuit, 9-23
A6A5 YTO, 9-25
A6 YTO phase-lock loop, 9-15
A7A1 FFS phase lock loop, 9-29
A7A1 FFS phase lock loop, old, 9-33
A7A2 FFS analog, old, 9-35
A7 FRAC'N synthesizer, 9-27
A7 FRAC'N synthesizer, old, 9-31
A8 frequency control, 9-37
A9 front panel, 9-38
to replace the
A1A1 host/processor, 9-3
A1A2 1/4 MB RAM/ROM, 9-5
A2 video processor, 9-6
A3 power supply, 9-7
A4A1 300 MHz amplifier, 9-11
A4A2 idler lock, 9-13
A4 idler phase-lock loop, 9-9
A6A1 100 MHz reference, 9-18
A6A2 YTO lock, 9-20
A6A3 idler buffer, 9-22
A6A4 YTO lock microcircuit, 9-23
A6A5 YTO, 9-25
A6 YTO phase-lock loop, 9-15
A7A1 FFS phase lock loop, 9-29
A7A1 FFS phase lock loop, old, 9-33
A7A2 FFS analog, old, 9-35
A7 FRAC'N synthesizer, 9-27
A7 FRAC'N synthesizer, old, 9-31
A8 frequency control, 9-37
HP 70900B local oscillator source, 9-38
troubleshooting flow chart, 4-4
types of adjustments, 6-6

U

up-converter performance verification, 5-7

V

verification, of system operation tests, 1-2
verification software, 6-2
verification tests, 7-2
version, software, 2-5
video processor adjustment, 6-6

Y

YTO lock loop adjustment, 6-7
YTO unlock, 4-31