75000 Series C

Service Manual

Keysight E1412A 6 1/2 Digit Multimeter

KEYSIGHT TECHNOLOGIES

Notices

© Keysight Technologies, Inc. 1996-2019

No part of this manual may be reproduced in any form or by any means (including electronic storage and retrieval or translation into a foreign language) without prior agreement and written consent from Keysight Technologies, Inc. as governed by United States and international copyright laws.

Manual Part Number

E1412-90011

Edition

Edition 3, August 2019

Published by

Keysight Technologies, Inc.
900 S. Taft Ave.
Loveland, CO 80537 USA

Sales and Technical Support

To contact Keysight for sales and technical support, refer to the support links on the following Keysight websites:

www.keysight.com/find/E1412A

(product-specific information and support, software and documentation updates)

www.keysight.com/find/assist (worldwide contact information for repair and service)

Declaration of Conformity

Declarations of Conformity for this product and for other Keysight products may be downloaded from the Web. Go to http://keysight.com/go/conformity and click on "Declarations of Conformity." You can then search by product number to find the latest Declaration of Conformity.

Technology Licenses

The hardware and/or software described in this document are furnished under a license and may be used or copied only in accordance with the terms of such license.

Warranty

THE MATERIAL CONTAINED IN THIS DOCUMENT IS PROVIDED "AS IS," AND IS SUBJECT TO BEING CHANGED, WITHOUT NOTICE, IN FUTURE EDITIONS. FURTHER, TO THE MAXIMUM EXTENT PERMITTED BY APPLICABLE LAW, KEYSIGHT DISCLAIMS ALL WARRANTIES, EITHER EXPRESS OR IMPLIED, WITH REGARD TO THIS MANUAL AND ANY INFORMATION CONTAINED HEREIN, INCLUDING BUT NOT LIMITED TO THE IMPLIED WARRANTIES OF MERCHANTABILITY AND FITNESS FOR A PARTICULAR PURPOSE. KEYSIGHT SHALL NOT BE LIABLE FOR ERRORS OR FOR INCIDENTAL OR CONSEQUENTIAL DAMAGES IN CONNECTION WITH THE FURNISHING, USE, OR PERFORMANCE OF THIS DOCUMENT OR OF ANY INFORMATION CONTAINED HEREIN. SHOULD KEYSIGHT AND THE USER HAVE A SEPARATE WRITTEN AGREEMENT WITH WARRANTY TERMS COVERING THE MATERIAL IN THIS DOCUMENT THAT CONFLICT WITH THESE TERMS, THE WARRANTY TERMS IN THE SEPARATE AGREEMENT SHALL CONTROL.

Keysight Technologies does not warrant third-party system-level (combination of chassis, controllers, modules, etc.) performance, safety, or regulatory compliance unless specifically stated.

DFARS/Restricted Rights Notices

If software is for use in the performance of a U.S. Government prime contract or subcontract, Software is delivered and licensed as "Commercial computer software" as defined in DFAR 252.227-7014 (June 1995), or as a "commercial item" as defined in FAR 2.101(a) or as "Restricted computer software" as defined in FAR 52.227-19 (June 1987) or any equivalent agency regulation or contract clause. Use, duplication or disclosure of Software is subject to Keysight Technologies' standard commercial license terms, and non-DOD Departments and Agencies of the U.S. Government will receive no greater than Restricted Rights as defined in FAR 52.227-19(c)(1-2) (June 1987). U.S. Government users will receive no greater than Limited Rights as defined in FAR 52.227-14 (June 1987) or DFAR 252.227-7015 (b)(2) (November 1995), as applicable in any technical data.

Safety Information

The following general safety precautions must be observed during all phases of operation of this instrument. Failure to comply with these precautions or with specific warnings or operating instructions in the product manuals violates safety standards of design, manufacture, and intended use of the instrument. Keysight Technologies assumes no liability for the customer's failure to comply with these requirements.

General

Do not use this product in any manner not specified by the manufacturer. The protective features of this product must not be impaired if it is used in a manner specified in the operation instructions.

Before Applying Power

Verify that all safety precautions are taken. Make all connections to the unit before applying power. Note the external markings described under "Safety Symbols".

Ground the Instrument

Keysight chassis' are provided with a grounding-type power plug. The instrument chassis and cover must be connected to an electrical ground to minimize shock hazard. The ground pin must be firmly connected to an electrical ground (safety ground) terminal at the power outlet. Any interruption of the protective (grounding) conductor or disconnection of the protective earth terminal will cause a potential shock hazard that could result in personal injury.

Do Not Operate in an Explosive Atmosphere

Do not operate the module/chassis in the presence of flammable gases or fumes.

Do Not Operate Near Flammable Liquids

Do not operate the module/chassis in the presence of flammable liquids or near containers of such liquids.

Cleaning

Clean the outside of the Keysight module/chassis with a soft, lint-free, slightly dampened cloth. Do not use detergent or chemical solvents.

Do Not Remove Instrument Cover

Only qualified, service-trained personnel who are aware of the hazards involved should remove instrument covers. Always disconnect the power cable and any external circuits before removing the instrument cover.

Keep away from live circuits

Operating personnel must not remove equipment covers or shields. Procedures involving the removal of covers and shields are for use by service-trained personnel only. Under certain conditions, dangerous voltages may exist even with the equipment switched off. To avoid dangerous electrical shock, DO NOT perform procedures involving cover or shield removal unless you are qualified to do so.

DO NOT operate damaged equipment

Whenever it is possible that the safety protection features built into this product have been impaired, either through physical damage, excessive moisture, or any other reason, REMOVE POWER and do not use the product until safe operation can be verified by service-trained personnel. If necessary, return the product to a Keysight Technologies Sales and Service Office for service and repair to ensure the safety features are maintained.

DO NOT block the primary disconnect

The primary disconnect device is the appliance connector/power cord when a chassis used by itself, but when installed into a rack or system the disconnect may be impaired and must be considered part of the installation.

Do Not Modify the Instrument

Do not install substitute parts or perform any unauthorized modification to the product. Return the product to a Keysight Sales and Service Office to ensure that safety features are maintained.

In Case of Damage

Instruments that appear damaged or defective should be made inoperative and secured against unintended operation until they can be repaired by qualified service personnel

CAUTION

Do NOT block vents and fan exhaust: To ensure adequate cooling and ventilation, leave a gap of at least 50mm (2") around vent holes on both sides of the chassis.

Do NOT operate with empty slots: To ensure proper cooling and avoid damaging equipment, fill each empty slot with an AXIe filler panel module.

Do NOT stack free-standing chassis: Stacked chassis should be rack-mounted.

All modules are grounded through the chassis: During installation, tighten each module's retaining screws to secure the module to the chassis and to make the ground connection.

WARNING

Operator is responsible to maintain safe operating conditions. To ensure safe operating conditions, modules should not be operated beyond the full temperature range specified in the Environmental and physical specification. Exceeding safe operating conditions can result in shorter lifespan, improper module performance and user safety issues. When the modules are in use and operation within the specified full temperature range is not maintained, module surface temperatures may exceed safe handling conditions which can cause discomfort or burns if touched. In the event of a module exceeding the full temperature range, always allow the module to cool before touching or removing modules from the chassis.

Safety Symbols

CAUTION

A CAUTION denotes a hazard. It calls attention to an operating procedure or practice, that, if not correctly performed or adhered to could result in damage to the product or loss of important data. Do not proceed beyond a CAUTION notice until the indicated conditions are fully understood and met.

WARNING

A WARNING denotes a hazard. It calls attention to an operating procedure or practice, that, if not correctly performed or adhered to, could result in personal injury or death. Do not proceed beyond a WARNING notice until the indicated conditions are fully understood and met.

Products display the following symbols:


Warning, risk of electric shock


Refer to manual for additional safety information.


Earth Ground.


Chassis Ground.


Alternating Current (AC).


Direct Current (DC)

Contents

1 General Information

Introduction 11
Safety Considerations 11
Warnings and Cautions. 12
Multimeter Description 13
Multimeter Specifications 13
Multimeter Serial Numbers. 13
Multimeter Options 13
Recommended Test Equipment 14
Introduction 11
Initial Inspection 11
Preparation for Use 12
Environment 12
Shipping the Multimeter 12

2 Operating Instructions

Introduction 13
Multimeter Operation. 13
Preventive Maintenance 13
Warnings and Cautions 14
Cleaning Procedure. 14
Functional Test (Self Test). 15
Self-Test Procedure. 15
Example: Self-Test 15

3 Verification Tests

Introduction 17
Recommended Test Equipment 17
300Vac (50 kHz) Testing 17
Test Conditions 18
Verification Tests 19
Recording Your Test Results 19
Performance Verification Test Programs 19
C Programs. 19
Project Type: Project Files:. 19
Memory Model: Directory Paths:. 20
Visual Basic Programs 20
Project Files:. 20

Windows 3.1 Use of the VISA.BAS file . . . 20
Executable Files (.EXE) . . . 20
Printing Results . . . 21
Test Frequency . . . 21
Functional Test . . . 22
Functional Test Procedure . . . 22
Example: Self-Test . . . 22
Quick Verification Tests . . . 23
Performance Verification . . . 24
Zero Offset Verification . . . 24
DC Gain Verification . . . 26
DC Voltage Gain Verification . . . 27
4-Wire Resistance Gain Verification . . . 27
2-Wire Resistance Gain Verification . . . 28
DC Current Gain Verification . . . 29
AC Voltage Gain Verification . . . 30
AC Current Gain Verification . . . 32
Frequency Gain Verification Test Procedure . . . 33
Optional AC Voltage Gain Verification . . . 34
Performance Test Record . . . 35
Multimeter Accuracy . . . 35
Measurement Uncertainty . . . 35
Test Accuracy Ratio (TAR) . . . 35

4 Adjustments

Introduction . . . 41
Closed-Cover Electronic Calibration . . . 41
Keysight Technologies Calibration Services . . . 41
Calibration Interval . . . 41
Automating Adjustment Procedures . . . 42
CALibration Command Summary . . . 42
Calibration Security Code . . . 42
Check Calibration Security State . . . 43
Example . . . 43
Changing the Security Code . . . 43
Example . . . 43
Unsecuring the Multimeter Without the Security Code . . . 44
Calibration Count (CAL:COUNt?) . . . 45
Calibration Message . . . 45
Aborting an Adjustment in Progress . . . 45
Adjustment Procedures . . . 46
Adjustment Conditions . . . 46
General Procedure . . . 46
Zero Adjustment . . . 47

DC Voltage Gain Adjustment 49
4-Wire Ohms Gain Adjustment 51
2-Wire Ohms Gain Adjustment 54
Test Lead Resistance 54
DC Current Gain Adjustment 55
AC Voltage Gain 57
AC Current Gain Verification 59
Frequency Gain Adjustment 59
CALibration Command Summary 61
Subsystem Syntax 61
:COUNt? 61
Comments 61
Example 61
:LFRequency 61
Comments 61
Example 62
:LFRequency? 62
Comments 62
Example 62
:SECure:CODE 62
Comments 62
Example 63
:SECure:STATe 63
Parameters 63
Comments 63
Example 63
:SECure:STATe? 63
Example 63
:STRing 64
Parameters 64
Comments 64
Example 64
:STRing? 64
Example 64
:VALue 65
Parameters 65
Comment 65
Example 65
:VALue? 65
Example 65
:ZERO:AUTO 65
Parameters 66
Comments 66
:ZERO:AUTO? 66
CALibration? 67
Comments 67

5 Keysight E1412A Replaceable Parts

Introduction 69
Exchange Assemblies 69
Ordering Information 69

6 Backdating

7 Service

Introduction 75
Equipment Required 75
Service Aids 75
Troubleshooting 76
Identifying the Problem 76
Self-Test Procedures 76
Power-On Self-Test 76
Self-Test Errors 77
Self-Test Descriptions 78
Operator Errors 81
Unit does not operate properly 81
Unit reports an error between 740 and 748 81
Unit fails self-test 81
Current input is inoperative 81
Readings indicate OVERLOAD 81
Readings are inaccurate 81
Readings show excessive noise 82
Readings indicate zero with any input applied 82
Catastrophic Failure 82
Performance Out of Specification 82
To Replace the Current Input Fuse 82
To Replace the +12V Fuse 82
To Replace the +5V Fuse 83
Inspecting Assemblies 84
Check for Heat Damage 84
Check for Correct Address Switch Setting 84
Inspect Multimeter Front Panel/PC Assembly for Damage 84
Repair/Maintenance Guidelines 85
Electrostatic Discharge (ESD) Precautions 85
E1412A Module Disassembly 85
E1412A Module Reassembly 87
Input Terminal Replacement 88
BNC Connector Replacement 89
Soldering Printed Circuit Boards 90
Post-Repair Safety Checks 90

A E1412A Multimeter Specifications

DC Characteristics . . . 91
Accuracy Specifications ± (% of reading + % of range) [1] . . . 91
Measuring Characteristics . . . 92
DC Voltage . . . 92
Resistance . . . 92
DC Current . . . 92
DC:DC Ratio . . . 92
AC Characteristics . . . 94
Accuracy Specifications ± (% of reading + % of range) [1] . . . 94
. . . 94
Measuring Characteristics . . . 95
Operating Characteristics . . . 96
Frequency and Period Characteristics . . . 97
Accuracy Specifications ±(% of reading) [1] [4] . . . 97
Measuring Characteristics . . . 97
Operating Characteristics [5] . . . 98
General Specifications . . . 99
To Calculate Total Measurement Error . . . 100
Understanding the “% of reading” Error . . . 100
Understanding the “% of range” Error . . . 101
Total Measurement Error . . . 101
Error Example . . . 101
Interpreting Multimeter Specifications . . . 102
Number of Digits and Overrange . . . 102
Sensitivity . . . 102
Resolution . . . 102
Accuracy . . . 102
Transfer Accuracy . . . 103
24-Hour Accuracy . . . 103
90-Day and 1-Year Accuracy . . . 103
Temperature Coefficients . . . 104
Configuring for High Accuracy Measurements . . . 104
DC Voltage, DC Current, and Resistance Measurements: . . . 104
AC Voltage and AC Current Measurements: . . . 104
Frequency and Period Measurements: . . . 104

B Keysight E1412A Multimeter Error Messages

Execution Errors . . . 105

1 General Information

Introduction

This manual contains information required to test, adjust, troubleshoot, and repair the Keysight E1412A C-Size VXI 6 1/2 Digit Multimeter. See the

Keysight E1412A User's Manual for additional information. Figure 1-1 shows the E1412A C-size multimeter.

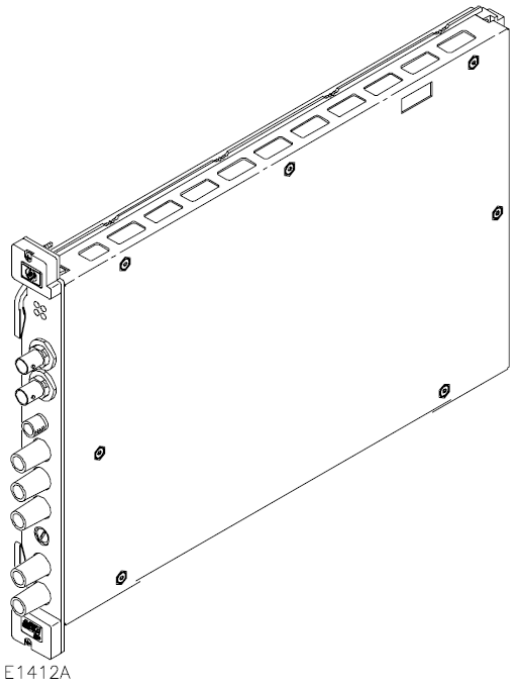

Figure 1 Keysight 6 1/2-Digit E1412A Multimeter

Safety Considerations

This product is a Safety Class I instrument that is provided with a protective earth terminal when installed in the mainframe. The mainframe, multimeter, and all related documentation should be reviewed for familiarization with safety markings and instructions before operation or service.

Refer to the WARNINGS page in this manual for a summary of safety information. Safety information for preventive maintenance, testing, adjusting, and service follows and is also found throughout this manual.

Warnings and Cautions

This section contains WARNINGS which must be followed for your protection and CAUTIONS which must be followed to avoid damage to the equipment when performing instrument maintenance or repair.

WARNING

SERVICE-TRAINED PERSONNEL ONLY. The information in this manual is for service-trained personnel who are familiar with electronic circuitry and are aware of the hazards involved. To avoid personal injury or damage to the instrument, do not perform procedures in this manual or do any servicing unless you are qualified to do so.

CHECK MAINFRAME POWER SETTINGS. Before applying power, verify that the mainframe setting matches the line voltage and that the correct fuse is installed. An uninterruptible safety earth ground must be provided from the main power source to the mainframe input wiring terminals, power cord, or supplied power cord set.

GROUNDING REQUIREMENTS. Interruption of the protective (grounding) conductor (inside or outside the mainframe) or disconnecting the protective earth terminal will cause a potential shock hazard that could result in personal injury. (Grounding one conductor of a two-conductor outlet is not sufficient protection.)

IMPAIRED PROTECTION. Whenever it is likely that instrument protection has been impaired, the mainframe must be made inoperative and be secured against any unintended operation.

USING AUTOTRANSFORMERS. If the mainframe is to be energized via an autotransformer (for voltage reduction) make sure the common terminal is connected to neutral (that is, the grounded side of the main's supply).

CAPACITOR VOLTAGES. Capacitors inside the mainframe may remain charged even when the mainframe has been disconnected from its source of supply.

USE PROPER FUSES. For continued protection against fire hazard, replace the line fuses only with fuses of the same current rating and type (such as normal blow, time delay, etc.). Do not use repaired fuses or short-circuited fuseholders.

CAUTION Static electricity is a major cause of component failure. Observe anti-static techniques whenever working on the multimeter to prevent damage to the electrical components in the multimeter.

Multimeter Description

The VXIbus C-size Keysight E1412A Multimeter is a message-based module. Being message-based, the module does not require a driver be loaded in the resource manager as do register-based modules. The E1412A can operate in a C-sized VXIbus mainframe using a Command Module, an embedded controller or VXLink.

Multimeter Specifications

Multimeter specifications are listed in Appendix A of the *Keysight E1412A User's Manual and SCPI Programmer's Guide*. These specifications are the performance standards or limits against which the instrument may be tested.

Multimeter Serial Numbers

Serial numbers identify the country of origin and the year of manufacture. The serial number suffix is assigned sequentially to each instrument.

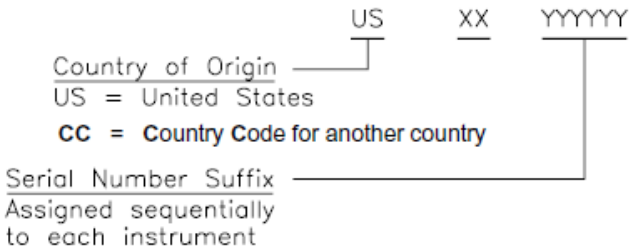

Multimeter Options

You can order Option 1BN which provides a MIL-STD-45662A Calibration Certificate, or Option 1BP which provides the Calibration Certificate and measurement data. Contact your nearest Keysight Technologies Sales and Service Office for information about Options 1BN and 1BP.

Recommended Test Equipment

Table 1-1 lists the test equipment recommended for testing and adjusting the multimeter. Essential requirements for each piece of test equipment are described in the Requirements column.

Table 1-1 Recommended Test Equipment

Instrument	Requirements	Recommended Model	Use[1]
Controller	Requires an installed GPIB interface or the VXLink interface. NOTE: This controller is not needed if an embedded controller is used.	IBM Compatible running Windows 3.1, Windows 95 or Windows NT	A,F,Q,P
Mainframe	Compatible with multimeter	E1401B (C-size)	A,F,Q,P
VXI: Command Module, VXLink or Embedded Controller	C-size Command Module C-size VXLink C-size Embedded Controller	Keysight E1406A/B Keysight E1483A Keysight RADEPC7A	A,F,Q,P
AC Standard	Frequency Range: 10 Hz to 300 kHz Voltage Range: 10 mV rms to 200 V rms	Fluke 5700A	A,Q,P
Amplifier	Required to adjust and performance verify the 300V, 50 kHz point. Max Frequency required: 50 kHz Max Voltage required: 300 V rms	Fluke 5725A (auxiliary amp to the 5700A)	A,P
DC Standard	Voltage Range: -10 v to +300 V	Fluke 5700A	A,Q,P
Resistance Standard	Values: 100 Ω to 100 MΩ	Fluke 5700A	A,Q,P
Frequency Standard	Frequency Range: 100 Hz to 100 kHz	Keysight 3325A/B (with 50 Ω termination)	A,Q,P
Digital Multimeter[2]	Resistance Range: 100 Ω to 100 MΩ	Keysight 3458A	A,Q,P

1 A = Adjustments, F = Functional Verification, Q = Quick Verification Tests, P = Performance Verification Tests

2 Transfer standard for resistance measurements to meet MIL-STD 45662A requirements.

2 Installation

Introduction

This chapter provides information for installing the Keysight E1412A Multimeter, including:

- initial inspection
- preparation for use
- environment
- shipping

Initial Inspection

Inspect the shipping container for damage. If the shipping container or cushioning material is damaged, keep the container until the shipment contents have been checked and the instrument has been checked mechanically and electrically. See Chapter 4 for procedures to check electrical performance.

WARNING **To avoid possible hazardous electrical shock, do not perform electrical tests if there are signs of shipping damage to any portion of the outer enclosure (covers, panels, etc.).**

If the contents are incomplete, if there is mechanical damage or defect, or if the instrument does not pass the electrical performance tests, notify your nearest Keysight Technologies Sales and Service Office. If the shipping container is damaged or the cushioning material shows signs of stress, notify the carrier as well as Keysight, and keep the shipping materials for the carrier's inspection.

Preparation for Use

See Chapter 1 of the *Keysight E1412A User's Manual and SCPI Programmer's Guide* to prepare the Keysight E1412A multimeter for use. See the appropriate mainframe user's manual to prepare your mainframe. If your mainframe is not manufactured by Keysight Technologies, consult the manufacturer for a list of available manuals.

Environment

The recommended operating environment for the Keysight E1412A multimeter is:

Temperature ..... 0°C to +55°C

Humidity ..... <65% relative (0°C to +40°C)

For storage and shipment, the recommended environment is:

Temperature ..... -40°C to +75°C

Humidity ..... <65% relative (0°C to +40°C)

Shipping the Multimeter

If you need to return the Keysight E1412A multimeter to Keysight Technologies, first remove any adapters or connectors before packaging the instrument for shipment. When you return the instrument to Keysight, attach a tag to the instrument identifying the owner and indicating the service or repair required. In any correspondence, refer to the instrument by model number and full serial number.

When shipping the instrument, we recommend using containers and materials identical to those used in factory packaging, which are available through Keysight Technologies Sales and Service Offices. Mark the shipping container "**FRAGILE**" to assure careful handling.

If you use other (commercially available) shipping materials, place the instrument in an anti-static bag, then wrap the instrument in heavy paper or plastic. Use a strong shipping container. A double-wall carton of 2.4 MPa (350 psi) test material is adequate.

Use enough shock-absorbing material (75 to 100 mm layer; 3 to 4 inches) around all sides of the instrument to provide a firm cushion and prevent movement in the container. Protect the front panel with cardboard. Seal the shipping container securely and mark the container "**FRAGILE**" to assure careful handling.

3 Operating Instructions

Introduction

This chapter provides operating information for the Keysight E1412A multimeter, including:

- Multimeter operation
- Preventive maintenance
- Operator's check (self-test)

Multimeter Operation

The *Keysight E1412A User's Manual and SCPI Programmer's Guide* is your reference for multimeter operation. The User's Manual contains the following:

- Multimeter Module Setup
- Multimeter Application Examples
- Multimeter Command Reference
- Multimeter Specifications
- Multimeter Error Messages
- Measurement Speed Versus Accuracy

Preventive Maintenance

Preventive maintenance for the Keysight E1412A multimeter consists of periodically cleaning the front panel of the multimeter and then performing Functional Test (self-test using the *TST? command). You should clean the front panel yearly (or more often if the multimeter is used in a very dusty or humid area). We do not recommend disassembling the multimeter to clean the inside of the module. However, if the multimeter is taken apart for any reason, the printed circuit assemblies (PCAs) can be blown off with an airgun. See Table 3-1 for recommended cleaning equipment and supplies.

Table 2-1 Recommended Cleaning Equipment

Description	Recommended Use
Airgun (grounded nozzle)	Remove dust from printed circuit boards
Mild soap solution	Clean faceplate panel
Lint-free cloth	Clean faceplate panel

Warnings and Cautions

WARNING **To eliminate possible electrical shock, disconnect AC power from the mainframe and disconnect all inputs to the multimeter before removing the multimeter from the mainframe.**

CAUTION The multimeter printed circuit assemblies (PCAs) contain static-sensitive devices that can be damaged when handling. Use static control devices (wrist straps, static mats, etc.) when handling the instrument. See "Repair/Maintenance Guidelines" in Chapter 8 for electrostatic discharge (ESD) precautions.

Do not use a vacuum cleaner to remove dust from the multimeter PCAs, as these assemblies have static-sensitive devices that can be damaged by a vacuum cleaner.

Cleaning Procedure

Use the following procedure to clean the multimeter.

1 Clean the Multimeter faceplate panel with a mild soap solution and a lint-free cloth.

NOTE Disassembling the multimeter exposes the assemblies to possible ESD damage and is usually unnecessary. Do not disassemble the module unless you must replace one of the parts listed in Chapter 6.

Perform steps 2 through 4 only if replacing a PCA component and disassembly is required.

2 Disassemble the multimeter as described in Chapter 8.

3 Use an airgun with a grounded nozzle to remove dust from printed circuit board surfaces.

4 Reassemble the multimeter as described in Chapter 8.

Functional Test (Self Test)

The Functional Test for the Keysight E1412A multimeter consists of sending the self-test (*TST?) command and checking the response. The functional test can be used at any time to verify that the multimeter is connected properly and is responding to the self-test command.

As required, see the command module user's manual for information on address selection. See the Keysight E1412A User's Manual and SCPI Programming Guide for information on multimeter SCPI commands.

Self-Test Procedure

1. Verify that the multimeter is properly installed in the mainframe and that the mainframe has passed its power-on test. Do not connect input signals to the multimeter input terminals.
2. Execute the multimeter self-test using the *TST? command.
3. A "0" returned means no self-test failure, while any other number returned means a failure was detected. See Appendix B for a list of all self-test errors, error messages and error descriptions.

NOTE If an incorrect address is used, the multimeter will not respond. Verify you have a proper address selection.

Example: Self-Test

This example performs a multimeter self-test. Any number other than 0 returned indicates a test failure.

```
*TST?           Send the self-test command
ENTER           the response Read self-test result
```

4 Verification Tests

Introduction

This chapter provides information on performance verification of the Keysight E1412A multimeter. You can perform performance verification tests at three different levels depending on your need:

- Functional Verification Test - A series of internal verification tests (self-tests) that give a high confidence that the multimeter is operational. The self-tests take less than 20 seconds to complete.
- Quick Verification Test - A combination of the internal self-tests and selected verification tests (specified by Q in the verification tables). These tests performed under computer control over the GPIB can be completed in less than four minutes.
- Performance Verification Test - An extensive set of tests that are recommended as an acceptance test when the instrument is first received or after performing calibration of the multimeter. These tests performed under computer control over the GPIB can be completed in less than 20 minutes. Allowing time for thermal offset voltages to settle, on ranges where thermal voltages impact on the measurement, can add another 10 minutes to the testing.

WARNING **Do not perform any of the following verification tests unless you are a qualified, service-trained technician and have read the WARNINGS and CAUTIONS in Chapter 1 (and the Warnings and Safety information preceding chapter 1).**

Recommended Test Equipment

Test equipment recommended for the performance verification and calibration procedures are listed in Table 4-1. Use a source with accuracy requirements indicated in the table for any substitute calibration standard.

300Vac (50 kHz) Testing

NOTE: The Fluke 5725A Amplifier is only necessary if you require testing the 300V, 50 kHz AC Voltage point (see Table 4-1).

A suggested alternate method is to use the highly accurate Keysight 3458A 8-1/2 digit Digital Multimeter to measure less accurate, yet stable sources. Use the Keysight 3458A measurement value as the calibration value when calibrating or as the exact value you performance verify against.

Table 4-1 Recommended Test Equipment

Application	Recommended	Accuracy Requirements
Zero Calibration and Zero Offset Verification	copper ONLY short	4-terminal short using ONLY copper interconnections
DC Voltage	Fluke 5700A	<1/5 dmm 24 hour spec ± 1ppm linearity
DC Current	Fluke 5700A	<1/5 dmm 24 hour spec
Resistance	Fluke 5700A	<1/5 dmm 24 hour spec
AC Voltage	Fluke 5700A 5725A (300V @ 50 kHz)	<1/5 dmm 24 hour spec
AC Current	Fluke 5700A	<1/5 dmm 24 hour spec
Frequency	Keysight 3325A	<1/5 dmm 24 hour spec

Special care must be taken to ensure that the calibration standards and test procedures used do not introduce additional errors. Ideally, the standards used to test and calibrate the multimeter should be an order of magnitude more accurate than each multimeter range full scale error specification.

Test Conditions

All test procedures should comply with the following test conditions:

- Ambient temperature of the test area is between 18°C and 28°C and stable to within ±1°C.
- Ambient relative humidity of the test area is <80%.
- Must have a two hour warm-up with all input signals removed before verification or adjustment.
- Use only copper connections to minimize thermal offset voltages.
- Use shielded twisted PTFE insulated cable or other high impedance, low dielectric absorption cable for all measurements to reduce high resistance errors.
- Keep cables as short as possible. Long test leads can act as an antenna causing the pick-up of ac signals and contributing to measurement error.
- Allow 5 minutes after handling input connections for thermal offset voltage settling.

- For effective normal mode rejection (NMR), the proper power line reference frequency must be set. The Keysight E1412A default is 60 Hz at power-on and must be set to 50 Hz or 400 Hz, if required, using the CAL:LFR command

Verification Tests

Recording Your Test Results

A Performance Test Record, Table 4-7, at the end of this chapter, provides space to enter the results of each Performance Verification test and to compare the results with the upper and lower limits for the test. You can make copies of this form for use in periodic performance verifications.

The value in the "Measurement Uncertainty" column of Table 4-7 is derived from the specifications of the source used for the test, and represents the expected accuracy of the source. The value in the "Test Accuracy Ratio (TAR)" column of Table 4-7 is the ratio of multimeter accuracy to measurement uncertainty.

Performance Verification Test Programs

Performance Verification Tests and Quick Verification Test programs are provided so you can performance verify your multimeter. These programs were developed on a 486 IBM compatible computer running Windows 3.1®. The computer has an Keysight 82341 GPIB interface and Keysight SICL/ Windows 3.1® and Windows NT® for GPIB software.

C Programs

All projects written in C programming language require the following settings, files or paths to work properly:

Project Type: Project Files:

QuickWin application (.EXE)

1. <*source code file name*>.C (which includes the VISA.h header file)

2. One of the following files from the I/O Libraries for Instrument Control: [drive:]\VXIPNP\WIN\LIB\MSC\VISA.LIB (Microsoft® compiler) [drive:]\VXIPNP\WIN\LIB\BC\VISA.LIB (Borland® compiler)

Memory Model: Directory Paths:

Options | Project | Compiler | Memory Model large
Options | Directories
Include File Paths: [drive:]\VXIPNP\WIN\INCLUDE
Library File Paths: [drive:]\VXIPNP\WIN\LIB\MSC (Microsoft®)
[drive:]\VXIPNP\WIN\LIB\BC (Borland®)

Visual Basic Programs

All projects written in the Visual Basic® programming language require the following settings, files or paths to work properly:

Project Files:

1. <*source code file name*>.FRM
2. The following file from the Keysight I/O Libraries for Instrument Control: [drive:]\VXIPNP\WIN\INCLUDE\VISA.BAS (see note below)
3. Visual Basic® file CONSTANT.TXT for message box and input box variables

Windows 3.1 Use of the VISA.BAS file

You must make the following modification to the VISA.BAS file for it to be compatible with Windows 3.1® application. Do not modify the original file but make a new file with the modifications as follows:

1 Import the [drive:]\VXIPNP\WIN\INCLUDE\VISA.BAS file into a text editor or word processor.

2 In the "- Memory I/O Operations ----------" section, change the variable "spc" to "cps" in the first four lines (the viIn8, viIn16, viOut8 and viOut16 functions). "spc" is the second variable passed to the function.

3 Perform a "Save As..." on the file in the same directory with the name VISA_31.BAS (do not save it as VISA.BAS again). You still have the original VISA.BAS file for Windows 95® or Windows NT® use.

4 Include the [drive:]\VXIPNP\WIN\INCLUDE\VISA_31.BAS file in your Visual Basic® project files in place of the VISA.BAS file.

Executable Files (.EXE)

Executable files (.EXE files) are provided on the service disk for immediate operation without the need for an ANSI C compiler or a Visual Basic® compiler. The C language executable files were compiled using Microsoft® Visual C++? Version 2.0. The Visual Basic® executable files were compiled using Microsoft® Visual Basic® Version 3.0.

Printing Results

You may want to modify the source code and recompile the project to add statements to print the measured test results to your local printer. Manually you can use the Performance Test Record as described on the previous page in the section "Recording Your Test Results".

Test Frequency

See Table 4-1, *Recommended Test Equipment*, for test equipment requirements. You should complete the Performance Verification tests at one year intervals. For heavy use or severe operating environments, perform the tests more often.

Functional Test

The procedure in this section is used to quickly verify that the multimeter is functioning. This test should be performed anytime the user wants to verify that the multimeter is connected properly and is responding to basic commands.

Functional Test Procedure

This test verifies that the multimeter is communicating with the command module, external controller, and/or external terminal by performing a multimeter self-test. You have a high confidence (90%) that the multimeter is operational if self-test passes.

1. Verify that the multimeter and command module or system resource manager (e.g., embedded controller) are properly installed in the mainframe.
2. Remove any input connections to the multimeter input terminals. The input and sense terminals should be open. Errors may be induced by ac signals present on the multimeter's input terminals during a self-test.
3. Execute the multimeter self-test using the *TST? command.
4. A "0" returned means self-test passed with no failures. Any other value returned is a self-test error code and means a failure was detected. See Chapter 8 for troubleshooting information and self-test error codes.

NOTE If an incorrect address is used, the multimeter will not respond. Verify proper address selection before troubleshooting.

Example: Self-Test

This BASIC example performs a multimeter self-test. Any number other than 0 returned indicates a test failure. See Chapter 8 for self-test error codes.

```
10 OUTPUT 70903;"*TST?"           !Send the self-test command
20 ENTER 70903;A            !Read the test result
30 PRINT A            !Display the result 40 END
```

Quick Verification Tests

The Quick Verification procedure is a combination of internal self-test and an abbreviated set of the Performance Verification Tests that follow (specified by the letter Q in the performance verification test tables). This test provides a simple method to achieve high confidence in the meter's ability to functionally operate and meet specifications. These tests represent the absolute minimum set of performance tests that are recommended following any service activity. These tests are designed to provide a moderate level of confidence that the instrument is meeting specifications.

Perform the Quick Verification tests by doing the following:

- Perform a compete self-test using the *TST? command.
- Perform the performance verification tests indicated with the letter Q.

If your multimeter fails Quick Verification, recalibrate the section that fails. For example, if ac voltage fails, it may be because the internal shields have been removed and reinstalled. Recalibrate the ac voltage function only and reverify the performance of ac voltage.

Carefully review the test conditions at the beginning of the chapter for possible causes of performance verification test failures. Take into consideration all test conditions, your test set-up and the handling of test connectors and shorting devices. Contact your nearest Keysight Technologies service office if your multimeter fails to meet specification.

Performance Verification

The procedures in this section are used to test the electrical performance of the multimeter using the specifications in Appendix A of the *E1412A User's Manual* as the performance standards.

The Performance Verification Tests are recommended as acceptance tests when the instrument is first received. The acceptance test results should be compared against 90 day test limits. The 24 hour test limits should only be used for verification of a function within 24 hours after performing a calibration of that function (this will have set a new calibration constant for that function).

The performance verification tests should be repeated at each calibration interval following acceptance. If the Keysight E1412A multimeter fails performance verification, adjustment or repair is needed.

Zero Offset Verification

This procedure is used to check the zero offset performance of the Keysight E1412A multimeter. A low thermal EMF four-terminal short is applied to the input of the meter.

1. Check the "Test Conditions" section at the beginning of this chapter.
2. Verify the Input and Sense terminals are open. Set the DC Current function and select each range in the order shown in Table 4-1. Compare the measurement results to the appropriate test limits shown in Table 4-1.
3. Apply a 4-wire short (copper) across the Input HI-LO and Sense HI-LO terminals as shown in Figure 4-1. Wait five minutes for thermal offset voltage settling.

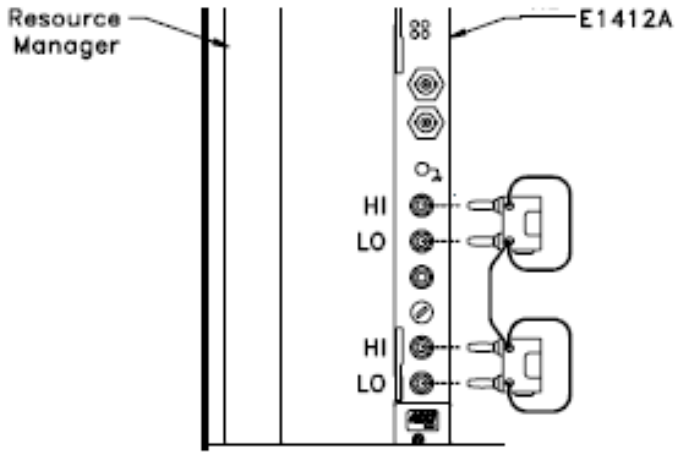

Figure 4-1 Zero Offset Verification Test Setup

4 4. Select each function and range in the order shown in Table 4-1. Compare the measurement results to the appropriate test limits shown in the table.

Table 4-2 Zero Offset Verification Test Points

INPUT	FUNCTION	QUICK VERIFICATION	Keysight E1412A Range	Error from nominal (volts and current) Error from actual (4-W and 2-W ohms)		
				24 hour [1]	90 day [1]	1 year [1]
4-wire short	DC Volt	Q	100 mV	± 3 µV	± 3.5 µV	± 3.5 µV
			1 V	± 6 µV	± 7 µV	± 7 µV
			10 V	± 40 µV	± 50 µV	± 50 µV
			100 V	± 600 µV	± 600 µV	± 600 µV
			300 V	± 5.4 mV	± 9 mV	± 9 mV
4-wire short	4-wire Ohms and 2-wire Ohms		100 Ω	± 3 mΩ	± 4 mΩ	± 4 mΩ
			1 kΩ	± 5 mΩ	± 10 mΩ	± 10 mΩ
		Q	10 kΩ	± 50 mΩ	± 100 mΩ	± 100 mΩ
			100 kΩ	± 500 mΩ	± 1 Ω	± 1 Ω
			1 MΩ	± 10 Ω	± 10 Ω	± 10 Ω
			10 MΩ	± 100 Ω	± 100 Ω	± 100 Ω
			100 MΩ	± 10 kΩ	± 10 k Ω	± 10 kΩ
open	DC Current		10 mA	± 1 µA	± 2 µA	± 2 µA
		Q	100 mA	± 4 µA	± 5 µA	± 5 µA
			1 A	± 60 µA	± 100 µA	± 100 µA
			3 A	± 600 µA	± 600 µA	± 600 µA

[1] For 2-wire ohms these errors assume you are using CALC:NULL:OFFS to null the effect of test lead resistance. See the Keysight E1412A User's Manual for the section titled 2-Wire Ohms Measurement Connections in Chapter 1 and the section titled "NULL (Relative) Function" in Chapter 2. Add an additional 200 mΩ of error to the specification value in the table if you do not null the lead resistance (e.g., 24 hour error for 100 mV range would be ± 203 µV).

Q = Quick performance verification test points.

DC Gain Verification

Table 4-3 DC Gain Verification Tests

INPUT FROM CALIBRATOR	FUNCTION	QUICK VERIFICATION	Keysight E1412A Range	Error from nominal (volts and current) Error from actual (4-W and 2-W ohms)		
				24 hour [1]	90 day [1]	1 year [1]
100 mV	DC Volt see Figure 4-2 for test setup		100 mV	± 6 µV	± 7.5 µV	± 8.5 µV
1 V			1 V	± 26 µV	± 37 µV	± 47 µV
10 V		Q	10 V	± 190 µV	± 250 µV	± 400 µV
-10 V			10 V	± 190 µV	± 250 µV	± 400 µV
100 V		Q	100 V	± 2.6 mV	± 4.1 mV	± 5.1 mV
300 V			300 V	± 11.4 mV	± 19.5 mV	± 22.5 mV
100 Ω	4-wire Ohms and 2-wire Ohms see Figure 4-2 (4-W) and Figure 4-3 (2-W) for test setups		100 Ω	± 6 mΩ	± 12 mΩ	± 14 mΩ
1 kΩ		Q	1 kΩ	± 25 mΩ	± 90 mΩ	± 110 mΩ
10 kΩ			10 kΩ	± 250 mΩ	± 900 mΩ	± 1.1 Ω
100 kΩ [2]			100 kΩ	± 2.5 Ω	± 9 Ω	± 11 Ω
1 MΩ [2]			1 MΩ	± 30 Ω	± 90 Ω	± 110 Ω
10 MΩ [2]		Q	10 MΩ	± 1.6 kΩ	± 3.6 kΩ	± 5.5 kΩ
100 MΩ [2]			100 MΩ	± 810 kΩ	± 810 kΩ	± 810 kΩ
10 mA	DC Current see Figure 4-4 for test setup		10 mA	± 1.5 µA	± 7 µA	± 9 µA
100 mA		Q	100 mA	± 14 µA	± 55 µA	± 75 µA
1 A			1 A	± 1.06 mA	± 1.4 mA	± 1.6 mA
2 A			3 A	± 14.6 mA	± 15 mA	± 15 mA

[1] For 2-wire ohms these errors assume you are using CALC:NULL:OFFS to null the effect of test lead resistance. See the 2-Wire Ohms Measurement Connections in Chapter 1 and the section titled "NULL (Relative) Function" in Chapter 2 of the Keysight E1412A User's Manual. Add an additional 200 mΩ of error to the specification value in the table if you do not null the lead resistance (e.g., 24 hour error for 100 mV range would be ± 206 µV).

[2] Use shielded twisted pair PTFE insulated cables to reduce settling and noise errors.

Q = Quick performance verification test points.

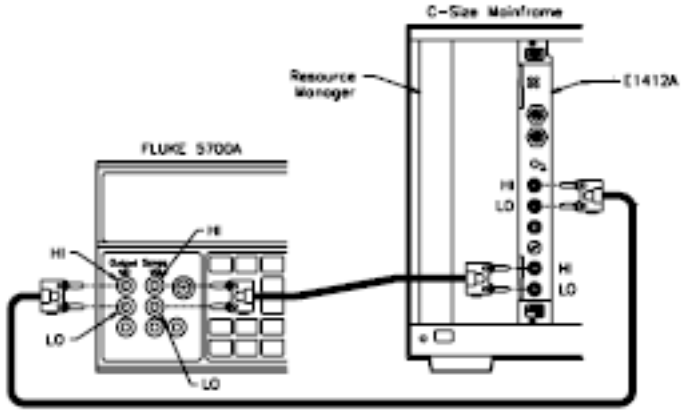

Figure 4-2 DC Voltage and Resistance (4-Wire) Gain Verification Test Setup.

DC Voltage Gain Verification

Connect the DC Standard across the Keysight E1412A HI and LO Input terminals and the HI and LO Sense terminals as shown in Figure 4-2.

1 Set up the multimeter as follows:
Reset the multimeter *RST
Configure for DC voltage, 100mV CONF:VOLT:DC 0.1

2 Set the DC Standard output to 100 mV.

3 Perform the measurement using the READ? command.

4 Verify the result is within specifed limits and record the result.

5 Change ranges using FRES:RANG <range> and make a measurement for each 4-Wire resistance input and range shown in Table 4-2 verifying the result is within specifed limits. Record the result.

4-Wire Resistance Gain Verification

Connect the DC Standard across the Keysight E1412A HI and LO Input terminals and the HI and LO Sense terminals as shown in Figure 4-2.

1 Set up the multimeter as follows: Configure for 4-Wire Resistance, 100?
CONF:FRES 100

2 Set the DC Standard output to output a 4-wire 100Ω (this requires EXTernal SENSE ON for the Fluke 5700).

3 Perform the measurement using the READ? command.

4 Verify the result is within specifed limits and record the result.

5 Change ranges using FRES:RANG <range> and make a measurement for each 4-Wire resistance input and range shown in Table 4-2 verifying the result is within specifed limits. Record the result.

2-Wire Resistance Gain Verification

Disconnect the input to the multimeter HI and LO Sense terminals and disconnect the calibrator from the multimeter input cable.

1. Connect a short across the HI and LO terminals of the multimeter test leads (at the calibrator end) as shown in Figure 4-3.
2. Measure the 2-Wire OHMS function test cable resistance as follows:

Configure for 2-Wire Resistance, 100Ω	CONF:RES 100
Set CALCulate function to NULL	CALC:FUNC NULL
Enable the calculate state	CALC:STAT ON
Measure the cable resistance	READ?

   Enter the measured value (this first measurement stores the cable resistance as the NULL OFFSet)
3. Remove the short from the cable and connect the DC Standard across the Keysight E1412A HI and LO Input terminals.
4. Set the DC Standard output to output a 2-wire 100Ω (this requires EXTernal SENSE OFF for the Fluke 5700).
5. Perform the measurement using the READ? command.
6. Verify the result is within specified limits and record the result.
7. Change ranges using RES:RANG <range> and make a measurement for each 2-Wire resistance input and range shown in Table 4-2 verifying the result is within specified limits. Record the result.

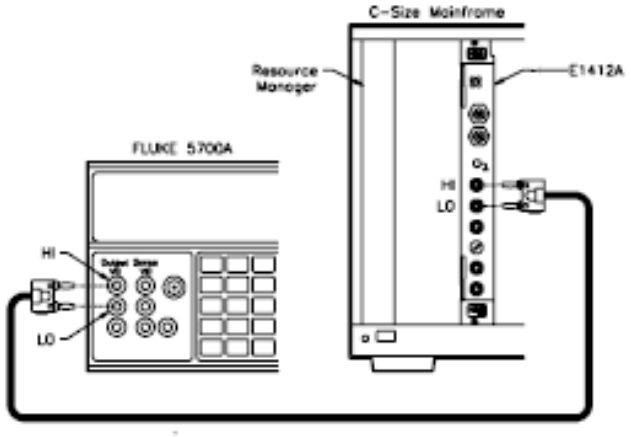

Figure 4-3 Resistance (2-Wire) Gain Verification Test Setup.

DC Current Gain Verification

Connect the DC Standard across the Keysight E1412A I and LO Input terminals as shown in Figure 4-4.

1. Set up the multimeter as follows: Configure for DC current, 10mA CONF:CURR:DC 0.01
2. Set the DC Standard output to 10 mA.
3. Perform the measurement using the READ? command.
4. Verify the result is within specified limits and record the result.
5. Change ranges using CURR:RANG <range> and make a measurement for each DCI input and range shown in Table 4-2 verifying the result is within specified limits. Record the result.

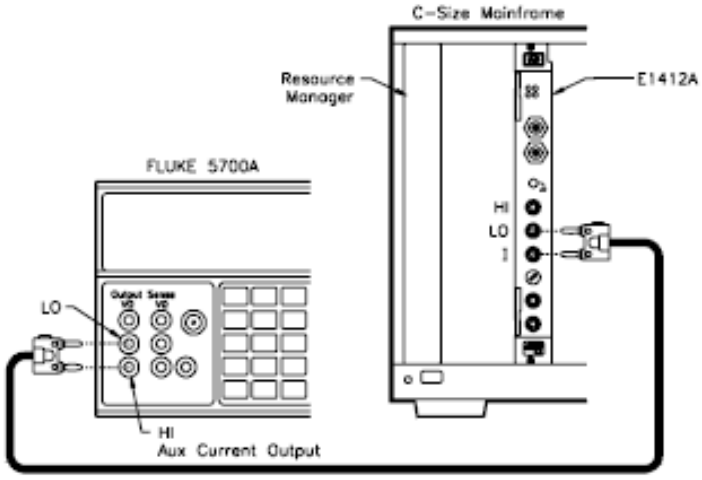

Figure 4-4 DC Current Gain Test Setup.

AC Voltage Gain Verification

Table 4-4 AC Voltage Gain Verification Tests

INPUT	INPUT FREQUENCY	Keysight E1412A Range	QUICK VERIFICATION	Error from nominal		
				24 hour	90 day	1 year
10 mV	1 kHz	100 mV		± 34 µV	± 45 µV	± 46 µV
100 mV	1 kHz	100 mV		± 70 µV	± 90 µV	± 100 µV
100 mV	50 kHz	100 mV	Q	± 150 µV	± 160 µV	± 170 µV
1 V	1 kHz	1 V		± 600 µV	± 800 µV	± 900 µV
1 V	50 kHz	1 V		± 1.4 mV	± 1.6 mV	± 1.7 mV
10 V	10 Hz	10 V		± 37 mV	± 38 mV	± 38 mV
10 V	1 kHz	10 V		± 6 mV	± 8 mV	± 9 mV
10 V	50 kHz	10 V	Q	± 14 mV	± 16 mV	± 17 mV
100 V	1 kHz	100 V	Q	± 60 mV	± 80 mV	± 90 mV
100 V	50 kHz	100 V		± 140 mV	± 160 mV	± 170 mV
300 V	1 kHz	300 V		± 300 mV	± 420 mV	± 450 mV
300 V [1]	50 kHz	300 V		± 660 mV	± 780 mV	± 810 mV

1 Some calibrators may have difficulty driving the multimeter and cable load at this V-Hz output. Use short, low-capacitance cable to reduce calibration loading. Verification can be performed at >195 Vrms. New test limits can be computed from the accuracy specification shown in chapter 1 for the actual test conditions used.

Q = Quick performance verification test points.

CAUTION The 50 kHz ac voltage test points may fail performance verification if the internal shields have been removed and reinstalled. You must recalibrate the ac voltage function any time the multimeter's internal shields have been removed and reinstalled. Consult the "AC Voltage Gain Adjustment" to recalibrate the ac voltage function.

Connect the AC Standard across the multimeter HI and LO input terminals as shown in Figure 4-5.

1 Set up the multimeter as follows:

Reset the multimeter	*RST
Configure for AC voltage, 100mV	CONF:VOLT:AC 0.1
Select Slow AC filter	DET:BAND 3

2 Set the AC Standard output to 100 mV at 1 kHz.

3 Perform the measurement using the READ? command.

4 Verify the result is within specified limits and record the result.

5 Change ranges using VOLT:AC:RANG <range> and make a measurement for each ACV input and range shown in Table 4-3 verifying the result is within specified limits. Record the result.

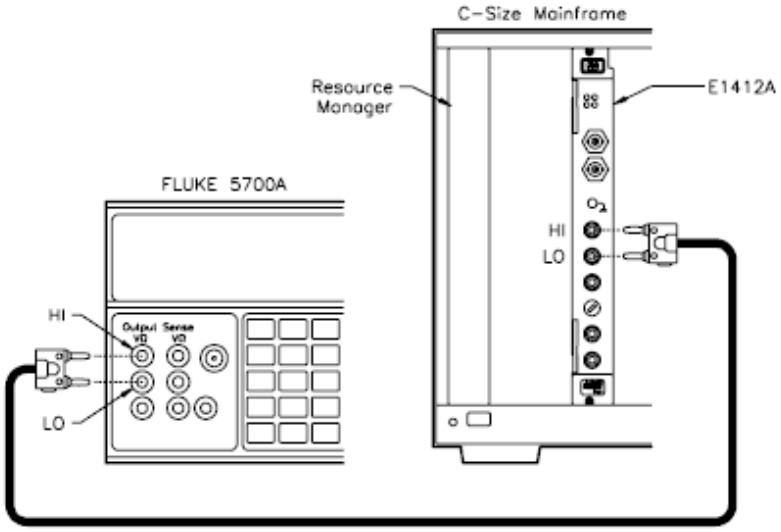

Figure 4-5 AC Voltage Gain Test Setup.

AC Current Gain Verification

Table 4-5 AC Current Gain Verification Tests

INPUT	INPUT FREQUENCY	Keysight E1412A Range	Error from nominal		
			24 hour	90 day	1 year
1 A	1 kHz	1 A	± 1.9 mA	± 1.9 mA	± 1.9 mA
2 A	1 kHz	3 A	± 16.8 mA	± 16.8 mA	± 16.8 mA

Connect the AC Standard across the multimter's I and LO input terminals as shown in Figure 4-6.

1. Set up the multimeter as follows:
   Reset multimeter *RST
   Configure for AC current (1 A) CONF:CURR:AC 1
   Select Slow AC filter DET:BAND 3
2. Set the AC Standard controls as follows: Output 1 A Frequency 1kHz
3. Perform the measurement using the READ? command.
4. Verify the result is within specifed limits and record the result.
5. Change ranges using CURR:AC:RANG <range> and make a measurement for each ACI input and range shown in Table 4-4 verifying the result is within specifed limits. Record the result.
6. Perform the measurement using the READ? command.
7. Verify that the result is within specified limits and record the result.

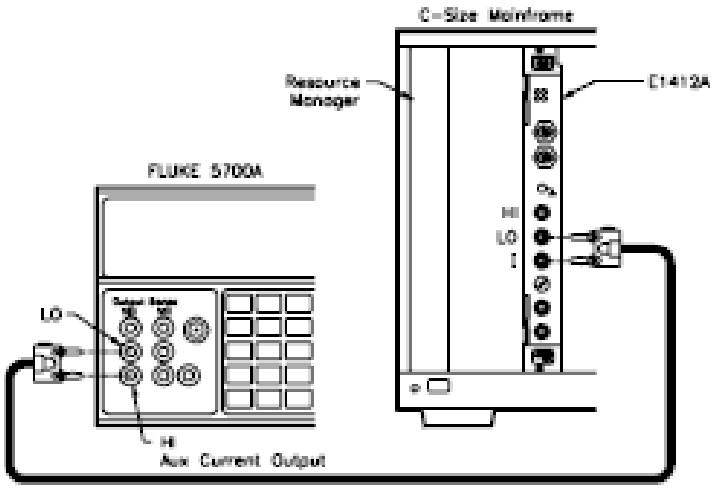

Figure 4-6 AC Current Gain Test Setup.

Frequency Gain Verification Test Procedure

Table 4-6 Frequency Verification Tests

INPUT FREQUENCY	INPUT Amplitude using a coaxial input cable	QUICK VERIFI-CATI ON	Keysight E1412A Range	Error from nominal		
				24 hour	90 day	1 year
100 Hz	10 mV		100 mV	± 0.06 Hz	± 0.1 Hz	± 0.1 Hz
100 kHz	1 V	Q	1 V	± 6 Hz	± 10 Hz	± 10 Hz

Q = Quick performance verification test points.

Connect the AC Standard across the multimeter's HI and LO input terminals as shown in Figure 4-7.

1. Set up the Keysight E1412A as follows:
   Reset multimeter *RST
   Configure for frequency CONF:FREQ
2. Set the AC Standard as follows:
   Output 10 mV
   Frequency 100 Hz
3. Set the multimeter to the 100 mVac range as follows: Set amplitude range, 100 mV FREQ:VOLT:RANG 0.1.
4. Perform the measurement using the READ? command.
5. Verify the result is within specified limits and record the result.
6. Change amplitude range using FREQ:VOLT:RANG <range> and make a measurement for the 1V, 100 kHz input shown in Table 4-5 verifying the result is within specified limits. Record the result.

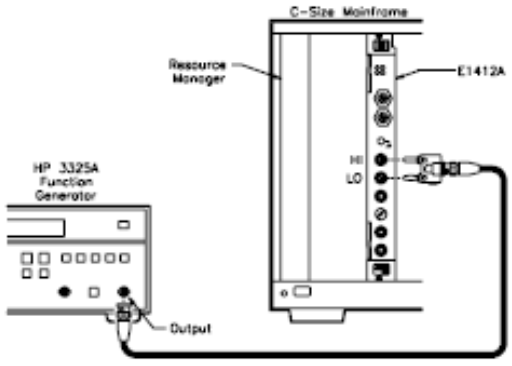

Figure 4-7 Frequency Test Setup

Optional AC Voltage Gain Verification

These tests are NOT intended to be performed with every calibration. This procedure is used to verify additional instrument AC voltage specifications.

Table 4-7 AC Voltage Gain Verification Tests

INPUT	INPUT FREQUENCY	Keysight E1412A Range	Error from nominal		
			24 hour	90 day	1 year
1 V	20 Hz	1 V	± 600 µV	± 800 µV	± 900 µV
1 V	1 kHz	1 V	± 600 µV	± 800 µV	± 900 µV
1 V	20 kHz	1 V	± 600 µV	± 800 µV	± 900 µV
1 V	50 kHz	1 V	± 1.4 mV	± 1.6 mV	± 1.7 mV
1 V	100 kHz	1 V	± 6.3 mV	± 6.8 mV	± 6.8 mV
1 V	300 kHz	1 V	± 55 mV	± 55 mV	± 55 mV
10 V	1 kHz	10 V	± 6 mV	± 8 mV	± 9 mV
1 V	1 kHz	10 V	± 2.4 mV	± 3.5 mV	± 3.6 mV
100 mV	1 kHz	10 V	± 12.04 mV	± 13.05 mV	± 13.06 mV

Connect the AC Standard across the multimeter's HI and LO input terminals as shown in Figure 4-5.

1 Set up the multimeter as follows:
Reset multimeter *RST
Configure for AC voltage CONF:VOLT:AC
Select Slow AC filter DET:BAND 3

2 Set the AC Standard controls as follows:
Output 1 V
Frequency 20 Hz

3 Set the multimeter to the 100 mV range using the following command:
Set range VOLT:RANG .1

4 Perform the measurement using the READ? command.

5 Verify the result is within specified limits and record the result.

6 Change amplitude range using VOLT:AC:RANG <range> and make a measurement for each ACV input and range shown in Table 4-6 verifying the result is within specified limits. Record the result.

Performance Test Record

Table 4-7, Performance Test Record for the Keysight E1412A Multimeter, is a form you can copy and use to record performance test results for the multimeter. This form shows the multimeter accuracy limits, the measurement uncertainty from the source and the test accuracy ratio (TAR).

NOTE **The accuracy, measurement uncertainty and TAR values shown in Table 4-6 are valid ONLY for the specific test conditions, test equipment and assumptions described. If you use different test equipment or change the test conditions, you will need to compute the specific values for your test setup.**

Multimeter Accuracy

Accuracy is defined for DC voltage, AC voltage, 2-wire ohms, 4-wire ohms, DC current, AC current and frequency measurements using the 1-year specifications in Appendix A. The "High Limit" and "Low Limit" columns represent the multimeter accuracy for the specified test conditions (reading and range).

Measurement Uncertainty

Measurement uncertainties listed in Table 4-7 are calculated assuming an Keysight 3325A/B as the source for frequency measurements and a Fluke 5700A/5725A for all other measurements. The uncertainties describe error you can expect from the source. These uncertainties are calculated from the 90-day accuracy specifications for the Fluke 5700A and the 1-year specification for the Keysight 3325A/B.

Test Accuracy Ratio (TAR)

The "Test Accuracy Ratio (TAR)" is calculated from (high limit - expected measurement)/measurement uncertainty. "N/A" means measurement uncertainty and TAR do not apply to the measurement. A small TAR indicates the uncertainty of the source signal starts to approach the multimeter's specification limit.

Table 4-8 Performance Test Record for the Keysight E1412A Multimeter.

Test Facility:_____

Name _____ Report No._____

Address _____ Date _____

City/State _____ Customer _____

Phone _____ Tested By _____

Model _____ Ambient temperature _____°C

Serial No. _____Relative humidity_____%

Firmware Rev. _____ Line frequency _____Hz (nominal) Special Notes:

Test Equipment Used: Model No. Trace No. Cal Due Date

1

2

3

4

5

Table 4-9 Keysight E1412A Multimeter Performance Test Record Date_____

Test Input	DMM Range	Low Limit	Measured Reading	High Limit	Meas Uncert	Test Acc Ratio
DC Voltage Zero Offset Test						
0	100 mV	-.0000035		.0000035	N/A	N/A
0	1V	-.000007		.000007	N/A	N/A
0	10V	-.000050		.000050	N/A	N/A
0	100V	-.000600		.000600	N/A	N/A
0	300V	-.009000		.009000	N/A	N/A
4-wire Ohms Zero Offset Test						
0	100 Ω	-.004		.004	N/A	N/A
0	1 kΩ	-.010		.010	N/A	N/A
0	10 kΩ	-.100		.100	N/A	N/A
0	100 kΩ	-1		1	N/A	N/A
0	1 MΩ	-10		10	N/A	N/A
0	10 MΩ	-100		100	N/A	N/A
0	100 MΩ	-10 k		10 k	N/A	N/A
2-wire Ohms Zero Offset Test						
0	100 Ω	-.004		.004	N/A	N/A
0	1 kΩ	-.010		.010	N/A	N/A
0	10 kΩ	-.100		.100	N/A	N/A
0	100 kΩ	-1		1	N/A	N/A
0	1 MΩ	-10		10	N/A	N/A
0	10 MΩ	-100		100	N/A	N/A
0	100 MΩ	-10 k		10 k	N/A	N/A
DC Current Zero Offset Test						
0	10 mA	-.000002		.000002	N/A	N/A
0	100 mA	-.000005		.000005	N/A	N/A
0	1A	-.000100		.000100	N/A	N/A
0	3A	-.000600		.000600	N/A	N/A

Table 4-10 Keysight E1412A Multimeter Performance Test Record Date_____

Test Input	DMM Range	Low Limit	Measured Reading	High Limit	Measure Uncertainty	Test Acc Ratio
DC Voltage Gain Test		(Vdc)		(Vdc)		
100 mV	100 mV	0.0999915		0.1000085	.0000015	6:1
1V	1V	0.9999530		1.000047	.0000072	7:1
10V	10V	9.999600		10.00040	.000054	7:1
-10V	10V	-9.999600		-10.00040	.000054	7:1
100V	100V	99.99490		100.0051	.00070	7:1
300V	300V	299.9775		300.0225	.00300	8:1
4-wire Ohms Gain Test		(Ohms)		(Ohms) see end of table NOTE		
100 Ω	100 Ω	99.9860		100.014	.0017	8:1
1 kΩ	1 kΩ	999.890		1000.110	.012	9:1
10 kΩ	10 kΩ	9998.90		10001.10	.110	10:1
100 kΩ	100 kΩ	99989.0		100011	1.3	8:1
1 MΩ	1 MΩ	999890.0		100110	18	6:1
10 MΩ	10 MΩ	9994500.0		10005500	370	>10:1
100 MΩ	100 MΩ	99190000.0		100810000	12000	<1:1
2-wire Ohms Gain Test		(Ohms)		(Ohms) see end of table NOTE		
100 Ω	100 Ω	99.9860		100.014	.0017	8:1
1 kΩ	1 kΩ	999.890		1000.110	.012	9:1
10 kΩ	10 kΩ	9998.90		10001.10	.110	10:1
100 kΩ	100 kΩ	99989.0		100011	1.3	8:1
1 MΩ	1 MΩ	999890.0		100110	18	6:1
10 MΩ	10 MΩ	9994500.0		10005500	370	>10:1
100 MΩ	100 MΩ	99190000.0		100810000	12000	<1:1
DC Current Gain Test		(Adc)		(Adc)		
10 mA	10 mA	0.009991		0.010009	.0000006	>10:1
100 mA	100 mA	0.099925		0.100075	.000006	>10:1
1A	1A	0.998400		1.001600	.00008	>10:1
2A	3A	1.985000		2.015000	.00016	>10:1

Table 4-11 Keysight E1412A Multimeter Performance Test Record Date_____

Test Input	DMM Range	Low Limit (Vac)	Measured Reading	High Limit (Vac)	Measure Uncert	Test Acc Ratio
AC Voltage Gain Test						
100 mV @ 1 kHz	100 mV	0.099900		0.100100	.00002	5:1
100 mV @ 50 kHz	100 mV	0.099830		0.100170	.000043	4:1
1V @ 1 kHz	1V	0.999100		1.000900	.000082	>10:1
1V @ 50 kHz	1V	0.998300		1.001700	.00015	>10:1
10V @ 1 kHz	10V	9.991000		10.00900	.00082	>10:1
10V @ 50 kHz	10V	9.983000		10.01700	.0015	>10:1
10V @ 10 Hz	10V	9.962000		10.03800	.0065	6:1
10 mV @ 1 kHz	100 mV	0.009954		0.010046	.0000071	6:1
100V @ 1 kHz	100V	99.91000		100.0900	.008001	>10:1
100V @ 50 kHz	100V	99.83000		100.1700	.05501	3:1
300V @ 1 kHz	300V	299.5500		300.4500	.024004	>10:1
300V @ 50 kHz	300V	299.1900		300.8100	.108011	8:1
Optional AC Voltage Gain Test						
1V @ 20 Hz	1V	0.99910		1.00090	.00065	1:1
1V @ 1 kHz	1V	0.99910		1.00090	.000082	>10:1
1V @ 20 kHz	1V	0.99910		1.00090	.000082	>10:1
1V @ 50 kHz	1V	0.99830		1.00170	.00015	>10:1
1V @ 100 kHz	1V	0.99320		1.00680	.00033	>10:1
1V @ 300 kHz	1V	0.94500		1.05500	.00059	>10:1
10V @ 1 kHz	10V	9.99100		10.0090	.00082	>10:1
1V @ 1 kHz	10V	0.99640		1.00360	.000082	<10:1
100 mV @ 1 kHz	10V	0.08694		0.11306	.00002	>10:1

NOTE The order of verification in this table follows the adjustment procedure. When you use the automated calibration programs provided, each calibration point is performance verified immediately following the adjustment. You can sequentially note the measured reading while the next adjustment is being made. The performance verification program also follows this test sequence.

Table 4-12 Keysight E1412A Multimeter Performance Test Record Date_____

Test Input	DMM Range	Low Limit (Amps)	Measured Reading	High Limit (Amps)	Meas Uncert	Test Acc Ratio
AC Current Gain Test						
1A @ 1 kHz	1A	0.998100		1.001900	.00065	3:1
2A @ 1 kHz	3A	1.983200		2.016800	.0013	>10:1

Table 4-13 Keysight E1412A Multimeter Performance Test Record Date_____

Test Input	DMM Range	Low Limit (Hz)	Measured Reading	High Limit (Hz)	Meas Uncert	Test Acc Ratio
Frequency Gain Test						
10 mV @ 100 Hz	100 mV	99.90		100.10	.0005	>10:1
1V @ 100 kHz	1V	99990		100010	.5	>10:1

NOTE

Measurement accuracy for resistance values applies to the Fluke 5700A displayed value NOT the nominal value. For example, a programmed output of 1000 Ω may actually output 1000.0231Ω. Therefore, you must use the actual displayed output value for true accuracy not the nominal value of 1000 or an additional error of 23 mΩ is introduced. The 24 hour specification for the 1kΩ range is 25 mΩ and the additional 23 mΩ nearly compromises the specification.

5 Adjustments

Introduction

This chapter contains procedures for adjusting the calibration constants in the Keysight E1412A multimeter. See the section titled "Calibration Interval" for recommendations on time intervals.

Closed-Cover Electronic Calibration

The Keysight E1412A Multimeter features closed-cover electronic calibration. There are no internal mechanical adjustments. The multimeter will measure the applied input when performing a range calibration, then calculate correction factors for the range based on this known input reference value. The new correction factors will be stored in non-volatile memory for use until the next time a calibration adjustment is performed. (The non-volatile memory does not change when power is turned off or after a remote interface reset.)

WARNING **Do not perform any of the following adjustments unless you are a qualified, service-trained technician, and have read the WARNINGS and CAUTIONS in Chapter 1 (and the Warnings and safety information preceding chapter 1).**

NOTE Adjustment procedures should be performed in the order shown in this manual.

Keysight Technologies Calibration Services

Contact your local Keysight Technologies Service Center for a low cost recalibration when your Multimeter is due for calibration. The Keysight E1412A Multimeter is supported on automated calibration systems which allow us to provide this service at competitive prices. Calibrations to MIL-STD-45662 are also available at competitive prices.

Calibration Interval

The Keysight E1412A Multimeter should be calibrated on a regular interval determined by the measurement accuracy requirements of your application. A 90 day interval is recommended for the most demanding applications, while a 1 year

or 2 year interval may be adequate for less demanding applications. Keysight does not recommend extending calibration intervals beyond 2 years in any application.

Whatever calibration interval you select, Keysight recommends that complete re-adjustment should always be performed at the calibration interval. This will increase your confidence that the Keysight E1412A will remain in specification for the next calibration interval. This criteria for readjustment provides the best measure of the multimeter's long-term stability. Performance data measured this way can easily be used to extend future calibration intervals.

Automating Adjustment Procedures

The Keysight E1412A Multimeter can be automatically adjusted under computer control. With computer control, you can perform the complete adjustment procedure and performance verification tests in less than 30 minutes. You will require a programmable multifuction calibrator to do this. The multimeter is configured to the required function and range using SCPI commands. The calibration value is programmed into the calibrator and sent to the multimeter. The adjustment procedure is initiated over the remote interface. The multimeter must be unsecured prior to initiating the adjustment procedure.

CALibration Command Summary

See the end of this chapter for a reprint of the CALibration command from the SCPI Command Reference of Chapter 3, Keysight E1412A User's Manual and SCPI Programming Guide.

Calibration Security Code

This feature allows you to enter a security code (electronic key) to prevent accidental or unauthorized calibrations of the multimeter. Your multimeter is secured when you first receive it. You MUST unsecure the multimeter by entering the correct security code before you can adjust calibration constants. You unsecure the multimeter with the following command:

```
CAL:SEC:STAT OFF, <security code>
```

- The security code is set to "HP_E1412" for the C-size multimeter when it is shipped from the factory.
- The security code is stored in non-volatile memory and does not change when power is turned off or following a remote interface reset (*RST).
- The security code can contain up to 12 characters.
- IF YOU FORGET your security code, you can disable the security feature momentarily by the procedure that follows titled "Unsecuring the Multimeter Without the Security Code".

Check Calibration Security State

The current state of calibration security can be found by using the CAL:SEC:STAT? command. A '1' is returned if calibration security is enabled, and a '0' is returned if calibration security is disabled.

Example

This example checks calibration security status.

```
10 OUTPUT 70903;"CAL:SEC:STAT?" Query cal security state Security State
20 ENTER 70903;A
30 PRINT A
40 END
```

Changing the Security Code

The security code can be changed with the following procedure. The security code can contain up to 12 characters.

1. Disable calibration security:

   ```
   CAL:SEC:STAT OFF, <security code>
   ```

   where <security code> = the current active security code

2. Set a new security code:

   ```
   CAL:SEC:CODE <security code>
   ```

   where <security code> = new security code of up to 12 characters

3. Enable calibration security:

   ```
   CAL:SEC:STAT ON, <security code>
   ```

Example

The following multimeter SCPI commands change the security code from 'HP_E1412' to 'MYCODE1234'.

```
*RST                                Resets the multimeter
CAL:SEC:STAT OFF,HP_E1412           Disable cal security
CAL:SEC:CODE MYCODE1234           Change code
CAL:SEC:STAT ON,MYCODE1234      Enable cal security
```

Unsecuring the Multimeter Without the Security Code

This procedure shows you how to unsecure the multimeter without the correct security code. See "ESD Precautions" before beginning this procedure.

1. Remove power from the mainframe.
2. Disconnect all inputs to the Multimeter and remove the module from the mainframe.
3. Remove the module's top and bottom shields by removing the eight torx screws (see Figure 8-2).
4. Short the two pins labeled JM500 by applying a jumper between the pins (see Figure 5-1).
5. Carefully reinstall the Multimeter into the mainframe.
6. Reapply power to the mainframe.
7. Execute the following commands: Execute CAL:SEC:STAT OFF <code> (<code> can now be anything). Execute CAL:SEC:CODE <newcode> (where "newcode" is a code you choose and now is the new security code). The multimeter is now unsecured.
8. Remove power from the mainframe.
9. Remove the Multimeter module from the mainframe.
10. Remove the jumper shorting the JM500 pins.
11. Reinstall the module shields.
12. Reinstall the multimeter in the mainframe and reapply power.

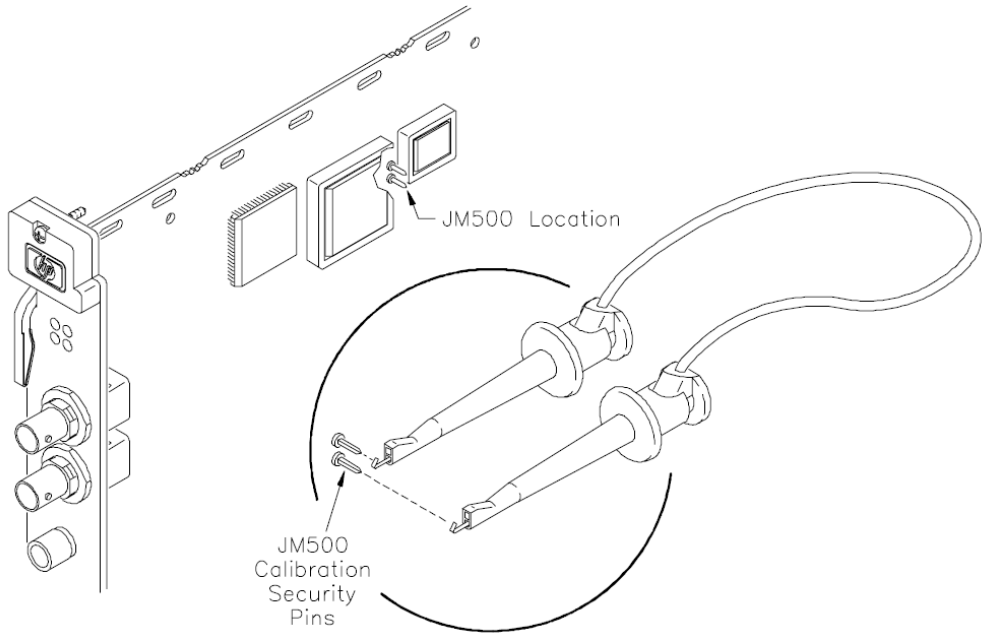

Figure 5-1 Overriding Calibration Security

Calibration Count (CAL:COUNt?)

The CAL:COUN? command provides you with a method of monitoring the number of times your multimeter has been calibrated. You can determine whether an unauthorized calibration has been performed by monitoring the calibration count. The instrument will respond to the CAL:COUN? command by returning the number of calibration RAM entries completed since factory initialization. The calibration number increments for each adjustment point and a complete calibration of the multimeter increases the calibration count value by several counts.

- The calibration count is stored in non-volatile memory and does not change when power has been off or after a remote interface reset.
- The calibration count increments up to a maximum of 32,767 after which it wraps around to 0.
- You cannot program or reset the calibration count value. It is an independent electronic calibration "serialization" value.
- Your multimeter was calibrated before it left the factory. Read the calibration count to determine its initial value upon receipt.

Calibration Message

You can store a message of up to 40 characters using the CAL:STRing command from the remote interface. The message is readable from the remote interface using the CAL:STRing? command. The calibration message is stored in secured calibration memory (the multimeter must be unsecured to change the calibration message).

The calibration message can be used to store messages like the calibration date, the next calibration due date or an encoded version of the instrument's calibration secure code.

Aborting an Adjustment in Progress

Sometimes it becomes necessary to abort an adjustment once the procedure has been initiated. Issuing a remote interface device clear command will abort the adjustment in progress.

CAUTION **Never turn off mainframe power while the multimeter is making an adjustment. If power is removed during a zero adjustment, ALL calibration memory may be lost. If power is removed during any gain adjustment, calibration memory for the function being adjusted may be lost.**

Adjustment Procedures

Adjustment Conditions

See Table 4-1, *Recommended Test Equipment*, for test equipment requirements. For optimum performance, all adjustment procedures should comply with following test conditions:

- Ambient temperature of the test area is between 18°C and 28°C and stable to within ±1°C.
- Ambient relative humidity of the test area is <80%.
- Must have a two hour warm-up with all input signals removed.
- Use only copper connections to minimize thermal offset voltages.
- Shielded twisted PTFE insulated cable or other high impedance, low dielectric absorption cable is recommended for all measurements.
- Keep cables as short as possible. Long test leads can act as an antenna causing the pick-up of ac signals and contributing to measurement error.
- Allow 5 minutes after handling input connections for thermal offset voltage settling.
- For effective normal mode rejection (NMR), you must programmatically set the proper power line frequency reference if you are not on a 60 Hz system (e.g, 50 Hz or 400 Hz). The Keysight E1412A default is 60 Hz at power-on and must be set to 50 Hz or 400 Hz if required using the CAL:LFR command.

General Procedure

Before beginning any adjustment procedure, the multimeter MUST be in an "UNSECURED" state. For assistance on how to accomplish this, see "Calibration Security Code" earlier in this chapter. Each adjustment should be followed by a performance verification test for added confidence. We recommend the following general procedure always be followed.

- UNSECURE the multimeter as outlined in the “Calibration Security Code” section.
- Perform the Zero Adjustment Procedure.
- Perform the desired Gain Adjustment Procedure(s).
- SECURE the multimeter and note the new calibration count in your maintenance records. Also note any new secure code used.
- Perform the Performance Verification Tests.

CAUTION ORDER OF ADJUSTMENTS REQUIREMENT Adjustments for each function MUST be performed in the order given in the function's adjustment table. An accurate adjustment requires the adjustments prior to the one in progress be within specification. See the function's table of adjustments for the order of adjustments.

CAUTION ZERO ADJUSTMENT REQUIREMENT The zero adjustment must be a recent adjustment prior to performing any other gain adjustment. It is recommended you perform the zero adjustment one time just before performing the other gain adjustments.

CAUTION AC VOLTAGE GAIN ADJUSTMENT REQUIREMENT AC voltage gain calibration constants are dependent on a prior calibration of the DC voltage function. You must have adjusted the DC voltage function prior to adjusting the AC voltage function. Failure to do so can cause significant calibration errors in the AC voltage function.

Zero Adjustment

This procedure sets the zero calibration constants for each multimeter function and range. The multimeter stores a new set of offset correction constants for every measurement function and range each time this procedure is executed. The multimeter will sequence through all required functions and ranges automatically and store new zero offset calibration constants. ALL offset corrections are determined automatically. *You may not correct a range or function individually because the zero adjustment re-enters ALL zero offset correction constants automatically.* This feature is intended to save calibration time and improve zero calibration consistency.

1. Connect a 4-wire low thermal short across the HI and LO input terminals and HI and LO Sense terminals of the Keysight E1412A (Figure 5-2).
2. Reset the Keysight E1412A multimeter by executing a *RST command.
3. Prepare the Keysight E1412A for calibration:
   - Enable CAL ..... CAL:SEC:STAT OFF, <security code>
   - Send input CAL value ..... CAL:VAL 0
4. Check to see if the last command has been completed using the *OPC? command. Read the result; a 1 indicates that the operation has been completed.
5. Perform the adjustment by sending the CAL? command and reading the result.

- A zero indicates that the adjustment was accepted.
- A non-zero result indicates that an error has occurred. Send the SYST:ERR? command and read the result. See Chapter 5 of the *E1412A User's Manual and SCPI Programmer's Guide* for details.

CAUTION Do not remove power from the mainframe during the multimeter's Zero Adjustment. You may lose ALL calibration memory if power is removed while the multimeter is adjusting.

NOTE The automatic zero adjustment procedure takes about 5 minutes to complete.

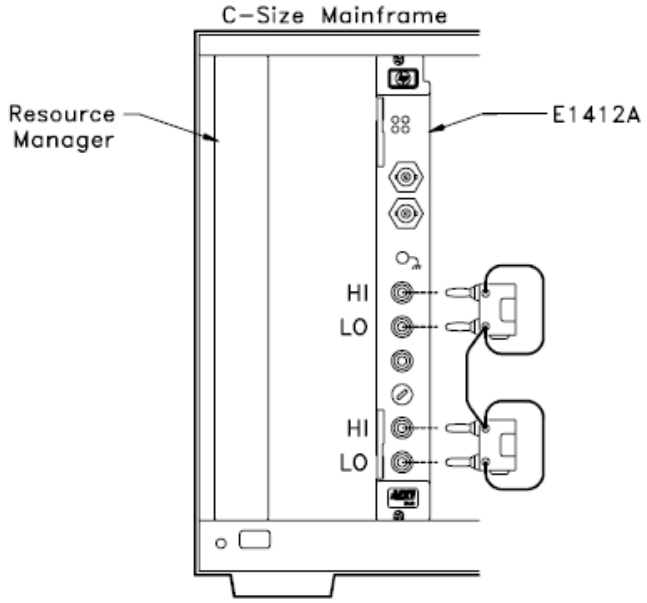

Figure 5-2 Zero Adjustment Test Setup.

DC Voltage Gain Adjustment

NOTE: The zero adjustment procedure MUST have been recently performed prior to beginning any gain adjustment procedure. Zero adjustment should be performed one time followed by the other gain adjustments.

1. Connect the DC Standard output across the HI and LO terminals of the Keysight E1412A as shown in Figure 5-3.
2. Set up the Keysight E1412A as follows:
   - Reset the multimeter ..... *RST (*RST puts the multimeter in the VOLT:DC function)
3. Set the DC Standard output to 100 mV for the first DCV adjustment.
4. Prepare the Keysight E1412A for calibration:
   - Set the DCV range ..... VOLT:RANGE 100E-3
   - Enable cal ..... CAL:SEC:STAT OFF, <security code>
   - Send input value ..... CAL:VAL <input voltage>

     (see the following DC Voltage Function Adjustment Points table for <input voltage> values)
5. Check to see if the last command has been completed using the *OPC? command. Read the result; a 1 indicates that the operation has been completed.
6. Perform the adjustment by sending the CAL? command and reading the result.
   - A zero indicates that the adjustment was accepted.
   - A non-zero result indicates that an error has occurred. Send the SYST:ERR? command and read the result. See Chapter 5 of the *Keysight E1412A User's Manual and SCPI Programmer's Guide* for details.

NOTE Each range in the gain adjustment procedure takes less than 20 seconds to complete.

7 Repeat steps 3 through 6 for the ranges and inputs given in the following table.

DC Voltage Function Adjustment Points	
Keysight E1412A Range	DC Standard Output[1]
100 mV	100 mV
1 V	1 V
10 V	10 V
100 V	100 V
300 V	300 V

1 Valid calibration input values sent to the multimeter are 0.9 to 1.1 of Full Scale for the range being adjusted (270V to 300V for the 300V range). The <input voltage> parameter of the CAL:VAL command must equal the actual input value. For example, if you input 0.9V to calibrate the 1V range, you send CAL:VAL 0.9 to the multimeter prior to CAL?.

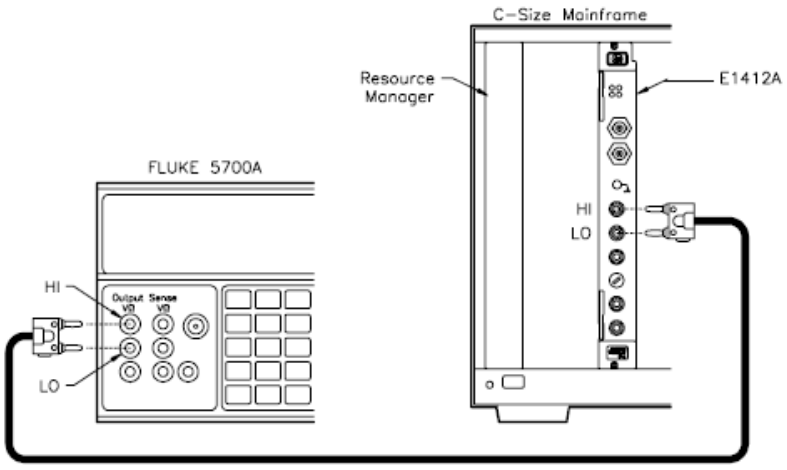

Figure 5-3 DC Voltage Gain Adjustment Setup.

4-Wire Ohms Gain Adjustment

NOTE **The zero adjustment procedure MUST have been recently performed prior to beginning any gain adjustment procedure. Zero adjustment should be performed one time followed by the other gain adjustments.**

This procedure sets the 4-wire ohms gain calibration constants for each range. A new gain constant is ALSO stored for the corresponding 2-wire ohms range. It is not necessary, but you can adjust the 2-wire ohms function separately AFTER the 4-wire ohms gain calibration is complete. The automated calibration programs supplied with this service manual do not make 2-wire ohms adjustments. The adjustments should be performed in the order given starting at the 100Ω range and proceeding to the 10MΩ range (there is no adjustment of the 100MΩ range).

This procedure can be performed without using a transfer standard DMM.

1. Set up the Keysight E1412A as follows:
   - Reset the multimeter ..... *RST
   - Set the function ..... FUNC "FRES"
   - Set trigger delay ..... TRIG:DEL .5
2. Set the Resistance Standard output to 100Ω for the first adjustment point. Note the exact output resistance from the calibrator for input in the CAL:VAL command (if the transfer standard is not used).
3. Measure the output of the Resistance Standard with the Transfer Standard DMM as shown in Figure 5-4(a) (optional). The Transfer Standard settings (offset compensation, auto-zero, etc.) and guarding should be identical to those used for the Keysight E1412A.
4. If used, disconnect the Transfer Standard. Using the same test leads, connect the Resistance Standard output to the terminals of the E1412A as shown in Figure 5-4(b).
5. Prepare the Keysight E1412A for adjustment:
   - Set the range to 100 Ω.....FRES:RANG 100
   - Enable cal.....CAL:SEC:STAT OFF,<security code>
   - Send input value ..... CAL:VAL <resistance>
     (see the following Resistance Function Adjustment Points table for <resistance> values)
6. Check to see if the last command has been completed using the *OPC? command. Read the result; a 1 indicates that the operation has been completed.

7 Perform the adjustment by sending the CAL? command and read the calibration result.

- A zero indicates that the adjustment was accepted.
- A non-zero result indicates that an error has occurred. Send the SYST:ERR? command and read the result. See Chapter 5 of the *Keysight E1412A User's Manual and SCPI Programmer's Guide* for details.

NOTE Each range in the gain adjustment procedure takes less than 20 seconds to complete.

8 Repeat steps 2 through 7 for the ranges and inputs given below.

4-wire Ohms Resistance Function Adjustment Points (these adjustments also store a 2-wire cal constant)	
Keysight E1412A Range	Resistance Standard Output[1]
100 Ω	100 Ω
1 kΩ	1 kΩ
10 kΩ	10 kΩ
100 kΩ	100 kΩ
1 MΩ	1 MΩ
10 MΩ	10 MΩ
100 MΩ **	**NOT AN ADJUSTMENT POINT

1 Valid calibration input values sent to the multimeter are 0.9 to 1.1 of Full Scale for the range being adjusted. 100 MΩ is NOT an adjustment point.

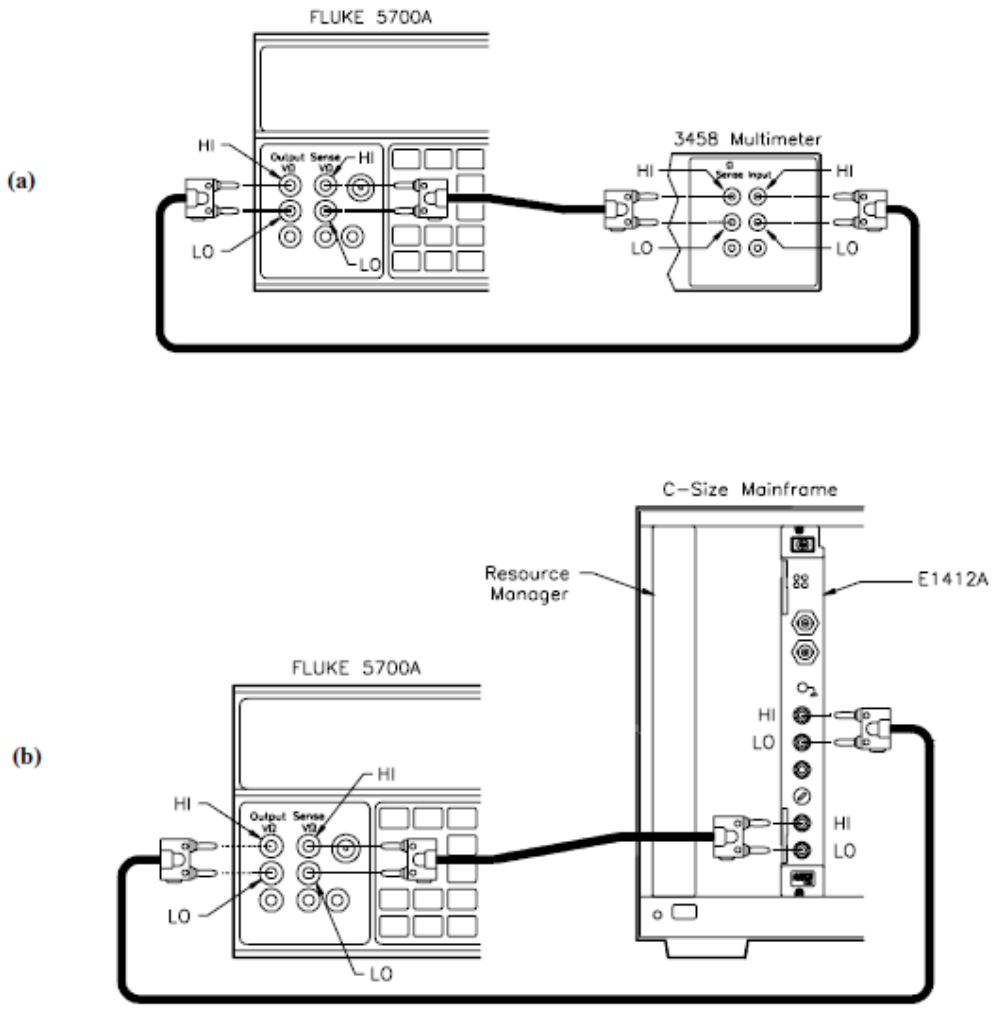

Figure 5-4 4-Wire Ohms Gain Adjustment Setup

2-Wire Ohms Gain Adjustment

It is recommended you performance verify the 2-wire ohms function ranges for performance within specification before making 2-wire ohms gain adjustments. 2-wire ohms gain adjustments are automatically made for each range when the 4-wire adjustments are performed. However, you can make individual 2-wire ohms adjustments following the 4-wire ohms adjustment if you desire. Simply repeat the procedure given for the 4-wire ohms adjustments using Figures 5-5a and 5-5b while configured for the 2-wire ohms function (CONF:RES) and change ranges using RES:RANG.

Test Lead Resistance

You must characterize your test lead resistance and add this to the input resistance value when doing a 2-wire ohms adjustment. Test lead resistance can add an significant amount of error to the adjustment if not accounted for.

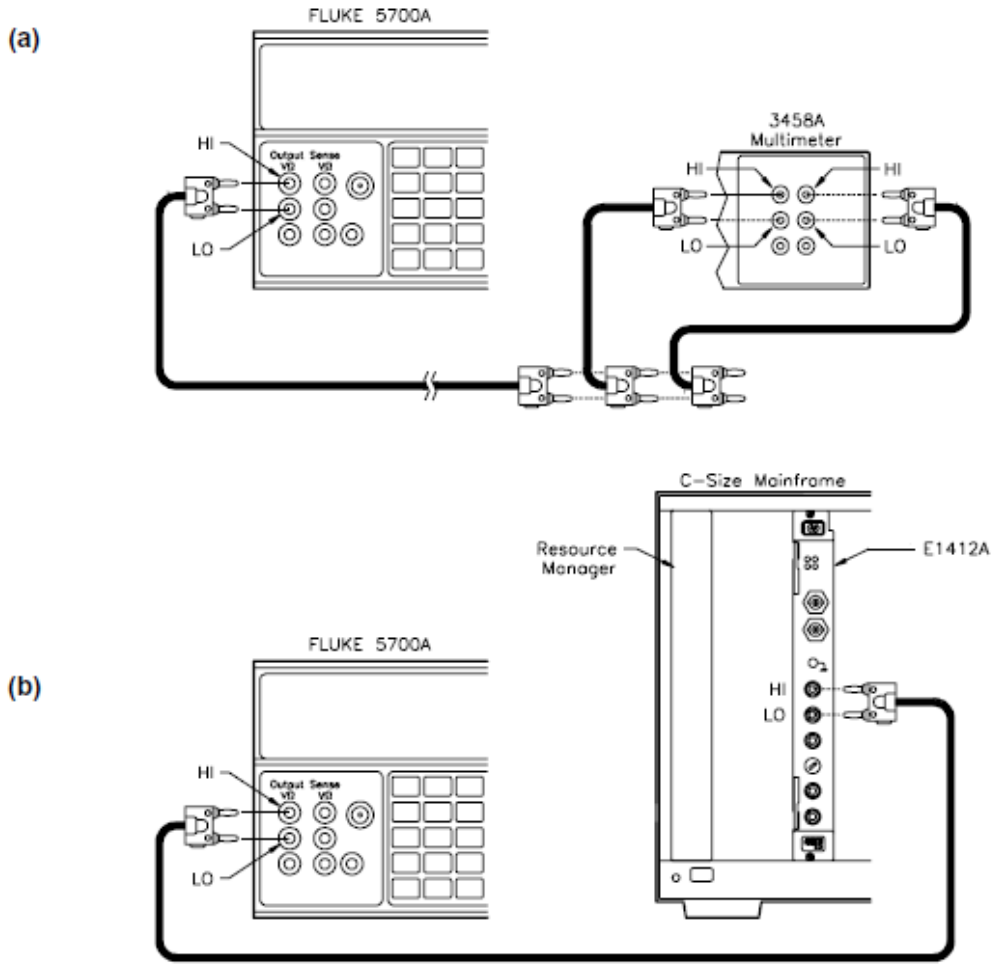

Figure 5-5 2-Wire Ohms Gain Adjustment Setup

DC Current Gain Adjustment

NOTE: The zero adjustment procedure MUST have been recently performed prior to beginning any gain adjustment procedure. Zero adjustment should be performed one time followed by the other gain adjustments.

This procedure sets the DC current gain calibration constants for each range. The adjustments should be made in the order given.

1. Connect the DC Standard current output across the I and LO terminals of the Keysight E1412A as shown in Figure 5-6.
2. Set up the Keysight E1412A as follows:
   - Reset the multimeter ..... *RST
   - Set the function ..... CONF:CURR:DC
3. Set the DC Standard output to 10 mA for the first DCI adjustment.
4. Prepare the Keysight E1412A for calibration:
   - Set the DCI range ..... CURR:RANGE 10E-3
   - Enable cal ..... CAL:SEC:STAT OFF, <security code>
   - Send input value ..... CAL:VAL <input current> (see the following DC Current Function Adjustment Points table for <input current> values)
5. Check to see if the last command has been completed using the *OPC? command. Read the result; a 1 indicates that the operation has been completed.
6. Perform the adjustment by sending the CAL? command and reading the result.
   - A zero indicates that the adjustment was accepted.
   - A non-zero result indicates that an error has occurred. Send the SYST:ERR? command and read the result. See Chapter 5 of the *Keysight E1412A User's Manual and SCPI Programmer's Guide* for details.

NOTE **Each range in the gain adjustment procedure takes less than 20 seconds to complete.**

7 Repeat steps 3 through 6 for the ranges and inputs given in the following table.

DC Current Function Adjustment Points	
Keysight E1412A Range	DC Standard Output[1]
10 mA	10 mA
100 mA	100 mA
1 A	1 A
3 A	3 A

1 Valid calibration input values are 0.9 to 1.1 of Full Scale of the range to be adjusted (9mA to 2A for the 3A range). For best results, set the calibration value to full-scale (except the 3A range).

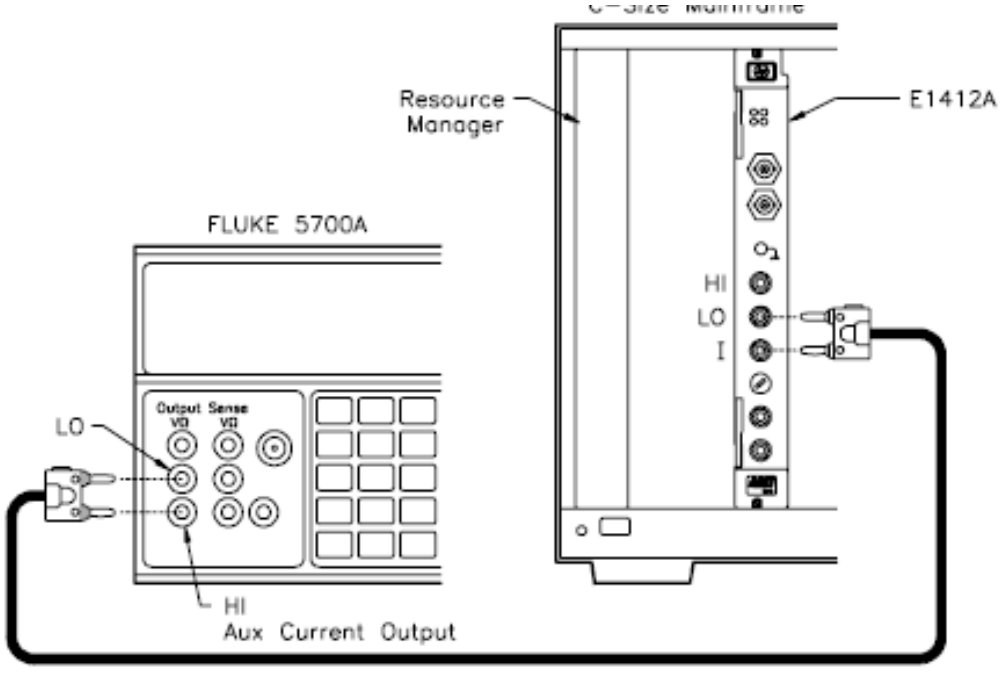

Figure 5-6 DC Current Gain Adjustment Setup.

AC Voltage Gain

NOTE: The zero adjustment procedure MUST have been recently performed prior to beginning any gain adjustment procedure. Zero adjustment should be performed one time followed by the other gain adjustments.

CAUTION **AC VOLTAGE GAIN ADJUSTMENT REQUIREMENT** AC voltage gain calibration constants are dependent on a prior calibration of the DC voltage function. You must have adjusted the DC voltage function prior to adjusting the AC voltage function. Failure to do so can cause significant calibration errors in the AC voltage function.

This procedure sets the AC voltage gain calibration constants for each ACV range. The adjustments should be performed in the order given in the following table "AC Voltage Function Adjustment Points".

1. Connect the AC Standard output across the HI and LO terminals of the Keysight E1412A as shown in Figure 5-3.
2. Set up the Keysight E1412A as follows:
   - Reset the multimeter ..... *RST
   - Set the function ..... FUNC:VOLT:AC
   - Set the SLOW AC filter ..... DET:BAND 3
3. Set the AC Standard output to 100 mV at 1 kHz for the first adjustment point.
4. Prepare the Keysight E1412A for calibration:
   - Set the range ..... VOLT:RANG 100E-3
   - Enable cal ..... CAL:SEC:STAT OFF,<security code>
   - Send input value .....CAL:VAL <input voltage> (see the following AC Voltage Function Adjustment Points table for <input voltage> values)
5. Check to see if the last command has been completed using the *OPC? command. Read the result; a 1 indicates that the operation has been completed.
6. Perform the adjustment by sending the CAL? command and reading the result.
   - A zero indicates that the adjustment was accepted.
   - A non-zero result indicates that an error has occurred. Send the SYST:ERR? command and read the result. See Chapter 5 of the *Keysight E1412A User's Manual and SCPI Programmer's Guide* for details.

NOTE Each range in the gain adjustment procedure takes less than 20 seconds to complete.

7 Repeat steps 3 through 6 for the ranges and inputs given below.

AC Voltage Function Adjustment Points (must set SLOW AC filter; DET:BAND 3)		
Keysight E1412A Range	AC Standard Output[1]	
	Voltage	Frequency
100 mV	100 mV	1 kHz 50 kHz
1 V	1 V	1 kHz 50 kHz
10 V	10 V	1 kHz 50 kHz 10 Hz
100 mV	10 mV (1/10th full scale)	1 kHz
100 V	100 V	1 kHz 50 kHz
300 V	300 V	1 kHz 50 kHz

1 Calibration values sent to the multimeter should meet the following conditions:

- Valid calibration input values are 0.9 to 1.1 of Full Scale of the range to be adjusted (195V to 300V for the 300V range). For best results, set the calibration value to full-scale.
- The source frequency should be 1 kHz ±100 Hz (900 Hz to 1100 Hz) for 1 kHz adjustments, 45 kHz to 100 kHz for the 50 kHz adjustments and 10 Hz ±1 Hz (9 Hz to 11 Hz) for the 10 Hz adjustment.

AC Current Gain Verification

There are NO AC Current gain adjustments.

NOTE **The calibration program provides an option for doing a performance verification test on AC current so all functions can be verified within the calibration program.**

Frequency Gain Adjustment

NOTE: The zero adjustment procedure MUST have been recently performed prior to beginning any gain adjustment procedure. Zero adjustment should be performed one time followed by the other gain adjustments.

This procedure sets the frequency calibration constant for the multimeter and consists of only one adjustment point.

1. Connect the Frequency Standard output across the HI and LO terminals of the Keysight E1412A as shown in Figure 5-7.
2. Set the Frequency Standard as follows:
   - Set the voltage ..... 1 V sine wave
   - Set the frequency ..... 100 kHz

NOTE **Other input frequencies and voltages may be used. The input must be >100 mV and the frequency can be between 1 kHz and 100 kHz.**

3. Set up the Keysight E1412A as follows:
   - Reset the multimeter ..... *RST
   - Set the function ..... CONF:FREQ
4. Prepare the Keysight E1412A for adjustment using the following commands:
   - Set the range to 3 V .....FREQ:VOLT:RANGE 1
   - Enable cal ..... CAL:SEC:STAT OFF,<security code>
   - Send input value ..... CAL:VAL <frequency> (see the following Frequency Function Adjustment Point table for <frequency> value)
5. Check to see if the last command has been completed using the *OPC? command. Read the result; a 1 indicates that the operation has been completed.
6. Perform the adjustment by sending the CAL? command and reading the result.
   - A zero indicates that the adjustment was accepted.

- A non-zero result indicates that an error has occurred. Send the SYST:ERR? command and read the result. See Chapter 5 of the *Keysight E1412A User's Manual and SCPI Programmer's Guide* for details.

Frequency Function Adjustment Point	
Keysight E1412A Range (set with FREQ:VOLT:AC:RANG)	Frequency Standard Output[1]
1 V	1V @ 100 kHz

1 Valid calibration value sent to the multimeter is any input with amplitude >100mV rms and frequency of 1 kHz to 100 kHz.

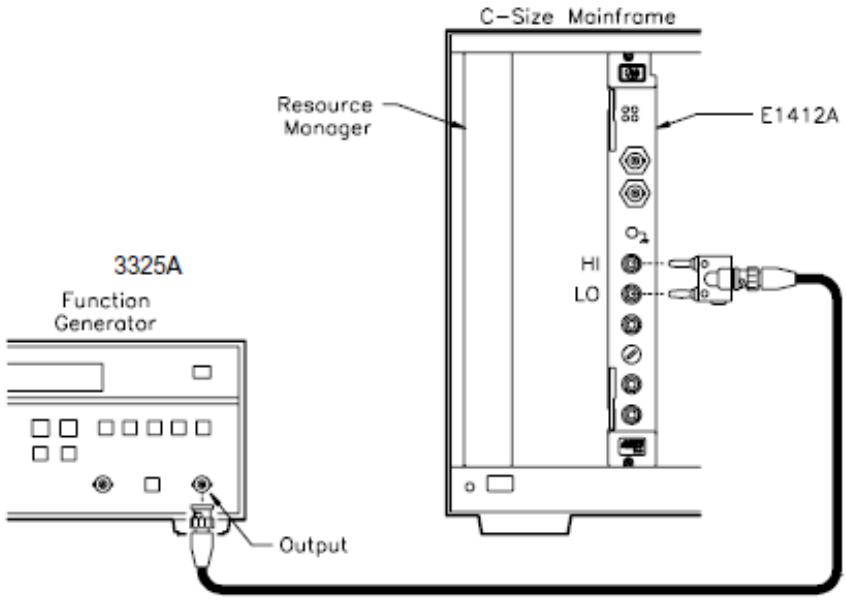

Figure 5-7 Frequency Adjustment Setup

CALibration Command Summary

The CALibration command subsystem allows you to enter a security code to prevent accidental or unauthorized calibrations of the multimeter. When

you first receive your multimeter, it is secured. You must unsecure it by entering the correct security code before you can calibrate the multimeter (see CALibration:SECure:STATe OFF|ON <code> command).

Subsystem Syntax

```
CALibration
   :COUNt?
   :LFRequency 50 | 60 | 400
   :LFRequency? [MIN | MAX]
   :SECure:CODE < new code>
   :SECure:STATe OFF | ON,<code>
   :SECure:STATe?
   :STRing <quoted string>
   :STRing?
   :VALue <cal_value>
   :VALue?
   :ZERO:AUTO ON | OFF
   :ZERO:AUTO?
```

:COUNt?

CALibration:COUNt? queries the multimeter to determine the number of times a point calibration has occurred. A complete calibration of the multimeter increases the count by the number of points calibrated. It is not a record of complete calibrations. The count is stored in non-volatile memory.

Comments

*RST does not change the calibration count stored in non-volatile memory.

Example

Querying the number of occurrences of point calibrations:

```
CAL:COUN   Query the calibration count.
```

:LFRequency

CALibration:LFRequency 50 | 60 | 400 sets the line frequency to either 50 Hz or 60 Hz.

Comments

- The wrong line frequency setting will cause reading errors to occur.

- You must execute the CAL:LFR command with a parameter of 50 or400 to change the line frequency setting to 50 Hz. Specifying 400Hz sets line frequency to 50 Hz since 400 is an even multiple of 50.

Default Setting: 60 Hz

***RST** does not change the line frequency setting.

Example

Setting the line frequency to 50 Hz:

```
CAL:LFR  50   Change the line frequency.
```

:LFRequency?

CALibration:LFRequency? queries the line frequency setting.

Comments

This command returns +50 for line frequency set to 400 because 400 is an even multiple of 50.

Example

Query the line frequency setting:

```
CAL:LFR?   Query the line frequency.
```

:SECure:CODE

CALibration:SECure:CODE <new code> enters a new calibration security code. To change the security code, first unsecure the multimeter using the old security code with :SEC:STAT OFF, <old code>. Then, enter the new code. The calibration security code may contain up to 12 characters. The security code is stored in non-volatile memory.

Comments

- The security code is set to "HP_E1412" when the multimeter is shipped from the factory. The security code is stored in non-volatile memory, and does not change when power has been off or after a remote interface reset.
- The security code <new code> can contain up to 12 alphanumeric characters. The first character must be a letter. The remaining characters can be letters or numbers or an underscore. You do not have to use all 12 characters but the first character must be a letter.
- If you forget or lose the active security code, you can disable the security feature by adding a jumper inside the multimeter (see Chapter 5 in the Service Manual). You then enter a new code and remove the jumper.

Example

Enter a new calibration security code:

```
CAL:SEC:STAT  OFF,  HP_E1412          Unsecure with the old code.
CAL:SEC:CODE  the_new_code           Enter a new calibration code
                                     (a maximum of 12 characters).
```

:SECure:STATe

CALibration:SECure:STATe OFF|ON, <code> unsecures or secures the multimeter for calibration. The calibration code must be the code set by the CAL:SEC:CODE command. The state is stored in non-volatile memory.

Parameters

Parameter Name	Parameter Type	Range of Values	Default Units
OFF|ON	boolean	OFF | 0 | ON | 1	none
code	discrete	up to 12 characters set by :SEC:CODE	none

Comments

- You can substitute decimal values for the OFF (“ 0”) and ON (“ 1”) parameters.
- The multimeter calibration is secured when shipped from the factory. The security code is set to "HP_E1412".

***RST** does not change the state.

Example

Set the calibration state to unsecured:

```
CAL:SEC:STAT  OFF,  HP_E1412    Unsecure multimeter calibration.
```

:SECure:STATe?

CALibration:SECure:STATe? returns a "1" or "0" to show whether the calibration security state is enabled (1) or disabled (0). The number is sent to the output buffer.

Example

Query the calibration security state:

```
CAL:SEC:STAT?        Query multimeter calibration security state
enter statement      Enter value into computer.
```

:STRing

CALibration:STRing <quoted string> allows you to record calibration information about your multimeter while CAL:SEC:STAT is OFF. For example, you can store information such as the last calibration date and/or the next calibration due date. The calibration message can contain up to 40 characters. Characters in excess of 40 are truncated and no error is generated. The string is stored in non-volatile memory.

Parameters

Parameter Name	Parameter Type	Range of Values	Default Units
<quoted string>	discrete	alphanumeric	none

Comments

- The calibration message can contain up to 40 characters.
- Calibration security state must be OFF to store a string.
- The calibration message is stored in non-volatile memory and does not change when power has been off or after a remote interface reset.

Example

Enter calibration information to record the next calibration date:

```
CAL:STR  'Cal 4/4/YY, Due 10/4/YY'     Enter a calibration
                                    message to record the
                                    caldate of April 4 and next
                                    cal due date as October 4
                                    (YY= year of due date).
```

:STRing?

CALibration:STRing? queries the calibration message and returns a quoted string (or a null string " " if nothing is present).

Example

Query the calibration message:

```
CAL:STR?              Query the calibration message.
enter statement       Enter value into computer.
```

:VALue

CALibration:VALue <cal_value> specifies the value of the known calibration signal used by the calibration procedure. *See the Keysight E1412A Service Manual, Chapter 5 "Adjustments", for a more detailed description* of the multimeter's calibration/adjustment procedures.

Parameters

Parameter Name	Parameter Type	Range of Values	Default Units
<cal_value>	numeric	see service manual	none

Comment

***RST** does not affect the calibration value.

Example

Enter the known value for the calibration source signal:

```
CAL:VAL  10.0          Enter calibration value .
```

:VALue?

CALibration:VALue? queries the present calibration value.

Example

Query the calibration value:

```
CAL:VAL?          Query the calibration value.
enter statement   Enter value into computer.
```

:ZERO:AUTO

CALibrate:ZERO:AUTO <mode> enables or disables the autozero mode. Auto zero applies to dc voltage, dc current and 2-wire ohms measurements only. 4-wire ohms and dc voltage ratio measurements automatically enable the autozero mode.

Parameters

Parameter Name	ParameterType	Range of Values	Default Units
mode	boolean	OFF | 0 | ON |1| ONCE	none

Comments

- You can use "0" for OFF and "1" for ON in the mode parameter.
- The ON parameter enables autozero. This is the default parameter which causes the multimeter to internally disconnect the input signal following each measurement and make a zero measurement. The zero reading is subtracted from the input signal reading to prevent offset voltages present on the multimeter's input circuitry from affecting measurement accuracy.
- The OFF parameter disables autozero. In this mode the multimeter takes one zero measurement and subtracts it from all subsequent input signal measurements prior to a change in function, range or integration time. A new zero measurement is made following a change in function, range or integration time. This mode increases measurement speed because a zero measurement is not made for each input signal measurement.
- Autozero ONCE issues an immediate zero measurement and can be used to get an update on the zero measurement for a specific input signal measurement. This helps to increase measurement speed since you update the zero reading without making zero measurements for every measurement.
- ***RST** Condition: CALibrate:ZERO:AUTO ON (autozero enabled)

:ZERO:AUTO?

CALibrate:ZERO:AUTO? queries the autozero mode. Returns "0" (OFF or ONCE) or "1" ON.

CALibration?

CALibration? performs a calibration using the specified calibration value set by the CALibration:VALue command and queries the calibration response to verify a successful calibration.

Comments

- Execution of this command begins the electronic adjustment for the function and range the multimeter is set to. The adjustment is performed based on the value stated in the CAL:VAL command and the multimeter expects that value at the input terminals.
- The command returns "0" to indicate there are no calibration errors and the calibration was performed. A "1" is returned if a calibration error occurs and a calibration is unable to be performed. The error message is reported to the output buffer.
- You must set CALibration:SECure:STATe OFF <code> to allow a calibration to be performed. This requires that you know the calibration secure code. The secure state enabled prevents unauthorized calibration of the multimeter.

Calibrate the active function and range using the CAL:VALue:

```
CAL?   Perform the calibration.
```

monitor the status byte to detect calibration operation complete

```
enter statement
```

Enter cal response into computer to verify the calibration was successful.

6 Keysight E1412A Replaceable Parts

Introduction

This chapter contains information for ordering replaceable parts for the Keysight E1412A C-size Multimeter.

Exchange Assemblies

Table 6-1 lists assemblies that may be replaced on an exchange basis (EXCHANGE ASSEMBLIES). Exchange, factory-repaired and tested assemblies are available only on a trade-in basis. Defective assemblies must be returned for credit. Assemblies required for spare parts stock must be ordered by the new assembly part number. Contact your nearest Keysight Technologies Sales and Service Office for details.

Ordering Information

To order a part listed in Table 6-1, specify the Keysight part number and the quantity required. Send the order to your nearest Keysight Technologies Sales and Service Office.

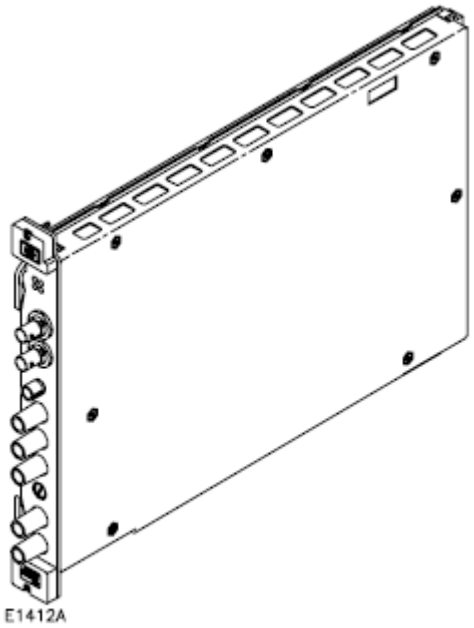

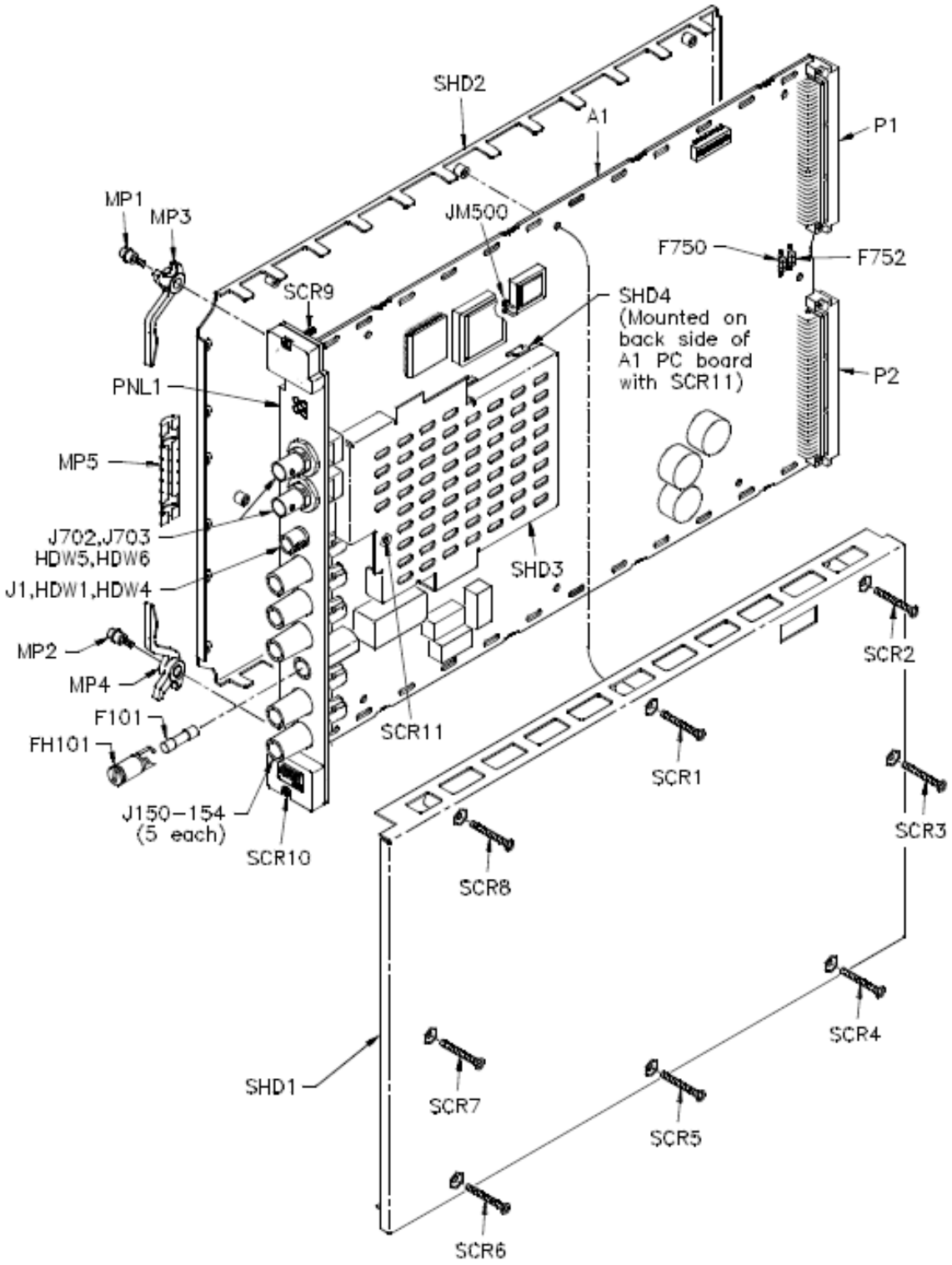

Figure 6-1 Keysight E1412A Replaceable Parts

Table 6-1 Keysight E1412A Replaceable Parts

Reference Designator (see Table 6-2)	Keysight Part Number	Qty	Description	Mfr Code (see Table 6-3)	Mfr Part Number
			C-size EXCHANGE ASSEMBLIES		
	E1412-66201		MULTIMETER MODULE (NEW)	28480	E1412-66201
	E1412-69201		MULTIMETER MODULE (EXCHANGE)	28480	E1412-69201
			PC ASSEMBLY PARTS; C-size MULTIMETER		
A1FH101	2110-0869	1	FUSEHOLDER-HRZNTL PC MNT 6.3A 250V	06328	FAB 031.3558
A1F101	2110-0957	1	FUSE 3.15A 250V, Current Fuse, Front Panel	02805	GDA-3.15
A1F750	2110-0688	2	FUSE 3A 125V, AXL LEAD (replaces SMT fuse)	04703	R251003T1
A1F752	2110-0688		FUSE 3A 125V, AXL LEAD (replaces SMT fuse)	04703	R251003T1
A1J150	E1412-62101	5	TERM-SNGL, INPUT, RED TERM-SNGL, INPUT, RED TERM-SNGL,	28480	E1412-62101
A1J151	E1412-62101		INPUT, RED TERM-SNGL, INPUT, RED TERM-SNGL, INPUT, RED	28480	E1412-62101
A1J152	E1412-62101		CONN-RF BNC FEMALE, 50 OHMS	28480	E1412-62101
A1J153	E1412-62101		CONN-RF BNC FEMALE, 50 OHMS	28480	E1412-62101
A1J154	E1412-62101			28480	E1412-62101
A1J702	1250-1842	2		01380	227677-1
A1J703	1250-1842		CONN-POST TYPE 2.54-PIN-SPCG 64 CONT CONN-POST TYPE 2.54-PIN-SPCG 96 CONT	01380	227677-1
A1P1	1252-1596	1		01380	536010-5
A1P2	1252-4743	1		01380	650945-5
			MECHANICAL PARTS; C-size MULTIMETER		
HDW1	2190-0027	1	WASHER-LOCK, internal tooth, .25 in, .256-IN-ID WASHER-FLAT,	00000	
HDW2, 3	3050-0604	2	metalic, 7/16 in, .5-IN-ID	00000	
HDW4	2950-0006	1	NUT- HEX-DBL CHAMFER, 1/4-32-THD	00000	
HDW5, 6	2950-0054	2	NUT- HEX-DBL CHAMFER, 1/2-28-THD	00000	
J1	1510-0038	1	BINDING POST SINGLE, KNURLED	28480	1510-0038
MP1, 2	E1400-00610	2	SHOULDER SCREW ASSY	28480	E1400-00610
MP3	E1400-45101	1	HANDLE-TOP-METAL, INJECT/EJECT	28480	E1400-45101
MP4	E1400-45102	1	HANDLE-BTM-METAL, INJECT/EJECT	28480	E1400-45102
MP5	8160-0686	1	RFI STRIP, FINGERS	03647	00786-185
PNL1	E1412-00201	1	FRONT PANEL, E1412A	28480	E1412-00201
SCR1 - 8	0515-1135	8	SCREW - FH M 3.0X0.5 25mm long TORX T10	13962	
SCR9, 10	0515-2733	2	SCREW - PH M 2.5 17mm, MOD TOP/BOTTOM	00000	
SCR11	0515-1032	1	SCREW - FH M3.0X14mm long TORX T10	00000	
SHD1	E1412-00601	1	SHIELD - MODULE TOP SHIELD -	28480	E1412-00601
SHD2	E1412-00602	1	MODULE BOTTOM SHIELD - A-to-D	28480	E1412-00602
SHD3	E1412-00603	1	COMPONENT SIDE SHIELD - A-to-D	28480	E1412-00603
SHD4	E1412-00604	1	CIRCUIT SIDE	28480	E1412-00604

Table 6-2 Keysight E1412A REFERENCE DESIGNATORS

Keysight E1412A REFERENCE DESIGNATORS	
A ..... assembly	LBL.....label
CBL ..... cable	MP ..... misc. mechanical part
F .....fuse	P ..... electrical connector (plug)
FC.....fuseholder	PNL ..... panel
HDW .....hardware	SCR.....screw
J ..... electrical connector (jack)	SHD ..... shield
K.....relay	SP.....switch package
	W .....cable, wire

Table 6-3 Keysight E1412A Code List of Manufacturers

Mfr Code	Manufacturer Name	Address
00000	Any satisfactory supplier	
01380	AMP Inc	Harrisburg, PA 17111
01850	Aromat Corporation	New Providence, NJ 07974
02805	Cooper Industries Inc.	Richmond, IN 47375
03647	Instrument Specialties Co., Inc.	Del Water Gap, PA
04501	Coto Wabash	Providence, RI 02907
04703	Littelfuse Inc	Des Plaines, IL 60016
04990	Grayhill Inc.	La Grange, IL 60525
06328	Schuster AG	Luzern, Switzerland
13962	Medalist Industries Inc.	Milwaukee, WI 53224
28480	Keysight Technologies, Inc.	Palo Alto, CA 94304

7 Backdating

This chapter normally contains information necessary to adapt this manual to instruments not directly covered by the current content. At this printing, however, the manual does apply to all instruments and no information is required here.

8 Service

Introduction

This chapter contains information for servicing the Keysight E1412A multimeter.

WARNING Do not perform any of the service procedures shown unless you are a qualified, service-trained technician, and have read the WARNINGS and CAUTIONS in Chapter 1 (and the Warnings and safety information preceding chapter 1).

Equipment Required

You will need an ohmmeter to make continuity checks on fuses F750 andF752 which are the only user replaceable components on the PC board. To avoid damage to the screw head slots, use Torx drivers as specified in the instructions. The Torx drivers needed are T8 and T10 (Keysight part numbers 8710-1673 and 8710-1284, respectively).

Service Aids

Service aids on printed circuit boards include pin numbers, some reference designations, and assembly part numbers. See Chapter 6 for descriptions and locations of Keysight E1412A (Table 6-1) replaceable parts.

Troubleshooting

This section provides a brief check list of common failures. Make sure the failure is isolated to the instrument rather than caused by external connections before troubleshooting the multimeter. Also, make sure the instrument is accurately calibrated. The multimeter's circuits allow troubleshooting with basic equipment such as a 61/2-digit multimeter and a 100 MHz oscilloscope.

There are two main steps in troubleshooting an Keysight E1412A multimeter problem: (1) identifying the problem, and (2) isolating the cause to a user-replaceable component.

Identifying the Problem

Multimeter problems can be divided into four general categories:

- Self-test errors
- Operator errors
- Catastrophic failures
- Performance out of specification

Self-Test Procedures

Power-On Self-Test

A small set of self-tests are performed each time the multimeter is powered on. These tests check that the minimum set of logic and measurement hardware are functioning properly. The power-on self-tests are listed below in the order they are executed. For a more complete description of each test, see the description in the following section, " Self-Test Descriptions."

Test 701, checks that the calibration security disable jumper is removed.

Copy secured calibration constants from calibration RAM to working RAM. *Errors 740 through 748 may be reported during this operation.*

Self-test 625, establishes communication with the I/O processor.

Self-test 603, checks that the ADC logic is functioning.

Self-test 604, checks that the ADC analog hardware is functioning.

Self-test 626, checks that the I/O processor passed its self-test.

Self-Test Errors

Failing a self-test procedure indicates that parts of the multimeter are not functioning properly and need to be serviced. Passing self-test gives a better than 90% confidence that the Keysight E1412A hardware is operational. However, passing self-test does not guarantee that the multimeter will produce accurate results. Only performance verification can ensure the accuracy of measurement results.

Self-test procedures are numbered in the order in which they are executed. The order is designed to build confidence from a small kernel towards progressively more complex internal configurations.

An error number is returned when the multimeter self-test fails. If a self-test error occurs, cycle power and repeat the self-test. If the error repeats, see "Testing Assemblies" to troubleshoot the multimeter. Self-test error codes are listed in the following table.

Error	Description
0	All tests passed
602	RAM read/write failed
603	A/D sync stuck
604	A/D slope convergence failed
605	Cannot calibrate rundown gain Rundown gain out of
606	range Rundown too noisy
607	DC gain x1 failed DC gain x10 failed DC gain x100 failed
609	Ohms 500 nA source failed
610	Ohms 5 μA source failed
611	DC 1000V zero failed
612	Ohms 10 μA source failed DC current sense
613	failed Ohms 100 μA source failed
614	DC high voltage attenuator failed
615	Ohms 1 μA source failed
616	AC rms zero failed
617	AC rms full scale failed
618	Frequency counter failed
619	Cannot calibrate precharge
620	I/O processor does not respond
621	I/O processor failed self-test

Self-Test Descriptions

This section provides a brief description for each internal self-test procedure including purpose, test setup, and failure criteria. Erroneous self-test failures may occur when the power line voltage is improperly set. Errors may also be produced by ac signals present on the multimeter input terminals (front or rear) during self-test. Long test leads can act as an antenna causing pick-up of ac signals.

602 RAM read/write failed. This test writes and reads a 55H and AAH checker board pattern to each address of ram U503. Any incorrect read back will cause a test failure. This error is only readable from the remote interface.

603 A/D sync stuck The main CPU issues an A/D sync pulse to U500-38 and to U501 where ADC slope counters are latched. A failure is detected when a sync interrupt is not recognized and a subsequent time-out occurs.

604 A/D slope convergence failed The dc section is configured to the measure zero state (MZ) in the 10 V range. This test checks whether the ADC integrator produces nominally the same number of positive and negative slope decisions (±10%) during a 20 ms interval.

605 Cannot calibrate rundown gain This test checks the nominal gain between the integrating ADC and the U500 on chip ADC. This error is reported if the procedure can not run to completion due to a hardware failure.

606 Rundown gain out of range This test checks the nominal gain between the integrating ADC and the U500 on chip ADC. The nominal gain is checked to ±10% tolerance.

607 Rundown too noisy This test checks the gain repeatability between the integrating ADC and the U500 on chip ADC. The gain test (606), is performed eight times. Gain noise must be less than ±64 lsb's of the U500 on chip ADC.

609 DC gain x1 failed This test configures for the 10 V dc range. The dc amplifier gain is set to x1. The measure customer (MC) input is selected to the internal TSENSE source which produces 0.6 volts. A 20 ms ADC measurement is performed and checked against a limit of 0.6 V ± 0.3 V.

610 DC gain x10 failed This test configures for the 1 V dc range. The dc amplifier gain is set to x10. The measure customer (MC) input is selected to the internal TSENSE source which produces 0.6 volts. A 20 ms ADC measurement is performed and checked against a limit of 0.6 V ± 0.3 V.

611 DC gain x100 failed This test configures for the 100 mV dc range. The dc amplifier gain is set to x100. The measure customer (MC) input is selected to the internal TSENSE source which produces 0.6 volts. A 20 ms ADC measurement is performed and checked for a +overload response.

612 Ohms 500 nA source failed This test configures to the 10 V dc range with the internal 10 M 100:1 divider U102A connected across the input. The 500 nA ohms current source is connected to produce a nominal 5 V signal. A 20 ms ADC measurement is performed and the result is checked against a limit of 5 V ± 1 V.

613 Ohms 5 uA source failed This test configures to the 10 V dc range with the internal 10 M 100:1 divider U102A connected across the input. The 5 μA ohms current source is connected. The compliance limit of the current source is measured. A 20 ms ADC measurement is performed and the result is checked against a limit of 7.5 V ± 3 V.

614 DC 1000 V zero failed This test configures to the 1000 V dc range with no input applied. A 20 ms ADC measurement is performed and the result is checked against a limit of 0 V ± 5 mV.

615 Ohms 10 μA source failed This test configures to the 10 V dc range with the internal 10 M 100:1 divider U102A connected across the input. The 10 μA ohms current source is connected. The compliance limit of the current source is measured. A 20 ms ADC measurement is performed and the result is checked against a limit of 7.5 V ± 3 V.

616 DC current sense failed This test configures to the 3 A dc range. A 20 ms ADC measurement is performed and the result is checked against a limit of 0 A ± 5 A. This test confirms that the dc current sense path is functional. The test limit is set wide because K101 does not open the current input during self-test. This test should catch a dc current sense failure without causing false failures when current inputs are applied during self-test.

617 Ohms 100 μA source failed This test configures to the 10 V dc range with the internal 10 M 100:1 divider U102A connected across the input. The 100 μA ohms current source is connected. The compliance limit of the current source is measured. A 20 ms ADC measurement is performed and the result is checked against a limit of 7.5 V ± 3 V.

618 DC high voltage attenuator failed This test configures to the 1000 V dc range. The 500 nA ohms current source is connected to produce a nominal 5 V signal. A 20 ms ADC measurement is performed and the result is checked against a limit of 5 V ± 1 V.

619 Ohms 1 mA source failed This test configures to the 10 V dc range with the internal 10 M 100:1 divider U102A connected across the input. The 1 mA ohms current source is connected. The compliance limit of the current source is measured. A 20 ms ADC measurement is performed and the result is checked against a limit of 7 V ± 3.5 V.

620 AC rms zero failed This test configures for the 100 mV ac range with the ac input grounded through K103. The internal residual noise of the ac section is measured and checked against a limit of –10 mV to 70 mV at the output of the rms-to-dc converter.

621 AC rms full scale failed This test configures for the 100 mV ac range. The 1 mA ohms current source is switched on to charge the ac input capacitor C301. This produces a pulse on the output of the rms-to-dc converter which is sampled 100 ms after the current is applied. A 20 ms A/D measurement is performed and checked against a limit of 10 V ± 8 V into the ADC.

622 Frequency counter failed This test configures for the 100 mV ac range. This test immediately follows test 621. With C301 holding a charge from test 621 the ac input is now switched to ground with K103. This produces a positive pulse on the input to the frequency comparator U310A. While C301 discharges, the ENAB FREQ bit is toggled four times to produce a frequency input to the counter logic in U501. A failure occurs if the counter can not measure the frequency input.

623 Cannot calibrate precharge This test configures to the 100 V dc range with no input applied. The ADC is configured for 200 ms measurements. The U500 pulse width modulated (PWM) DAC output (C512) is set to about 4 volts. A reading is taken in with U101 in the MC state. A second reading is taken in the PRE state. The precharge amplifier voltage offset is calculated. The U500 DAC output is set to about 1.5 volts and the precharge offset is measured again. The gain of the offset adjustment is calculated. This test assures a precharge amplifier offset adjustment is achievable.

625 I/O processor does not respond This test checks that communications can be established between U500 and U700 through the optically isolated (U506 and U704) serial data link. Failure to establish communication in either direction will generate an error.

626 I/O processor failed self-test This test causes the earth referenced processor U700 to execute an internal, ram test. Failure will generate an error.

Operator Errors

Apparent failures may result from operator errors. See Appendix B - *ErrorMessages* and the *Measurement Tutorial* in Chapter 2 of the User's Manual.

Unit does not operate properly

Verify the VXI mainframe line frequency. Send the CAL:LFR <frequency> command to set the correct reference if needed. The default value for line frequency is 60 Hz and you must set it to 50 Hz if that is the line frequency.

Unit reports an error between 740 and 748

These errors may be produced if you accidentally turn off power to the unit during a calibration or while changing a non-volatile state of the instrument. Recalibration or resetting the state should clear the error. If the error persists, a hardware failure of the calibration RAM may have occurred.

Unit fails self-test

If your module fails self-test, ensure that all measurement terminal connections are removed while the self-test is performed. Errors may be induced by ac signals present on the multimeter input terminals during self-test. Long test leads can act as an antenna causing pick-up of ac signals.

Current input is inoperative

Verify the front panel Fast-Acting, class H, 3.15 A, 250V fuse is functional. This fuse is designated "Current Fuse, F3.15H, 250V" on the front panel.

Readings indicate OVERLOAD

An overload is caused when the gain and offset corrected reading result is greater than the full scale value (or less than the full scale value) for the present measuring function and range. This can be caused by incorrect calibration, saturated (railed) dc input amplifier, or by failure of the a-to-d converter. Overload can also be caused if the current source value is too large in the ohms function. In ac functions, overload will also be generated if the output of the rms-to-dc converter is greater than 2 Vdc for sine wave inputs > 20 Hz.

Readings are inaccurate

Inaccurate readings are normally caused by either invalid calibration or by non-linear measuring circuits. If recalibration does not correct the inaccuracies, the amplifier or solid state switches may be causing measurement non-linearities. Non-linear operation of the ohms current source due to failure may cause reading inaccuracies in the ohms function.

Readings show excessive noise

Reading noise is usually caused by the dc input amplifier or the a-to-d converter circuitry. Remember that it is normal for the most sensitive measuring ranges to show more noise than the least sensitive ranges. Verify that the multimeter fails to meet its zero input specifications. Low frequency ac measurements will experience more noise than higher frequency inputs. Verify that the multimeter fails to meet ac specifications. Ensure that the correct ac filter is selected for the applied input signal frequency.

If calibration constants become corrupted, it is possible for the multimeter to generate noisy results without a hardware failure. Perform a new zero offset calibration and gain calibration and retry the performance verification.

Readings indicate zero with any input applied

A constant zero reading is normally caused when either the output of the dc input amplifier is stuck at a fixed level (like 0 volts) or when the a-to-d converter integrator amplifier is stuck at a fixed level.

Catastrophic Failure

If a catastrophic failure occurs, the module may have blown the +12V or +5V fuse. These fuses protect the VXIbus +12V and +5V power supplies from failures that occur on the module. See the sections that follow for +12V and +5V fuse replacement.

Performance Out of Specification

If the multimeter performance is out of specification limits, use the adjustment procedures in Chapter 5 to correct the problem. If the condition repeats, see "Inspecting Assemblies" for a guide to troubleshooting the multimeter.

To Replace the Current Input Fuse

The front current input terminal is protected by a series fuse. The fuse is a 3A, 250 Vac, fast-blow fuse and is located on the front panel directly below the current "I" terminal. To replace this fuse, order Keysight part number 2110-0957 or see Table 6-1 for the commercially available equivalent.

To Replace the +12V Fuse

F750 is a 3A fuse which protects the +12V supply. It is located between the P1 and P2 connectors at the rear of the PC assembly and is a surface mount (SMT) component. Replace this fuse with an axial lead fuse in the through- holes provided outside of the SMT part (see Figure 8-1 for fuse replacement diagram). Use Keysight part number 2110-0688 or see Table 6-1 for the commercially available equivalent.

To Replace the +5V Fuse

F752 is a 3A fuse which protects the +5V supply. It is located between the P1 and P2 connectors at the rear of the PC assembly and is a surface mount (SMT) component. Replace this fuse with an axial lead fuse in the through- holes provided outside of the SMT part (see Figure 8-1 for fuse replacement diagram). Use Keysight part number 2110-0688 or see Table 6-1 for the commercially available equivalent.

CAUTION

Surface mount components should *only* be removed using soldering irons or desoldering stations *expressly* designed for surface mount components. *Use of conventional solder removal equipment will almost always result in permanent damage to the printed circuit board and will void your Keysight Technologies factory warranty.* It is recommended you leave the surface mounted fuse component in place and install the replacement over the top as illustrated in Figure 8-1.

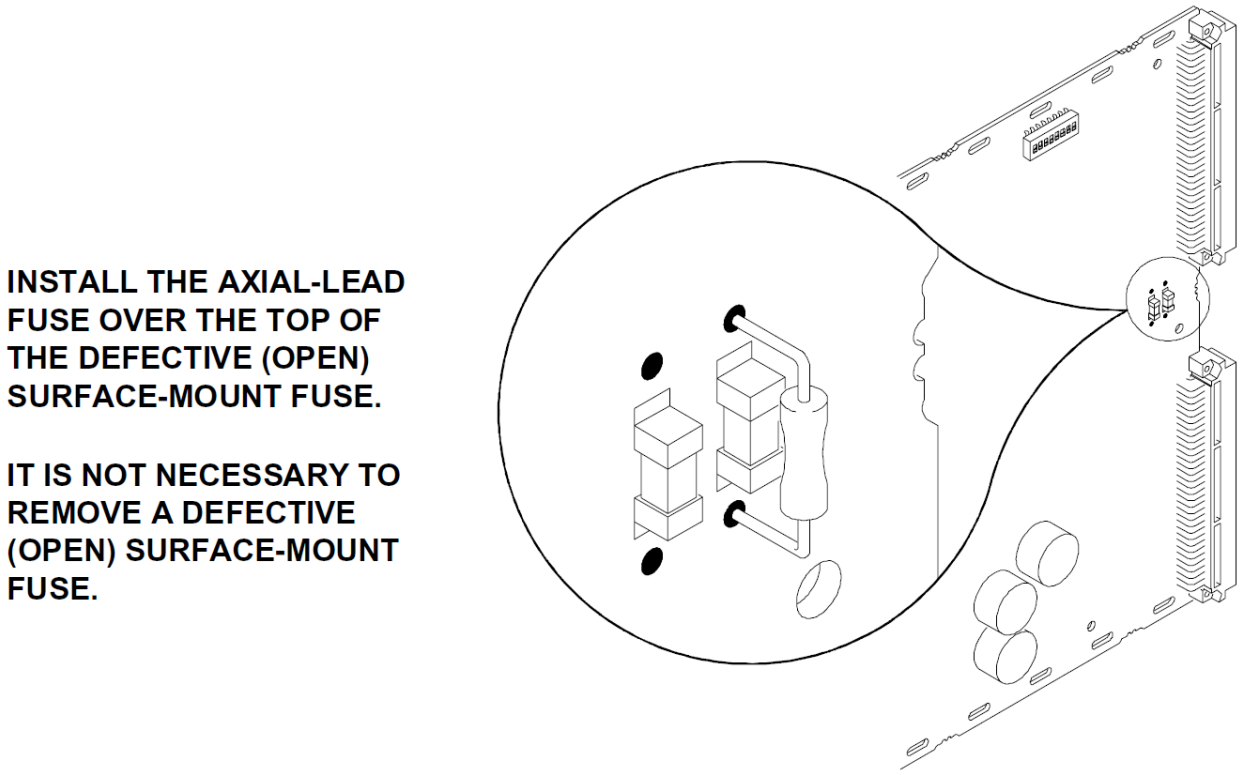

Figure 8-1 Replacing F750 and F752 With An Axial-Lead Fuse

Inspecting Assemblies

Table 8-1 provides a list of items you can inspect in the multimeter. This inspection may lead to isolating the problem to a user-replaceable part. See Figures 6-1 for locations of user-replaceable parts.

NOTE If the problem cannot be traced to a user-replaceable part listed in Table 6-1, return the multimeter to Keysight Technologies for exchange.

Table 8-1 Keysight E1412A Inspection Checks

Check	Check/Inspect for
Heat Damage	Discolored PC boards Evidence of arcing
Switch Setting Switch Setting	LADDR setting LADDR setting
Front Panel	Input terminals BNC connectors
PC Assembly	Fuse continuity P1/P2 connector contacts Relay continuity/operation

Check for Heat Damage

Inspect the multimeter for signs of abnormal internally generated heat such as discolored printed circuit boards or components, damaged insulation, or evidence of arcing. If there is damage, do not operate the multimeter until you have corrected the problem.

Check for Correct Address Switch Setting

Verify that the logical address setting is set correctly (factory set at 24). See the *Keysight E1412A User's Manual and SCPI Programmer's Guide* for information.

Inspect Multimeter Front Panel/PC Assembly for Damage

Inspect the P1 and P2 connector pins for damage. If you need to replace the P1, P2, input terminals or BNC connectors, see the sections that follow in this chapter. To check the pc assembly, remove mainframe power and remove the multimeter from the mainframe. Disassemble the multimeter and inspect the assemblies (see "Disassembly/Reassembly" section which follows for instructions).

Repair/Maintenance Guidelines

This section provides guidelines for repairing and maintaining the Keysight E1412A multimeter, including:

- Electrostatic Discharge (ESD) precautions
- Disassembly/Reassembly
- Replacing input terminals
- Replacing BNC connectors
- Soldering printed circuit boards
- Post-repair safety checks

Electrostatic Discharge (ESD) Precautions

Almost all electrical components can be damaged by electrostatic discharge (ESD) during handling. Component damage can occur at electrostatic discharge voltages as low as 50 volts. The following guidelines will help prevent ESD damage when servicing the multimeter or any electronic device.

- Disassemble instruments only in a static-free work area.
- Remove all plastic, Styrofoam, vinyl, paper, and other static-generating materials from the immediate work area.
- Use a conductive work area to dissipate static charge.
- Use a conductive wrist strap to dissipate static charge accumulation.
- Minimize handling.
- Do not stack assemblies.
- Use anti-static solder suckers; others will generate ESD.
- Keep replacement parts in original static-free packaging.

CAUTION **It is especially important to use anti-static procedures during the following disassembly/reassembly procedures and any replacement procedure contained in this chapter.**

E1412A Module Disassembly

Refer to Figure 8-2 and use the following steps to disassemble the Keysight E1412A. Steps 1, 2, 3 and 4 are called out on the diagram.

Step 1 Remove the front panel nut and washer from each BNC connector.

Step 2 Place the module on its side and remove the torx screws that hold the insertion/extraction handles and the PC assembly to the front panel. Separate the front panel from the PC assembly.

Step 3 Place the module on its side with the address switch visible and remove the eight T10 torx screws on the module's shield.

Step 4 Lift the top shield off of the PC assembly to gain access to PC board components. The PC board can be separated from the bottom shield.

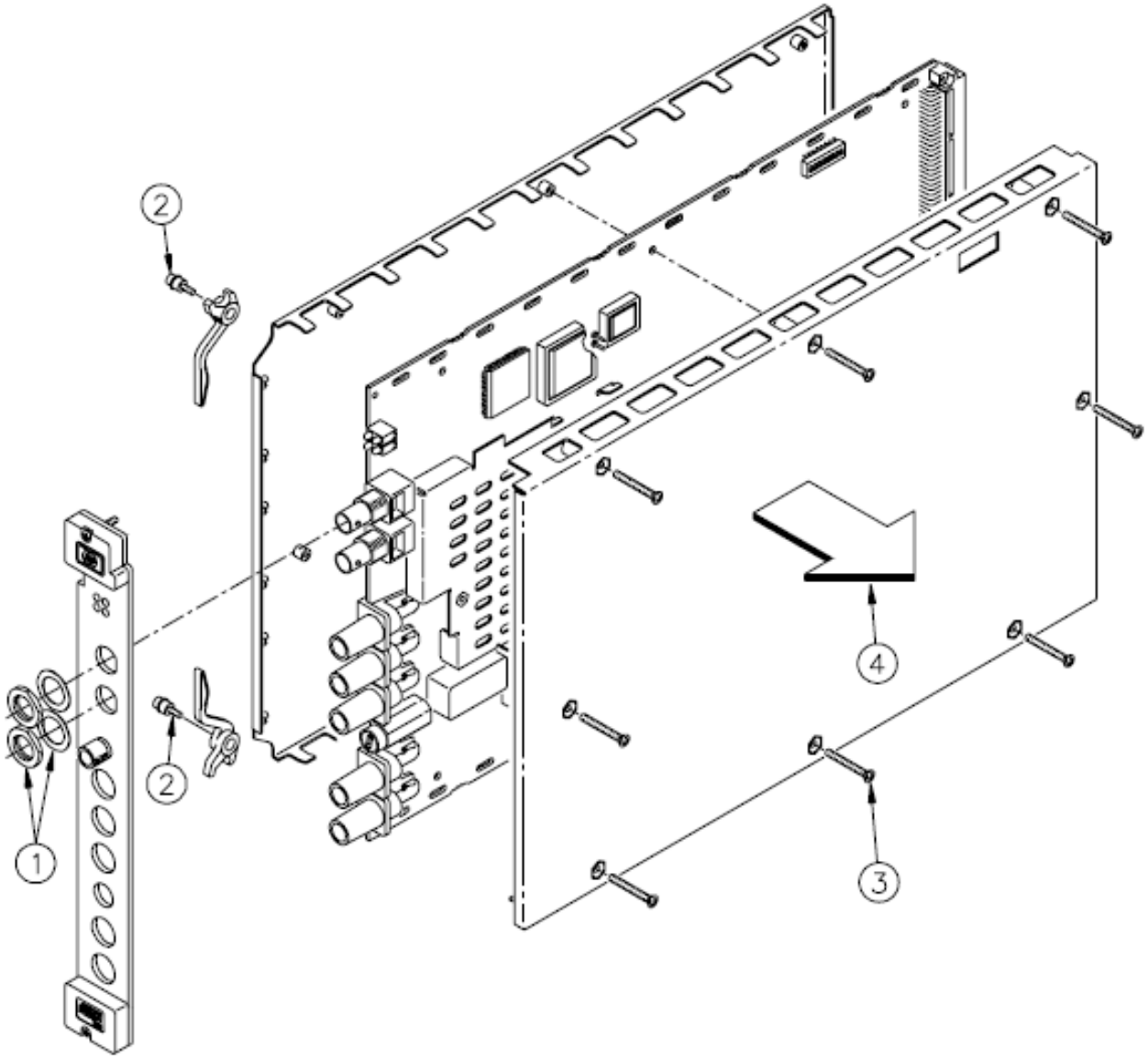

Figure 8-2 Disassembly/Reassembly of Keysight E1412A

E1412A Module Reassembly

Refer to Figure 8-2 and use the following steps to reassemble the Keysight E1412A:

Step 1 Install the front panel over the BNC connectors and input terminals and secure the panel to the BNC connectors with washers and nuts previously removed.

Step 2 Reattach the insertion/extraction handles with the screw assembly passing through the handle, PC board and threaded into the front panel block support.

Step 3 Place the PC assembly on the thin bottom shield.

Step 4 Reinstall the top shield with the address switch cutout over the PC assembly and reinstall the eight screws securing the top and bottom shields onto the PC assembly.

Input Terminal Replacement

Use the following steps to replace an E1412A input terminal.

Step 1 Disassemble the module according to Figure 8-2 and the associated procedure.

Step 2 Unsolder the terminal from the PC assembly at its one solder point (see Figure 8-3).

Step 3 Remove the terminal by lifting the unsoldered end and sliding it off the edge of the PC board.

Step 4 Reverse the procedure to reinstall the new terminal by first aligning the terminal with the alignment notch and hole guide, then soldering.

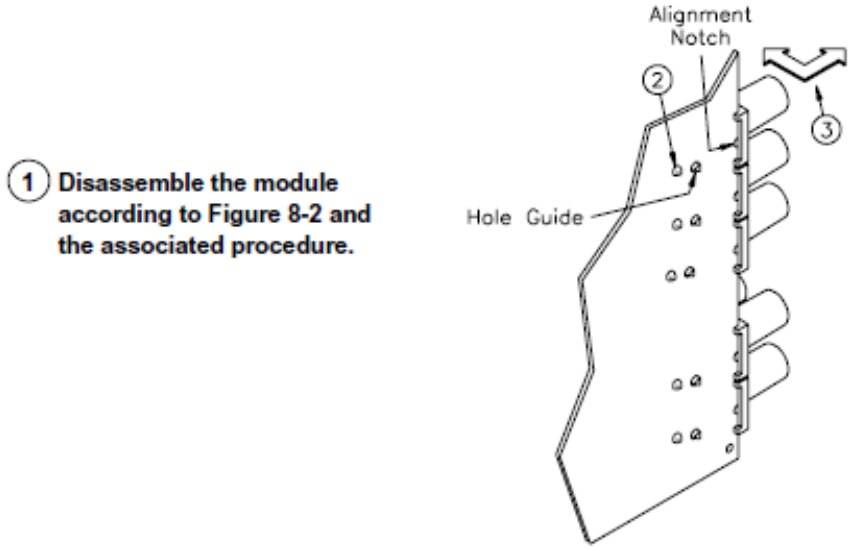

Figure 8-3 Remove/Install an Input Terminal.

BNC Connector Replacement

Use the following steps to replace the Keysight E1412A BNC connectors.

Step 1 Disassemble the module according to Figure 8-2 and the associated procedure.

Step 2 Remove the two torx screws that secure the BNC connector to the PC board (see Figure 8-4).

Step 3 Unsolder the BNC connector from the PC assembly at its two solder points (see Figure 8-4).

Step 4 Remove the terminal by lifting the connector from the PC board.

Step 5 Reverse the procedure to reinstall the new BNC connector by first inserting the connector leads into the PC board solder eyes, then secure the connector to the PC board with the torx screws followed by soldering the connector leads to the PC board.

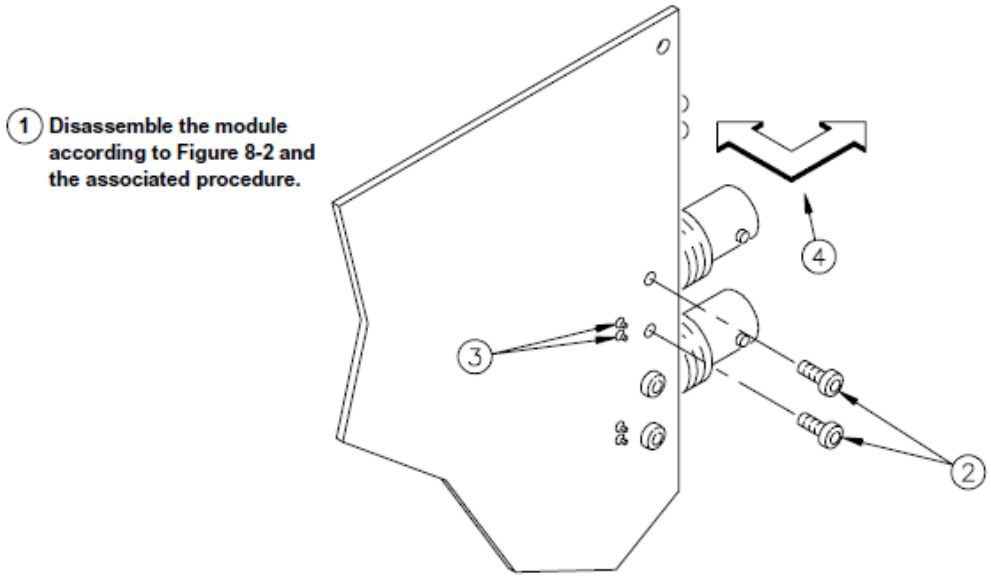

Figure 8-4 Remove/Install a BNC Connector.

Soldering Printed Circuit Boards

Most of the components on the PC assembly are suface mount components. Surface mount components should *only* be removed using soldering irons or desoldering stations *expressly* designed for surface mount components. *Use of conventional solder removal equipment will almost always result in permanent damage to the printed circuit board and will void your Keysight Technologies factory warranty.* A few of the components in the multimeter have plated-through holes that allow a solder path to both sides of the insulating material. For these components (such as replacing fuses F750 or F752 with axial-lead components), soldering can be done from either side of the board with equally good results. When soldering to any circuit board, keep in mind the following guidelines.

- Do not use a sharp metal object such as an awl or twist drill, since sharp objects may damage the plated-through conductor.
- Avoid unnecessary component unsoldering and soldering. Excessive replacement can result in damage to the circuit board and/or adjacent components.
- Do not use a high power soldering iron on etched circuit boards, as excessive heat may lift a conductor or damage the board.
- Use a suction device or wooden toothpick to remove solder from component mounting holes. When using a suction device, be sure the equipment is properly grounded to prevent electrostatic discharge from damaging CMOS devices.

Post-Repair Safety Checks

After making repairs to either the the Keysight E1412A multimeter, inspect the multimeter for any signs of abnormal internally generated heat, such as discolored printed circuit boards or components or evidence of arcing. Determine and correct the cause of the condition. Then run the self-test (*TST? command) to verify that the multimeter is functional.

A E1412A Multimeter Specifications

DC Characteristics

Accuracy Specifications ± (% of reading + % of range) [1]

Function	Range [3]	Test Current or Burden Voltage	24 Hour [2] 23°C ±1°C	90 Day 23°C ±5°C	1 Year 23°C ±5°C	Temperature Coefficient 0°C - 18°C 28°C - 55°C
DC Voltage	100.0000mV		0.0030 + 0.0030	0.0040 + 0.0035	0.0050 + 0.0035	0.0005 + 0.0005
	1.000000V		0.0020 + 0.0006	0.0030 + 0.0007	0.0040 + 0.0007	0.0005 + 0.0001
	10.00000V		0.0015 + 0.0004	0.0020 + 0.0005	0.0035 + 0.0005	0.0005 + 0.0001
	100.0000V		0.0020 + 0.0006	0.0035 + 0.0006	0.0045 + 0.0006	0.0005 + 0.0001
	300.0000V		0.0020 + 0.0018	0.0035 + 0.0030	0.0045 + 0.0030	0.0005 + 0.0003
Resistance [4]	100.0000Ω	1mA	0.0030 + 0.0030	0.0080 + 0.0040	0.0100 + 0.0040	0.0006 + 0.0005
	1.000000kΩ	1mA	0.0020 + 0.0005	0.0080 + 0.0010	0.0100 + 0.0010	0.0006 + 0.0001
	10.00000kΩ	100µA	0.0020 + 0.0005	0.0080 + 0.0010	0.0100 + 0.0010	0.0006 + 0.0001
	100.0000kΩ	10µA	0.0020 + 0.0005	0.0080 + 0.0010	0.0100 + 0.0010	0.0006 + 0.0001
	1.000000MΩ	5µA	0.0020 + 0.0010	0.0080 + 0.0010	0.0100 + 0.0010	0.0010 + 0.0002
	10.00000MΩ	500nA	0.0150 + 0.0010	0.0350 + 0.0010	0.0540 + 0.0010	0.0030 + 0.0004
	100.0000MΩ	500nA || 10MΩ	0.3000 + 0.0100	0.8000 + 0.0100	0.8000 + 0.0100	0.1500 + 0.0002
DC Current	10.00000mA	<0.1V	0.0050 + 0.0100	0.0500 + 0.0200	0.0700 + 0.0200	0.0050 + 0.0020
	100.0000mA	<0.7V	0.0100 + 0.0040	0.0500 + 0.0050	0.0700 + 0.0050	0.0060 + 0.0005
	1.000000A	<1V	0.1000 + 0.0060	0.1300 + 0.0100	0.1500 + 0.0100	0.0060 + 0.0010
	3.000000A	<2V	0.7000 + 0.0200	0.7200 + 0.0200	0.7200 + 0.0200	0.0060 + 0.0020
DC:DC Ratio	100mV to 300V		(Input Accuracy) + (Reference Accuracy) Input Accuracy = accuracy specification for the HI-LO input signal. Reference Accuracy = accuracy specification for HI-LO reference input signal (Sense HI-LO input terminals). **NOTE:** Autorange is used for the reference signal regardless of the range set for the HI-LO input signal. The 10V range is the highest range available for the reference signal and the highest range the multimeter will autorange to for measuring the reference signal.			

Measuring Characteristics

DC Voltage

Measurement Method:	Continuously integrating, multi-slope III A/D converter.	
A/D Linearity:	0.0002% of reading + 0.0001% of range	
Input Resistance:	0.1V, 1V, 10V ranges	Selectable 10MΩ or >10GΩ
	100V, 300V ranges	10MΩ ± 1%
Input Bias Current:	<30pA at 25°C	
Input Terminals:	Copper alloy	
Input Protection:	300V on all ranges	

Resistance

Measurement Method:	Selectable 4-wire or 2-wire ohms. Current source referenced to LO input.
Max. Lead Resistance: (4-wire ohms)	10% of range per lead for 100Ω and 1kΩ ranges. 1kΩ per lead on all other ranges.
Input Protection:	300V on all ranges

DC Current

Shunt Resistor:	0.1Ω for 1A and 3A. 5Ω for 10mA and 100mA
Input Protection:	Externally accessible 3.15A, 250V, Class H fuse (see note at the bottom of the AC Measuring Characteristics page describing class H fuses)

DC:DC Ratio

Measurement Method:	Input HI-LO/Reference HI-LO (Reference = Ω4W Sense terminals)
Input HI-LO	100mV to 300V ranges
Reference HI-LO	100mV to 10V ranges (autoranged)
Input to Reference	Reference LO to Input LO voltage <2V Reference HI to Input LO voltage <12V

Measurement Noise Rejection
DC CMRR: 140 dB [5]

Integration Time	Normal Mode Rejection [6]
60 Hz (50 Hz)	
100 PLC, 1.67s (2s)	60dB [7]
10 PLC, 167ms (200ms)	60dB [7]
1 PLC, 16.7ms (20ms)	60dB [7]
<1 PLC	0dB

[1] Specifications are for 1-hour warm-up at an integration time of 100 PLCs.
[2] Relative to calibration standards.
[3] 20% overrange on all ranges, except 300Vdc and 3A range which have 1% overrange.
[4] Specifications are for 4-wire ohms function, or 2-wire ohms using Math Null. Without Math Null, add 0.2Ω additional error in 2-wire ohms function.

Operating Characteristics [8]

Function	PLCs	Digits	Readings/sec	Additional Noise Error
DCV, DCI and Resistance	100	6.5	0.6 (0.5) [8]	0% of range
	10	6.5	6 (5) [8]	0% of range
	1	5.5	60 (50) [8]	0.001% of range [9]
	0.2	5.5	300	0.001% of range [9]
	0.02	4.5	1000	0.01% of range [9]

System Speeds [10]

Function Change: 30/sec
Range Change: 65/sec
Autorange Time: <30 ms
Max. Internal Trigger Rate: 1000/sec
Max. External Trigger Rate to Memory: 1000/sec

Additional Error with Autozero OFF

Following instrument warm-up at calibration temperature ±1°C and <10 minutes:
100mV - 100V ranges: add (0.0002% range additional error +5μV). 300V range: add 0.0006% range.

Settling Considerations

Reading settling times are affected by source impedance, cable dielectric characteristics and input signal changes.

Measurement Considerations

Keysight recommends the use of PTFE or other high-impedance, low-dielectric absorption wire insulation for these measurements.

[5] For 1kΩ unbalance in LO lead.
[6] For power-line frequency ±0.1%.
[7] For power-line frequency ±1%, subtract 20dB; for ±3%, subtract 30dB.
[8] Readings speeds for 60Hz and (50Hz) operation, Autozero OFF.
[9] For 300V and 3A ranges: use 0.003% range for 5.5 digits and 0.030% range for 4.5 digits; For all ranges: add 20 μV for DC volts, 4μA for DC current or 20mΩ for resistance.
[10] Speeds are for 0.02 PLC integration time, Delay 0 and Autozero OFF. Includes measurement and data transfer over the VXI backplane.

AC Characteristics

Accuracy Specifications ± (% of reading + % of range) [1]

Function	Range [3]	Frequency	24 Hour [2] 23°C ± 1°C	90 Day 23°C ± 5°C	1 Year 23°C ± 5°C	Temperature Coefficient 0°C - 18°C 28°C - 55°C
True RMS AC Voltage [4]	100.0000 mV	3 Hz-5 Hz	1.00 + 0.03	1.00 + 0.04	1.00 + 0.04	0.100 + 0.004
		5 Hz-10 Hz	0.35 + 0.03	0.35 + 0.04	0.35 + 0.04	0.035 + 0.004
		10 Hz-20 kHz	0.04 + 0.03	0.05 + 0.04	0.06 + 0.04	0.005 + 0.004
		20 kHz-50 kHz	0.10 + 0.05	0.11 + 0.05	0.12 + 0.05	0.011 + 0.005
		50 kHz-100 kHz	0.55 + 0.08	0.60 + 0.08	0.60 + 0.08	0.060 + 0.008
		100 kHz-300 kHz	5.00 + 0.50	5.00 + 0.50	5.00 + 0.50	0.200 + 0.020
	1.000000 V to 100.000V [12]	3 Hz-5 Hz	1.00 + 0.02	1.00 + 0.03	1.00 + 0.03	0.100 + 0.003
		5 Hz-10 Hz	0.35 + 0.02	0.35 + 0.03	0.35 + 0.03	0.035 + 0.003
		10 Hz-20 kHz	0.04 + 0.02	0.05 + 0.03	0.06 + 0.03	0.005 + 0.003
		20 kHz-50 kHz	0.10 + 0.04	0.11 + 0.05	0.12 + 0.05	0.011 + 0.005
		50 kHz-100 kHz	0.55 + 0.08	0.60 + 0.08	0.60 + 0.08	0.060 + 0.008
		100 kHz-300 kHz	5.00 + 0.50	5.00 + 0.50	5.00 + 0.50	0.200 + 0.020
	300.000V [12]	3 Hz-5 Hz	1.00 + 0.06	1.00 + 0.09	1.00 + 0.09	0.100 + 0.009
		5 Hz-10 Hz	0.35 + 0.06	0.35 + 0.09	0.35 + 0.09	0.035 + 0.009
		10 Hz-20 kHz	0.04 + 0.06	0.05 + 0.09	0.06 + 0.09	0.005 + 0.009
		20 kHz-50 kHz	0.10 + 0.12	0.11 + 0.15	0.12 + 0.15	0.011 + 0.015
		50 kHz-100 kHz [5]	0.55 + 0.24	0.60 + 0.24	0.60 + 0.24	0.060 + 0.024
		100 kHz-300 kHz [5]	5.00 + 1.50	5.00 + 1.50	5.00 + 1.50	0.200 + 0.060
True RMS AC Current [4]	1.000000 A	3 Hz-5 Hz	1.05 + 0.04	1.05 + 0.04	1.05 + 0.04	0.100 + 0.006
		5 Hz-10 Hz	0.35 + 0.04	0.35 + 0.04	0.35 + 0.04	0.035 + 0.006
		10 Hz-1 kHz	0.15 + 0.04	0.15 + 0.04	0.15 + 0.04	0.015 + 0.006
		1 kHz-5 kHz	0.40 + 0.04	0.40 + 0.04	0.40 + 0.04	0.015 + 0.006
	3.00000 A	3 Hz-5 Hz	1.70 + 0.06	1.70 + 0.06	1.70 + 0.06	0.100 + 0.006
		5 Hz-10 Hz	0.95 + 0.06	0.95 + 0.06	0.95 + 0.06	0.035 + 0.006
		10 Hz-1 kHz	0.75 + 0.06	0.75 + 0.06	0.75 + 0.06	0.015 + 0.006
		1 kHz-5kHz	1.00 + 0.06	1.00 + 0.06	1.00 + 0.06	0.015 + 0.006

Additional Low Frequency Errors (% of reading)

Frequency	AC Filter 3 Hz	20 Hz	200 Hz
10 Hz-20 Hz	0	0.74	--
20 Hz-40 Hz	0	0.22	--
40 Hz-100 Hz	0	0.06	0.73
100 Hz-200 Hz	0	0.01	0.22
200 Hz-1 kHz	0	0	0.18
>1 kHz	0	0	0

Additional Crest Factor Errors (non-sinewave) [6]

Crest Factor	Error (% or reading)
1-2	0.05%
2-3	0.15%
3-4	0.30%
4-5	0.40%

NOTE: Crest Factor is not specified for non sinewave inputs <100 Hz using the slow (3 Hz) AC filter. See note [6].

Measuring Characteristics

Measurement Noise Rejection [7]

AC CMRR	70 dB

True RMS AC Voltage

Measurement Method:	AC-coupled True RMS - measures the ac component of the input with up to 300 Vdc of bias on any range (max AC + DC = 300 Vrms).
Crest Factor:	Maximum 5:1 at full scale
AC Filter Bandwidths:	3 Hz-300 kHz (Slow filter) 20 Hz-300 kHz (Medium filter) 200 Hz-300 kHz (Fast filter)
Input Impedance:	1 MΩ ± 2%, in parallel with 100 pF
Input Protection:	300 Vrms all ranges

True RMS AC Current

Measurement Method:	Direct coupled to the fuse and shunt. AC-coupled True RMS measurement (measures the ac component only).
Shunt Resistor:	0.1 Ω for 1 A and 3A ranges
Burden Voltage:	1 A range: <1 Vrms 3A range: < 2Vrms
Input Protection:	Externally accessible 3.15A, 250V, Class H fuse Class H fuses are fuses with a high interrupt rating which defines a fuse's ability to safely interrupt and clear short circuits. Replace the fuse with part number 2110-0957, (3.15A, 250V, 5.0 mm diameter, 20.0 mm long) or use Cooper Industries Inc. fuse part number GDA-3.15.

Operating Characteristics

Function	Digits	Readings/sec	AC Filter
ACV and ACI	6 1/2	1 (per 7 seconds) [8]	Slow (3 Hz) (7 sec settling time)
	6 1/2	1 [8]	Medium (20 Hz)
	6 1/2	1.6 [8],[9]	Fast (200 Hz)
	6 1/2	50 [10]	Fast (200 Hz)

System Speeds [10], [11]

Function or Range Change:	5/sec
Autorange Time:	<0.8 sec
ASCII readings to GPIB:	50/sec
Max. Internal Trigger Rate:	50/sec
Max. External Trigger Rate to Memory:	50/sec

[1] Specifications are for 1-hour warm-up at 100 PLC integration time, 3 Hz (Slow) ac filter, sinewave input.
[2] Relative to calibration standards.
[3] 20% overrange on all AC ranges, except 300V and 3A ranges which have 1% overrange.
[4] Values in the AC Characteristics Accuracy Specifications table are for sinewave inputs >5% of range (>15% of range for 300 VAC). For smaller inputs, add an additional error to the value in the table as follows:

		Additional Error Specifications to % Range Table Value for Sinewave Inputs:			
		1% to 5% of range		3% to 15% of range	
Function	Range	<50 kHz	>50 kHz	<50 kHz	>50 kHz
True RMS AC Voltage	100mV to 100V	add 0.1 to % of range	add 0.13 to % of range		
	300V			add 0.3 to % of range	add 0.4 to % of range
True RMS AC Current	1A and 3A	add 0.1 to % of range			

[5] 300 Vac range limited to 50 kHz. For frequencies >50 kHz, signals must be <1.5 x 107 Volt-Hz.
[6] For frequencies below 100 Hz, 3 Hz (Slow) AC filter specified for sinewave input only.
[7] For 1 kW unbalance in LO lead.
[8] Maximum reading rates for 0.01% of ac step additional error. Additional settling delay required when input dc level varies.
[9] For External Trigger or remote operation using default settling delay (Delay Auto).
[10] Maximum useful limit with default settling delays defeated.
[11] Speeds are for 0.02 PLC integration time, Delay 0, and 200 Hz (Fast) ac filter.

[12] 100Vac and 300Vac ranges may latch up the module or system mainframe if you drive the LO terminal with a high voltage, high frequency input. Only drive the HI terminal when measuring ac voltages.

Frequency and Period Characteristics

Accuracy Specifications ±(% of reading) [1] [4]

Function	Range [3]	Frequency	24 Hour [2] 23°C ± 1°C	90 Day 23°C ± 5°C	1 Year 23°C ± 5°C	Temperature Coefficient 0°C - 18°C 28°C - 55°C
Frequency, Period	100 mV to 300 V	3 Hz - 5 Hz	0.10	0.10	0.10	0.005
		5 Hz - 10 Hz	0.05	0.05	0.05	0.005
		10 Hz - 40 Hz	0.03	0.03	0.03	0.001
		40 Hz - 300 kHz	0.006	0.01	0.01	0.001

Additional Low-Frequency Errors (% of reading) [4]

	Integration Time (number PLCs)		
Frequency	**100 & 10**	**1 & 0.2**	**0.02**
3 Hz-5 Hz	0	0.12	0.12
5 Hz-10 Hz	0	0.17	0.17
10 Hz-40 Hz	0	0.2	0.2
40 Hz-100 Hz	0	0.06	0.21
100 Hz-300 Hz	0	0.03	0.21
300 Hz-1 kHz	0	0.01	0.07
>1 kHz	0	0	0.02

Measuring Characteristics

Frequency and Period

Measurement Method: Reciprocal-counting technique. AC-coupled input using the ac voltage measurement function.

Voltage Ranges: 100 mV rms full scale to 300V rms. Auto or manual ranges.

Gate Time: 10 ms, 100 ms or 1 second.

Settling Considerations

Errors will occur when attempting to measure the frequency or period of an input following a dc offset voltage change. The input blocking RC time constant must be allowed to adequately settle (up to 1 second) before the most accurate measurements are possible.

Measurement Considerations

All frequency counters are susceptible to error when measuring low-voltage, low-frequency signals. Shielding inputs from external noise pickup is critical for minimizing measurement errors.

Operating Characteristics [5]

Function	Integration Time	Readings/second
Frequency, Period	100	1
	1	9.8
	0.02	80

System Speeds [5]

Configuration Rates:	14/sec
Autorange Time:	<0.6 sec
Max. Internal Trigger Rate:	80/sec
Max. External Trigger Rate to Memory:	80/sec

[1] Specifications are for 1-hour warm-up at 100 PLC integration time.
[2] Relative to calibration standards.
[3] 20% overrange on all ranges, except 300Vac range which has 1% overrange.
[4] Input >100mV. For 10 mV input, multiply % of reading error x10.
[5] Speeds are for 0.02 PLC integration time, Delay 0 and 200Hz (Fast) ac filter.

General Specifications

Overvoltage Category 1 (1500V peak max impulse)

E1412A Available Power (Amps):

+5V:	Ipm (maximum peak current):	0.20A
	Idm (maximum dynamic current):	0.10A
+12V:	Ipm (maximum peak current):	0.70A
	Idm (maximum dynamic current):	0.06A

Cooling /Slot:	Average Watts/Slot:	9.40
	deltaP mm H2O:	0.05
	Air Flow liters/s:	0.80

Operating Environment: 0°C to 55°C
65% Relative Humidity to 40°C

NOTE: Recalibration may be required after exposure to humidity levels >65%.

Storage Environment: -40°C to 70°C

State Storage Memory: Power-off state automatically saved

Warm-up Time: 1 hour

Programming Language: SCPI-1993, IEEE-488.2

To Calculate Total Measurement Error

Each specification includes correction factors which account for errors present due to operational limitations of the multimeter. This section explains these errors and shows how to apply them to your measurements. Refer to the section titled “Interpreting Multimeter Specifications” to get a better understanding of the terminology used and to help you interpret the multimeter's specifications.

The multimeter's accuracy specifications are expressed in the form: (*% of reading* + *% of range*). In addition to the reading error and range error, you may need to add additional errors for certain operating conditions. Check the list below to make sure you include *all* measurement errors for a given function. Also, make sure you apply the conditions as described in the footnotes on the specification pages.

- If you are operating the multimeter outside the 23°C±5°C temperature range specified, apply an additional *temperature coefficient error*.
- For dc voltage, dc current, and resistance measurements, you may need to apply an additional *reading speed error* or *autozero OFF error*.
- For ac voltage and ac current measurements, you may need to apply an additional *low frequency error* or *crest factor error*.

Understanding the “% of reading” Error

The *reading error* compensates for inaccuracies that result from the function and range you select, as well as the input signal level. The reading error varies according to the input level on the selected range. This error is expressed in percent of reading. The following table shows the reading error applied to the multimeter's 24-hour dc voltage specification.

Range	Input Level	Range Error (% of range)	Range Error Voltage
10 Vdc	10 Vdc	0.0015	≤150 μV
10 Vdc	1 Vdc	0.0015	≤15 μV
10 Vdc	0.1 Vdc	0.0015	≤1.5 μV

Understanding the "% of range" Error

The *range error* compensates for inaccuracies that result from the function and range you select. The range error contributes a constant error, expressed as a percent of range, *independent* of the input signal level. The following table shows the range error applied to the multimeter's 24-hour dc voltage specification.

Range	Input Level	Range Error (% of range)	Range Error Voltage
10Vdc	10Vdc	0.0004	≤40μV
10Vdc	1Vdc	0.0004	≤40μV
10Vdc	0.1Vdc	0.0004	≤40μV

Total Measurement Error

To compute the total measurement error, add the reading error and range error. You can then convert the total measurement error to a "percent of input" error or a "ppm (part-per- million) of input" error as shown below.

$$\%\ of\ input\ error = \frac{Total\ Measurement\ Error}{Input\ Signal\ Level} \times 100$$

$$ppm\ of\ input\ error = \frac{Total\ Measurement\ Error}{Input\ Signal\ Level} \times 1,000,000$$

Error Example

Assume that a 5Vdc signal is input to the multimeter on the 10 Vdc range. Compute the total measurement error using the 90-day accuracy specifications: ±(0.0020% of reading + 0.0005% of range).

Reading error= 0.0020% x 5Vdc = 100mV

Range error= 0.0005% x 10Vdc = 50mV

Total error= 100mV + 50mV = ±150mV
= ±0.0030% of 5Vdc
= ±30 ppm of 5Vdc

Interpreting Multimeter Specifications

This section is provided to give you a better understanding of the terminology used and will help you interpret the multimeter's specifications.

Number of Digits and Overrange

The “number of digits” specification is the most fundamental, and sometimes, the most confusing characteristic of a multimeter. The number of digits is equal to the maximum number of “9's” the multimeter can measure or display. This indicates the number of *full digits*. Most multimeters have the ability to overrange and add a partial or “½” digit.

For example, the E1412A can measure 9.99999 Vdc on the 10V range. This represents six full digits of resolution. The multimeter can also overrange on the 10 V range and measure up to a maximum of 12.00000 Vdc. This corresponds to a 6½-digit measurement with 20% overrange capability.

Sensitivity

Sensitivity is the minimum level that the multimeter can detect for a given measurement. Sensitivity defines the ability of the multimeter to respond to small changes in the input level. For example, suppose you are monitoring a 1 mVdc signal and you want to adjust the level to within ±1 mV. To be able to respond to an adjustment this small, this measurement would require a multimeter with a sensitivity of at least 1 μV. You could use a 6½-digit multimeter if it has a 1 Vdc or smaller range. You could also use a 4½-digit multimeter with a 10 mVdc range.

Note that the smallest value that can be measured is different from the sensitivity for ac voltage and ac current measurements. For the E1412A, these functions are specified to measure down to 1% of the selected range. For example, the multimeter can measure down to 1 mVac on the 100 mVac range.

Resolution

Resolution is the numeric ratio of the maximum measurable value divided by the minimum measurable value on a selected range. Resolution is often expressed in percent, parts-per-million (ppm), counts, or bits. For example, a 6½-digit multimeter with 20% overrange capability can make a measurement with up to 1,200,000 counts of resolution. This corresponds to about 0.0001% (1 ppm) of full scale, or 21 bits including the sign bit. All four specifications are equivalent.

Accuracy

Accuracy is a measure of the “exactness” to which the multimeter's measurement uncertainty can be determined *relative to* the calibration reference used. Absolute accuracy includes the multimeter's relative accuracy specification plus the known error of the calibration reference relative to national standards (such as the U.S. National Institute of Standards and Technology). To be meaningful, the accuracy specifications must be accompanied with the conditions under which they are valid. These conditions should include temperature, humidity, and time.

There is no standard convention among multimeter manufacturers for the confidence limits at which specifications are set. The table below shows the probability of non-conformance for *each specification* with the given assumptions.

Specification Criteria	Probability of Failure
Mean ±2 sigma	4.5%
Mean ±3 sigma	0.3%
Mean ±4 sigma	0.006%

Variations in performance from reading to reading, and instrument to instrument, decrease for increasing number of sigma for a given specification. This means that you can achieve greater actual measurement precision for a specific accuracy specification number. The E1412A is designed and tested to meet performance better than mean ±4 sigma of the published accuracy specifications.

Transfer Accuracy

Transfer accuracy refers to the error introduced by the multimeter due to noise and short-term drift. This error becomes apparent when comparing two nearly-equal signals for the purpose of “transferring” the known accuracy of one device to the other.

24-Hour Accuracy

The 24-hour accuracy specification indicates the multimeter's relative accuracy over its full measurement range for short time intervals and within a stable environment. Short-term accuracy is usually specified for a 24-hour period and for a ±1°C temperature range.

90-Day and 1-Year Accuracy

These long-term accuracy specifications are valid for a 23°C ± 5°C temperature range. These specifications include the initial calibration errors plus the multimeter's long-term drift errors.

Temperature Coefficients

Accuracy is usually specified for a 23°C ± 5°C temperature range. This is a common temperature range for many operating environments. You must add additional temperature coefficient errors to the accuracy specification if you are operating the multimeter outside a 23°C ± 5°C temperature range.

Configuring for High Accuracy Measurements

The measurement configurations shown below assume that the multimeter is in its power-on or reset state. It is also assumed that manual ranging is enabled to ensure proper full scale range selection.

DC Voltage, DC Current, and Resistance Measurements:

- Set the resolution to 6 digits Fast (integration time of 10 PLC). You can use the 6 digits slow mode (integration time of 100 PLC) for further noise reduction.
- Set the input resistance to greater than 10 GΩ (for the 100 mV, 1 V, and 10 V ranges) for the best dc voltage accuracy.
- Use 4-wire ohms for the best resistance accuracy.
- Use Math Null to null the test cable resistance for 2-wire ohms, and to remove interconnection offset for
  dc voltage measurements.

AC Voltage and AC Current Measurements:

- Set the resolution to 6 digits (integration time of 100 PLC).
- Select the slow ac filter (3 Hz to 300 kHz).

Frequency and Period Measurements:

- Set the resolution to 6 digits (aperture time of 1 second).

B Keysight E1412A Multimeter Error Messages

The following sections describe the types of errors the Keysight E1412A report; Execution Errors, Self-Test Errors and Calibration Errors. The error code is given (e.g., -101) followed by the associated error message and a description of what the error message means.

Execution Errors

-101 Invalid character An invalid character was found in the command string. You may have inserted a character such as #, $, or % in the command header or within a parameter. Example: CONF:VOLT#DC

-102 Syntax error Invalid syntax was found in the command string. You may have inserted a blank space before or after a colon in the command header, or before a comma.. Examples: SAMP :COUN 1 or SAMP:COUN1

-103 Invalid separator An invalid separator was found in the command string. You may have used a comma instead of a colon, semicolon, or blank space – or you may have used a blank space instead of a comma. Example: TRIG:COUN,1 or CONF:FREQ 1000 0.1

-104 Data type error The wrong parameter type was found in the command string. You may have specified a number where a string was expected, or vice versa. Example: TRIG:COUN '150' or TRIG:COUN A

-105 GET not allowed A Group Execute Trigger (GET) is not allowed within a command string.

-108 Parameter not allowed More parameters were received than expected for the command. You may have entered an extra parameter, or you added a parameter to a command that does not accept a parameter. Example: READ? 10

-109 Missing parameter Fewer parameters were received than expected for the command. You omitted one or more parameters that are required for this command. Example: **SAMP:COUN**

-112 Program mnemonic too long A command header was received which contained more than the maximum 12 characters allowed. Example: CONFIGURATION:VOLT:DC

A <code> string contains more than the maximum 12 characters allowed in the CALibration:SECure:CODE command.

-113 Undefined header A command was received that is not valid for this multimeter. You may have misspelled the command or it may not be a valid command. If you are using the short form of the command, remember that it may contain up to four letters. Example: TRIGG:COUN 3

-121 Invalid character in number An invalid character was found in the number specified for a parameter value. Example: STAT:QUES:ENAB #B01010102

-123 Numeric overflow A numeric parameter was found whose exponent was larger than 32,000. Example: TRIG:COUN 1E34000

-124 Too many digits A numeric parameter was found whose mantissa contained more than 255 digits, excluding leading zeros.

-128 Numeric data not allowed A numeric parameter was found but a character string was expected. Check the list of parameters to verify you have used a correct parameter type. Example: TRIG:SOUR 1

-131 Invalid suffix A suffix was incorrectly specified for a numeric parameter. You may have misspelled the suffix. Example: TRIG:DEL 0.5 SECS

-138 Suffix not allowed A suffix was received following a numeric parameter which does not accept a suffix. Example: SAMP:COUN 1 SEC (SEC is not a valid suffix).

-148 Character data not allowed A character string was received but a numeric parameter was expected. Check the list of parameters to verify that you have used a valid parameter type. Example: CAL:LFR XYZ

-151 Invalid string data An invalid character string was received. Check to see if you have enclosed the character string in single or double quotes. Example: CAL:STR 'NEXT CAL DUE 10/4/1996(the ending quote is missing).

-158 String data not allowed A character string was received but is not allowed for the command. Check the list of parameters to verify that you have used a valid parameter type. Example: CALC:STAT 'ON'

-160 to -168 Block data errors The multimeter does not accept block data.

-170 to -178 Expression errors The multimeter does not accept mathematical expressions.

-211 Trigger ignored A Group Execute Trigger (GET) or *TRG was received but the trigger was ignored. Make sure the multimeter is in the "wait-for-trigger" state before issuing a trigger, and make sure the correct trigger source is selected.

-213 Init ignored An INITiate command was received but could not be executed because a measurement was already in progress. Send a device clear to halt a measurement in progress and place the multimeter in the "idle" state.

-214 Trigger deadlock A trigger deadlock occurs when the trigger source is BUS and a READ? command is received.

-221 Settings conflict This error can be generated in one of the following situations:

- You sent a CONFigure or MEASure command with autorange enabled and with a fixed resolution. Example: CONF:VOLT:DC DEF,0.1
- You turned math on (CALC:STAT ON) and then changed to a math operation that was not valid with the present measurement function.
- For example, dB measurements are not allowed with 2-wire ohms. The math state is turned off as a result of this condition.

-222 Data out of range A numeric parameter value is outside the valid range for the command. Example: TRIG:COUN -3

-223 Too much data A character string was received but could not be executed because the string length was more than 12 characters. This error can be generated by the CALibration:STRing and DISPlay:TEXT commands.

-224 Illegal parameter value A discrete parameter was received which was not a valid choice for the command. You may have used an invalid parameter choice. Examples: CALC:FUNC SCALE (SCALE is not a valid choice) or SAMP:COUN ON (ON is not a valid choice).

-230 Data stale A FETCh? command was received but internal reading memory was empty. The reading retrieved may be invalid or settings have changed since the data was taken.

-330 Self-test failed The multimeter's complete self-test failed from the remote interface (*TST? command). In addition to this error, more specific self-test errors are also reported. See also "Self-Test Errors," following this section.

-350 Too many errors The error queue is full because more than 20 errors have occurred.

No additional errors are stored until you remove errors from the queue. The error queue is cleared when power has been off, or after a *CLS (clear status) command has been executed.

-410 Query INTERRUPTED A command was received which sends data to the output buffer, but the output buffer contained data from a previous command (the previous data is not overwritten). The output buffer is cleared when power has been off, or after a *RST (reset) command has been executed.

-420 Query UNTERMINATED The multimeter was addressed to talk (i.e., to send data over the interface) but a command has not been received which sends data to the output buffer. For example, you may have executed a CONFigure command (which does not generate data) and then attempted an ENTER statement to read data from the remote interface.

-430 Query DEADLOCKED A command was received which generates too much data to fit in the output buffer and the input buffer is also full. Command execution continues but all data is lost.

-440 Query UNTERMINATED after indefinite response The *IDN? command must be the last query command within a command string. Example: *IDN?;:SYST:VERS?

501 Isolator UART framing error

502 Isolator UART overrun error

511 Unexpected reset occurred The outguard circuit recognized the inguard circuit reset (probably due to an abnormal input condition). This error causes the instrument to go to the power-on setting and the previous setting is lost.

521 Input buffer overflow

522 Output buffer overflow

531 Insufficient memory There is not enough memory to store the requested number of readings in internal memory using the INITiate command. The product of the sample count (SAMPle:COUNt) and the trigger count (TRIGger:COUNt) must not exceed 512 readings.

532 Cannot achieve requested resolution The multimeter cannot achieve the requested measurement resolution. You may have specified an invalid resolution in the CONFigure or MEASure command.

540 Cannot use overload as math reference The multimeter cannot store an overload reading (9.90000000E+37) as the math reference for null or dB measurements. The math state is turned off as a result of this condition.

This information is subject to change without notice.
© Keysight Technologies, 2019
Printed in Malaysia
Edition 3, August 2019



E1412-90011
www.keysight.com