Errata

Title & Document Type: 5342A Microwave Frequency Counter Operating and Service Manual

Manual Part Number: 05342-90057

Revision Date: February 1979

HP References in this Manual

This manual may contain references to HP or Hewlett-Packard. Please note that Hewlett-Packard's former test and measurement, semiconductor products and chemical analysis businesses are now part of Agilent Technologies. We have made no changes to this manual copy. The HP XXXX referred to in this document is now the Agilent XXXX. For example, model number HP8648A is now model number Agilent 8648A.

About this Manual

We've added this manual to the Agilent website in an effort to help you support your product. This manual provides the best information we could find. It may be incomplete or contain dated information, and the scan quality may not be ideal. If we find a better copy in the future, we will add it to the Agilent website.

Support for Your Product

Agilent no longer sells or supports this product. You will find any other available product information on the Agilent Test & Measurement website:

www.tm.agilent.com

Search for the model number of this product, and the resulting product page will guide you to any available information. Our service centers may be able to perform calibration if no repair parts are needed, but no other support from Agilent is available.

Agilent Technologies

OPERATING AND SERVICE MANUAL

MICROWAVE FREQUENCY COUNTER

5342A

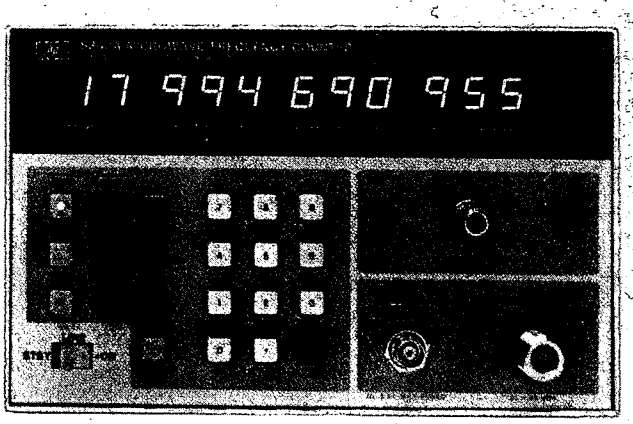

HEWLETT PACKARD

INSTALLATION/OPERATING NOTE

Revision A

HP 5342A MICROWAVE FREQUENCY COUNTER
ALL SERIAL PREFIXES
INSTALLATION OF FREQUENCY EXTENSION TO 24 GHz, OPTION 005

This Installation/Operating Note outlines the procedure for installing Option 005, P/N 05342-60206, Frequency Extension to 24 GHz for the 5342A. Option 005 consists of A12 IF Detector, P/N 05343-60009, U1 Sampler, P/N 5088-7052, and Label, P/N 5080-0106.

TOP COVER and A12 REMOVAL

To remove the top cover proceed as follows:

a. Place 5342A with top cover facing up.

b. At top rear of instrument, remove pozidrive screw from rear cap retainer and remove retainer.

c. Slide top cover back until free from frame and lift off.

d. To gain access to A12 remove screws from top front plate and remove plate.

e. Remove A12 board. Replace it with the 05343-60009 IF Detector Board.

BOTTOM COVER REMOVAL

To remove the bottom cover proceed as follows:

a. Place 5342A with bottom cover facing up.

CAUTION

Be careful when rotating the 5342A upside down. The PC board extractors may rotate and when the instrument is placed down, the extractor ring may break or bend.

Part Number: 05342-90057 **03/89-02/BK**

HEWLETT PACKARD

b. Remove two front plastic feet from bottom cover. Lift up on edge of plastic foot and push back on front edge of plastic foot to free foot from bottom cover.

c. Loosen captive pozidrive screw at rear edge of bottom cover.

d. Slide bottom cover back until it clears the frame. Reverse the procedure to replace the cover.

FRONT FRAME REMOVAL

To remove front frame from main housing of the instrument, proceed as follows:

a. Place 5342A with bottom cover facing up.

b. Remove locking nut from type N connector on front panel.

c. Remove two screws from front of each side strut attaching front panel frame.

d. From bottom front of instrument, disconnect coax cables from connectors A1J1 and A1J3.

e. Slowly slide front panel frame off while pressing type N connector rearward through panel.

f. The front panel frame (containing assemblies A1 and A2) can now be moved freely within limits of the power cable. It is recommended that you rotate the front panel frame and set it on the bottom of the instrument.

REMOVAL OF 5088-7022, U1 SAMPLER

To remove U1 Sampler, proceed as follows:

a. Disconnect rigid coax from U1 by loosening attaching nut.

b. Disconnect coax cable from A26J2.

c. Loosen 2 screws from A26 and 1 screw from U1. Do not remove screws.

d. Lift A26/U1 combination from A25 casting.

e. Separate A26 from U1 by loosening the interconnecting hex connector from U1.

f. Remove the bolt/nut from U1. Save this for use in the new sampler.

INSTALLING THE 5088-7052, U1 SAMPLER FOR OPTION 005

a. Inspect and clean U1 sampler connectors.

b. Install the bolt/nut which was removed from the old U1 onto the Option 005 sampler.

c. Connect U1 to A26. Do not tighten interconnecting hex connector at this time.

d. Place A26/U1 combination onto A25 casting. Do not tighten screws at this time.

e. Tighten A26 hex connector and screws on A26 and U1.

f. Connect coax cable from A5 to A26J2.

g. Connect rigid coax cable to U1J1. Do not tighten nut at this time.

FRONT FRAME, TOP COVER AND BOTTOM COVER INSTALLATION

Installation of front frame, top cover, and bottom cover is essentially the reverse of the disassembly.

TEST PROCEDURE

Specification: 18 GHz to 24 GHz, –15 dBm Sensitivity.

See *Figure 1* for the test setup and equipment list.

Apply –10 dBm to the 5342A and check its operation across the range of 18 to 24 GHz.

Measure the actual sensitivity at 18 GHz, 19 GHz, 20 GHz, 21 GHz, 22 GHz, 23 GHz, and 24 GHz and record for future reference. The sensitivity should exceed –15 dBm at all points.

TROUBLESHOOTING PROCEDURE

Failure of the 5342A Option 005 instrument to count above 18 GHz is likely due to sampler failure. Perform those tests as outlined in Table 8-5, page 8-85. Then perform the performance test as outlined in "TEST PROCEDURE" above. If the unit will not pass the performance test, replace the sampler. A new sampler, P/N 5088-7052, must be used as there is no blue stripe replacement.

Also, note that the A12 assembly used in Option 005 instruments is the 05343-60009. It is identical to the 05342-60012 assembly used in the standard 5342A, with one exception. The detection frequency range for the 05343-60009 is 32 to 126 MHz, as compared to the 05342-60012 of 48 to 102 MHz. Troubleshooting procedure is the same as for the standard 05342-60012 board.

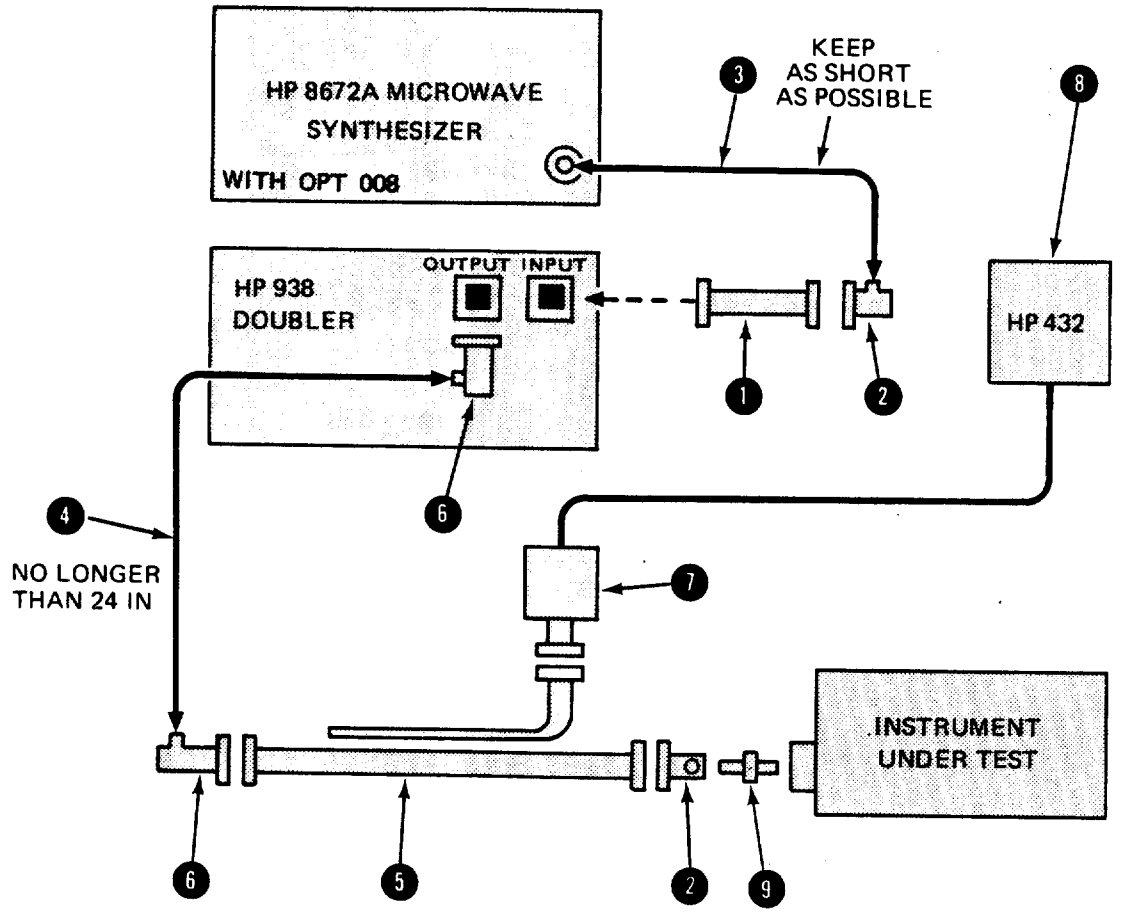

❶ Waveguide Extension/Flange Adapter, HP Model MX 292B.

❷ Waveguide to N Coax Adapter, HP Model X218A.

❸ RG 214/U Coax with N Connectors — made locally.

❹ Gore Tex cable GMCA-190-1/24. Specify crush resistant jacket. Available from W. L. Gore & Associates, 555 Papermill Road, P. O. Box 8734, Newark, Delaware 19711. A semirigid (RG-141/U with SMA connectors) assembly may be substitued — made locally.

❺ Waveguide 3 dB Coupler, HP Model K752A.

❻ SMA to Waveguide Adapter: Omni Spectra 2000-6256-00. Available from Omni Spectra, Inc., 24600 Hallwood Ct., Farmington, Mich. 48024.
Narda 4608B. Available from Narda Microwave Corp., 75M Commercial, Plain View, NY 11803.

❼ Thermistor Power Sensor, HP Model K486A.

❽ Power Meters, HP Model 432A or 432B or 432C.

❾ N-Male to N-Male Adapter, HP Model No. 1250-1472.

NOTE

Do not use any coax cable in place of item 9 due to excessive losses.

Figure 1. Test Setup and Equipment List

5342A
MICROWAVE FREQUENCY COUNTER

OPERATING AND SERVICE MANUAL

SERIAL PREFIX: 1840A

This manual applies to Serial Prefix 1840A, unless accompanied by a Manual Change Sheet indicating otherwise.

Copyright HEWLETT-PACKARD COMPANY 1979
5301 STEVENS CREEK BLVD., SANTA CLARA, CALIF. 95050

MANUAL PART NUMBER 05342-90013
Microfiche Part Number 05342-90014

Printed: FEB 1979

HEWLETT PACKARD

TABLE OF CONTENTS

Section	Title	Page
I	GENERAL INFORMATION	1-1
	1-1. Introduction	1-1
	1-3. Specifications	1-1
	1-5. Safety Considerations	1-3
	1-7. Instrument Identification	1-3
	1-9. Accessories	1-3
	1-11. Description	1-4
	1-13. Options	1-4
	1-15. Service Equipment Available	1-4
	1-17. Recommended Test Equipment	1-4
II	INSTALLATION	2-1
	2-1. Introduction	2-1
	2-3. Unpacking and Inspection	2-1
	2-5. Installation Requirements	2-1
	2-9. Power Cable	2-2
	2-11. Operating Environment	2-3
	2-15. Storage and Shipment	2-3
	2-16. Environment	2-3
	2-19. Packaging	2-3
	2-22. Field Installation of Options	2-3
	2-24. Part Numbers for Ordering Option Kits	2-4
	2-26. Installation of 10 MHz Oscillator Option 001	2-4
	2-28. Installation of Amplitude Measurement Option 002	2-4
	2-30. Installation of Extended Dynamic Range Option 003	2-7
	2-32. Installation of Digital-to-Analog Conversion (DAC) Option 004	2-7
	2-34. Installation of HP-IB Option 011	2-8
	2-36. HP-IB Interconnections	2-9
	2-39. 5342A Listen Address	2-9
	2-41. HP-IB Descriptions	2-9
III	OPERATION	3-1
	3-1. Introduction	3-1
	3-3. Operating Characteristics	3-1
	3-5. Operating Ranges	3-1
	3-7. Resolution Keys	3-1
	3-10. CHECK, DAC, and ENTER Keys	3-2
	3-12. FREQ Keys	3-2
	3014. Automatic Mode	3-2
	3-16. Manual Mode	3-2
	3-18. Offset Frequencies	3-2
	3-20. Amplitude and Offset Measurements	3-2
	3-22. Digital-to-Analog Converter (DAC) Operation	3-2
	3-24. SET, RESET, RECALL, and CHS Keys	3-2
	3-25. SAMPLE RATE, GATE, and REMOTE	3-2
	3-30. AM Tolerance	3-3
	3-32. FM Tolerance	3-3
	3-34. Automatic Amplitude Discrimination	3-3
	3-36. Maximum Input Signal Power	3-3
	3-39. Input Cable Considerations	3-4

TABLE OF CONTENTS (Continued)

Section	Title	Page
III	OPERATION (Continued)	
	3-41. Controls, Indicators, and Connectors	3-4
	3-43. Operating Procedures	3-4
	3-45. Operator Keyboard Check	3-14
	3-47. Error Code Displays	3-16
	3-49. Instrument Error Displays	3-16
	3-51. Operator Error Displays	3-17
	3-53. Limit Errors and Sequence Errors	3-18
	3-57. Options	3-18
	3-59. Time Base Option 001	3-18
	3-61. Amplitude Option 002	3-18
	3-63. Extended Dynamic Range Option 003	3-18
	3-65. HP-IB Interface Option 011	3-18
	3-67. Digital-to-Analog Converter (DAC) Option 004	3-19
	3-69. HP-IB Programming (Option 011)	3-19
	3-79. 9825A Program Examples	3-25
	3-81. HP-IB Programming Notes	3-28
	3-83. Remote Programming of Diagnostic Mode 6 (Option 002, 011 Only)	3-30
IV	PERFORMANCE TESTS	4-1
	4-1. Introduction	4-1
	4-3. Operational Verification	4-1
	4-5. Complete Performance Test	4-1
	4-7. Equipment Required	4-1
	4-9. Test Record	4-1
	4-11. Operational Verification Procedures	4-2
	4-12. Self-Check	4-2
	4-13. 10 Hz—500 MHz Input Sensitivity Test, 50Ω/1 MΩ (Standard and Option 003 Instruments Only)	4-2
	4-14. 10 Hz—500 MHz Input (50Ω) Minimum Level and Amplitude Accuracy Test (Option 002)	4-3
	4-15. 10 Hz—500 MHz Input (50Ω) Maximum Input Test (Option 002)	4-4
	4-16. 500 MHz-18 GHz Input Sensitivity Test (Standard and Option 003 Instruments Only)	4-5
	4-17. 500 MHz—18 GHz Input Minimum Level and Amplitude Accuracy Test (Option 002)	4-6
	4-18. 500 MHz—18 GHz High Level Test	4-7
	4-19. Option 011 HP-IB Verification Program	4-7
	4-27. Digital-to-Analog Converter (DAC) Output Test (Option 004)	4-16
	4-28. Performance Test Procedures	4-17
	4-29. 10 Hz—500 MHz Input Sensitivity Test, 50Ω (Standard and Option 003 Instruments Only)	4-17
	4-30. 10 Hz—500 MHz Input Sensitivity Test, 1 MΩ	4-18
	4-31. 500 MHz—18 GHz Input Sensitivity Test (Standard and Option 003 Instruments Only)	4-19
	4-32. 500 MHz—18 GHz Input SWR Test	4-20
	4-33. 500 MHz—18 GHz Maximum Input Test	4-22
	4-34. FM Tolerance Test	4-24
	4-35. Automatic Amplitude Discrimination Test	4-26

TABLE OF CONTENTS (Continued)

Section	Title	Page
IV	PERFORMANCE TESTS (Continued)	
	4-36. 500 MHz—18 GHz Input Minimum Level and Amplitude Accuracy Test (Option 002)	4-27
	4-37. 10 Hz—500 MHz Input (50Ω) Minimum Level and Amplitude Accuracy Test (Option 002)	4-28
	4-38. 10 Hz—500 MHz Input (50Ω) Maximum Input Test (Option 002)	4-29
	4-39. 10 Hz—500 MHz Input (50Ω) SWR Test (Option 002)	4-30
	4-40. Digital-to-Analog Converter (DAC) Output Test (Option 004)	4-31
V	ADJUSTMENTS	5-1
	5-1. Introduction	5-1
	5-4. Equipment Required	5-1
	5-6. Factory Selected Components	5-1
	5-8. Adjustment Locations	5-1
	5-10. Safety Considerations	5-1
	5-12. Adjustment Procedures	5-3
	5-13. Power Supply Adjustments	5-3
	5-17. Main Synthesizer Adjustment	5-4
	5-19. Offset Synthesizer Adjustments	5-5
	5-21. IF Adjustment	5-5
	5-28. Direct Count Adjustment	5-8
	5-30. Oscillator Adjustments	5-8
	5-31. A24 Standard Oscillator	5-8
	5-32. Option 001 Oven Oscillator (10544A)	5-9
	5-33. Option 002 Amplitude Measurement Adjustments	5-10
	5-34. A16 Adjustments	5-10
	5-38. A27 Adjustments (Resistors A27R9, A27R10)	5-11
	5-39. Option 002/003 Adjustments	5-12
	5-40. A11, A25 Adjustments (Resistors A11R14, A25R31)	5-12
	5-41. Option 004 Digital-to-Analog (DAC) Adjustments	5-13
VI	REPLACEABLE PARTS	6-1
	6-1. Introduction	6-1
	6-3. Exchange Assemblies	6-1
	6-5. Abbreviations and Reference Designations	6-1
	6-7. Replaceable Parts List	6-4
	6-11. Ordering Information	6-4
	6-14. Direct Mail Order System	6-4
	6-17. Option Retrofit Kits	6-4
VII	MANUAL CHANGES	7-1
	7-1. Introduction	7-1
	7-3. Manual Changes	7-1
	7-6. Older Instruments	7-1
VIII	SERVICE	8-1
	8-1. Introduction	8-1
	8-3. Schematic Diagram Symbols and Reference Designators	8-1
	8-5. Reference Designations	8-1

TABLE OF CONTENTS (Continued)

Section	Title		Page
VIII	SERVICE (Continued)		
	8-7.	Identification Markings on Printed-Circuit Boards	8-2
	8-11.	Assembly Identification	8-4
	8-13.	Safety Considerations	8-4
	8-18.	Safety Symbols	8-5
	8-20.	Signal Names	8-6
	8-22.	Disassembly and Reassembly	8-12
	8-24.	Top Cover Removal	8-12
	8-26.	Bottom Cover Removal	8-12
	8-28.	Front Frame Removal	8-12
	8-30.	Removal of A1 Display Assembly and A2 Display Assembly from Front Panel Frame	8-13
	8-32.	Replacement of LED's in Front Panel Switches	8-13
	8-34.	Removal of U1 Sampler, A25 Preamplifier, and A26 Sampler Driver	8-13
	8-36.	Factory Selected Components	8-15
	8-38.	Procedure for Selecting Resistor R15 on Direct Count Amplifier	8-15
	8-40.	Procedure for Selecting Resistor R16 for Capacitor C10 on Direct Count Amplifier A3	8-16
	8-42.	Procedures for Selecting Resistor R16 on Main Loop Amplifier A9	8-16
	8-44.	Procedure for Selecting Resistor A16R2 on A16 Assembly (Option 002 or 003)	8-17
	8-46.	Service Accessory Kit 10842A	8-18
	8-48.	Equipment Supplied	8-18
	8-50.	Replaceable Parts	8-18
	8-52.	Using ExtenderBoard 05342-60036	8-20
	8-58.	Logic Symbols	8-22
	8-60.	Logic Concepts	8-22
	8-62.	Negation	8-22
	8-64.	Logic Implementation and Polarity Indication	8-23
	8-73.	Other Symbols	8-25
	8-75.	Dependency Notation "C" "G" "V" "F"	8-26
	8-77.	Control Blocks	8-27
	8-79.	Complex Logic Devices	8-28
	8-81.	Theory of Operation	8-36
	8-83.	Harmonic Heterodyne Technique	8-36
	8-94.	HP 5342A Overall Operation	8-39
	8-99.	FM Tolerance	8-40
	8-101.	Automatic Amplitude Discrimination	8-40
	8-105.	Sensitivity	8-41
	8-110.	HP 5342A Block Diagram Description	8-42
	8-112.	Direct Count Section	8-42
	8-114.	Synthesizer Section	8-42
	8-116.	Main Loop Operation	8-42
	8-120.	Offset Loop Operation	8-43
	8-124.	IF Section	8-43
	8-126.	Time Base/PSR Section	8-46
	8-128.	Control Section	8-46
	8-130.	Detailed Theory of Operation	8-46

TABLE OF CONTENTS (Continued)

Section	Title	Page
VIII	SERVICE (Continued)	
8-132.	A1 Display Assembly and A2 Display Driver Assembly	8-46
8-138.	Keyboard Operation	8-47
8-145.	A3 Direct Count Amplifier Assembly	8-48
8-152.	A4 Offset VCO	8-49
8-154.	A5 RF Multiplexer Assembly	8-49
8-158.	A6 Offset Loop Amp/Search Generator Assembly	8-50
8-166.	A7 Mixer/Search Control Assembly	8-51
8-172.	A8 Main VCO Assembly	8-52
8-176.	A9 Main Loop Amplifier Assembly	8-53
8-181.	A10 Divide-by-N Assembly	8-53
8-190.	Two Modulus Prescaler Technique	8-55
8-198	Counter (Divider) Chain Utilizing 9's Complement	8-56
8-202.	A11 IF Limiter Assembly	8-57
8-206.	A12 IF Detector Assembly	8-57
8-215.	A13 Counter Assembly	8-59
8-225.	A14 Microprocessor Assembly	8-60
8-228.	Microprocessor Operation	8-60
8-240.	A15 Option 011 HP-IB Assembly	8-65
8-242.	A16 Option 002 Amplitude Measurements Assembly and A16 Option 003 Extended Dynamic Range Assembly	8-65
8-244.	A17 Timing Generator Assembly	8-65
8-247.	Pseudorandom Sequence Generation	8-65
8-257.	Gate Time Generation	8-67
8-262.	Sample Rate Generation	8-68
8-266.	A18 Time Base Buffer Assembly	8-68
8-269.	A19, A20, A21 Power Supply	8-69
8-278.	A22 Motherboard	8-71
8-280.	A23 Power Module	8-71
8-282.	A24 Oscillator Assembly	8-71
8-284.	A25 Preamplifier	8-71
8-290.	A26 Sampler Driver Assembly	8-72
8-294.	Options Theory (Options 002, 003, 004, and 011)	8-72
8-296.	Option 002 Amplitude Measurements Overall Theory	8-73
8-297.	Introduction	8-73
8-300.	Block Diagram	8-73
8-305.	Option 002 Detailed Theory	8-73
8-306.	U2 High Frequency Amplitude Assembly (5088-7035)	8-73
8-310.	A27 Low Frequency Amplitude Assembly	8-75
8-314.	A16 Amplitude Assembly	8-75
8-331.	Option 003 Extended Dynamic Range	8-77
8-340.	Option 004 Digital-to-Analog Conversion (DAC)	8-79
8-346.	Option 011 Hewlett-Packard Interface Bus (HP-IB)	8-80
8-347.	Introduction	8-80
8-349.	Interface Registers	8-80
8-358.	Command Decoding ROM's	8-81
8-366.	Acceptor Handshake	8-82
8-369.	Source Handshake	8-83
8-372.	Assembly Locations	8-84
8-374.	Troubleshooting to the Assembly Level (Standard Instrument)	8-84
8-375.	Troubleshooting Technique	8-84
8-379.	Recommended Test Equipment	8-85

LIST OF TABLES

Table	Title	Page
1-1.	Model 5342A Specifications	1-2
1-2.	Equipment Supplied	1-3
1-3.	Accessories Available	1-4
1-4.	Recommended Test Equipment	1-5
3-1.	HP-IB Interface Capability	3-19
3-2	5342A Bus Message Usage	3-20
3-3.	Address Selection	3-21
3-4.	Option 001 HP-IB Program Code Set	3-22
4-1.	Operational Verification Record	4-9
4-2.	Model 5342A Program	4-10
4-3.	Model 9825A Program Description	4-13
4-4.	Sample Printout	4-15
4-5.	Performance Test Record	4-32
5-1.	Adjustments	5-2
6-1.	Exchange Assemblies	6-1
6-2.	Abbreviations and Reference Designations	6-2
6-3.	Replaceable Parts	6-5
6-4.	Option 001 Replaceable Parts	6-37
6-5.	Option 002 Replaceable Parts	6-38
6-6.	Option 003 Replaceable Parts	6-41
6-7.	Option 004 Replaceable Parts	6-42
6-8.	Option 011 Replaceable Parts	6-44
6-9.	Manufacturers Code List	6-45
7-1.	Manual Backdating	7-1
8-1.	Assembly Identification	8-4
8-2.	Signal Names	8-6
8-3.	10842A Kit Contents	8-18
8-4.	Replaceable Parts for Extender Board 05342-60036	8-18
8-5.	Overall Troubleshooting	8-85
8-6.	Assemblies Tested by Test Mode	8-88
8-7.	Probable Failed Assemblies by Test Mode	8-89
8-8.	Diagnostic Modes of the 5342A	8-90
8-9.	A14 Microprocessor Troubleshooting	8-91
8-10.	A19, A20, A21 Power Supply Troubleshooting	8-97
8-11.	A1, A2 Keyboard/Display Troubleshooting	8-102
8-12.	A3 Direct Count Amplifier Troubleshooting	8-104
8-13.	A13 Counter Troubleshooting	8-105
8-14.	A17 Timing Generator Troubleshooting	8-109
8-15.	A8, A9, A10 Main Loop Snythesizer Troubleshooting	8-113
8-16.	A11, A12, A25, U1 IF Troubleshooting	8-116
8-17.	A4, A6, A7 Offset Loop Synthesizer Troubleshooting	8-122
8-18.	A26 Sampler Driver Troubleshooting	8-124
8-19.	A5 RF Multiplexer Troubleshooting	8-125
8-20.	Option 002 Amplitude Measurement Troubleshooting	8-127
8-21.	Option 001 HP-IB Troubleshooting	8-137
8-21A.	Acceptor Handshake (HP-IB)	8-137
8-21B.	Source Handshake (HP-IB)	8-138
8-21C.	U23, U26 ROM Table (HP-IB)	8-139

LIST OF FIGURES

Figure	Title	Page
1-1.	Model 5342A Microwave Frequency Counter	1-1
2-1.	Line Voltage Selection	2-1
2-2.	Power Cable HP Part Numbers versus Mains Plugs Available	2-2
2-3.	Hewlett-Packard Interface Bus Connection	2-10
3-1.	Front Panel Controls and Indicators	3-5
3-2.	Rear Panel Controls and Connectors	3-7
3-3.	Operating Procedures	3-8
3-4.	Amplitude Measurements (Option 002)	3-12
3-5.	DAC Operation (Option 004)	3-13
8-1.	Schematic Diagram Notes	8-3
8-2.	Front Frame, A25, A26, and U1 Removale	8-14
8-3.	10842A Service Accessory Kit	8-19
8-4.	Extender Board (05342-60036) Test Points R1, R2, and R3	8-20
8-5.	Extender Board (05342-60036) Schematic Diagram	8-21
8-6.	Harmonic Heterodyne Technique	8-37
8-7.	Frequency Relationships	8-38
8-8.	HP 5342A Simplified Block Diagram	8-39
8-9.	HP 5342A Block Diagram	8-44
8-10.	Block Diagram of Synthesizer Section	8-45
8-11.	Timing Diagram of A6 Search Generator Operation	8-51
8-12.	Data Transfer Timing in A10 Circuit	8-54
8-13.	0Filter Timing on A12 IF Detector	8-58
8-14.	A14U21 Expanded Block Diagram	8-61
8-15.	Memory Arrangement	8-64
8-16.	A19, A20, and A21 Power Supply Block Diagram	8-70
8-17.	Option 002 Amplitude Measurement Block Diagram	8-74
8-18.	Option 003 Extended Dynamic Range Block Daigram	8-78
8-19.	5342A Front (A1 Display) View	8-142
8-20.	5342A Rear View	8-143
8-21.	5342A Top View (Assembly Locations and Adjustments)	8-144
8-22.	5342A Bottom View, Options Installed	8-145
8-23.	5342A Detailed Block Diagram	8-147
8-24.	A1 Display Assembly and A2 Display Drive Assembly	8-149
8-25.	Option 004 Display Driver Additions on A2 Assembly	8-151
8-26.	A3 Direct Count Amplifier Assembly	8-153
8-27.	A4 Offset VCO Assembly	8-155
8-28.	A5 RF Multiplexer Assembly	8-157
8-29.	A6 Offset Loop Amp/Search Generator Assembly	8-159
8-30.	A7 Mixer/Search Control Assembly	8-161
8-31.	A8 Main VCO Assembly	8-163
8-32.	A9 Main Loop Amplifier Assembly	8-165
8-33.	A10 Divide-by-N Assembly	8-167
8-34.	A11 IF Limiter Assembly	8-169
8-35.	A12 IF Detector Assembly	8-171
8-36.	A13 Counter Assembly	8-173
8-37.	A14 Microprocessor Assembly	8-175
8-38.	Option 011 A15 HP-IB Assembly	8-177

LIST OF FIGURES (Continued)

Figure	Title	Page
8-39.	Option 002 A16 Amplitude Measurements, A27 Low Frequency Amplifier, and U2 High Frequency Amplifier Assemblies	8-179
8-40.	Option 003 A16 Extended Dynamic Range Assembly	8-181
8-41.	A17 Timing Generator Assembly	8-183
8-42.	A18 Time Base Buffer Assembly	8-185
8-43.	A19, A20, A21, and A23 Power Supply Assembly	8-187
8-44.	A24 Oscillator Assemblies	8-189
8-45.	A25 Preamplifier Assembly	8-191
8-46.	A26 Sampler Driver Assembly	8-193

SECTION I
GENERAL INFORMATION

1-1. INTRODUCTION

1-1. This manual provides operating and service information for the Hewlett-Packard Model 5342A Microwave Frequency Counter, shown in *Figure 1-1*.

1-3. SPECIFICATIONS

1-4. Specifications of the 5342A are listed in *Table 1-1*.

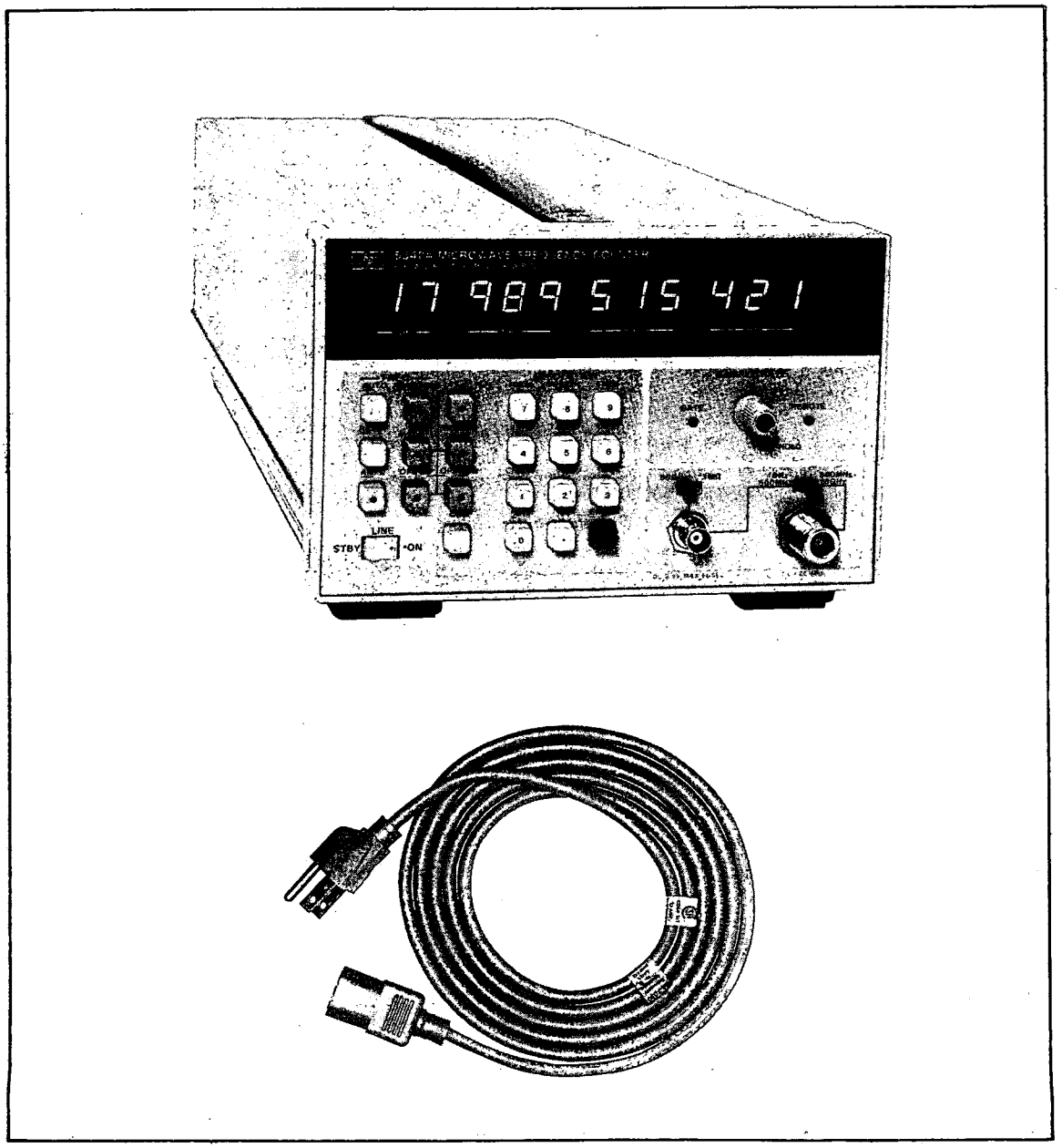

Figure 1-1. Model 5342A Microwave Frequency Counter

Table 1-1. Model 5342A Specifications

INPUT CHARACTERISTICS

INPUT 1:

Frequency range: 500 MHz to 18 GHz

Sensitivity:

500 MHz to 12.4 GHz −25 dBm
12.4 GHz to 18 GHz −20 dBm

Maximum input: +5 dBm (see Options 002, 003 for higher level).

Dynamic range:

500 MHz to 12.4 GHz 30 dB
12.4 GHz to 18 GHz 25 dB

Impedance: 50 ohms, nominal

Connector: Precision Type N female

Damage level: +25 dBm, peak

Coupling: dc to load, ac to instrument.

SWR:

<2:1, 500 MHz—10 GHz
<3:1, 10 GHz—18 GHz

FM tolerance: Switch selectable (rear panel)
FM (wide): 50 MHz p-p worst case.
CW (normal): 20 MHz p-p worst case.
For modulation rates from dc to 10 MHz.

AM tolerance: Any modulation index provided the minimum signal level is not less than the sensitivity specification.

Automatic amplitude discrimination: Automatically measures the largest of all signals present, providing that signal is 6 dB above any signal within 500 MHz; 20 dB above any signal, 500 MHz—18 GHz.

Modes of operation:

Automatic: Counter automatically acquires and displays highest level signal within sensitivity range.
Manual: Center frequency entered to within ±50 MHz to true value.

Acquisition time:

Automatic mode: Normal FM 530 ms worst case; wide FM 2.4 s worst case.
Manual mode: 80 ms after frequency entered.

INPUT 2:

Frequency range: 10 Hz to 520 MHz Direct Count.

Sensitivity:

50Ω 10 Hz to 520 MHz 25 mV rms.
1 MΩ 10 Hz to 25 MHz 50 mV rms.

Impedance: Selectable: 1 MΩ, <50 pF or 50Ω nominal.

Coupling: ac

Connector: Type BNC female.

Maximum input: 50Ω 3.5V rms (+24 dBm) or 5V dc fuse protected; 1 MΩ 200V dc +5.0V rms.

TIME BASE

Crystal frequency: 10 MHz

Stability:

Aging rate: $<1 \times 10^{-7}$ per month.
Short term: $<1 \times 10^{-9}$ for 1 second average time.
Temperature: $<\pm 1 \times 10^{-6}$ over the range 0°C to 50°C.
Line variation: $<\pm 1 \times 10^{-7}$ for 10% change from nominal.

Output frequency: 10 MHz ≥2.4V square wave (TTL compatible); 1.5V peak-to-peak into 50Ω available from rear panel BNC.

External time base: Requires 10 MHz, 2.0V peak-to-peak sine wave or square wave into 1 KΩ via rear panel BNC connector. Switch selects either internal or external time base.

OPTIONAL TIME BASE (OPTION 001)

Option 001 provides an oven-controlled crystal oscillator time base, 10544A (see separate data sheet), that results in better accuracy and longer periods between calibration.

Crystal frequency: 10 MHz

Stability:

Aging rate: $<5 \times 10^{-10}$/day after 24-hour warm-up.
Temperature: $<7 \times 10^{-9}$ over the range 0°C to 50°C.
Short term: $<1 \times 10^{-11}$ for 1 second average time.
Line variation: $<1 \times 10^{-10}$ for 10% change from nominal.
Warm-up: $<5 \times 10^{-9}$ of final value 20 minutes after turn-on, at 25°C.

AMPLITUDE MEASUREMENT (OPTION 002)

Option 002 provides the capability of measuring the amplitude of the incoming sine wave signal, and simultaneously displaying its frequency (MHz) and level (dBm). The maximum operating level and the top end of dynamic range are increased to +20 dBm. Amplitude offset to 0.1 dB resolution may be selected from front panel pushbuttons.

INPUT 1:

Frequency range: 500 MHz—18 GHz.

Dynamic range (frequency and level):

−22 dBm to +20 dBm 500 MHz to 12.4 GHz
−15 dBm to +20 dBm 12.4 GHz to 18 GHz

Maximum operating level: +20 dBm

Damage level: +25 dBm, peak

Resolution: 0.1 dB

Accuracy: ±1.5 dB (excluding mismatch uncertainty).

SWR:

<2:1 (amplitude measurement).
<5:1 (frequency measurement).

Measurement time: 100 ms + frequency measurement time.

Display: Simultaneously displays frequency to 1 MHz resolution and input level. (Option 011 provides full frequency resolution on HP-IB output.)

INPUT 2: (50Ω impedance only)

Frequency range: 10 MHz—520 MHz

Dynamic range (frequency and level):

−17 dBm to +20 dBm.

Damage level: +24 dBm, peak

Resolution: 0.1 dBm.

Accuracy: 1.5 dB (excluding mismatch uncertainty).

SWR: <1.8:1

Measurement time: 100 ms + frequency measurement time.

Display: Simultaneously displays frequency to 1 MHz resolution and input level.

Table 1-1. Model 5342A Specifications (Continued)

EXTENDED DYNAMIC RANGE (OPTION 003)

Option 003 provides an attenuator that automatically extends the dynamic range of operation for input 1.

INPUT 1:

Frequency range: 500 MHz to 18 GHz
Sensitivity:
500 MHz to 12.4 GHz −22 dB
12.4 GHz to 18 GHz −15 dBm
Maximum operating level: +20 dBm.
Dynamic range:
500 MHz to 12.4 GHz 42 dB
12.4 GHz to 18 GHz 35 dB
Damage level: +25 dBm, peak
SWR: <5:1

DIGITAL-TO-ANALOG CONVERTER (OPTION 004)

Option 004 provides the ability to convert any three consecutive displayed digits into an analog voltage output. A display of ØØØ produces ØV output; 999 produces 9.99V full scale.
Accuracy: ±5 mV, ±0.3 mV/°C (from 25°C)
Conversion Speed: <50 μs to ±0.01% of full scale reading.
Resolution: 10 mV
Output: 5 mA. Impedance <1.0 ohm.
Connector: Type BNC female on rear panel.

GENERAL

Accuracy: ±1 count ± time base error.
Resolution: Front panel pushbuttons select 1 Hz to 1 MHz.
Residual stability: When counter and source use common time base or counter uses external higher stability time base, $<4 \times 10^{-11}$ rms typcial.
Display: 11-digit LED display, sectionalized to read GHz, MHz, kHz, and Hz.
Self-check: Selected from front panel pushbuttons. Measures 75 MHz for resolution chosen.
Frequency offset: Selected from front panel pushbuttons. Displayed frequency is offset by entered value to 1 Hz resolution.
Sample rate: Variable from less than 20 ms between measurements to HOLD which holds display indefinitely.
IF out: Rear panel BNC connector provides 25 MHz to 125 MHz output of down-converted microwave signal.
Operating temperature: 0°C to 50°C.
Power requirements: 100/120/220/240V rms, +5%, −10%, 48—66 Hz; 100 VA max.
Accessories furnished: Power cord, 229 cm (7½ ft.)
Size: 133 mm H × 213 mm W × 498 mm D (5¼" × 8⅜" × 19⅝").
Weight: Net 9.1 kg (20 lbs.).
Shipping 12.7 kg (28 lbs.).

1-5. SAFETY CONSIDERATIONS

1-6. This product is a Safety Class I instrument (provided with a protective earth terminal). Safety information pertinent to the operation and servicing of this instrument is included in appropriate sections of this manual.

1-7. INSTRUMENT IDENTIFICATION

1-8. Hewlett-Packard instruments have a 2-section, 10-character serial number (0000A00000), which is located on the rear panel. The four-digit serial prefix identifies instrument changes. If the serial prefix of your instrument differs from that listed on the title page of this manual, there are differences between this manual and your instrument. Instruments having higher serial prefixes are covered with a "Manual Changes" sheet included with this manual. If the change sheet is missing, contact the nearest Hewlett-Packard Sales and Service Office listed at the back of this manual. Instruments having a lower serial prefix than that listed on the title page, are covered in Section VII.

1-9. ACCESSORIES

1-10. *Table 1-2* lists accessory equipment supplied and *Table 1-3* lists accessories available.

Table 1-2. Equipment Supplied

DESCRIPTION	HP PART NUMBER
Detachable Power Cord 229 cm (7½ feet long)	8120-1378

Table 1-3. Accessories Available

DESCRIPTION	HP PART NUMBER
Bail Handle Kit	5061-2002
Rack Mounting Adapter Kit (Option 908)	5061-0057
Rack Mounting Adapter Kit with slot for access to front connectors from rear.	K70-59992A
Transit Case	9211-2682
Service Accessory Kit (refer to paragraph 1-16)	Model 10842A
Microwave Attenuators	Model 8491B, 8494/5/6H
Signature Analyzer	Model 5004A

1-11. DESCRIPTION

1-12. The 5342A Microwave Frequency Counter measures the frequency of signals in the range of 10 Hz to 18 GHz, with a basic sensitivity of –25 dBm. Signals in the frequency range of 10 Hz to 500 MHz are measured by the direct count method. Signals in the frequency range of 500 MHz to 18 GHz are down-converted to an IF by a heterodyne conversion technique for application to the counter circuits. The unique conversion technique employed results in high sensitivity and FM tolerance in addition to automatic amplitude discrimination. The counted IF is added to the local oscillator frequency to determine the unknown frequency for display.

1-13. OPTIONS

1-14. Options available with the 5342A are described in *Table 1-1* and paragraph 3-57. If an option is included in the initial order, it will be installed at the factory and ready for operation upon receipt. If an option is ordered for field installation it will be supplied as a retrofit kit. Refer to Section II for kit part numbers and installation instructions.

1-15. SERVICE EQUIPMENT AVAILABLE

1-16. Extender boards are available for servicing printed circuit assemblies while extended from the instrument. The extender boards allow assemblies to be extended from their plug-in connectors for monitoring with appropriate test equipment. Extender boards for each assembly are supplied in Service Accessory Kit 10842A as described in paragraph 8-46.

1-17. RECOMMENDED TEST EQUIPMENT

1-18. The test equipment listed in *Table 1-4* is recommended for use during performance tests, adjustments, and troubleshooting. Substitute test equipment may be used if it meets the required characteristics listed in the table.

Table 1-4. Recommended Test Equipment

INSTRUMENT	REQUIRED CHARACTERISTICS	USE*	RECOMMENDED MODEL
Oscilloscope	100 MHz bandwidth	T,A,OV,P	HP 1740A
Signal Generator	10 Hz—10 MHz 10 MHz—2.4 GHz 2 GHz—18 GHz	T,A,OV,P	HP 651B HP 8620C/86222A HP 8620C/86290A
Spectrum Analyzer	RF inputs from 1 MHz—500 MHz	T,A,P	HP 141T/8552A/8554B
DC Voltmeter	20V Range, 0.05V Resolution	T,A	HP 3465A
AC Voltmeter	10 MHz-350 MHz	T,A	HP 3406A
AC Voltmeter	100 kHz, 1% accuracy	A (Opt. 002)	HP 3400A
Logic State Analyzer	HP 1740A compatibility	T	HP 1607A (use with HP 1740A)
Signature Analyzer	5342A compatibility	T	HP 5004A
Power Splitter	DC—18 GHz	OV,P	HP 11667A
Logic Pulser	TTL compatibility	T	HP 546A
Current Tracer	1 mA—1 A range	T	HP 547A
Logic Probe	TTL compatibility	T	HP 545A
Step Attenuator	DC—18 GHz 10 dB steps	OV,P	HP 8495B
AP Clips (4)	Clip for 14 pin/16 pin IC's	T	HP P/N 1400-0734
Isolation Transformer	120V IN — Isolated 120V OUT	T	Allied Electronics P/N 705-0048
Extender Boards	2 × 10 pin 2 × 12 pin 2 × 15 pin 2 × 18 pin (2) 2 × 22 pin (2) 2 × 24 pin A 14 Extender A15 Extender	T	HP P/N 05342-60030 HP P/N 05342-60031 HP P/N 05342-60032 HP P/N 05342-60033 HP P/N 05342-60034 HP P/N 05342-60035 HP P/N 05342-60036 HP P/N 05342-60039
Power Meter	10 MHz—18 GHz	A,OV,P	HP 436A
Power Sensor	10 MHz—18 GHz -30 dBm to +20 dBm	A,OV,P	HP 8481A
50Ω Termination	DC—18 GHz	P	HP 909A (Option 012)
Microwave Amplifier	1 GHz, >+20 dBm Output	P (Opt. 002)	HP 489A
Signal Generator	100 MHz, +20 dBm	A (Opt. 002)	HP 8601A
Signal Generator	>100 MHz, >+20 dBm	P,OV, (Option 002)	HP 3312A
Swept Frequency Analyzer	100 MHz—18 GHz	P	HP 8755B
15 MHz—18 GHz Modulator	HP 8755B compatibility	P	HP 11665B
15 MHz-18 GHz Detectors (2 required)	0.1—18 GHz	P	HP 11664A
Oscilloscope Mainframe	HP 8755B compatibility	P	HP 182T
Directional Coupler	2—18 GHz	P	HP 11692D
Directional Coupler	100—500 MHz	P	HP 778D
Signal Generator Mainframe	(Two Microwave sources needed for automatic amplitude discrimination test — see paragraph 4-35)	P	HP 8620C Mainframe
Bus System Analyzer	Control HP-IB lines	T (Opt. 011)	HP 59401A

*T = Troubleshooting
A = Adjustments
OV = Operational Verification
P = Full Performance Testing

SECTION II
INSTALLATION

2-1. INTRODUCTION

2-2. This section contains information for unpacking, inspection, storage, and installation.

2-3. UNPACKING AND INSPECTION

2-4. If the shipping carton is damaged, inspect the instrument for visible damage (scratches, dents, etc.). If the instrument is damaged, notify the carrier and the nearest Hewlett-Packard Sales and Service Office immediately (offices are listed at the back of this manual). Keep the shipping carton and packing material for the carrier's inspection. The Hewlett-Packard Sales and Service Office will arrange for repair or replacement of your instrument without waiting for the claim against the carrier to be settled.

2-5. INSTALLATION REQUIREMENTS

CAUTION

Before connecting the instrument to ac power lines, be sure that the voltage selector is properly positioned as described below.

2-6. LINE VOLTAGE REQUIREMENTS. The 5342A is equipped with a power module that contains a printed-circuit line voltage selector to select 100- 120-, 220-, or 240-volt ac operation. Before applying power, the pc selector must be set to the correct position and the correct fuse must be installed as described below.

2-7. Power line connections are selected by the position of the plug-in circuit card in the module. When the card is plugged into the module, the only visible markings on the card indicate the line voltage to be used. The correct value of line fuse, with a 250-volt rating, must be installed after the card is inserted. This instrument uses a 0.75A fuse (HP Part No. 2110-0360) for 100/120-volt operation; a 0.375A fuse (HP Part No. 2110-0421) for 220/240-volt operation.

2-8. To convert from one line voltage to another, the power cord must be disconnected from the power module before the sliding window covering the fuse and card compartment can be moved to expose the fuse and circuit card. See *Figure 2-1.*

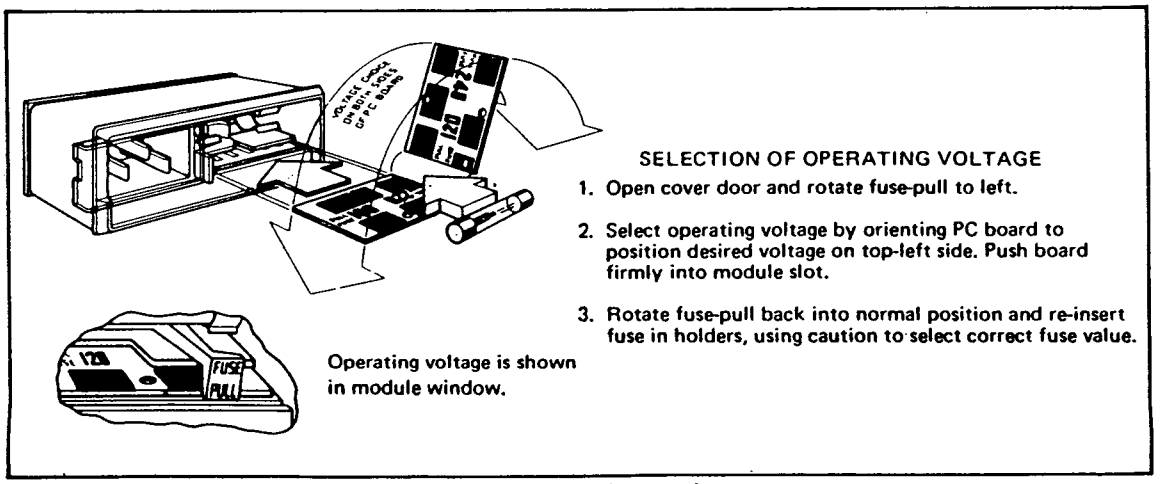

Figure 2-1. Line Voltage Selection

2-9. Power Cable

2-10. The 5342A is shipped with a three-wire power cable. When the cable is connected to an appropriate ac power source, this cable connects the chassis to earth ground. The type of power cable plug shipped with each instrument depends on the country of destination. Refer to *Figure 2-2* for the part numbers of the power cable and plug configurations available.

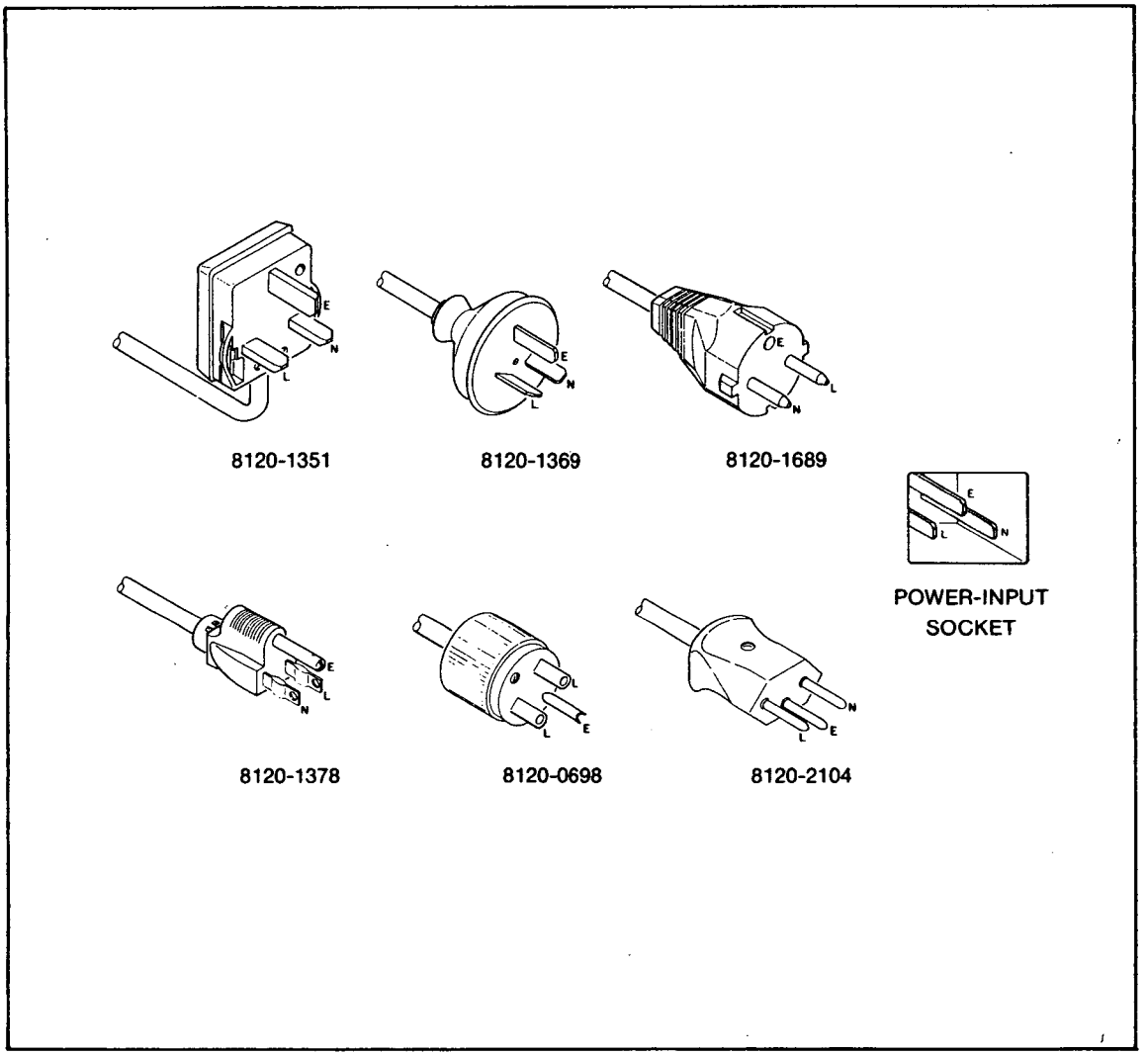

Figure 2-2. Power Cable HP Part Numbers versus Mains Plugs Available

WARNING

BEFORE SWITCHING ON THIS INSTRUMENT, THE PROTECTIVE EARTH TERMINALS OF THIS INSTRUMENT MUST BE CONNECTED TO THE PROTECTIVE CONDUCTOR OF THE (MAINS) POWER CORD. THE MAINS PLUG SHALL ONLY BE INSERTED IN A SOCKET OUTLET PROVIDED WITH A PROTECTIVE EARTH CONTACT. THE PROTECTIVE ACTION MUST NOT BE NEGATED BY THE USE OF AN EXTENSION CORD (POWER CABLE) WITHOUT A PROTECTIVE CONDUCTOR (GROUNDING).

2-11. Operating Environment

2-12. TEMPERATURE. The 5342A may be operated in temperatures from 0°C to +55°C.

2-13. HUMIDITY. The 5342A may be operated in environments with humidity up to 95%. However, it should be protected from temperature extremes which cause condensation in the instrument.

2-14. ALTITUDE. The 5342A may be operated at altitudes up to 4,600 metres (15,000 feet).

2-15. STORAGE AND SHIPMENT

2-16. Environment

2-17. The instrument may be stored or shipped in environments within the following limits:

TEMPERATURE	−40°C to +75°C
HUMIDITY	Up to 95%
ALTITUDE	7,620 metres (25,000 feet)

2-18. The instrument should also be protected from temperature extremes which cause condensation within the instrument.

2-19. Packaging

2-20. ORIGINAL PACKAGING. Containers and materials identical to those used in factory packaging are available through Hewlett-Packard offices. If the instrument is being returned to Hewlett-Packard for servicing, attach a tag indicating the type of service required, return address, model number, and full serial number. Also, mark the container FRAGILE to ensure careful handling. In any correspondence, refer to the instrument by model number and full serial number.

2-21. OTHER PACKAGING. The following general instructions should be used for repacking with commercially available materials:

a. Wrap instrument in heavy paper or plastic. (If shipping to Hewlett-Packard office or service center, attach tag indicating type of service required, return address, model number, and full serial number.)

b. Use strong shipping container. A double-wall carton made of 350-pound test material is adequate.

c. Use a layer of shock-absorbing material 70 to 100 mm (3- to 4-inch) thick around all sides of the instrument to provide firm cushioning and prevent movement inside container. Protect control panel with cardboard.

d. Seal shipping container securely.

e. Mark shipping container FRAGILE to ensure careful handling.

f. In any correspondence, refer to instrument by model number and full serial number.

2-22. FIELD INSTALLATION OF OPTIONS

2-23. Procedures for field installation of Options 001, 002, 003, 004, and 011 are described in the following paragraphs.

2-24. Part Numbers for Ordering Option Kits

2-25. To obtain the necessary parts for installation of an option, order by part number as listed below (refer to Section VI for ordering information):

Option	Name	Part Number
001	High Stability Time Base	HP Model 10544A
002	Amplitude Measurement	05342-60200 (Kit)
003	Extended Dynamic Range	05342-60201 (Kit)
*004	Digital-to-Analog Converter	05342-60202 (Kit)
0011	HP-IB I/O	05342-60019 (HP-IB Assy.) 05342-60029 (HP-IB Input Assy.)

***NOTE**

If the instrument in which Option 004 is to be installed has a series number 1812 or lower, the U7 ROM on A14 Microprocessor will have to be replaced. Order U7 ROM Part Number 1818-0706 to replace the old U7 ROM (1818-0331).

2-26. Installation of 10 MHz Oscillator Option 001

2-27. Option 001 consists of oven-controlled crystal oscillator time base 10544A, which has a pc card connector. Option 001 is installed in the same connector on the motherboard as the standard oscillator (A24). See *Figure 8-44.* To install Option 001, proceed as follows:

a. Remove the standard oscillator from A24 connector.

b. Install Option 001 oscillator into A24 connector.

c. Attach Option 001 oscillator to the motherboard by means of two 6/32 × 5/16 pan head screws. Install the screws from the bottom of the motherboard using star washers.

d. Perform Option 001 oscillator adjustment as described in paragraph 5-32.

2-28. Installation of Amplitude Measurement Option 002

2-29. Option 002 consists of U2 High Frequency Amplitude assembly and A27 Low Frequency Amplitude Assembly modules and the A16 Amplitude Assembly pc board. U2 is connected to the high frequency input of the 5342A, A27 is connected to the low frequency input and both of the modules are connected to the A16 board by the coax wires supplied. See photo of installed option, *Figure 8-22,* and schematic diagram, *Figure 8-39.* To install the components proceed as follows:

NOTE

The parts that comprise this option are listed in *Table 6-5.*

a. Remove the top and bottom covers and top plate from instrument.

b. Place instrument top down.

c. At inside front panel, disconnect cables from A1J1, J1J3, J25J1 (IF OUT INT), and A25J2 (IF OUT EXT).

d. Solder one end of the white/red/green 14-inch wire (8120-0483) to AT1 feedthrough capacitor terminal on A25 Preamplifier assembly.

e. Install coax assembly 8120-2268 through A22 motherboard from top of instrument at A16 slot. Place the wires through the holes as shown below:

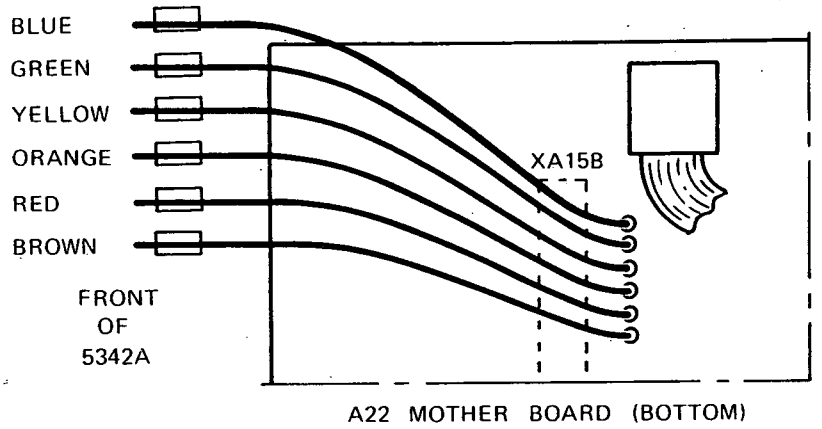

NOTE

Prior to installing A27 Low Frequency Amplitude Assembly, connect the wires as described below.

f. Solder one end of the black/white/blue 14-inch wire (8120-0471) to C7 feedthrough capacitor terminal on A27.

g. Place heat shrinkable tubing (0890-0983) over connection at C7.

h. Place heat shrinkable tubing (0890-0983) over three of the coax wires (red, blue, and green) that were installed in step e. and solder these wires to the terminals listed below:

Coax	**Terminal**
Red	A27C10
Blue	A27C9
Green	A27C8

i. Apply heat to shrink the tubing at the connections made in step g and h.

j. Remove attaching nut from front panel N-type input connector and disconnect rigid coax W1 from J1 on U1 Sampler. Remove W1 from instrument.

k. Mount A27 Low Frequency Amplitude Assembly in the recessed angle of the casting behind front frame, see *Figure 8-22*. Attach A27 to casting with two pan head screws supplied. Place a star washer under the other screw.

l. The wire previously soldered to A27C10 has a black ground wire attached. Solder the end of this black wire to the ground lug installed in preceding step.

m. Solder the free end of white/red/green wire (other end connected to A25AT1 in step d) to A22 motherboard at XA16B, pin 3 (ATT).

NOTE

Prior to installing U2 High Frequency Amplitude Assembly, connect the color-coded wires as shown below. Place heat shrinkable tubing (0890-0983 for coax and 0890-0706 for single wires) over all connections to U2.

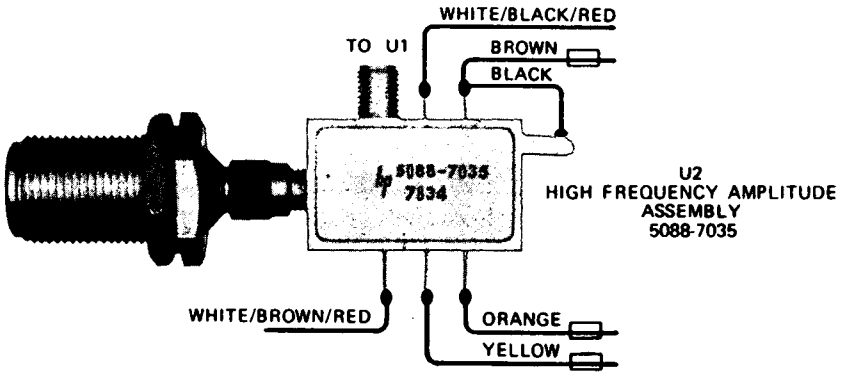

n. Connect rigid coax (8120-2516) from U2 High Frequency Amplitude Assembly to J1 on Sampler U1. Install U2 input connector through front panel. Fasten with attaching nut.

o. Solder white/black/red wire (from U2) to A22 motherboard XA16B, pin $\overline{3}$.

p. Solder white/brown/red wire (from U2) to A22 motherboard XA16B, pin $\overline{4}$.

q. Harness the coax cables and wires with tie wraps supplied.

r. Connect cable 05342-60119 from A27J1 to A1J3.

s. Connect cable A1J3/A27J2 to A27J2.

t. Reconnect A1J1, J1 (IF OUT INT) and J2 (IF OUT EXT) and harness with tie wrap.

u. Harness the white cables with tie wraps supplied.

NOTE

The ROM and U2 High Frequency Amplitude Assembly are supplied as a matched pair and are included under one replaceable part number (05342-80005).

v. Install the ROM (supplied with option) into U3 socket on A16 (05342-60038) board.

w. Replace resistor R2 on A16 board with a resistor of the value labeled on U2 assembly.

x. Insert the plug of 8120-2268 cable into mating socket on A16 board (05342-60038) and install A16 into connector XA16.

y. Perform the Option 002 adjustments listed under paragraph 5-33 through 5-39 of this manual.

z. Perform the operational verification procedures in paragraphs 4-14, 4-15, and 4-17 of this manual.

NOTE

If the instrument does not meet the specified accuracy of ±1.5 dB as described in paragraph 4-14, perform the following procedures.

Replace resistor R6 from the A27 Low Frequency Amplitude Assembly and replace with a resistor of a higher or lower value as shown below. For lower power readings increase the value and for higher power readings decrease the value of resistor R6 as follows:

dB Change	R6 Changes (ohms)
0.2	10
0.4	20
0.6	30
0.8	40
1.0	50

2-30. Installation of Extended Dynamic Range Option 003

2-31. Option 003 consists of A16 Extended Dynamic Range Assembly (05342–60037) and U2 Attenuator Assembly (5088–7038). See *Figure 8-22* for location of U2 (Option 002 or 003).

NOTE

The parts that comprise this option are listed at the end of *Table 6-6*.

a. Remove the top and bottom covers and top plate from instrument.

b. Place instrument top down.

c. At inside front panel, disconnect cable from A1J1, A1J3, A25J1 (IF OUT INT), and A25J2 (IF OUT EXT).

d. Solder one end of the white/red/green 14-inch wire (8120-0483) to AT1 feedthrough capacitor terminal on A25 Preamplifier Assembly.

NOTE

Prior to installing U2 (5088-7038) assembly, connect the color-coded wires as shown below. Place heat shrinkable tubing (0890-0706) over the connections and apply heat.

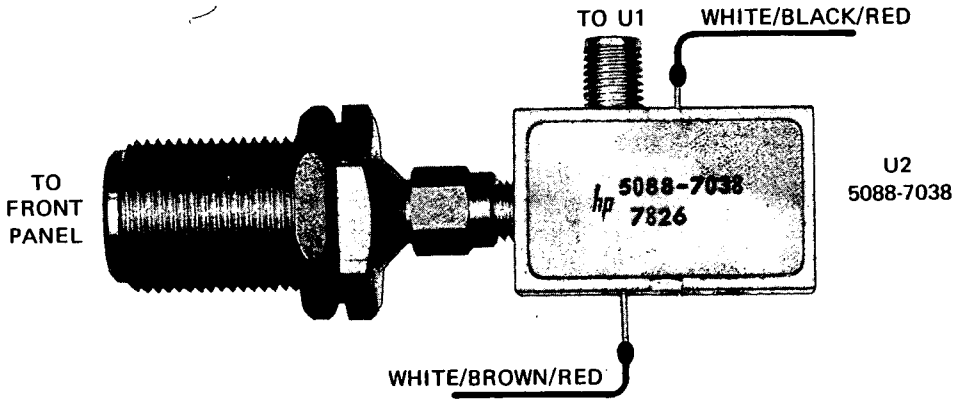

e. Solder free end of white/red/green wire (other end connected to A25AT1 in step d) to A22 Motherboard at XA16B, pin 3 (ATT).

f. Solder white/black/red wire (from U2) to A22 Motherboard XA16B, pin $\overline{3}$.

g. Solder white/brown/red wire (from U2) to A22 Motherboard XA16B, pin $\overline{4}$.

h. Remove the N-type input connector from front panel and replace with U2 (5088-7038).

i. Connect rigid coax (supplied) from U2 to J1 on Sampler U1.

j. Install A16 board (05342–60037) into XA16 connector.

k. Perform the operational verification procedures in paragraphs 4-13 and 4-16 of this manual.

2-32. Installation of Digital-to-Analog Conversion (DAC) Option 004

2-33. Option 004 consists of an A2 Display Driver Assembly (05342–60028) that contains DAC circuitry added to the standard A2 circuit. Interconnecting wires are included with the Option 004 retrofit kit (05342–60202). Procedures for installation of Option 004 are as follows:

a. Remove top and bottom covers, front frame and A1–A2 assemblies. Refer to disassembly procedures, paragraph 8-22.

b. Replace the original A2 board (05342-60002) with Option 004 A2 board (05342-60028) and reassemble unit.

c. If the series number of the instrument is 1812 or lower, the U7 ROM, 1818-0331 on the A14 Microprocessor board will have to be replaced with U7 ROM, 1818-0706 as described in step d. If instrument has the 1818-0706 ROM, proceed to step e.

CAUTION

ROM U7 is a large-scale MOS IC. Its inputs are susceptible to damage by high voltage and by static charges. Particular care should be exercised when servicing this IC or handling it under conditions where static charges can build up.

d. Remove top plate from 5342A. Remove A14 Microprocessor and replace ROM U7 part number 1818-0331 with part number 1818-0706. Install A14.

e. At bottom of 5342A connect coax cable to the connector at the bottom rear of A2 board labeled D/A OUTP. Solder the other end of this cable to the DAC OUT connector on the rear panel.

f. Connect the white/gray wire to the pin (push-on) labeled LDA at bottom rear of A2 Display Driver board. Solder other end of wire to LDA terminal on A22 Motherboard as shown in figure below.

g. Connect red wire (+15V) and violet wire (-15V) to the proper terminals (push-on pins) on A2 Display Driver board (see *Figure 8-25*, component locator for location). Connect other end of these wires to terminals on A22 Motherboard as shown in figure below.

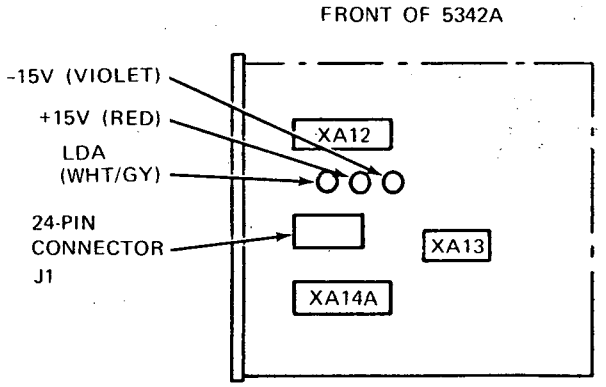

A22 Motherboard, Partial Bottom View

h. Reassemble instrument and perform operational verification procedures in paragraph 4-27 of this manual.

2-34. Installation of HP-IB Option 011

2-35. Option 011 consist of printed-circuit assembly A15 and interconnection board A29. The interconnection board mounts inside the 5342A rear panel and is connected to A22 Motherboard via a cable strap. Procedures for installation of Option 011 are as follows (see photo of installed option, *Figure 8-22*):

a. Remove top and bottom covers and top panel from the 5342A.

b. Insert A15 assembly into A15 slot. See *Figure 8-21* for location.

c. If 5342A is equipped with Option 001 Oscillator, remove oscillator assembly by removing two attaching screws from A22 Motherboard.

NOTE

In the following step, make sure that the address switch (A29S1) is located as shown in *Figure 8-20.*

d. Insert the A29 Interconnection board (05342-60019) into the rear panel slots provided (from inside). Screw the two mounting studs (0380-0644) and washers (2100-3171) into the HP-IB connector to attach the board to the rear panel.

e. Connect the plug of the cable strap from A29 to J2 on A22 Motherboard with arrow on installed plug pointing toward front panel.

f. Perform the Option 011 HP-IB Verification in paragraph 4-19 of this manual.

g. Refer to paragraph 2-36 for HP-IB interconnection data and to paragraph 3-69 for programming information.

2-36. HP-IB Interconnections

2-37. HEWLETT-PACKARD INTERFACE BUS. Interconnection data concerning the rear panel HP-IB connector is provided in *Figure 2-3.* This connector is compatible with the HP 10631A/B/C/D HP-IB cables. The HP-IB system allows interconnection of up to 15 (including the controller) HP-IB compatible instruments. The HP-IB cables have identical "piggy back" connectors on both ends so that several cables can be connected to a single source without special adapters or switch boxes. System components and devices may be connected in virtually any configuration desired. There must, of course, be a path from the calculator (or other controller) to every device operating on the bus. As a practical matter, avoid stacking more than three or four cables on any one connector. If the stack gets too large, the force on the stack produces great leverage which can damage the connector mounting. Be sure each connector is firmly (finger tight) screwed in place to keep it from working loose during use.

2-38. CABLE LENGTH RESTRICTIONS. To achieve design performance with the HP-IB, proper voltage levels and timing relationship must be maintained. If the system cable is too long, the lines cannot be driven properly and the system will fail to perform properly. Therefore, when interconnecting an HP-IB system, it is important to observe the following rules:

a. The total cable length for the system must be less than or equal to 20 metres (65 feet).

b. The total cable length for the system must be equal to or less than 2 metres (6.6 feet) times the total number of devices connected to the bus.

c. The total number of instruments connected to the bus must not exceed 15.

2-39. 5342A Listen Address

2-40. The 5342A contains a rear panel HP-IB Instrument address selection switch. There are five switches designated (A_5, A_4, A_3, A_2, A_1) which are used to select the address. Instructions for setting and changing the listen address are provided in Section III of this manual along with programming codes.

2-41. HP-IB Descriptions

2-42. A description of the HP-IB is provided in Section III of this manual. A study of this information is necessary if the user is not familiar with the HP-IB concept. Additional information concerning the design criteria and operation of the bus is available in IEEE Standard 488-1975, titled *"IEEE Standard Digital Interface for Programmable Instrumentation".*

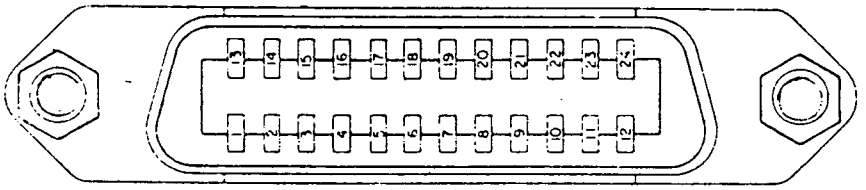

PIN	LINE	
1	DIO1	
2	DIO2	
3	DIO3	
4	DIO4	
13	DIO5	
14	DIO6	
15	DIO7	
16	DIO8	
5	EOI	
17	REN	
6	DAV	
7	NRFD	
8	NDAC	
9	IFC	
10	SRQ	
11	ATN	
12	SHIELD-CHASSIS GROUND	
18	P/O TWISTED PAIR WITH PIN 6	THESE PINS ARE INTERNALLY GROUNDED
19	P/O TWISTED PAIR WITH PIN 7	
20	P/O TWISTED PAIR WITH PIN 8	
21	P/O TWISTED PAIR WITH PIN 9	
22	P/O TWISTED PAIR WITH PIN 10	
23	P/O TWISTED PAIR WITH PIN 11	
24	ISOLATED DIGITAL GROUND	

CAUTION

The 5342A contains metric threaded HP-IB cable mounting studs as opposed to English threads. Metric threaded HP 10631A, B, C, or D HP-IB cable lockscrews must be used to secure the cable to the instrument. Identification of the two types of mounting studs and lockscrews is made by their color. English threaded fasteners are colored silver and metric threaded fasteners are colored black. DO NOT mate silver and black fasteners to each other or the threads of either or both will be destroyed. Metric threaded HP-IB cable hardware illustrations and part numbers follow.

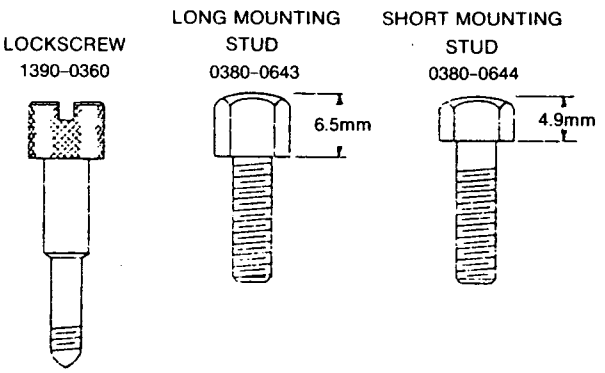

Logic Levels

The Hewlett-Packard Interface Bus logic levels are TTL compatible, i.e., the true (1) state is 0.0V dc to 0.4V dc and the false (0) state is +2.5V dc to +5.0V dc.

Programming and Output Data Format

Refer to Section III, Operation

Mating Connector

HP 1251-0293; Amphenol 57-30240.

Mating Cables Available

HP 10631A, 0.9 metres (3 ft.), HP 10631B, 1.8 metres (6 ft.)
HP 10631C, 3.7 metres (12 ft.)
HP 10631D, 0.5 metres (1.5 ft.)

Cabling Restrictions

1. A Hewlett-Packard Interface Bus System may contain no more than 1.8 metres (6 ft.) of connecting cable per instrument.
2. The maximum accumulative length of connecting cable for any Hewlett-Packard Interface Bus System is 20.0 metres (65.6 ft.).

Figure 2-3. Hewlett-Packard Interface Bus Connection

SECTION III
OPERATION

3-1. INTRODUCTION

3-2. This section contains operating information including operating characteristics, descriptions of controls and indicators, and operating procedures.

3-3. OPERATING CHARACTERISTICS

3-4. The following paragraphs describe the operating ranges and modes, resolution, sample rate, AM and FM characteristics, and auto-amplitude discrimination. Front panel controls and indicators are described in *Figure 3-1*, rear panel controls and connectors are described in *Figure 3-2*. Operating procedures are explained in *Figure 3-3*. Amplitude measurements (Option 002) are described in *Figure 3-4*. DAC operation (Option 004) is described in *Figure 3-5*.

3-5. Operating Ranges

3-6. There are two basic operating ranges: 10 Hz to 500 MHz and 500 MHz to 18 GHz. Frequencies in the lower range are measured directly while measurements in the 500 MHz to 18 GHz range are made indirectly by a harmonic heterodyne down-conversion technique. Provision is made to select either range by a front-panel slide switch. A separate input connector is provided for each range. When the range switch is in the 10 Hz—500 MHz position, the signal at the BNC connector is routed to the direct count circuits of the 5342A. In this range, input impedance is selectable via the 50Ω—1 MΩ switch. When the range switch is in the 500 MHz—18 GHz range, the input signal is applied via the front-panel type N connector to the down-conversion circuits of the 5342A.

3-7. Resolution Keys

3-8. The best case resolution is the value represented by the least significant digit (LSD) in the display. In the 5342A, a maximum resolution of 1 Hz can be selected (by the pushbutton keys on the front panel labeled in blue, preceded by the blue key being pressed). The display is divided into four sections for ease of determining GHz, MHz, kHz, and Hz resolution. Half-sized ▯'s are used as space fillers within a section to improve interpretation of the display. For example, a signal measured to 100 kHz resolution will be displayed thus:

The two filler ▯'s in the kHz section indicate immediately that the 8 represents hundreds of kilohertz. The Hz section is blanked.

3-9. The pushbutton keys on the front panel under the RESOLUTION label are used for other purposes when the blue key is not in effect (has not been pressed). When the blue key has not been pressed, the keys are defined by the black number on the keys and are used to enter frequency offsets, manual center frequencies, and amplitude offsets as described in *Figure 3-1*.

3-10. CHECK, DAC, and ENTER keys

3-11. The CHECK, DAC, and ENTER keys are used as described in *Figure 3-1.*

3-12. FREQ Keys

3-13. Two of the pushbutton keys on the front panel under the FREQ label are used to select the automatic or manual mode of operation. The other keys in this section of the keyboard control the use of the RESOLUTON keys. Use of these keys is described in detail in *Figure 3-1.*

3-14. Automatic Mode

3-15. The automatic mode of operation is selected by pressing the AUTO key. Input signals in the 500 MHz—18 GHz range are acquired, measured, and displayed automatically. When power is initially turned on, the 5342A goes into this mode automatically.

3-16. Manual Mode

3-17. The manual mode of operation is selected by pressing the MAN (MHz) key. To operate in this mode, input signals in the 500 MHz—18 GHz range must be known to within 50 MHz and this frequency (called the manual center frequency) must be entered into the display prior to the measurement. Use of the manual mode is described in detail in *Figure 3-3.*

3-18. Offset Frequencies

3-19. It is sometimes desirable to add or subtract a constant to/from a frequency measurement. For example, by measuring a radio IF and knowing the LO, the counter can display the RF input when the LO frequency is entered as a positive offset. It may be easier to tune an oscillator to a specific frequency if the desired frequency is entered as a negative offset and the oscillator tuned until the counter reads zero. Frequency offsets are described in *Figure 3-3.*

3-20. Amplitude and Offset Measurements

3-21. When Amplitude Option 002 is installed, the amplitude is displayed in addition to the frequency of the input signal. The frequency is displayed to 1 MHz resolution in the five leftmost digits and the amplitude is displayed to 0.1 dB resolution in the four rightmost digits of the display. An arbitrary value can be selected as an amplitude offset and can be added to or subtracted from the measured value as described in *Figure 3-4.*

3-22. Digital-to-Analog Converter (DAC) Operation

3-23. When DAC Option 004 is installed, any three consecutive digits of the display can be selected and converted to a corresponding analog voltage output. The voltage is available at the BNC connector on the rear panel (labeled DAC OUT) and is between Ø and 9.99 volts dc. For example, if the selected digits are ØØØ the output is Ø volts and if the selected digits are 999 the output is 9.99 volts dc. Operating procedures are listed in *Figure 3-5.*

3-24. SET, RESET, RECALL, and CHS Keys

3-25. The SET, RESET, RECALL, and CHS keys allow offsets and center frequencies to be entered, reset the measurement process, recall previous values, and change the sign of offsets as described in *Figure 3-3.*

3-26. SAMPLE RATE, GATE, and REMOTE

3-27. The SAMPLE RATE control adjusts the deadtime between the end of one measurement and the start of the next measurement. The duration of the measurement is determined by the

resolution selected. The SAMPLE RATE is variable between <20 ns and HOLD. In HOLD position the display will hold the measurement displayed indefinitely.

3-28. The GATE indicator is lit during the measurement interval (gate time) when the counter's gate is open and accumulating counts.

3-29. The REMOTE indicator is lit when the 5342A is in remote operation (Option 011 installed).

3-30. AM Tolerance

3-31. The 5342A will measure carrier frequencies containing amplitude modulation to any modulation index provided the minimum voltage of the signal is not less than the sensitivity specification of the 5342A.

3-32. FM Tolerance

3-33. The 5342A will measure carrier frequencies which are modulated in frequency such as a microwave radio carrier. The FM tolerance is the worst case FM deviation which can be present without affecting the counters ability to acquire the signal. If the deviations about the carrier are symmetrical, then the counter averages out the deviations to measure the actual carrier frequency. The FM tolerance is determined by the position of the CW-FM switch on the rear panel. The CW position provides FM tolerance of 20 MHz peak-to-peak. The FM position provides a tolerance of 50 MHz peak-to-peak but results in slower acquisition time (2.4 seconds compared to 530 milliseconds for CW position).

NOTE

Most measurements should be made with the rear panel FM/CW switch in CW position. The FM position should be used only when the input signal has significant amounts of FM (>20 MHz p-p). Incorrect measurements may result if the FM position is used with a stable input (non-FM) signal which has been locked to the counter's time base.

3-34. Automatic Amplitude Discrimination

3-35. The automatic amplitude discrimination feature allows the 5342A to acquire and display the highest level signal within its sensitivity range. The highest level signal must be 20 dB greater in amplitude than any other signal present. Typical operation is approximately 10 dB. This feature is useful for discriminating against spurious signals and harmonics.

3-36. MAXIMUM INPUT SIGNAL POWER

CAUTION

Do not exceed +25 dBm (peak) of input power at the type N connector (500 MHz—18 GHz). Damage to the internal sampler may occur. Refer to paragraph 3-37 for detailed explanation.

3-37. The 5342A will function within specifications for 500 MHz—18 GHz signal inputs up to +5 dBm (standard unit). For measuring higher level inputs, refer to the options described in paragraphs 3-61 and 3-63. Under no circumstances should the input level to the 5342A exceed +25 dBm. If the input power exceeds this level, damage to the internal sampler may occur and the sampler is expensive to replace. Measurements from +5 to +25 dBm are not recommended as false readings may occur. When signal levels exceed +5 dBm external attenuators should be used to attenuate the signal. Options 002 and 003 can extend the range to +20 dBm.

3-38. The 10 Hz—500 MHz direct count input BNC connector is fuse-protected for a maximum input level of 3.5V rms (+24 dBm).

3-39. INPUT CABLE CONSIDERATIONS

3-40. Consideration should be given to input cable losses at higher frequencies. For example, a 6-foot section of RG-214/U coaxial cable has about 15 dB loss at 18 GHz. Such losses must be taken into consideration along with the sensitivity specifications given in *Table 1-1.*

3-41. CONTROLS, INDICATORS, AND CONNECTORS

3-42. *Figure 3-1* describes the front panel controls, indicators, and connectors. *Figure 3-2* describes the rear panel connectors and controls.

WARNING

BEFORE THE INSTRUMENT IS SWITCHED ON, ALL PROTECTIVE EARTH TERMINALS, EXTENSION CORDS, AUTOTRANSFORMERS AND DEVICES CONNECTED TO IT SHOULD BE CONNECTED TO A PROTECTIVE EARTH GROUNDED SOCKET. ANY INTERRUPTION OF THE PROTECTIVE EARTH GROUNDING WILL CAUSE A POTENTIAL SHOCK HAZARD THAT COULD RESULT IN PERSONAL INJURY.

ONLY FUSES WITH THE REQUIRED RATED CURRENT AND SPECIFIED TYPE SHOULD BE USED. DO NOT USE REPAIRED FUSES OR SHORT CIRCUITED FUSEHOLDERS. TO DO SO COULD CAUSE A SHOCK OR FIRE HAZARD.

CAUTION

Before the instrument is switched on, it must be set to the voltage of the power source, or damage to the instrument may result. (Refer to paragraph 2-6.)

3-43. OPERATING PROCEDURES

3-44. *Figure 3-3* illustrates operating procedures for the standard 5342A. Self-check procedures are also given in *Figure 3-3.* An operators keyboard check is given in paragraph 3-45. Operating procedures for Amplitude Option 002 are listed in *Figure 3-4,* and for DAC Option 004 in *Figure 3-5.*

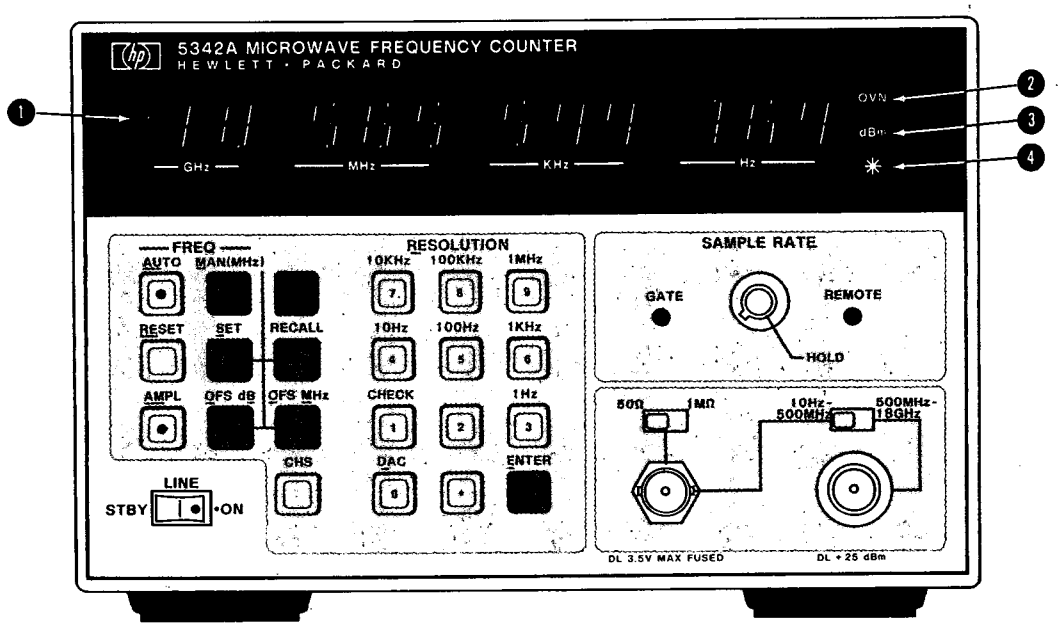

DISPLAY

Digits:

The display contains 11 digit positions, two digits for frequencies in GHz and three digits each for MHz, kHz, and Hz. (The Hz digits position is used to display dBm when Amplitude Option 002 is installed.)

Annunciators:

— Sign (1) When lighted, indicates a negative frequency offset has been entered into display (MHz).

OVN indicator (2) Oven monitor indicates when crystal oscillator oven is on (warming). When warmed-up, light goes out (Option 001 only).

dBm indicator (3) When lighted, indicates amplitude of input signal is being measured (Option 002 installed). Selected by pressing AMPL key and displayed in Hz portion of display. The fourth digit from the right displays a — sign for signals below 0 dBm.

* indicator (4) When lighted, indicates the rear panel CW-FM switch is in FM position. This selects the wide-band mode which provides wider FM (50 MHz p-p) tolerance.

FREQ Keys

The FREQ keys select the mode of operation and control the display.

NOTE

Some keys are equipped with center indicator lights that serve as "prompters" to the user. A blinking indicator light states a "ready" condition for the key function that was selected and the instrument is waiting for a mode or number to be entered. A steady indicator light states that the key function that was selected is in operation.

AUTO key. Selects the automatic mode of operation to acquire and display input signal frequencies in the 500 MHz—18 GHz range. The instrument goes into this mode when power is turned on.

MAN (MHz) key. Selects manual mode for input signal frequencies in the 500 MHz—18 GHz range. Input signal frequency must be known (within 50 MHz) and entered into display via the black-numbered keys.

Figure 3-1. Front Panel Controls and Indicators

Blue key. Pressing this key activates the blue-labeled functions of the RESOLUTION keys.

RESET key. Clears the display and restarts a measurement. Clears any blinking lights in key center indicators.

SET key. Must be pressed prior to selecting OFS dB, OFS MHz or MAN (MHz). The SET condition is indicated by lighted segments = = in the GHz digits of the display. This indicates that a center frequency, offset frequency, or amplitude offset may be entered into the display.

RECALL key. Recalls stored memory information into display. The MAN (MHz), OFS dB, or OFS MHz keys, if **held in** after RECALL is pressed, will result in a display of previously entered or computed information.

NOTE

Information stored in memory (by digit keys) after MAN (MHz) key is pressed is available for display until AUTO mode is selected. Then the center frequency determined by the automatic measurement overrides the manual information.

AMPL key. Selects amplitude mode (when Option 002 is installed). The amplitude of the input signal is displayed in the four rightmost digits of the display to a resolution of 0.1 dBm. The frequency of the input signal is displayed in the five leftmost digits of the display.

OFS dB key. After pressing the SET key, the OFS dB key is pressed prior to entering an offset value in dB via the digit keys. (Digit keys are labeled in black numbers under RESOLUTION.) Indicates selection of amplitude offset mode when lighted and adds amplitude offset to measured amplitude (Option 002).

NOTE

An offset value is an arbitrary value selected for entry into the display to be added or subtracted from a measured value.

OFS MHz key. After pressing the SET key, the OFS MHz key is pressed prior to entering an offset value via the digit keys. (Digit keys are labeled in black numbers under RESOLUTION.) Indicates selection of frequency offset mode when lighted and adds frequency offset to measured frequency.

RESOLUTION keys:

The resolution keys select the display resolution (according to the blue labeling above each key) after the blue key is pressed. The keys are defined by the black number labeled on the key when entering offsets and manual center frequencies.

CHECK key. After pressing the blue key, the CHECK key is pressed to perform a self-check of the instrument. The display will indicate 75 MHz for proper operation. Press RESET to exit self-check.

NOTE

The instrument must not have an **input signal connected** at the 500 MHz—18 GHz input to perform the self-check.

ENTER key. Used to enter digits for manual center frequencies or offsets into memory via black-numbered keys. After the digits have been selected, ENTER key is pressed to signal the end of the digit sequence.

LINE switch. In ON position, applies power to all circuits except the crystal oven (Option 001 installed). The crystal oven connects through a separate transformer, a thermal circuit breaker and fuse directly to the ac line. This allows the oven to maintain its operating temperature and accuracy when the LINE switch is in STBY position, thereby eliminating warmup delays.

SAMPLE RATE control. Adjusts the interval between measurements from 20 ms to HOLD. When rotated to HOLD will hold display indefinitely.

GATE indicator. Indicates when counters main gate is open and a measurement is in progress.

REMOTE indicator. Illuminates when counter is in remote operation.

50Ω—1 MΩ switch. Selects input impedance for adjacent 10 Hz—500 MHz input connector.

10 Hz—500 MHz, 500 MHz—18 GHz switch. Selects either low or high frequency range input connector.

BNC Input Connector. Accepts 10 Hz—500 MHz input for direct count measurements. Measurements made at this input require that the range switch is set to the 10 Hz—500 MHz position. Sensitivity is listed in *Table 1-1.*

Type N Input Connector. Input for measurements in the 500 MHz—18 GHz range. Measurements made at this input require that the range switch is set to the 500 MHz—18 GHz position. Sensitivity is listed in *Table 1-1.*

Figure 3-1. Front Panel Controls and Indicators (Continued)

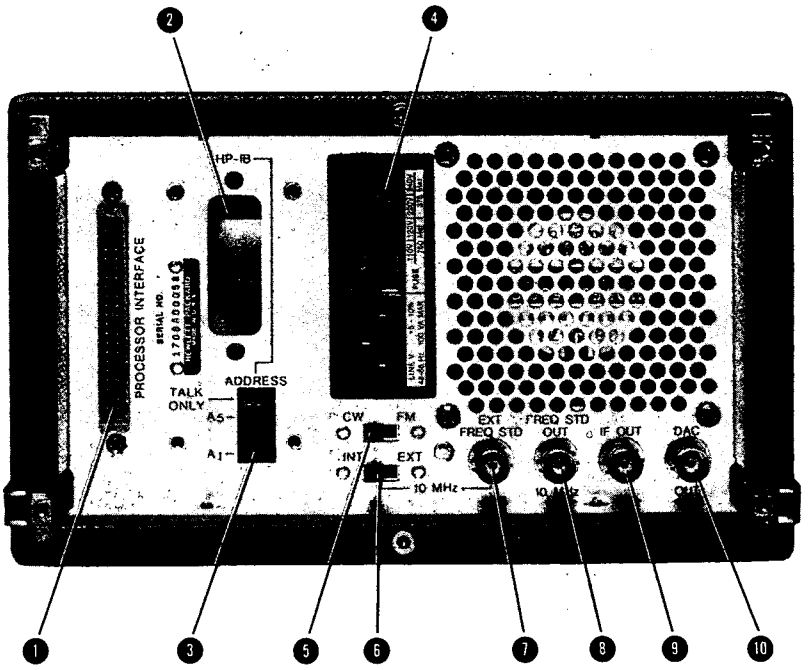

1. PROCESSOR INTERFACE connector A22W4J1. Not used. This connector is part of cable W4 which is connected to A22 motherboard as an interface to the A14 Microprocessor address and data lines. This interface is provided for future use with companion instruments.
2. Position of digital input/output connector when instrument is equipped with Hewlett-Packard Interface Bus (HP-IB) Option 011. Refer to paragraph 3-69 for details.
3. Position of ADDRESS switch when instrument is equipped with Hewlett–Packard Interface Bus (HP-IB) Option 011. Refer to paragraph 3-72 for details.
4. AC Power Module. Input power module consisting of an IEC approved connector, a fuse (0.75 amp for 100/200-volt operation, 0.375 for 220/240-volt operation) and a pc card line voltage selector. Refer to paragraph 2–6 for details.
5. CW–FM selector switch. Selects a short or long pseudorandom sequence (prs). The CW position provides a short prs (or narrow mode) with FM tolerance of 20 MHz p-p. The FM position provides a long prs (or wide mode) with FM tolerance of 50 MHz p-p.

NOTE

Most measurements should be made with the rear panel FM/CW switch in the CW position. The FM position should be used only when the input signal has significant amounts of FM (>20 MHz p-p).

6. INT/EXT selector switch. Selects the internal 10 MHz crystal oscillator signal or an external 10 MHz source for the time base circuit. The external source must be connected to the adjacent connector (7).

NOTE

If the INT/EXT switch is switched and causes momentary loss of clock, the microprocessor may hang up and cause the display to stop counting. To recover, press LINE switch to STBY then to ON.

7. EXT FREQ STD connector. Accepts 10 MHz external time base signal when INT/EXT switch is in EXT position.
8. FREQ STD OUT connector. Supplies a 10 MHz squarewave output at 1.5 volts peak-to-peak.
9. IF OUT connector. Provides the intermediate frequency (IF) output of the Preamplifier circuit for test or monitor of the IF.
10. DAC connector. Provides the output voltage of the digital to analog converter when the Option 004 is installed.

Figure 3–2. Rear Panel Controls and Connectors

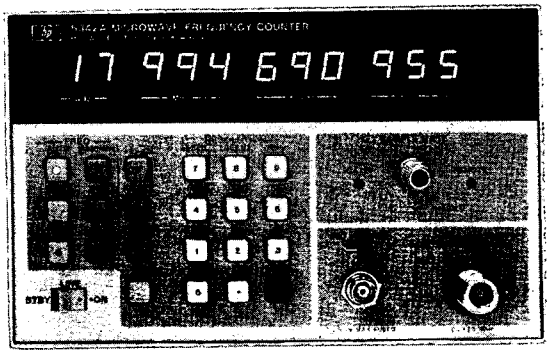

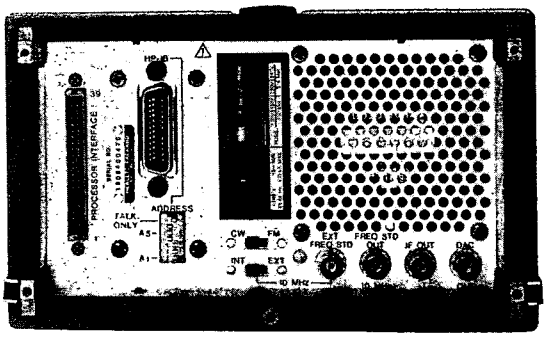

PRELIMINARY PROCEDURES

1. On rear panel:
   a. Set INT/EXT to INT position.
   b. Set CW/FM switch to CW. Refer to paragraph 3-33 for detailed description.
   c. On ac power module, check for proper fuse (0.75 amp for 100/120-volt operation, 0.375 amp for 220/240-volt operation) and check position of pc line voltage selector (refer to paragraph 2-6 for detailed description).
   d. For remote operation, refer to paragraph 3-69 for explanation of HP-IB programming and address switch settings on rear panel (for 5342A's equipped with Option 011).
2. On front panel, set LINE switch to ON position.

CAUTION

Do not exceed +25 dBm peak of input power at the type N connector (500 MHz—18 GHz). Damage to the internal sampler may occur.

NOTE

When the input signal level to the type N connector exceeds approximately +5 dBm, each digit in the display becomes a minus sign (–) to indicate overload. For Options 002, 003, this threshold is approximately +20 dBm.

CAUTION

The 10 Hz—500 MHz direct count input BNC connector is fuse-protected for a maximum input level of 3.5V rms (+24 dBm).

NOTE

The fuse for the 10 Hz—500 MHz input is located on the A3 Direct Count Amplifier assembly.

Figure 3-3. Operating Procedures

3. Connect input signal to appropriate input connector according to frequency requirements (BNC for 10—500 MHz, type N for 500 MHz—18 GHz) and set frequency range switch accordingly.
4. For input signals connected to BNC connector (10—500 MHz): set the 50Ω—1 MΩ switch as required. This switch has no effect on input signals connected to the type N connector (500 MHz—18 GHz).
5. Press blue key, then press blue-labeled RESOLUTION key for desired resolution.

NOTE

Half-sized □'s are used as fillers in the display to facilitate display interpretation.

6. Adjust SAMPLE RATE control for desired interval between measurements.

KEY INDICATORS

Indicator LED's in the center of some keys are used as "prompters" by the operator, as follows:

Blinking Indicator

A blinking LED in a key is a "ready" condition for that key function. It indicates it is waiting for an entry via the keyboard. To clear the condition, press RESET.

Steady Indicator

A steady "on" LED in a key is an indication that the key function is in effect. To clear the condition, press the key. (The AUTO Key is cleared by pressing MAN (MHz) and vice versa.)

SELF-CHECK PROCEDURE

Perform the self-check as follows (no input signal connected and SAMPLE RATE full ccw):

Counter Display:

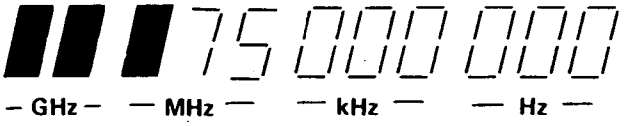

(To exit from CHECK mode, press RESET)

TO SET MANUAL CENTER FREQUENCY

Example — To measure a 4.125 (±0.050) GHz signal in manual mode, connect signal to type N connector and:

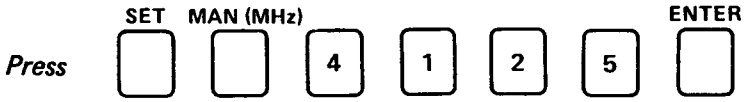

NOTE

The manual center frequency is entered (and displayed) with 1 MHz resolution and must be within 50 MHz of the input signal frequency (connected to 500 MHz—18 GHz connector).

Figure 3-3. Operating Procedures (Continued)

TO ENTER OFFSET FREQUENCY

Example — To add 12.5 MHz to the measured frequency:

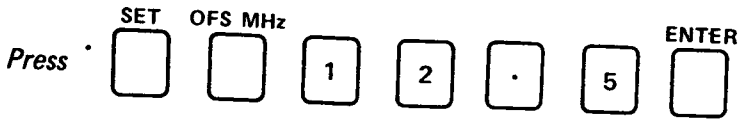

Example — To subtract 12.5 MHz from the measured frequency:

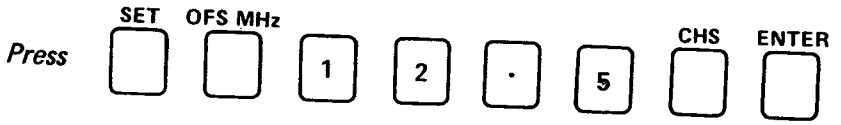

TO RECALL OFFSETS OR CENTER FREQUENCY

Example — To recall a center frequency:

(Displays center frequency to 1 MHz resolution)

Example — To recall an offset frequency:

(Displays offset)

TO REMOVE OFFSETS

Example — To remove offset from display:

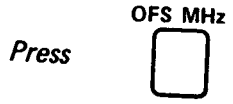

LED in key goes out, function is off and display shows actual measured frequency. (Offset is still stored in memory and can be added to the measurement by pressing OFS MHz again.)

Figure 3-3. Operating Procedures (Continued)

AUTOMATIC OFFSETS

Example — To "hold" a measurement and use it as a negative offset in subsequent measurements:

Rotate SAMPLE RATE cw to HOLD

Press SET OFS MHz Blue key

Rotate SAMPLE RATE ccw to normal

NOTE

The measured frequency will now be negatively offset by the frequency captured when in HOLD.

RESET

Pressing RESET key clears the display and initiates a new measurement without clearing stored values of offset or center frequencies. Clears any blinking (ready state) key indicators, but does not clear steady state indicators. 5342A maintains current operating modes.

Figure 3-3. Operating Procedures (Continued)

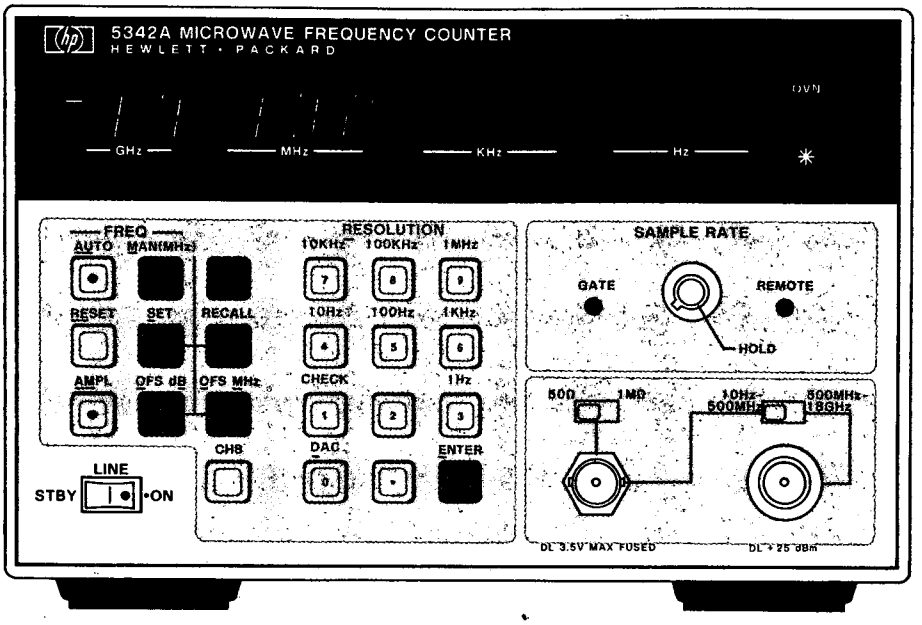

TO MEASURE AMPLITUDE

Example — To simultaneously display frequency to 1 MHz resolution (5 leftmost digits) and amplitude to 0.1 dB resolution (4 rightmost digits):

Press AMPL

TO SET AMPLITUDE OFFSET

Example — To add 4.3 dB to the measured amplitude:

Press SET OFS dB 4 . 3 ENTER

Example — To subtract 4.3 dB from the measured amplitude:

Press SET OFS dB 4 . 3 CHS ENTER

Figure 3-4. Amplitude Measurements (Option 002)

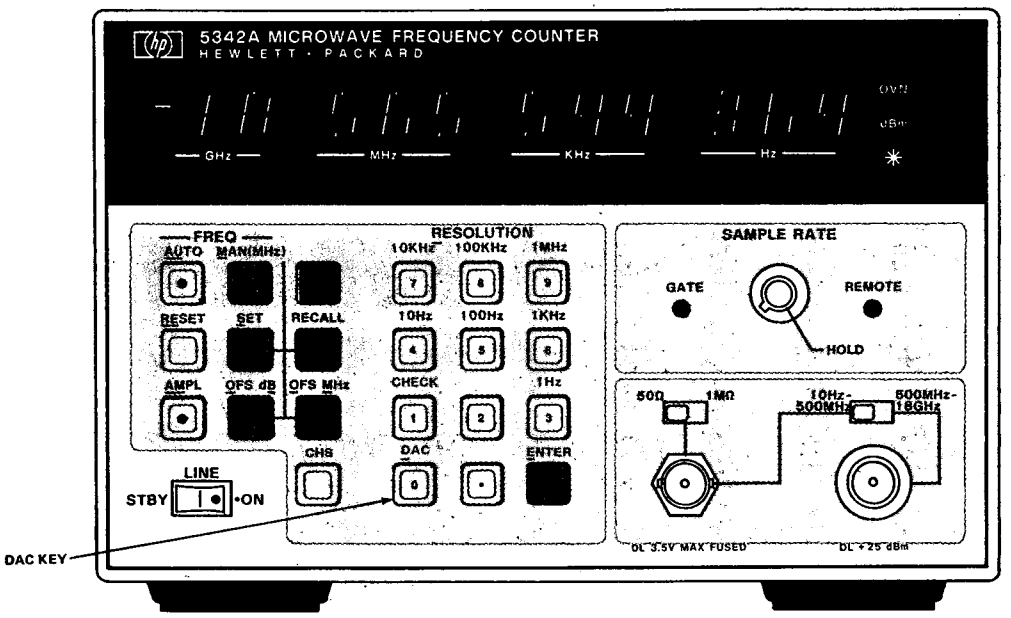

The DAC key is effective only when DAC Option 004 is installed. Selects any three consecutive displayed digits to convert to voltage. The position of the most significant digit of selected digits is determined by the black numbered key. For example.

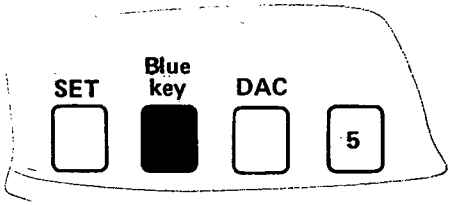

To select digits as follows:

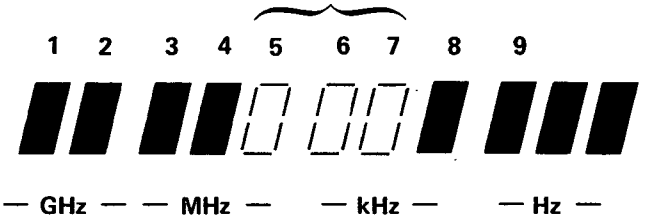

A dc voltage of Ø to 10 volts, corresponding to the selected digits, will be present at the DAC OUT connector on the rear panel. Selected digits ØØØ produces ØV output, 999 produces 9.99V output.

NOTE

Use the manual mode, minimum required resolution (1 MHz is lowest) and as fast a sample rate as possible to obtain the smoothest output.

Figure 3-5. DAC Operation (Option 004)

3-45. OPERATOR KEYBOARD CHECK

3-46. Check for proper operation of the keyboard and display by pressing the keys listed and observing display. To exit from keyboard check mode, press RESET.

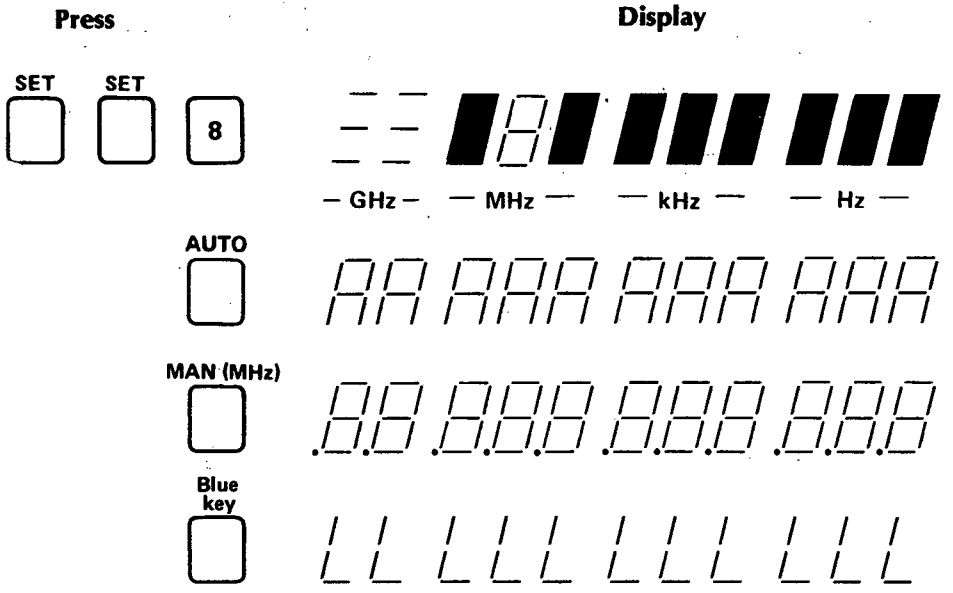

NOTE

Do not press RESET key or procedure will need to be started over.

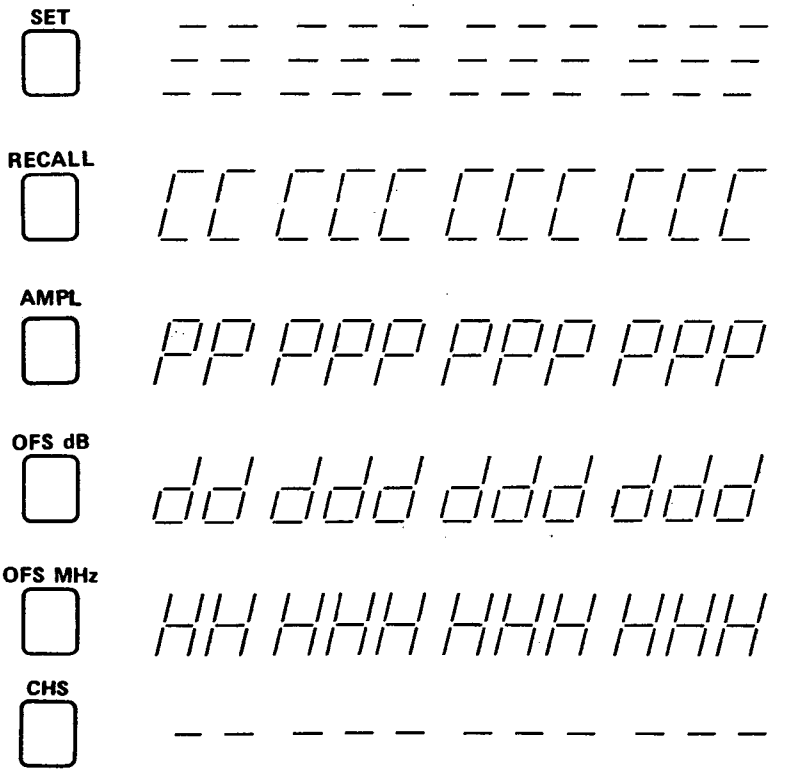

Press	Display
7	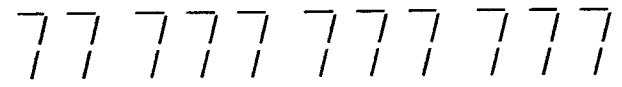
8	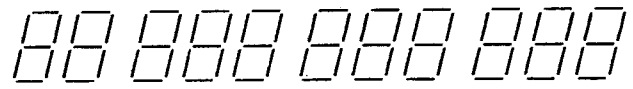
9	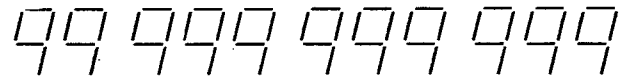
4	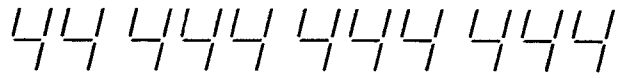
5	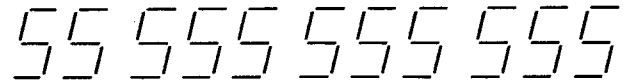
6	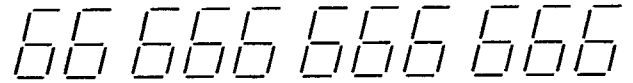
1	
2	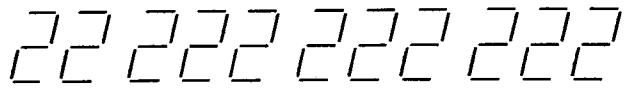
3	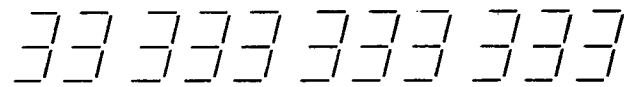
0	
.	
ENTER	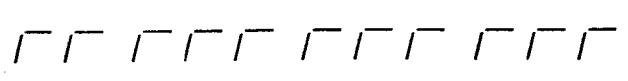

3-47. ERROR CODE DISPLAYS

3-48. Error codes are displayed by the 5342A to indicate circuit malfunctions in the instrument and to indicate operator (procedure) errors.

3-49. Instrument Error Displays

3-50. When power is applied to the 5342A, check-sum routines are automatically performed. If a routine fails, an error code is displayed to indicate the circuit fault area as follows:

Display	Fault Area
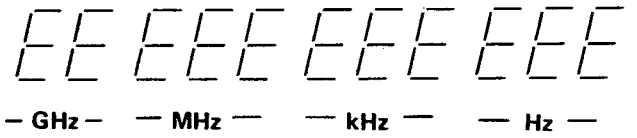	RAM A14U12
	ROM A14U7
	ROM A14U4
	ROM A14U1
	PROM A16U3
	No Conversion complete signal from A16U8(36)

NOTE

If any of the above codes are displayed, refer to the troubleshooting procedures in *Table 8-5*.

3-51. Operator Error Displays

3-52. The display indicates when the applied signal is insufficient or excessive in level or limits, as follows:

Operating Mode	Range Switch	Insufficient Signal Level Display
*Frequency	10 Hz—500 MHz	
*Frequency	500 MHz—18 GHz	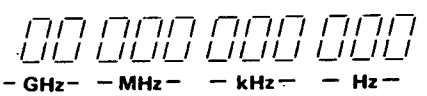
Amplitude (Option 002)	10 Hz—500 MHz	
Amplitude (Option 002)	500 MHz—18 GHz	
		Excessive Signal Level Display
Frequency	500 MHz—18 GHz	– – – – – – – – – –
†Amplitude (Option 002)	10 Hz—500 MHz and 500 MHz—18 GHz	
		Overrange (due to offset)
Frequency	10 Hz—500 MHz and 500 MHz—18 GHz	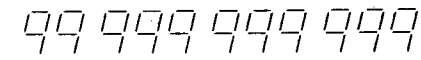
Amplitude (Option 002)	10 Hz—500 MHz and 500 MHz—18 GHz	Frequency measurement. In presence of excessive frequency offset, will be all 9's.
		Out of Frequency Limits (Amplitude)
Amplitude (Option 002)	10 Hz—500 MHz and 500 MHz—18 GHz	(if frequency <10 MHz or frequency >18.4 GHz)

NOTES:

*Shown for 1 Hz resolution. Digit shifts one position to left for each step decrease in resolution.

†For input signal levels greater than 22.9 dBm, it is possible for the IF detector not to indicate an excessive level condition so that frequency will be displayed (five leftmost digits). However, the amplitude option will cause dashes in the amplitude portion of the display because of excessive level.

3-53. Limit Errors and Sequence Errors

3-54. A limit error (for example, setting a manual center frequency less than 500 MHz) will be displayed as:

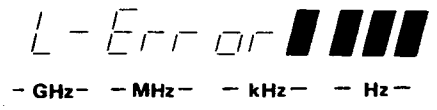

3-55. A sequence error (for example, pressing a digit key before pressing a function key) will be displayed as:

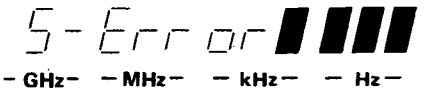

3-56. For detailed descriptions of error codes, refer to *Table 8-5.*

3-57. OPTIONS

3-58. The operating characteristics of the 5342A are affected by the addition of any of the options described in the following paragraphs.

3-59. Time Base Option 001

3-60. Option 001 provides an oven-controlled crystal oscillator time base (Model 10544A) that results in higher accuracy and longer periods between calibration (refer to *Table 1-1*). The oven temperature is maintained when the 5342A LINE switch is in either the ON or the STBY position (provided the instrument is connected to the power mains). When the OVN indicator in the display is lit, the oven is on (warming). When the oven is at the proper temperature, the OVN indicator goes out.

3-61. Amplitude Option 002

3-62. The amplitude option provides the capability of measuring the amplitude of the input signal and simultaneously displaying the frequency (5 leftmost digits) and the amplitude level in dBm (4 rightmost digits). The maximum operating level of +5 dBm for the standard 5342A is extended to +20 dBm for Option 002. The frequency is displayed to a resolution of 1 MHz and the level is displayed to a resolution of 0.1 dBm. The sensitivity of the 5342A with Option 002 is approximately 3 to 5 dB less than the standard 5342A, depending upon frequency.

3-63. Extended Dynamic Range Option 003

3-64. The extended dynamic range option extends the maximum operating level of +5 dBm for the standard 5342A to +20 dBm for Option 003 by insertion of an attenuator at the input (ahead of the sampler). The insertion loss of the attenuator results in a sensitivity decrease of approximately 3 to 5 dB, depending upon the frequency of the signal.

3-65. HP-IB Interface Option 011

3-66. The Hewlett-Packard Interface Bus (HP-IB) Option 011 allows the functions of the 5342A to be controlled remotely and allows measurement data to be ouptut to the bus. Programming information for Option 011 is given in paragraphs 3-69 through 3-80.

3-67. Digital-to-Analog Converter (DAC) Option 004

3-68. The DAC option allows selection of any three consecutive digits in the display and conversion of these digits to an analog voltage. The analog voltage is available at a rear panel connector. The digits are converted to a voltage of from Ø to 10 volts, corresponding to the digits selected. Digits ØØØ produce Ø volts, digits 999 produce 9.99 volts, fullscale into 15 kilohms.

3-69. HP-IB PROGRAMMING (OPTION 011)

3-70. The capability of a device connected to the HP-IB is specified by its interface functions. *Table 3-1* lists the interface functions of the 5342A using the terminology of IEEE Standard 488-1975 (Appendix C). Interface functions provide the means for a device to receive, process, and send messages over the HP-IB. Procedures for verification of proper operation of Option 011 HP-IB are contained in paragraphs 4-19 through 4-26.

Table 3-1. HP-IB Interface Capability

Interface Function Subset Identifier	Interface Function Description
SH1	Complete source handshake capability.
AH1	Complete acceptor handshake capability.
T1	Talker (basic talker, serial poll, talk only mode, does not unaddress to talk if addressed to listen).
L2	Listener (basic listener, no listen only mode, doe not unaddress to listen if addressed to talk).
SR1	Service request capability.
RL1	Complete remote/local capability.
PPØ	No parallel poll capability.
DC1	Device clear capability.
DT1	Device Trigger capability.
CØ	No controller capability.
E1	One unit load.

3-71. There are 12 basic messages which can be sent over the interface. *Table 3-2* lists each bus message, a description of the message, how the 5342A uses that message, and examples of 9825A implementation of the messages.

3-72. The 5342A must be assigned a bus address. *Table 3-3* gives the allowable address switch settings.

3-73. *Table 3-4* gives the program code set for the 5342A. Frequency and amplitude mode selection, manual center frequency setting, frequency and amplitude offset mode selection, frequency and amplitude offset setting, resolution selection, range selection, FM/CW mode selection, and automatic offsets are all analogous to the corresponding front panel operations described previously.

3-74. There are four sample rate modes TØ–T3. In TØ, the sample rate is determined by the setting of the front panel SAMPLE RATE control. In T1, the counter is in hold. To trigger a measurement, a trigger message must be sent. In T2, the counter ignores any sample rate run-down and initiates a new measurement as soon as the previous measurement is over. In T3, the counter takes a measurement and holds until the next T3 or trigger message.

Table 3-2. 5342A Bus Message Usage

Message	Description	5342A Use	Sample 9825 Statements (5342A set to Address 02)
Data	Transfers device-dependent information from one device to one or more devices on the bus.	Sends measurement data. See paragraph 3-77 for output format. Accepts program codes. See *Table 3-4* for code set.	red 702, A wrt 702, "AUSR4"
Trigger	Causes a group of selected devices to simultaneously initiate a set of device-dependent actions	Starts a new measurement.	trg 7 or trg 702
Clear	Causes an instrument to be set to a predefined state (a certain range, function, etc.).	Same as front panel RESET. Clears internal count and starts new measurement.	clr 7 or clr 702
Remote	Permits selected devices to be set to remote operation, allowing parameters and device characteristics to be controlled by Bus Messages.	5342A goes to remote if REN is true and addressed to listen. In absence of program data, remote operation is according to the state of the front panel settings just prior to going to remote.	rem 702
Local	Causes selected devices to return to local (front panel) operation.	Goes to local front panel control. In absence of front panel data, local operation is according to the state of the remote data just prior to going to local.	lcl 702
Local Lockout	Disables local (front panel) controls of selected devices.	Disables front panel RESET. 5342A remains in remote.	llo 7
Clear Lockout and local	Returns all devices to local (front panel) control and simultaneously clears the Local Lockout Message.	Local lockout cleared and returns to local front panel control	lcl 7
Require Service	Indicates a device's need for interaction with the controller.	Pulls on SRQ to indicate end of a measurement.	rds(7)→A if bit (7, A) (bit 7=1 if SRQ true)
Status Byte	Presents status information of a particular device; one bit indicates whether or not the device currently requires service, the other 7 bits (optional) are used to indicate the type of service required.	In serial poll mode, 5342A outputs decimal 80 (01010000) to indicate end of measurement.	rds (702)→A (if A=80, then 5342A is ready to output)
Status Bit	A single bit of device-dependent status information which may be logically combined with status bit information from other devices by the controller.	Does not use	—
Pass Control	Passes bus controller responsibilities from the current controller to a device which can assume the Bus supervisory role.	Does not use	—
Abort	Unconditionally terminates Bus communications and returns control to the system controller.	Clears Talk, Listen, Serial Poll Enable registers on 5342A HP-IB interface. Front panel annunciators do not change, however.	cli 7

Table 3-3. Address Selection

Rear panel address switch:

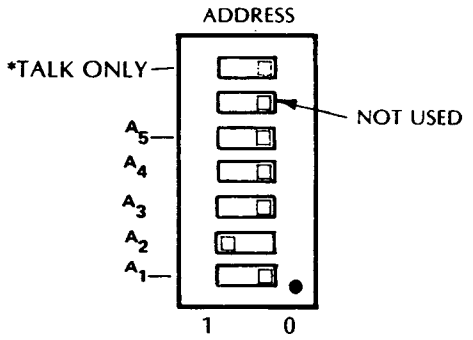

(Shown in addressable mode, and address 02)

*If the 5342A is in TALK ONLY mode and it is desired to return to the addressable mode, set TALK ONLY switch to 0 and press RESET on front panel.

ASCII CODE CHARACTER		ADDRESS SWITCHES					5-BIT DECIMAL CODE
LISTEN	TALK	A_5	A_4	A_3	A_2	A_1	
SP	@	0	0	0	0	0	00
!	A	0	0	0	0	1	01
"	B	0	0	0	1	0	02
#	C	0	0	0	1	1	03
$	D	0	0	1	0	0	04
%	E	0	0	1	0	1	05
&	F	0	0	1	1	0	06
'	G	0	0	1	1	1	07
(	H	0	1	0	0	0	08
)	I	0	1	0	0	1	09
*	J	0	1	0	1	0	10
+	K	0	1	0	1	1	11
,	L	0	1	1	0	0	12
—	M	0	1	1	0	1	13
.	N	0	1	1	1	0	14
/	O	0	1	1	1	1	15
ø	P	1	0	0	0	0	16
1	Q	1	0	0	0	1	17
2	R	1	0	0	1	0	18
3	S	1	0	0	1	1	19
4	T	1	0	1	0	0	20
5	U	1	0	1	0	1	21
6	V	1	0	1	1	0	22
7	W	1	0	1	1	1	23
8	X	1	1	0	0	0	24
9	Y	1	1	0	0	1	25
:	Z	1	1	0	1	0	26
;	[	1	1	0	1	1	27
<	\	1	1	1	0	0	28
=	]	1	1	1	0	1	29
>	~	1	1	1	1	0	30

Table 3-4. Option 011 HP-IB Program Code Set

1. FREQUENCY MODE SELECT

AUTO	AU
MANUAL	M

2. SET MANUAL CENTER FREQUENCY

SMXXXXXE (X's represent nonfixed length data string of up to 5 characters. Decimal points cause entire string to be ignored. + signs and spaces are allowable. Number is in MHz and must be less than 18 GHz or will be ignored.)

Example: SM10000E for 10 GHz center frequency
SM775E for 775 MHz center frequency
SM+5250E for 5.25 GHz center frequency

3. AMPLITUDE MODE SELECT

Amplitude off	AMØ
Amplitude on	AM1

4. FREQUENCY OFFSET MODE SELECT

Frequency Offset off	OMØ
Frequency Offset on	OM1

5. SET FREQUENCY OFFSET

SOM±XXXXX.XXXXXXE (X's represent nonfixed length data string representing offset frequency in MHz. Spaces are ignored.)

Example: SOM10.7E for 10.7 MHz positive offset
SOM-4000.25E for 4.00025 GHz negative offset.

6. AMPLITUDE OFFSET MODE

Amplitude Offset off	OBØ
Amplitude Offset on	OB1

7. SET AMPLITUDE OFFSET

SOB±XX.XE (X's represent nonfixed length data string representing offset amplitude in dB. Spaces are ignored.)

Example: SOB-10.1E for 10.1 dB negative offset
SOB3.5E for 3.5 dB positive offset
SOB10E for 10 dB positive offset.

8. RESOLUTION

1 Hz	SR3
10 Hz	SR4
100 Hz	SR5
1 kHz	SR6
10 kHz	SR7
100 kHz	SR8
1 MHz	SR9

9. RANGE

10 Hz—500 MHz	L
500 MHz—18 GHz	H

10. FM/CW MODE

CW mode	C
FM mode	F

Table 3-4. Option 011 HP-IB Program Code Set (Continued)

11. SAMPLE RATE

Front panel sample rate	TØ
Hold	T1*
Fast sample (no delay)	T2
Sample then hold	T3

*Send trigger command (trg 7 or trg 702) to start measurement. If 5342A is in remote and addressed to listen and other than Hold (T1), the trigger command causes the 5342A to automatically go to Sample then Hold (T3).

12. OUTPUT MODE

Output only when addressed	ST1
Wait until addressed	ST2

13. RESET

RE (display is blanked and new measurement initiated. If in Hold (T1), then measurement is not completed but stays in Hold. Does not return control to local.)

14. AUTOMATIC OFFSETS

Automatic frequency offset	SOMB
Automatic amplitude offset	SOBB

15. CHECK MODE

SR1 (No input can be present at RF connector. Counter must be in SAMPLE RATE full ccw. Be sure to send RESET command (RE) before making other measurements.)

3-75. In the "output only when addressed" mode, the counter pulls SRQ at the end of a measurement and then checks to see if it has been addressed to talk. If not, SRQ is cleared and it starts the next measurement. If it has been addressed to talk, it outputs the measurement, clears SRQ, and starts the next measurement. In the "wait until addressed" output mode, the counter pulls SRQ at the end of a measurement and waits in a loop until it has been addressed to talk. When it is addressed to talk, it outputs the measurement, clear SRQ and starts the next measurement.

NOTE

If the counter is placed in the HOLD (T1) mode, triggered, then addressed to talk, be sure to use the Wait Until Addressed (ST2) output mode. If not, then for short gate times the measurement may be completed before the controller addresses the counter to talk and the counter will discard the measurement result and hang up the bus.

3-76. The 5342A executes each complete program code as it is received just as if the microprocessor were receiving the data from the front panel keyboard. Program code strings should be in the same order as they would be if being entered from the front panel. When a data byte is sent to the 5342A HP-IB Option 011, the HP-IB interface stores the byte and sends an interrupt to the microprocessor which reads in the byte. If the byte does not complete a program code, then the microprocessor waits for the next byte(s) until a complete code is sent (for example, SR5 is a complete code but SR is not). After a complete code is received, the microprocessor executes the code and begins the measurement. If more codes are in the string, another interrupt is generated. For example, if the string "SR5AU" is sent by the controller, the "S" is the first byte received and stored by the 5342A HP-IB interface. The interface generates an interrupt to the microprocessor and the "S" is read by the MPU. Since S is not a complete code, the microprocessor

waits until the complete code is sent and received. After "R" and then "5" are sent, the microprocessor sets the resolution accordingly and then goes to the beginning of the measurement. When the controller sends "A", an interrupt is generated and "A" is read by the microprocessor. It then waits for the complete code to be sent which in this case is "AU". The microprocessor again goes to the start of the measurement cycle.

NOTE

The following output formats pertain to input signals of specified sensitivity (*Table 1-1*). For less sensitive input signals, refer to paragraph 3-82.

3-77. The 5342A outputs measurement data in the following fixed length formats:

a. NO OFFSET, FREQUENCY ONLY

SP F SP SP XXXX.XXXXXX E + Ø6 CR LF

frequency, space, carriage return, line feed

b. NO OFFSET, FREQUENCY, AND AMPLITUDE

SP F SP SP XXXXX.XXXXXX E + Ø6, A SP ±XX.X E + Ø CR LF

amplitude

c. OFFSETS in both FREQUENCY and AMPLITUDE

SP FS ±XXXXX.XXXXXX E + Ø6, AS ±XX.X E + Ø CR LF

offset, offset

d. OVERLOAD (Amplitude off)

SP F SP SP 99999.999999 E + Ø9 CR LF

(caused by excessive input level)

e. DISPLAY OVERFLOW (Amplitude off)

SP F SP SP 99999.999999 E + Ø6 CR LF

(caused by offset which makes display overflow)

f. OVERLOAD (Amplitude on)

SP F SP SP 99999.999999 E + Ø9, A SP SP 99.9 E + Ø CR LF

(caused by excessive input level)

g. DISPLAY OVERFLOW (Amplitude on)

SP F SP SP XXXXX.XXXXXX E + Ø6, A SP SP 99.9 E + Ø CR LF

(caused by offset which makes display overflow)

h. INSUFFICIENT SIGNAL (Amplitude off)

SP F SP SP ØØØØØ.ØØØØØØ E + Ø6, CR LF

i. INSUFFICIENT SIGNAL (Amplitude on)

SP F SP SP ØØØØØ.ØØØØØØ E + Ø6, A SP + 99.9 E + CR LF

3-78. When the 5342A is in remote, the front panel REMOTE annunciator lights. When the 5342A is addressed to talk, the front panel RECALL pushbutton lamp will light.

3-79. 9825A PROGRAM EXAMPLES

3-80. The following 9825A program examples are illustrative of 5342A programming:

```
0: wrt 702,"AUSR
 7T1ST2"
1: trg 702;red
 702,A;dsp A;
 wait 500
2: sto 1
3: end
*3802
```

EXAMPLE 1

This program assumes the range switch was set to 0.5—18 GHz before the program was executed. The program puts the 5342A in AUTO, 10 kHz resolution, HOLD, and "wait until addressed" output mode. Program takes a measurement (trg 702) and reads it into the A register. After waiting 500 ms, the program loops back to the next trigger, then read statement.

```
0: wrt 702,"AUSR
 4T2ST1          "
1: red 702,A;
 cmd 7,"_";dsp
 A;wait 500
2: sto 1
3: end
*6699
```

EXAMPLE 2

This program also assumes the range switch was previously set to the 0.5—18 GHz position. The program puts the counter in AUTO mode, 10 Hz resolution, fast sample, and "only if addressed" output mode. The program takes a measurement, unaddresses the 5342A as a talker (cmd 7, "—") so that the counter will continue making measurements at a fast rate, and waits 500 ms until reading the next measurement.

```
0: wrt 702,"SM10
 000ESR3HFT0ST1"
1: red 702,A;
 prt A
2: sto 1
3: end
*1870


 10030069548.00
 10030069544.00
 10030069539.00
 10030069529.00
 10030069524.00
 10030069514.00
 10030069512.00
```

EXAMPLE 3

This program sets a manual center frequency of 10 GHz (input frequency = 10.03 GHz), 1 Hz resolution, 0.5—18 GHz range, FM mode, front panel sample rate control, and "output only if addressed". Each reading is printed on the 9825A printer.

```
0: wrt 702,"AUSR
 3T2ST1AM1"
1: red 702,A,B;
 prt A;prt B
2: sto 1
3: end
*32729


   4230028373.00
          -5.30
   4230028373.00
          -5.30
   4230028367.00
          -5.30
   4230028370.00
          -5.30
```

EXAMPLE 4

This program selects AUTO mode, 1 Hz resolution, fast sample, "output only if addressed", and amplitude "on". The frequency is read into the A register and the amplitude is read into the B register. Notice that although the frequency is displayed only to 1 MHz resolution on the counter, the full 1 Hz resolution is output to the calculator.

```
0: wrt 702,"AUSR
 3T2ST1AM1SOB-
 10.0E"
1: red 702,A,B;
 prt A;prt B
2: sto 1
3: end
*20921


   4230028349.00
         -15.30
   4230028349.00
         -15.30
   4230028350.00
         -15.30
   4230028342.00
         -15.30
```

EXAMPLE 5

This program measures the same signal as in (4) but enters a –10 dB offset in the amplitude measurement.

EXAMPLE 6

```
0: wrt 702,"AUSR
 3T2ST1AM1SOB-
 10.0ESOM10000EO
 M1"
1: red 702,A,B;
 prt A;prt B
2: sto 1
3: end
*6961



  14230028337.00
           -15.30
  14230028335.00
           -15.30
  14230028338.00
           -15.30
  14230028332.00
           -15.30
```

This is the same program as (5) but with a +10 GHz offset.

3-81. HP-IB PROGRAMMING NOTES

3-82. The HP-IB output is affected by input signal level as follows:

a. For input signal levels greater than or equal to specified sensitivity, the 5342A outputs measurement data as described in paragraph 3-77.

b. For input signal levels less than the actual sensitivity by 0.1 dB or more (or for no input), the counter outputs zeros when addressed to talk.

c. For input signal levels just on the edge of the counter's actual sensitivity (approximately a 0.1 dB band) the detectors which indicate sufficient signal level for counting may become intermittent resulting in very long acquisition times. The counter's display holds the previous reading during the prolonged acquisition but the counter will not output any data when addressed to talk. This will hang up the program at the read statement.

d. With the 9825A, use the "time" statement and "on err" statement to branch around the read statement if it takes longer than a specified number of milliseconds to complete an I/O operation. The following example program can be used when there is more than one read statement in the program. If there is only one read statement, then statement 2 could be deleted and the end of statement 7 could simply cause the program to go to the statement after the read (in this case, "gto 6"):

EXAMPLE

```
0: dev "ctr",702
1: gto "begin"
2: "er ret":jmp
 er1-1
3: "begin":time
 1000:on err
 "er"
4: wrt "ctr",
 "AUSR4HCT1"
5: trg "ctr";
 red "ctr",A
6: wait 500:prt
 A:jmp -1
7: "er":if err=4
 :0→A:time 1000:
 on err "er":
 gto "er ret"
8: end
*29627
```

Since this statement is in line 2, the program jumps to the statement after the read statement.

Error 4 is time out error. Reset time and error jump.

```
6.200093550e 09
6.200093540e 09
6.200093540e 09
6.200093550e 09
        0.000000
        0.000000
        0.000000
        0.000000
6.200093530e 09
6.200093530e 09
6.200093540e 09
6.200093540e 09
```

When the 5342A took more time than 1 second to make the measurement, zeroes are output.

NOTE

For any controller, check SRQ to see if a measurement has been completed. Allow an adequate number of iterations on the SRQ check to permit the counter to complete the measurement and pull SRQ. A flow diagram of such an algorithm is:

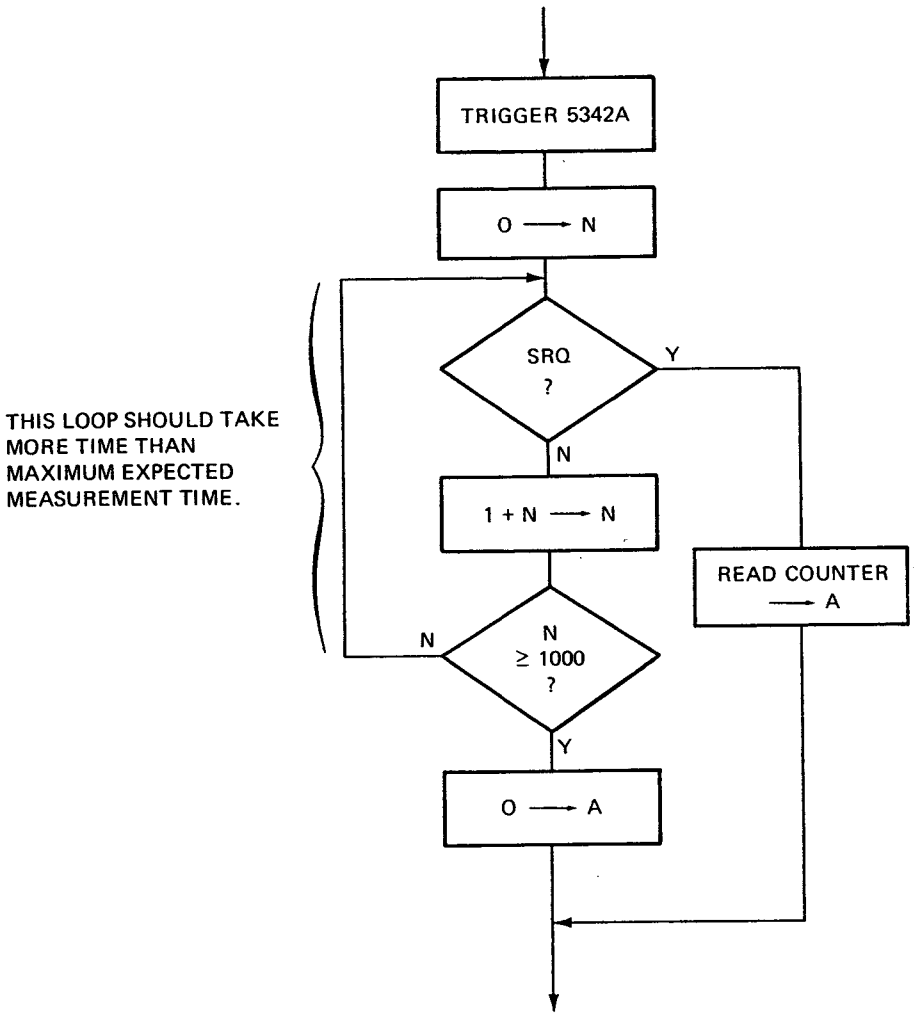

3-83. REMOTE PROGRAMMING OF DIAGNOSTIC MODE 6 (OPTION 002, 011 ONLY)

3-84. In some system applications, it may be desirable to program the 5342A to diagnostic mode 6 so that the counter will constantly present a low SWR and not switch to frequency measurements (higher SWR). The following example shows how this may be done:

EXAMPLE

```
0: dev "ctr",702
1: wrt "ctr",
 "AUAM1SR5T1"
2: wtb "ctr",15,
 2,0,140,1
3: rdb("ctr")→Z;
 ior(Z,1)→Z
4: wtb "ctr",1,
 0,140,1,Z,5
5: trg "ctr";
 wait 5000
6: wtb "ctr",15,
 2,0,140,1
7: rdb("ctr")→Z;
 band(Z,254)→Z
8: wtb "ctr",1,
 0,140,1,Z,5
9: end
*21719
```

Program counter for AMPL mode

This sets the counter to diagnostic mode 6

Counter must be triggered to enter diagnostic mode 6. For 5 seconds, counter does not switch to frequency.

This resets the counter to amplitude and frequency measurements

SECTION IV
PERFORMANCE TESTS

4-1. INTRODUCTION

4-2. The procedures in this section test the electrical performance of the 5342A using the specifications in *Table 1-1* as performance standards. Those specifications which are inherent to the design (obvious during operation) are not covered in these tests. For example, worst case acquisition time is determined by the period of the sweep and the length of the pseudo-random sequence. If the counter acquires the signal, it must have acquired it in a time less than specified.

4-3. OPERATIONAL VERIFICATION

4-4. The abbreviated checks given in paragraphs 4-12 through 4-18 can be performed to give a high degree of confidence that the 5342A is operating properly without performing the complete performance test. The operational verification should be useful for incoming QA, routine maintenance, and after instrument repair. The Option 011 HP-IB Verification Program is described in paragraphs 4-19 through 4-26. The Option 004 DAC test is contained in paragraph 4-27.

4-5. COMPLETE PERFORMANCE TEST

4-6. The complete performance test is given in paragraphs 4-28 through 4-40. All tests can be performed without access to the inside of the instrument.

4-7. EQUIPMENT REQUIRED

4-8. Equipment required for the complete test and operation verification is listed in *Table 1-4*. Any equipment which satisfies the critical specifications given in the table may be substituted for the recommended model numbers.

4-9. TEST RECORD

4-10. Results of the operational verification may be tabulated on the Operational Verification Record, *Table 4-1*. Results of the performance test may be tabulated on the Performance Test Record, *Table 4-5*.

4-11. OPERATIONAL VERIFICATION PROCEDURES

4-12. Self-Check

a. Select 1 Hz resolution, AUTO mode, and 500 MHz—18 GHz range. Set self-check mode and verify counter displays 75.000 000 MHz ±1 count.

b. Set 5342A to 10 Hz—500 MHz range. Connect rear panel FREQ STD OUTPUT to front panel BNC input. Select 50Ω impedance. Verify that the 5342A counts 10.000 000 MHz ±1 count.

4-13. 10 Hz—500 MHz Input Sensitivity Test, 50Ω/1 MΩ (Standard and Option 003 Instruments Only)

Setup:

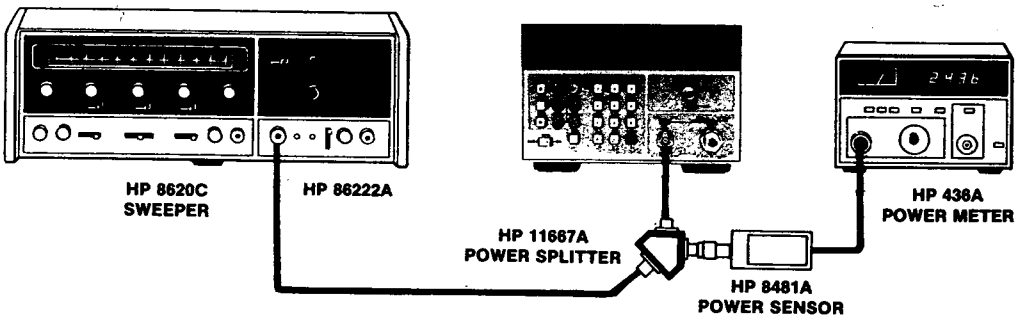

- Set the 5342A to 10 Hz—500 MHz range and 50Ω.
- Set 8620C to 10 MHz and a level of -19.3 dBm (25 mV rms) as measured on the 436A Power Meter. Measure actual sensitivity and verify that the 5342A counts at 10 MHz, 100 MHz, 520 MHz, and record on operational verification record (*Table 4-1*).
- Disconnect 11667A and connect 8481A directly to 86222A output. Set 8620C to 25 MHz at a level of -19.3 dBm (25 mV rms).
- Disconnect 8481A from 86222A output. Switch 5342A to the 1 MΩ position. Connect 86222A output to 5342A 10 Hz—500 MHz input (86222A supplies 25 mV rms into 50Ω or 50 mV rms into 1 MΩ).
- Verify that the 5342A counts 25 MHz at 50 mV rms and record on operational verification record (*Table 4-1*).

4-14. 10 Hz—500 MHz Input (50Ω) Minimum Level and Amplitude Accuracy Test (Option 002)

Specification: ±1.5 dB accuracy for frequencies from 10 MHz to 520 MHz.

Minimum Level: -17 dBm.

Setup:

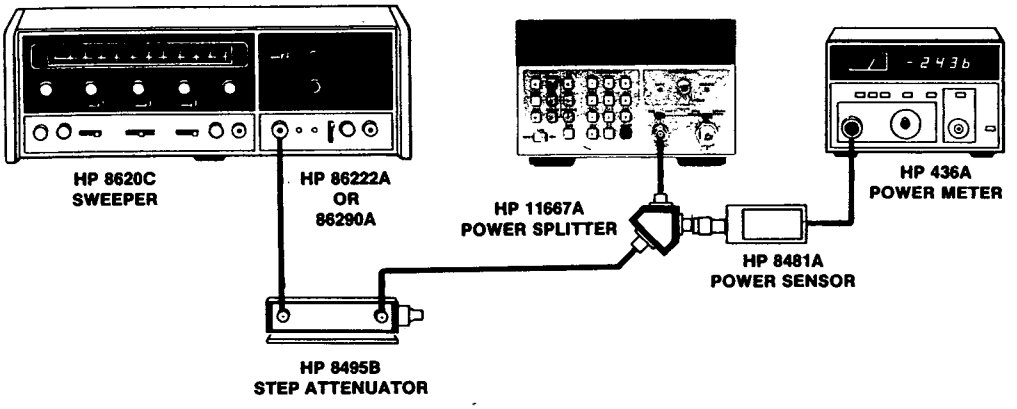

- Connect the 11667A directly (using type N to BNC adapter) to the 5342A BNC low frequency input. Connect 8481A directly to the other 11667A output.
- Set the 5342A to 10 Hz—500 MHz range, 50Ω, and amplitude mode.
- Set the 86222A to 10 MHz and adjust output level and 8495B for a level of -17 dBm as measured on the 436A Power Meter. (8495B set to 10 dB or greater.) Slowly vary the 8620C from 10 Hz to 520 MHz and verify that the 5342A displays correct frequency.
- Take a measurement at 10 MHz, 100 MHz, and 520 MHz, and verify that 5342A reading is within ±1.5 dB of 436A reading. Enter results on operational verification record (*Table 4-1*).

4-15. 10 Hz—500 MHz Input (50Ω) Maximum Input Test (Option 002)

Specification: +20 dBm

Setup:

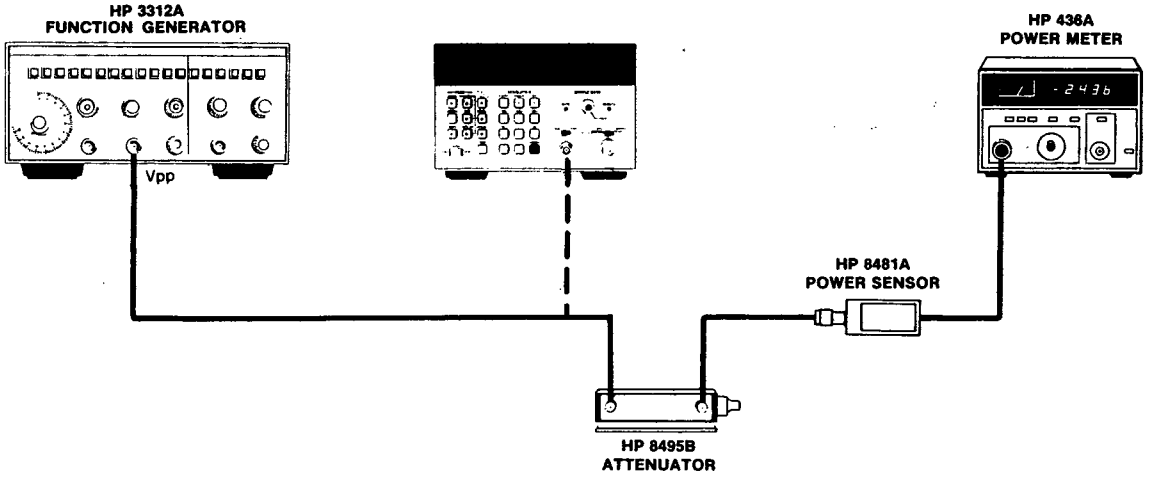

- Set the 8495B to 10 dB.
- Set the 3312A to 13 MHz sine wave with AMPLITUDE set to 10. Adjust amplitude vernier for a +15 dBm output level (+5 dBm on 436A).
- Set the 5342A to AMPL mode, 50Ω, 10 Hz—500 MHz range and connect the 3312A output to the 5342A input. Increase the 3312A output until the 5342A measures +20 dBm.
- Disconnect output of 3312A from 5342A and connect it to 8495B. Power meter should display +10 dBm ±1.5 dB (allowing for the +10 dB of 8495B). Enter on operational verification record (*Table 4-1*).
- Reconnect 3312A to 5342A and increase power output until 5342A "dashes" the display to indicate overload. This must occur at a level greater than +20 dBm. Enter on operational verification record.

4-16. 500 MHz—18 GHz Input Sensitivity Test (Standard and Option 003 Instruments Only)

Specification: Sensitivity = -25 dBm, 500 MHz—12.4 GHz
= -20 dBm, 12.4 GHz—18 GHz.

For Option 003:

Sensitivity = -22 dBm, 500 MHz—12.4 GHz
= -15 dBm, 12.4 GHz—18 GHz.

Description: The 5342A is set to the 500 MHz—18 GHz range and a signal at the rated sensitivity is applied to the type N connector. The frequency is slowly varied over the range of 500 MHz to 12.4 GHz and the 5342A is checked for proper counting. The output level of the test generator is increased to the second value, the frequency is slowly varied from 12.4 GHz to 18 GHz, and the 5342A checked for proper counting.

Setup:

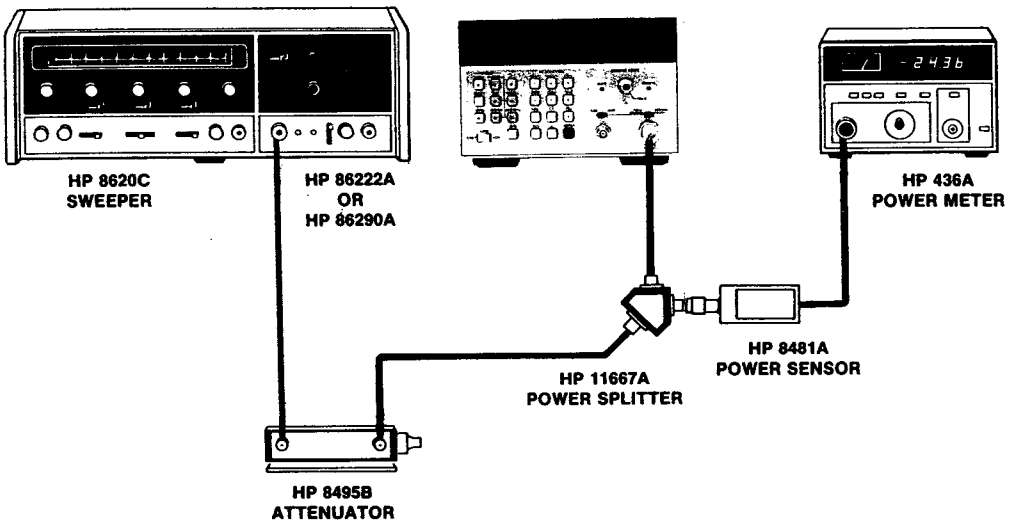

- Set the 5342A to the 500 MHz—18 GHz range.
- Connect the 11667A Power Splitter directly to the 5342A type N connector. Connect the 8481A power sensor directly to the other output port of the 11667A power splitter.
- Set the 8620C with the appropriate plug-in (86222A for 500 MHz to 2 GHz, 86290A for 2 GHz—18 GHz) and the 8495B step attenuator to the rated sensitivity as measured on the 436A. Remember that the 5342A with Option 003 has different specifications.
- Slowly increase the 8620C frequency over the range and verify that the 5342A counts properly.
- Measure actual sensitivity at 1 GHz, 12.4 GHz, and 18 GHz. Enter on operational verification record (*Table 4-1*).

4-17. 500 MHz—18 GHz Input Minimum Level and Amplitude Accuracy Test (Option 002)

Specification: ±1.5 dB accuracy for frequencies from 500 MHz to 18 GHz.
Minimum level:
-22 dBm 500 MHz—12.4 GHz
-15 dBm 12.4 GHz—18 GHz

Description: A signal at the minimum level is applied to the 5342A and 436A power meter and is varied over the frequency range. The amplitude reading of the 5342A is compared to the 436A Power Meter (calibration factor included).

Setup:

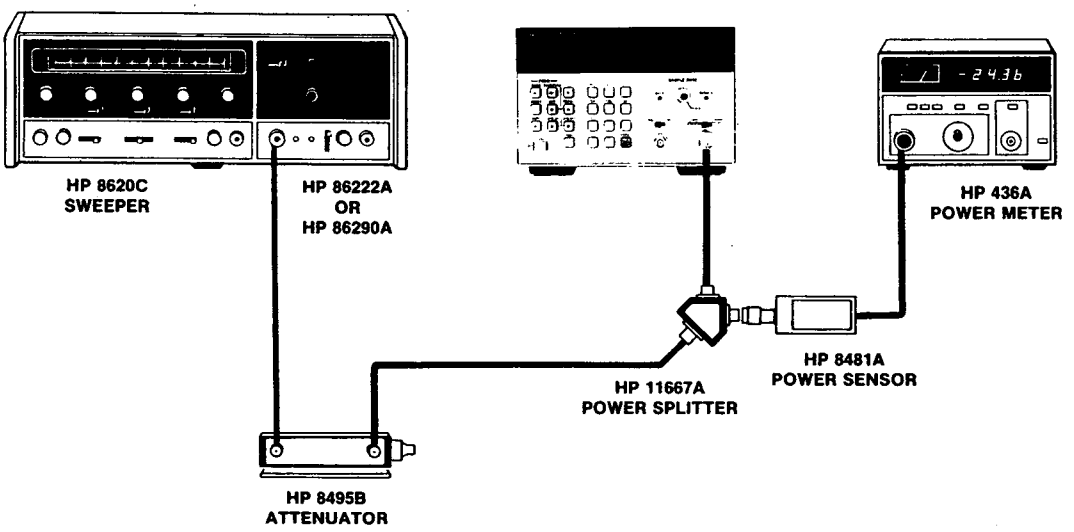

- Connect the 11667A directly to the 5342A type N connector and connect the 8481A directly to the other 11667A output.
- Set the 8620C at 500 MHz and adjust the output level and the step attenuator for -22 dBm as measured on the 436A Power Meter.
- Set the 5342A to the 500 MHz—18 GHz range and select amplitude mode. Slowly vary the 8620A up to 12.4 GHz and verify correct 5342A display.
- Take measurements at 1 GHz and 12.4 GHz. Verify that the 436A reading is within ±1.5 dB of the 5342A reading. (Be sure to change the 436A calibration factor with frequency.) Record difference between 436A and 5342A readings on verification record.
- Set the 8620C to 12.4 GHz and adjust the output level to -15 dBm as measured on the 436A Power Meter. Slowly vary the 8620C up to 18 GHz and verify correct 5342A display.
- Take a measurement at 18 GHz and verify that the 5342A is within ±1.5 dB of the 436A reading (be sure to adjust 436A calibration factor). Record difference between 436A and 5342A readings on verification record (*Table 4-1*).

4-18. 500 MHz—18 GHz High Level Test

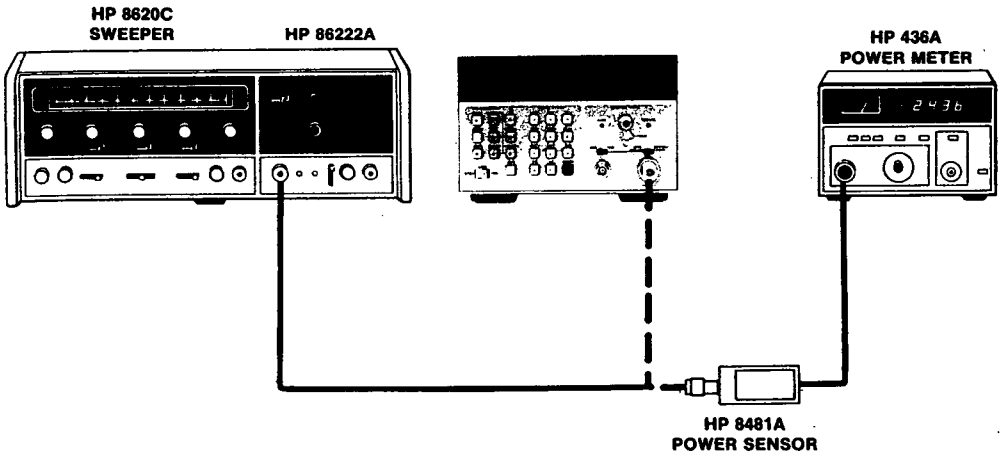

For Standard Instrument:

- Set the 8620C to 1 GHz at +5.0 dBm as measured by the 436A Power Meter. Connect the 8620C output to the 5342A and verify that the counter counts 1 GHz.
- Increase the level of the 8620C output until the counter's display fills with dashes. Measure this level on the 436A and verify that it is greater than +5 dBm. Enter on verification record (*Table 4-1*).

For Option 002 Instruments:

- Set 5342A to 500 MHz—18 GHz range and AMPL mode.
- Set the 8620C to 1 GHz at a level of +10 dBm as measured on the 436A.
- Connect the 8620C output to the 5342A and verify that the 5342A counts 1 GHz. Enter difference between 5342A and 436A readings on verification record (*Table 4-1*).

4-19. OPTION 011 HP-IB VERIFICATION PROGRAM

4-20. The 9825A program listed in *Table 4-2* exercises the 5342A through various operating modes, described below, via its HP-IB Interface. If the 5342A successfully completes all phases of the verification program, then there is a high probability that the HP-IB Interface (A15 assembly) is working properly. If the 5342A does not respond as described, refer to HP-IB troubleshooting in Section VIII.

NOTE

Prior to conducting the performance test, check the A15 board revision letter (adjacent to the board part number). If the revision letter is D or later, check the LSRQ line to pin $\overline{13}$ to be sure the jumper is installed as shown in *Figure 8-38*.

4-21. To perform the verification, set up the 5342A as shown and set its rear panel address switches to address Ø7.

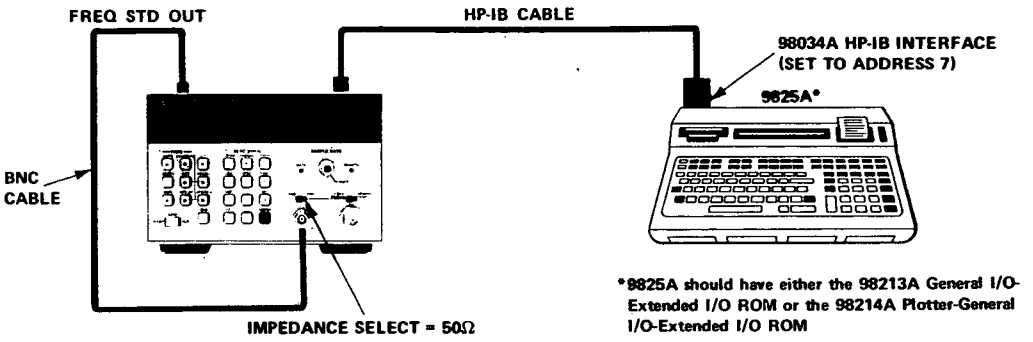

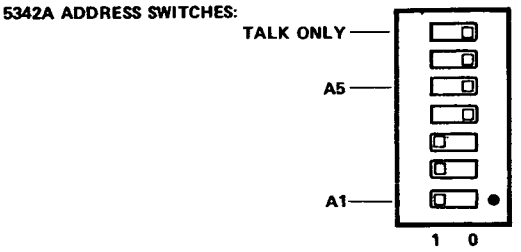

4-22. The program listed in *Table 4-2* may be keyed into the 9825A or may be loaded from a HP-IB Verification Cassette, HP P/N 59300–10001, (Revision B or later) which also contains HP-IB verification programs for the 59300 series of instruments. To run the program on the cassette, insert the cassette into the 9825A, load file Ø, and press RUN. Enter "5342" when the instrument mode number is requested and select code "7Ø7" when select code is requested. The 9825A will then load the 5342A verification program into memory.

4-23. Apply power to the 5342A and verify that the counter powers up in AUTO mode and REMOTE off. Verify that when the range switch is placed in the 10 Hz—500 MHz position and impedance select to 50Ω, the counter counts its 10 MHz time base.

4-24. The program goes through 14 check points for the standard instrument and an additional 4 check points for the amplitude option (002). The information in *Table 4-3* tells what occurs during each test and what should be observed by the operator if the test has been successfully completed. At the conclusion of each test, the program stops and displays the current check point. To advance to the next test, simply press CONTINUE. If it is desired to repeat a test, set the variable L to 1 via the keyboard (1→L EXECUTE). To go on to the next test after looping, set L back to Ø when the program halts (Ø→L EXECUTE). Record on operational verification record (*Table 4-1*).

4-25. When the 9825A displays "AMPL OPT?" at the end of check point 14, enter "YES" if the 5342A has Option 002. Enter "NO" if the amplitude option is not present.

4-26. *Table 4-4* is a sample printout from the 9825A.

Table 4-1. Operational Verification Record

5342 S/N _____ *Date* _____

PARAGRAPH NUMBER	TEST	RESULTS PASS	RESULTS FAIL
4-12	Self-Test		
4-13 (All except Option 002)	10 Hz—500 MHz Input Sensitivity Test (50Ω/1 MΩ): 50Ω: 10 MHz		
	50Ω: 100 MHz		
	50Ω: 520 MHz		
	1 MΩ: 25 MHz		
4-14 (Option 002 only)	10 Hz—500 MHz Input (50Ω) Minimum Level and Amplitude Accuracy Test: Readings within ±1.5 dB? 10 MHz		
	100 MHz		
	520 MHz		
415 (Option 002 only)	10 Hz—500 MHz Input (50Ω) Maximum Input Test: 436 reading >10 dB when display dashes?		
4-16 (All except Option 002)	500 MHz—18 GHz Input Sensitivity Test: Sensitivity @ 1 GHz		
	12.4 GHz		
	18 GHz		
4-17 (Option 002 only)	500 MHz—18 GHz Input Minimum Level and Amplitude Accuracy Test: 436A readings within ±1.5 dB? 1 GHz		
	1.24 GHz		
	18 GHz		
4-18 (All)	500 MHz—18 GHz High Level Test: Standard, >5 dBm dashes display?		
	Options 002 counts @ 1 GHz, +10 dBm		
4-19 through 4-26 (Option 011 only)	HP-IB Verification		
4-27 (Option 004 only	DAC Output Test		

Table 4-2. Model 9825A Program

```
0: dim C$[40];dsp "MODEL 5342A Frequency Counter";wait 2000
1: "code":ent "select code?",S
2: if S=721;dsp "error: calculator address";wait 1000;gtc "code"
3: if S>730;dsp "out of address range→high";wait 1000;gto "code"
4: if S<700;dsp "out of address range→low";wait 1000;gto "code"
5: dev "ctr",S;prt "5342A HP-IB TEST";spc 2
6: prt "----------------","CHECK POINT 1"
7: rem "ctr";beep
8: prt "*REMOTE     on","*AUTO       on";spc 2
9: dsp "CHECK POINT 1--Press CONTINUE"
10: stp
11: if L=1;gto 7
12: prt "----------------","CHECK POINT 2"
13: wrt "ctr","M";beep
14: dsp "MANUAL MODE";wait 5000
15: wrt "ctr","AU";beep
16: prt "*MANUAL     off","*AUTO        on";spc 2
17: dsp "CHECK POINT 2--Press CONTINUE"
18: stp
19: if L=1;gto 13
20: prt "----------------","CHECK POINT 3"
21: wrt "ctr","OM1";beep;dsp "FREQ OFFSET mode";wait 5000
22: wrt "ctr","OM0";beep
23: prt "*OFS[MHZ]  off";spc 2
24: dsp "CHECK POINT 3--Press CONTINUE"
25: stp
26: if L=1;gto 21
27: prt "----------------","CHECK POINT 4"
28: wrt "ctr","L";beep;dsp "Low Range";wait 5000
29: wrt "ctr","H";beep
30: prt "Low Range  10MHz","High Range","     00000000000";spc 2
31: dsp "CHECK POINT 4--Press Continue"
32: stp
33: if L=1;gto 28
34: prt "----------------","CHECK POINT 5"
35: wrt "ctr","F";beep;dsp "FM Mode";wait 5000
36: wrt "ctr","C";beep
37: prt "*ASTERISK  off"
38: dsp "CHECK POINT 5--Press Continue";spc 2
39: stp
40: if L=1;gto 35
```

Table 4-2. Model 9825A Program (Continued)

```
41: prt "----------------","CHECK POINT 6"
42: 3→X
43: fmt 1,"SR",f.0,"SR1";wrt "ctr.1",X;beep
44: X+1→X;wait 2000;if X=10;gto +2
45: gto -2
46: prt "*RES   1MHZ"
47: dsp "CHECK POINT 7--Press Continue"
48: spc 2;stp
49: if L=1;gto 42
50: prt "----------------","CHECK POINT 7","Enter Manual ","Center Freq"
51: ent X;fmt 3,"SM",f.0,"E"
52: if X<5e2 or X>1.8e4;prt "LIMIT ERROR";gto -2
53: wrt "ctr.3",X
54: spc 1;prt "Recall Center"," Freq";spc 1;fxd 0;prt "Does Center Freq=",X
55: dsp "CHECK POINT  8--Press Continue";spc 2;stp
56: if L=1;gto 51
57: prt "----------------","CHECK POINT 8","Enter Frequency","Offset[MHZ]"
58: ent X;fmt 4,"SOM",f.6,"E";wrt "ctr.4",X
59: fxd 6;prt "Recall OFS[MZ]";spc 1;prt "Does OFS[MHZ]=",X
60: dsp "CHECK POINT 9--Press Continue";spc 2;stp
61: if L=1;gto 58
62: prt "----------------","CHECK POINT 9"
63: wrt "ctr","AUHOM0SR3SR1";red "ctr",A
64: prt "CHECK=",A,"*RECALL    on"
65: dsp "CHECK POINT 10--Press CONTINUE";spc 2;stp
66: if L=1;gto 63
67: prt "----------------","CHECK POINT 10"
68: wrt "ctr","RELSR3T1"
69: trg "ctr";wait 4000;trg "ctr";beep;wait 4000;trg "ctr";beep
70: prt "2 Measurements--HOLD"
71: wrt "ctr","RESR9T0";spc 2;prt "Vary SR Pot";dsp "Press Continue";stp
72: wrt "ctr","T2"
73: spc 2;prt "Fast Sample";dsp "Press Continue";stp
74: wrt "ctr","T3";beep;wait 4000;wrt "ctr","T3";beep;wait 4000
75: wrt "ctr","T3";beep
76: spc 2;prt "3 measurements--sample then HOLD"
77: dsp "CHECK POINT 11--Press CONTINUE";spc 2;stp
78: if L=1;gto 68
79: prt "----------------","CHECK POINT 11"
80: wrt "ctr","LSR6T0ST1";dsp "Only If Adressed";wait 5000
81: red "ctr",A;beep;prt "freq=  ",A
82: wrt "ctr","ST2"
83: dsp "Wait Until Addressed";wait 5000;beep
84: red "ctr",A;prt "freq=  ",A
```

Table 4-2. Model 9825A Program (Continued)

```
85: dsp "CHECK POINT 12--Press Continue";spc 2;stp
86: if L=1;gto 80
87: prt "----------------","CHECK POINT 12";1→X
88: wrt "ctr","T1"
89: X+1→X;if X=500;trg "ctr";beep
90: rds("ctr")→A;dsp A
91: if X=1000;prt "status= ",A;gto +2
92: gto -3
93: dsp "CHECK POINT 12--Press Continue";stp
94: if L=1;gto 88
95: prt "----------------","CHECK POINT 13"
96: lcl "ctr";beep
97: spc 2;prt "REMOTE    Off";dsp "CHECK POINT 13--Press Continue";stp
98: if L=1;gto -2
99: prt "----------------","CHECK POINT 14"
100: rem "ctr";dsp "REMOTE"
101: llo 7;beep;prt "LOCAL LOCKOUT";dsp "Press Continue";stp
102: lcl 7;prt "Return to LOCAL"
103: spc 1;prt "REMOTE    Off";dsp "CHECK POINT 14--Press Continue";stp
104: rem 7
105: if L=1;gto -5
106: ent "AMPL OPT ?",C$;if C$="YES";gto +2
107: dsp "END";prt "END";stp
108: spc 4;prt "AMPL OPT 002";spc 2
109: prt "----------------","CHECK POINT 1"
110: wrt "ctr","AM1";beep;wait 5000
111: wrt "ctr","AM0";beep
112: prt "*AMPL        Off"
113: dsp "CHECK POINT 1--Press Continue";spc 2;stp
114: if L=1;gto 110
115: prt "----------------","CHECK POINT 2"
116: wrt "ctr","AM1OB1";beep;wait 5000;wrt "ctr","OB0"
117: prt "*OFS(DB)     Off"
118: dsp "CHECK POINT 2--Press Continue";spc 2;stp
119: if L=1;gto 116
120: prt "----------------","CHECK POINT 3";spc 1;prt "Enter AMP OFFSET"
121: ent X
122: if X<-99.9 or X>99.9;prt "LIMIT ERROR";gto -2
123: fmt 5,"SOB",f.1,"E";wrt "ctr.5",X
124: fxd 1;prt "Recall OFS(DB)","Does OFS(DB)=",X
125: dsp "CHECK POINT 3--Press Continue";spc 2;stp
126: if L=1;gto 120
127: prt "----------------","CHECK POINT 4"
128: dsp "Press Continue";stp



129: wrt "ctr","RELSR3ST2T3AM1OB0"
130: red "ctr",C$;prt C$;prt "END"
131: dsp "CHECK POINT 4-Press Continue";stp
132: if L=1;gto 129
133: end
*4993
```

Table 4-3. Model 9825A Program Description

CHECK POINT	TEST	OBSERVE ON 5342A
1	Remote	Front panel REMOTE should light.
2	Manual/Auto	Front panel MANUAL should light for approximately 5 seconds (AUTO goes off for 5 seconds). At conclusion of test, AUTO light should be on.
3	Frequency Offset-On/OFF	Front panel OFS (MHz) should light for approximately 5 seconds then go off.
4	Range - Low/High	The counter should display 10 MHz for approximately 5 seconds and then all 0's (high range - no input).
5	FM mode - On/Off	Front panel asterisk should light for approximately 5 seconds.
6	Resolution - 1 Hz to 1 MHz	The counter should display the 75 MHz check frequency with resolution from 1 Hz to 1 MHz. Each beep from calculator decreases resolution by one decade. There is approximately a 2-second wait between each change.
7	Set Manual Center Frequency	When the 9825A displays X?, enter a manual center frequency in MHz, no decimal points between 500 (MHz) and 18000 (MHz). Press CONTINUE. Verify that the counter was set to this manual center frequency by pressing RESET, RECALL, MANUAL. For example, if 12345 is entered (12.345 GHz manual frequency), then 12.345 GHz should be displayed by the counter when the manual center frequency is recalled.
8	Set Offset Frequency	When the 9825A displays X?, enter a frequency offset in MHz, decimal points allowed. Press CONTINUE. Verify that the counter was set to this frequency offset by pressing RESET, RECALL, OFS (MHz). For example, if 12345.678987 is entered, then 12.345678987 GHz should be displayed by the counter when the fequency offset is recalled.
9	Talk	The 9825A should print 75 MHz, which is the output of the 5342A in check mode. The 5342A RECALL light should flash on during output, indicating that it has been addressed as a talker.
10	Sample Rate — Hold, Front Panel Control, Fast Sample, Sample and Hold	In the first part of the test, the 5342A is placed in HOLD and a trg 722 is executed. For each beep of the calculator, observe that the 5342A GATE lights. After the second measurement, the 5342A is programmed for front panel control. Vary the front panel sample rate pot and observe the change in GATE delay. Press CONTINUE and the 5342A is programmed for fast sample. Verify that the front panel pot has no effect and that there is minimum time between measurements. Press CONTINUE and the 5342A is programmed for sample and HOLD. Before each beep from the 9825A, the 5342A is sent T3 which takes one measurement and holds.

Table 4-3. Model 9825A Program Description (Continued)

CHECK POINT	TEST	OBSERVE ON 5342A
11	Only If/Wait Until Addressed	At the start of this test, the 5342A is placed in the ONLY IF addressed mode. The GATE light should continually light, indicating that measurements are continually being made until the 5342A is addressed to talk. The counter is addressed to talk and the value is printed. The counter is then placed in WAIT UNTIL addressed. The GATE light should go out after the first measurement and remain out, indicating that the first measurement is being saved until the counter is addressed to talk. It is then addressed to talk and the value is printed by the printer.
12	Status Byte	The 5342A is put in HOLD and serial poll mode. Its status byte is displayed by the 9825A. After approximately 5 seconds, the 5342A is triggered and a measurement is taken. The status byte displayed by the 9825A should change from 0 to 80, indicating that the 5342A has taken a measurement.
13	Go To Local	LCL 722 is issued. The front panel REMOTE light should go off.
14	Local Lockout	The 5342A is returned to remote control and the local lockout command is issued. When the 9825A displays "press CONTINUE", press RESET on the 5342A and verify that the counter remains in REMOTE. Press CONTINUE on the 9825A and lcl 7 is issued. Verify that the 5342A goes to local.
AMPL OPTION 002:		
1	Amplitude-On/Off	Front panel AMPL should light for approximately 5 seconds and then of off.
2	Amplitude Offset-On/Off	Front panel OFS (dB) should light for approximately 5 seconds and then go off.
3	Set Amplitude Offset	When the 9825A displays X?, enter an amplitude offset in dB inthe range of -99.9 to +99.9. Press CONTINUE. Verify that the 5342A was set to this offset by pressing RESET, RECALL, OFS (dB).
4	AMPL Output	The 5342A is placed in amplitude mode and addressed to talk. Verify proper output format as given in sample printout in *Table 4-4*.

Table 4-4. Sample Printout

```
5342A HP-IB TEST


----------------
CHECK POINT 1
*REMOTE      on
*AUTO        on


----------------
CHECK POINT 2
*MANUAL      off
*AUTO         on


----------------
CHECK POINT 3
*OFS[MHZ]   off


----------------
CHECK POINT 4
Low Range   10MHz
High Range
      00000000000


----------------
CHECK POINT 5
*ASTERISK   off


----------------
CHECK POINT 6
*RES    1MHZ


----------------
CHECK POINT 7
Enter Manual
Center Freq

Recall Center
 Freq

Does Center Freq
=         12345.00


----------------
CHECK POINT 8
Enter Frequency
Offset[MHZ]
Recall OFS[MZ]

Does OFS[MHZ]=
 12345.678987000


----------------
CHECK POINT 9
CHECK=
 7.500000000e 07
*RECALL     on


----------------
CHECK POINT 10
3 Measurements--
HOLD

Vary SR Pot

Fast Sample

3 measurements--
sample then HOLD


----------------
CHECK POINT 11
freq=
 1.000000000e 07
freq=
 1.000000000e 07


----------------
CHECK POINT 12
status=
    80.000000000


----------------
CHECK POINT 13


REMOTE      Off


----------------
CHECK POINT 14
LOCAL LOCKOUT
Return to LOCAL

REMOTE      Off


AMPL OPT 002


----------------
CHECK POINT 1
*AMPL         Off


----------------
CHECK POINT 2
*OFS(DB)      Off


----------------
CHECK POINT 3

Enter AMP OFFSET
Recall OFS(DB)
Does OFS(DB)=
    10.100000000


----------------
CHECK POINT 4
F  00010.000000E
+06, A +12.0E+0
END
```

4-27. DIGITAL-TO-ANALOG CONVERTER (DAC) OUTPUT TEST (OPTION 004)

Specification: Accuracy = ±5 mV, ±0.3 mV/°C (from 25°C).

Description: The 5342A is set to the 500 MHz—18 GHz range and a 999 MHz signal is applied to the type N connector. A DVM is connected to the DAC OUT connector on the rear panel. The front panel keyboard is used to select digits 999 and the DVM observed for an indication of 9.99 volts dc. Then the ØØØ digits are selected and the DVM observed for Ø volts dc.

Setup:

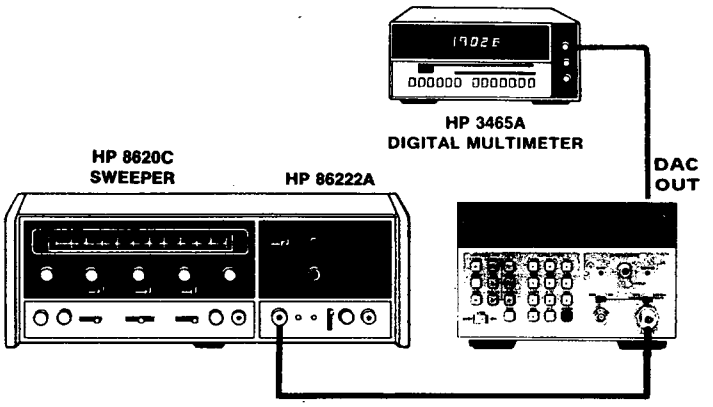

- Set the 5342A to the 500 MHz—18 GHz range, AUTO mode.
- Connect DVM to DAC OUT, set DVM to 20V range.
- Set the generator to 999 MHz as indicated on 5342A display.
- On 5342A keyboard, press:

SET | Blue Key | DAC | 3

- Observe DMV for indication of 9.99 ±0.01. Enter on operational verification record (*Table 4-1*).
- On 5342A keyboard, press:

SET | Blue Key | DAC | 6

- Observe DVM for Ø ±0.01. Enter on operational verification record.
- On 5342A keyboard, press:

SET | Blue Key | DAC | 5

- Observe DVM for 9.00 ±0.01. Enter on performance test record.

4-28. PERFORMANCE TEST PROCEDURES

4-29. 10 Hz—500 MHz Input Sensitivity Test, 50Ω (Standard and Option 003 Instruments Only)

Specification: 50Ω position, sensitivity = 25 mV rms for frequencies from 10 Hz—520 MHz.

Description: The 5342A is set to the 10 Hz—500 MHz range and a signal at the rated sensitivity is applied to the BNC input. The frequency is slowly swept up to 10 MHz at constant level and the 5342A reading is checked for the proper count. For the range of 10 MHz to 520 MHz, a different generator is used. For Option 002, sensitivity is tested in paragraph 4-37.

Setup:

a. 10 Hz—10 MHz

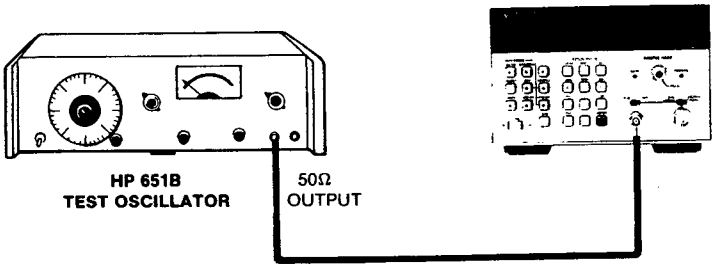

- Set the 5342A to 50Ω, 10 Hz—500 MHz range, 1 Hz resolution.
- Set 651B to 10 Hz and 25 mV rms.
- Increase the frequency of the 651B and verify that the 5342A counts proper frequency from 10 Hz to 10 MHz.
- Measure actual sensitivity by decreasing the 651B level until the 5342A gives an unstable count at these frequencies: 10 Hz, 1 kHz, 500 kHz, 5 MHz, 10 MHz. Enter on performance test record (*Table 4-1*).

b. 10 MHz—520 MHz

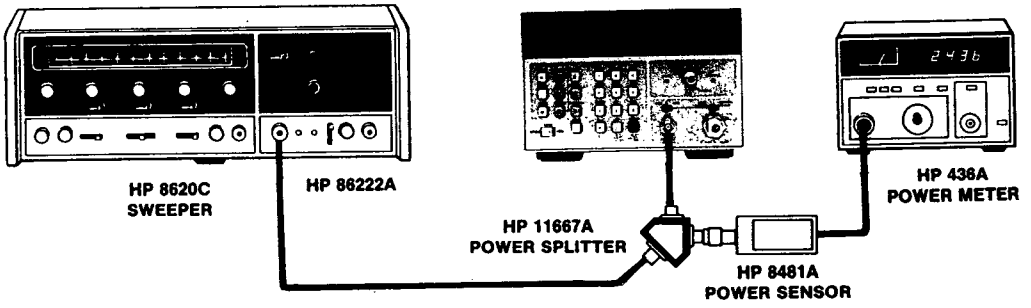

- 5342A settings remain unchanged.
- Set 436A power meter for AUTO range and dBm mode.
- Set the 86222A for INT leveling and adjust the output power level for a 436A reading of -19.3 dBm (25 mV rms into 50Ω).
- Increase the frequency of the 8620C over the range of 10 MHz to 520 MHz and verify that the 5342A counts proper frequency. Use 436A to verify input power.
- Measure actual sensitivity at 50 MHz, 250 MHz, 520 MHz, and enter on performance test record (*Table 4-5*).

4-30. 10 Hz—500 MHz Input Sensitivity Test, 1 MΩ

Specifications: 1 MΩ position, sensitivity = 50 mV rms for frequencies from 10 Hz—25 MHz.

Setup:

a. 10 Hz—10 MHz

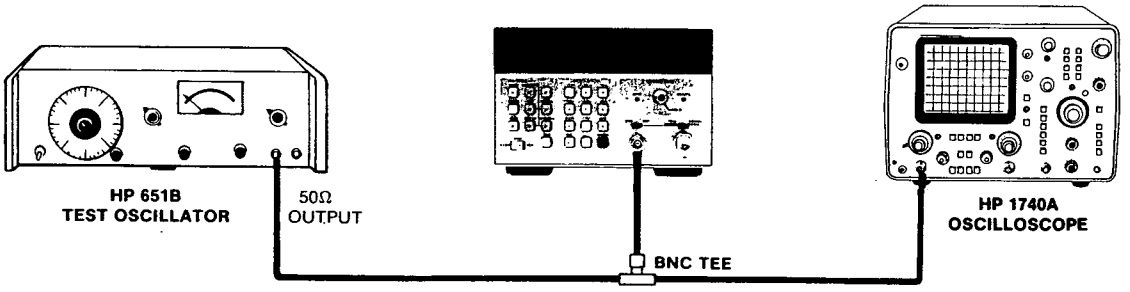

- Set the 5342A to 1 MΩ, 10 Hz—500 MHz range.
- Set the 651B to 10 Hz and adjust level for 141 mV p-p signal (50 mV rms).
- Increase the frequency of the 651B and verify that the 5342A counts proper frequency from 10 Hz to 10 MHz.
- Measure actual sensitivity at 10 Hz, 1 kHz, 500 kHz, 5 MHz, and 10 MHz by monitoring p-p voltage on oscilloscope. Enter on performance test record (*Table 4-5*).

b. 10 MHz—25 MHz

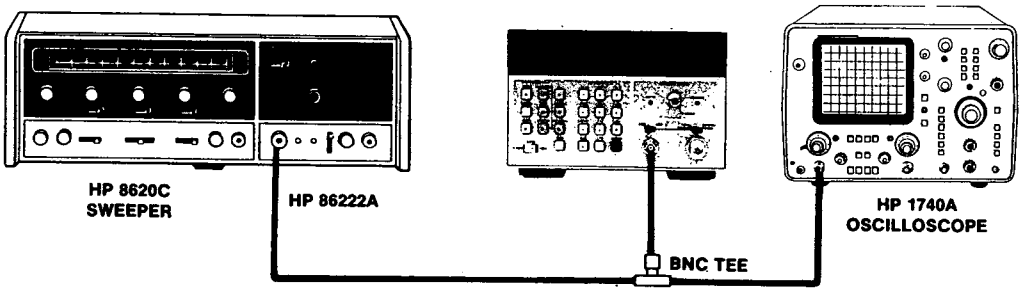

- 5342A settings remain unchanged.
- Adjust 86222A output for a 141 mV p-p (50 mV rms) reading on the 1740A.
- Increase the frequency of the 8620C from 10 MHz—25 MHz and verify that the counter counts properly. Monitor the output level on the oscilloscope for 141 mV p-p (50 mV rms) over the range.
- Measure actual sensitivity at 15 MHz, 25 MHz, and enter on performance test record (*Table 4-5*).

4-31. 500 MHz—18 GHz Input Sensitivity Test (Standard and Option 003 Instruments Only)

Specification: Sensitivity = -25 dBm, 500 MHz—12.4 GHz
= -20 dBm, 12.4 GHz—18 GHz

For Option 003:

Sensitivity = -22 dBm, 500 MHz—12.4 GHz
= -15 dBm, 12.4 GHz—18 GHz

Description: The 5342A is set to the 500 MHz—18 GHz range and a signal at the rated sensitivity is applied to the type N connector. The frequency is slowly varied over the range of 500 MHz to 12.4 GHz and the 5342A is checked for proper counting. The output level of the test genertor is increased to the second value, the frequency is slowly varied from 12.4 GHz to 18 GHz, and the 5342A checked for proper counting. For Option 002, sensitivity is tested in paragraph 4-37.

Setup:

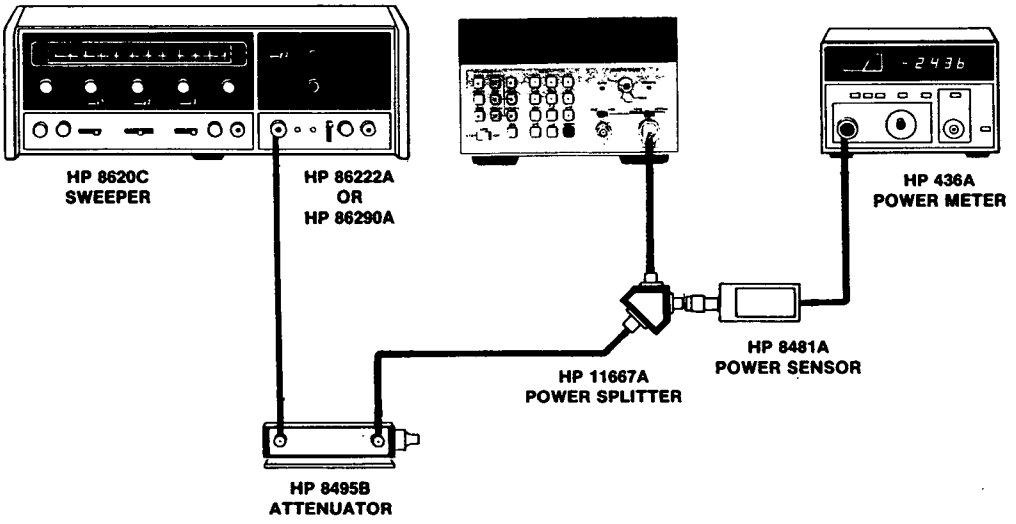

- Set the 5342A to the 500 MHz—18 GHz range, AUTO mode.
- Connect the 11667A power splitter directly to the 5342A type N connector. Connect the 8481A power sensor directly to the other output port of the 11667A power splitter.
- Set the 8620C with the appropriate plug-in (86222A for 500 MHz to 2 GHz, 86290A for 2 GHz—18 GHz) and the 8495B step attenuator to the rated sensitivity as measured on the 436A. Remember that the 5342A with Option 003 has different specifications.
- Slowly increase the 8620C frequency over the range and verify that the 5342A counts properly.
- Measure actual sensitivity at 500 MHz, 1 GHz, 5 GHz, 10 GHz, 12.4 GHz, 15 GHz, 17 GHz, and 18 GHz. Enter on performance test record (*Table 4-5*).

4-32. 500 MHz—18 GHz Input SWR Test

Specification: <2:1 500 MHz—10 GHz
<3:1 10 GHz—18 GHz

Option 002: <2:1 500 MHz—18 GHz (during amplitude measurements)
<5:1 500 MHz—18 GHz (during frequency measurements)

Option 003: <5:1 500 MHz—18 GHz

Description: Using an 8755B Swept Amplitude Analyzer, the return loss of the 5342A high frequency input is measured over the range of 2 GHz to 18 GHz. An SWR of 2:1 (9.5 dB return loss) is worst case for frequencies below 10 GHz and an SWR of 3:1 (6 dB return loss) is worst case for frequencies from 10 GHz—18 GHz. The dual directional coupler outputs the incident power and reflected power to the 11664A detectors. The 8755B performs the ratio and displays return loss directly.

Setup:

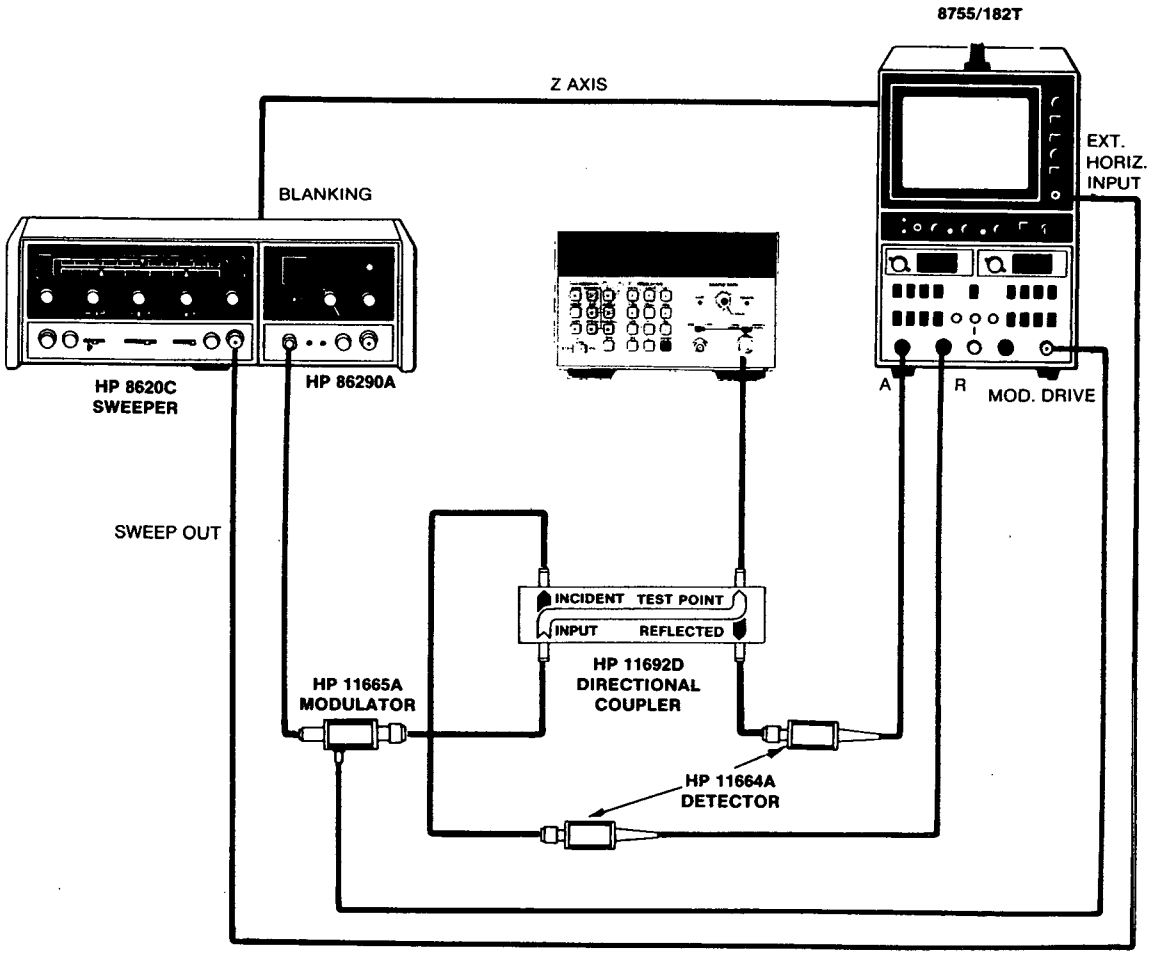

- Set the 8620C to sweep from 2 GHz to 18 GHz with the FAST vernier set full clockwise.
- Set the 86290A to the 2—18 GHz band and a power level of approximately +5 dBm, internally leveled.
- Set the 8755B for SMOOTHING (ON), OFFSET CAL (ON), DISPLAY (A/R), THUMBWHEELS (ØØ), scale 5 dB/div. Set the 182T to EXT CAL.
- To calibrate the 8755B, short (or open) the 11692D coupler output which feeds the 5342A. Adjust the OFFSET CAL of the A channel to center the scope display at the center horizontal line of the 182T CRT.
- Connect 5342A to 11692D coupler and set A channel offset dB on the 8755B to -09. The trace should be below the center line for frequencies below 10 GHz as shown below. Verify that the return loss is >9.5 dB from 2—10 GHz and >6.0 dB from 10—18 GHz (standard instrument). For Option 003, verify that the return loss is >3.5 dB over the range of 2—18 GHz. Enter the minimum return loss for each range of frequency on the performance test record (*Table 4-5*).

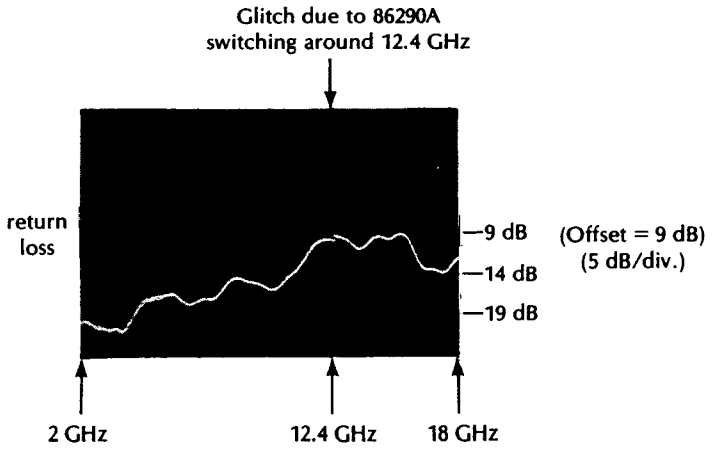

FOR AMPLITUDE OPTION, put the 5342A in diagnostic mode 5 (press SET, SET 5) to prevent switching between the sampler input and the peak detector input. Measure SWR as described above and verify that for amplitude measurements, return loss is >9.5 dB for frequencies from 2 GHz—18 GHz. Next put the 5342A in AUTO and frequency only so that amplitude measurements are not made. Verify that the return loss is >3.5 dB for frequencies from 2—18 GHz (SWR <5:1).

4-33. 500 MHz—18 GHz Maximum Input Test

Specification: +5 dBm (Standard Instrument)
+20 dBm (Options 002, 003)

Description: The 5342A display will fill with dashes in an overload condition. The detecting circuits controlling the "dashing" of the display exhibit approximately 2 dB hysteresis so that once the threshold is exceeded, the level must be dropped by approximately 2 dB before the counter will count again. Consequently, it is critical that in this test the level be approached from below the +5 dBm limit. Since the sampler response is greatest near 1 GHz, this test is made at 1 GHz.

The standard instrument is tested first and then the Option 002 or 003, (which use a thin film attenuator in front of the sampler to increase the maximum allowable input to +20 dBm) is tested (if installed).

Setup: (Standard Instrument)

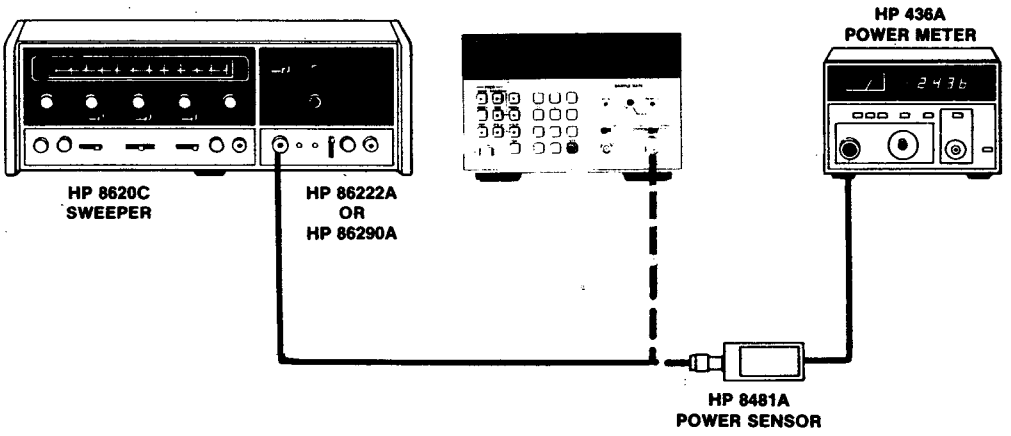

- Set the 8620C to 1 GHz at +5.0 dBm as measured by the 436A Power Meter. Connect the 8620C output to the 5342A and verify that the counter counts 1 GHz.
- Increase the level of the 8620C output until the counter's display fills with dashes. Measure this level on the 436A and verify that it is greater than +5 dBm. Enter the level (at which the display is dashed) on the performance test record (*Table 4-5*).

- For Options 002 003 only:

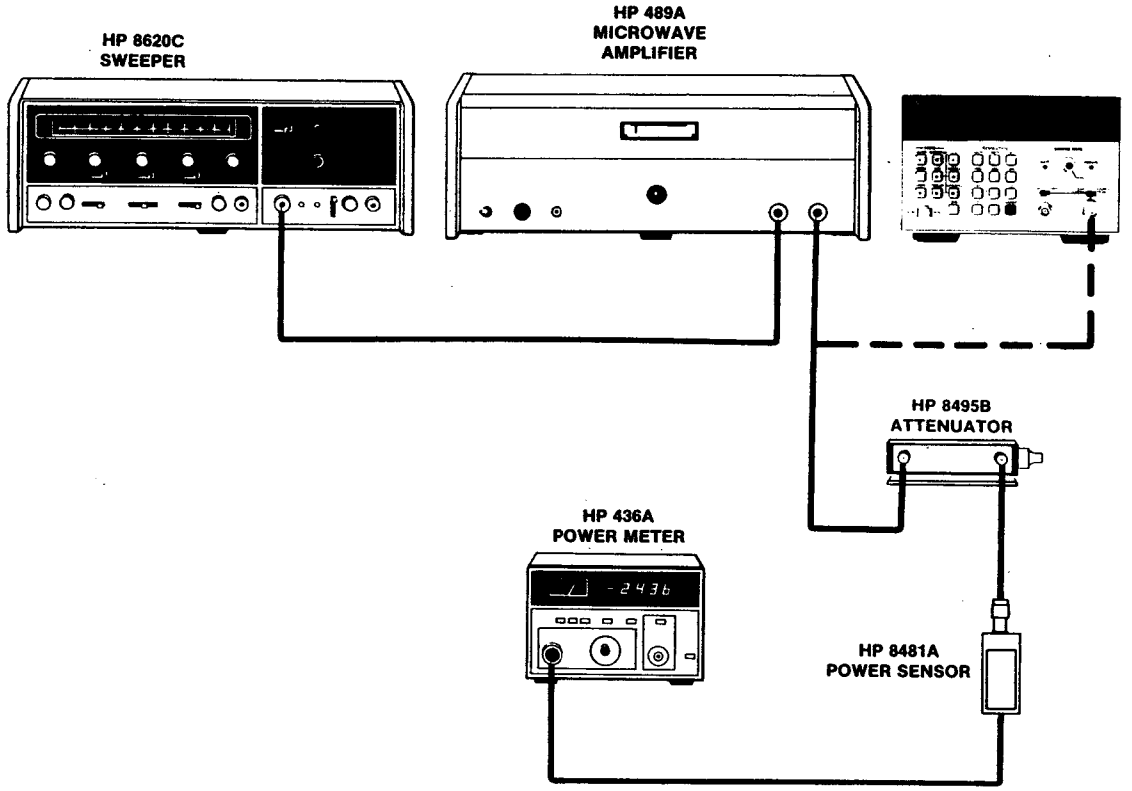

- Set the 8495B to 10 dB.
- Set the 8620C to 1 GHz and connect the 8495B output to the 8481A power sensor. Adjust the 489A gain control and 86222A gain control for a 489A output level of +15 dBm (+5 dBm displayed on 436A).
- Connect the 489A output to the 5342A and verify that the counter counts 1 GHz. Increase the signal level until 5342A (Option 002) displays +20 dBm ±1.5 dB. Enter on performance test record. Reconnect signal to 5342A and increase level until display fills with dashes. This must occur at a level >+20 dBm. Enter the level (at which the display is dashed) on the performance test record (*Table 4-5*). Be sure to add 10 dB to 436A readings to account for the 8495B attenuator.,

4-34. FM Tolerance Test

Specification: 20 MHz peak-to-peak (CW mode)
50 MHz peak-to-peak (FM mode)

Description: The FM tolerance specification indicates the worst case FM deviation which can be present on a carrier that the counter can acquire and count. If the deviations are symmetrical about the carrier, then the counter averages out the deviations and displays the carrier frequency.

A rear panel switch controls the CW mode and FM mode.

In this test, a function generator is used to FM the 8620C and the output is examined on a spectrum analyzer to measure the peak-to-peak deviation. The amplitude of the modulating waveform is adjusted for a 20 MHz p-p deviation and then a 50 MHz p-p deviation.

Setup:

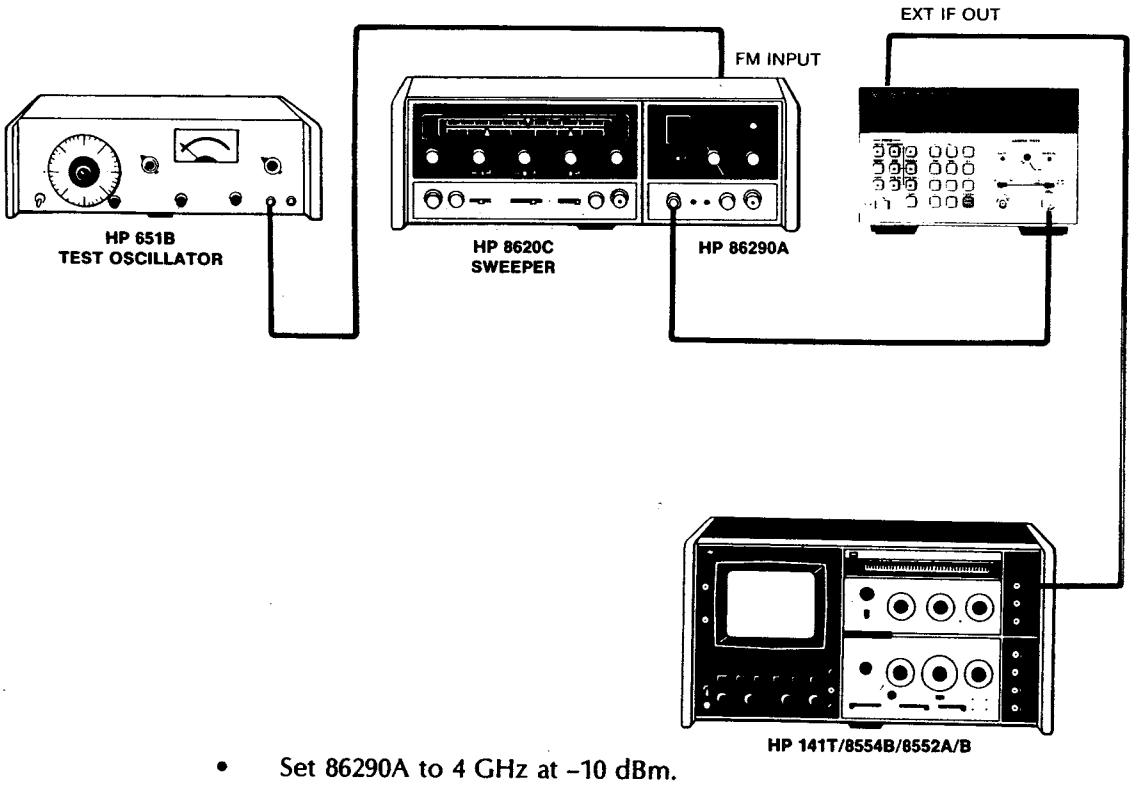

- Set 86290A to 4 GHz at -10 dBm.
- Put 5342A in 500 MHz—18 GHz range and AUTO mode. Observe IF OUT on the spectrum analyzer. Set 5342A to manual mode to setup peak-to-peak deviation.

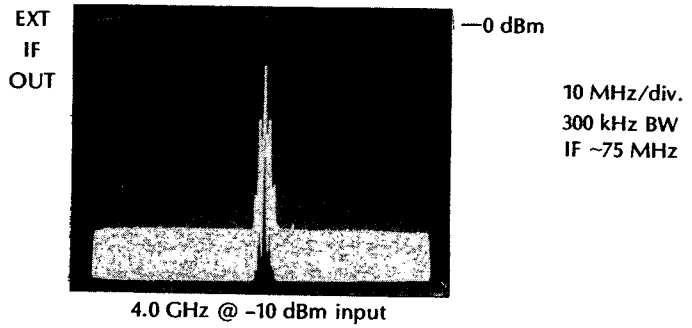

4.0 GHz @ -10 dBm input

- Apply modulating signal to EXT FM input on the rear panel of 86290A. Use a 100 kHz sine wave of sufficient amplitude to give 20 MHz p-p FM deviation as shown. (Modulating rate for this photo was 100 kHz.) Record on performance test record (*Table 4-5*).
- Switch the counter from manual to AUTO to verify that the counter will acquire and count the signal.

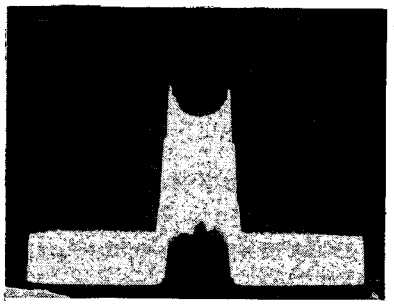

- If deviations are symmetrical about center frequency, the 5342A will average out the deviations and display the 4.0 GHz center frequency.
- Return the MAN mode. Increase amplitude of modulating waveform to product a 50 MHz p-p deviation as shown below (f_m = 100 kHz). Record on performance test record (*Table 4-5*).

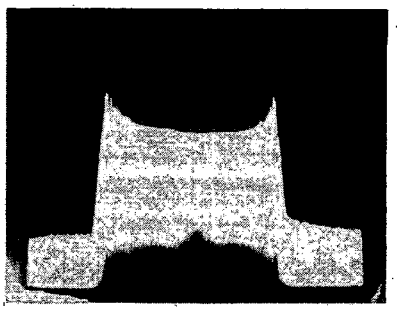

- Switch rear panel switch to FM. Switch counter from MAN to AUTO. Verify that the counter will acquire and count the signal.
- If deviations are symmetrical about the center frequency, the 5342A will average out the deviations and display the 4.0 GHz center frequency. For this case, the deviation is not symmetrical about the center frequency. To verify that the counter has passed the test, check that the displayed frequency is within 300 MHz of 4 GHz (if then N number computed is off by 1 due to excessive FM, then the displayed frequency will be off by 300 to 350 MHz).

4-35. Automatic Amplitude Discrimination Test

Specification: The 5342A measures the largest of all signals present, providing that the signal is 6 dB above any signal within 500 MHz; 20 dB above any signal, 500 MHz—18 GHz.

Description: In this test, two microwave generators are used to provide two signals into the 5342A. The relative level of the two signals is adjusted to the specification and the 5342A must count the higher amplitude signal.

Setup:

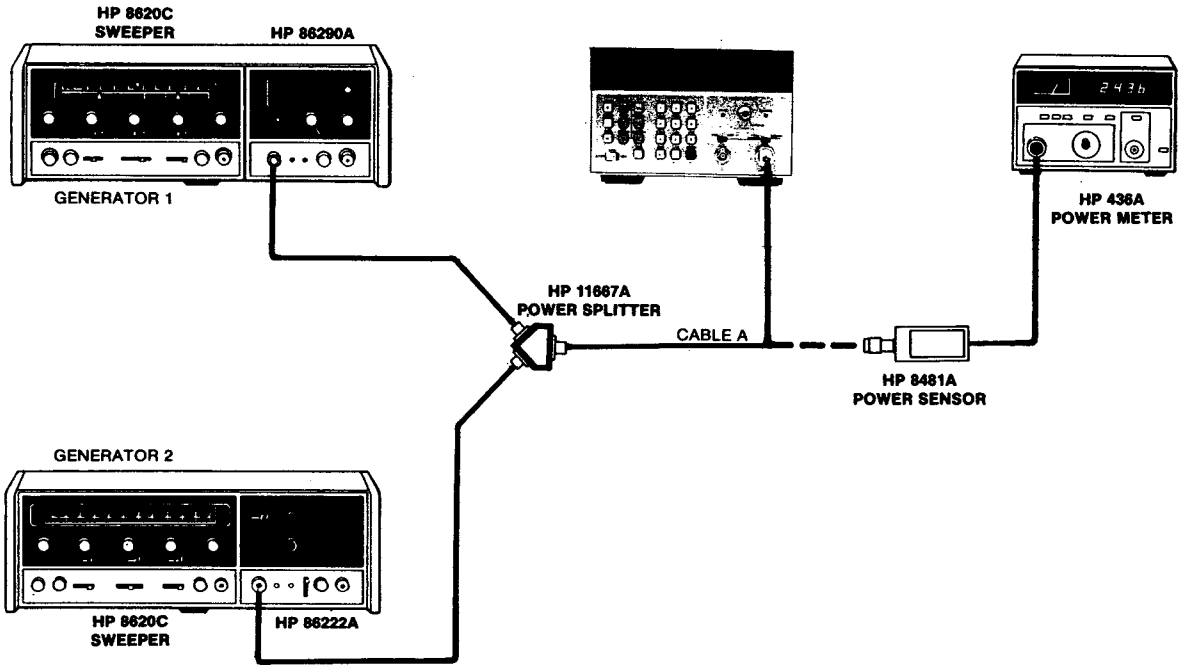

- Set generator 1 to 18 GHz and at a level to deliver -5 dBm to the 5342A. To set this level, disconnect generator 2 from the 11667A and terminate that input port of the 11667A with a 909A (Option 012) 50Ω termination. Connect the 8481A to the 5342A end of cable A and adjust the 86290A output for a -5 dBm reading.
- Set generator 2 to 500 MHz and at a level to deliver -25 dBm to the 5342A. To set this level, disconnect generator 1 from the 11667A input (reconnect generator 2 to 11667A) and terminate the generator 1 input of the 11667A with a 909A 50Ω termination. Connect the 8481A to the 5342A end of cable A and adjust 86222A for a -25 dBm reading.
- Connect both generators to the 11667A inputs. Connect cable A to the 5342A. Verify that the 5342A counts 18 GHz. Increase the level of generator 2 until the 5342A counts incorrectly — measure that level (by using the same procedure described above) and record on test record.
- Set generator 1 to 2.5 GHz and at a level to deliver -5 dBm to the 5342A using the technique described above. Set generator 2 to 2.0 GHz and at a level to delivery -11 dBm to the 5342A using the technique described above. Connect both generators to the 11667A and cable A to the 5342A. Verify that the 5342A counts 2.5 GHz. Increase generator 2 level until counter counts incorrectly — measure that level and record on test record (*Table 4-5*).

4-36. 500 MHz—18 GHz Input Minimum Level and Amplitude Accuracy Test (Option 002)

Specification: ±1.5 dB accuracy for frequencies from 500 MHz to 18 GHz
Minimum level:
-22 dBm 500 MHz—12.4 GHz
-15 dBm 12.4 GHz—18 GHz

Description: A signal at the minimum level is applied to the 5342A and 436A Power Meter and is varied over the frequency range. The amplitude reading of the 5342A is compared to the 436A Power Meter (calibration factor included).

Setup:

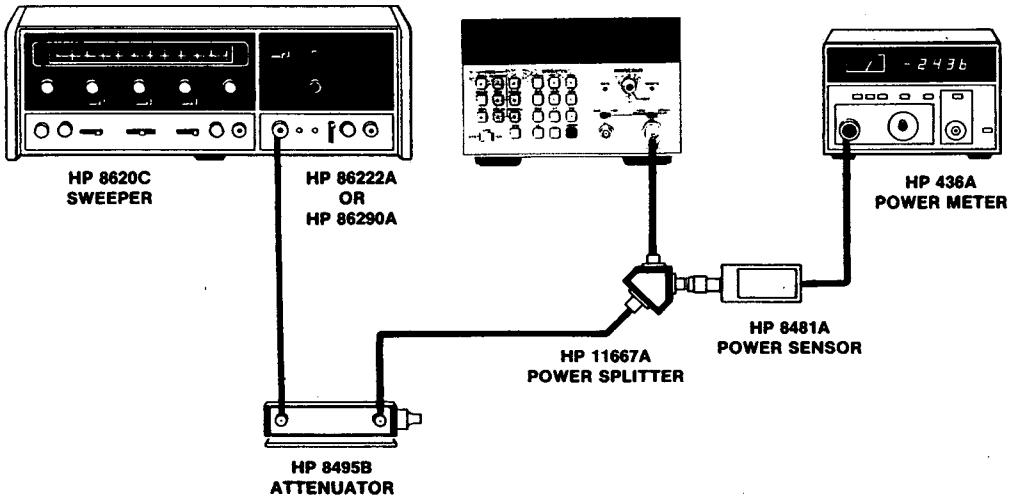

- Connect the 11667A directly to the 5342A type N connector and connect the 8481A directly to the other 11667A output.
- Set the 8620C at 500 MHz and adjust the output level and the step attenuator for -22 dBm as measured on the 436A Power Meter (8495B set for at least 10 dB).
- Set the 5342A to the 500 MHz—18 GHz range and select amplitude mode. Slowly vary the 8620C up to 12.4 GHz and verify that the 5342A counts correctly.
- Take measurements at 500 MHz, 1 GHz, 5 GHz, 10 GHz, 12.4 GHz. Verify that the 436A reading is within ±1.5 dB of the 5342A reading. (Be sure to change the 436A calibration factor with frequency.) At each frequency, increase level by taking out 10 dB in the 8495B attenuator and verify that the readings agree within ±1.5 dB. Record the actual 5342A amplitude readings on the performance test record (*Table 4-5*).
- Set the 8620C to 12.4 GHz and adjust the output level to -15 dBm as measured on the 436A Power Meter. Slowly vary the frequency to 18 GHz and verify that the 5342A counts correctly.
- Take measurements at 12.4 GHz, 15 GHz, 17 GHz, 18 GHz, and verify that the 5342A is within ±1.5 dB of the 436A reading (be sure to adjust 436A calibration factor). At each frequency, increase level by reducing 8495B by 10 dB and verify that readings again agree within ±1.5 dB. Record the actual amplitude readings on the performance test record (*Table 4-5*).

4-37. 10 Hz—500 MHz Input (50Ω) Minimum Level and Amplitude Accuracy Test (Option 002)

Specification: ±1.5 dB accuracy for frequencies from 10 MHz to 520 MHz
Minimum Level: -17 dBm.

Setup:

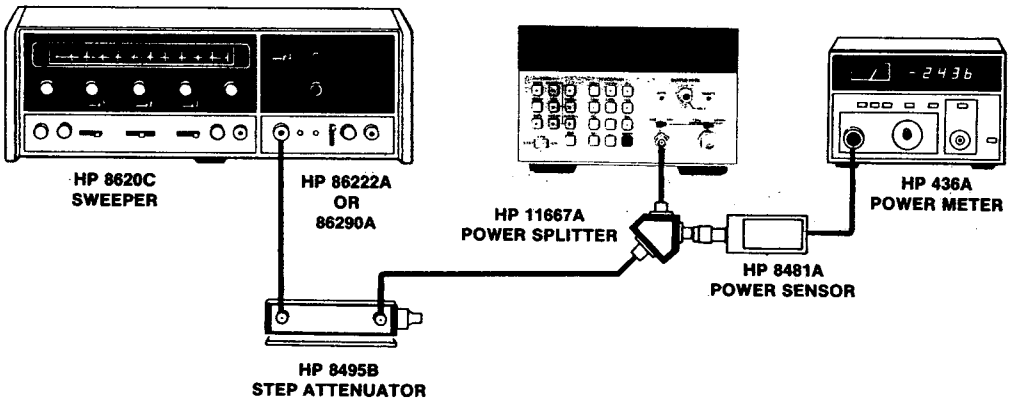

- Connect the 11667 directly (using type N to BNC adapter) to the 5342A BNC low frequency input. Connect 8481A directly to the other 11667A output.
- Set the 5342A to 10 Hz—500 MHz range, 50Ω, and amplitude mode.
- Set the 86222A to 10 MHz and adjust output level and 8495B for a level of -17 dBm as measured on the 436A Power Meter. (8495B set to 10 dB or greater.)
- Take a measurement at 10 MHz, 5 MHz, 100 MHz, 300 MHz, 520 MHz, and verify that 5342A reading is within ±1.5 dB of 436A reading. At each frequency, increase level by taking out 10 dB in the 8495B and verify that readings agree to within ±1.5 dB. Record the actual 5342A amplitude measurements on the performance test record (*Table 4-5*).

4-38. 10 Hz—500 MHz Input (50Ω) Maximum Input Test (Option 002)

Specification: +20 dBm

Setup:

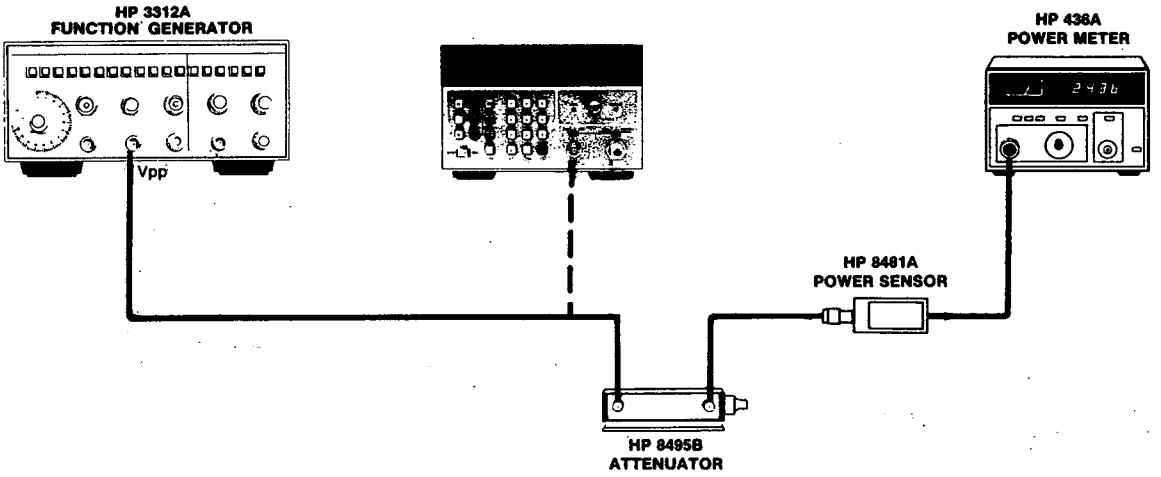

- Set the 8495B to 10 dB.
- Set the 3312A to 13 MHz sine wave with AMPLITUDE set to 10. Adjust amplitude vernier for a +15 dBm output level (+5 dBm on 436A).
- Set the 5342A to AMPL mode, 50Ω, 10 Hz—500 MHz range and connect the 3312A output to the 5342A input. Increase the 3312A output until the 5342A measures +20 dBm.
- Disconnect output of 3312A from 5342A and connect it to 8495B. Power meter should display +10 dBm ±1.5 dB (allowing for the +10 dB of 8495B). Record on performance test record (*Table 4-5*).
- Reconnect 3312A to 5342A and increase power output until 5342A "dashes" the display to indicate overload. This must occur at a level greater than +20 dBm. Record this level on performance test record (*Table 4-5*).

4-39. 10 Hz—500 MHz Input (50Ω) SWR Test (Option 002)

Specification: <1.8:1

Description: Using a lower frequency range directional coupler (such as the 778D), the test setup described in paragraph 4-13 is used to sweep the low frequency input over the range of 100 MHz to 500 MHz and the return loss is measured. Return loss must be >10.75 dB over the range.

Setup:

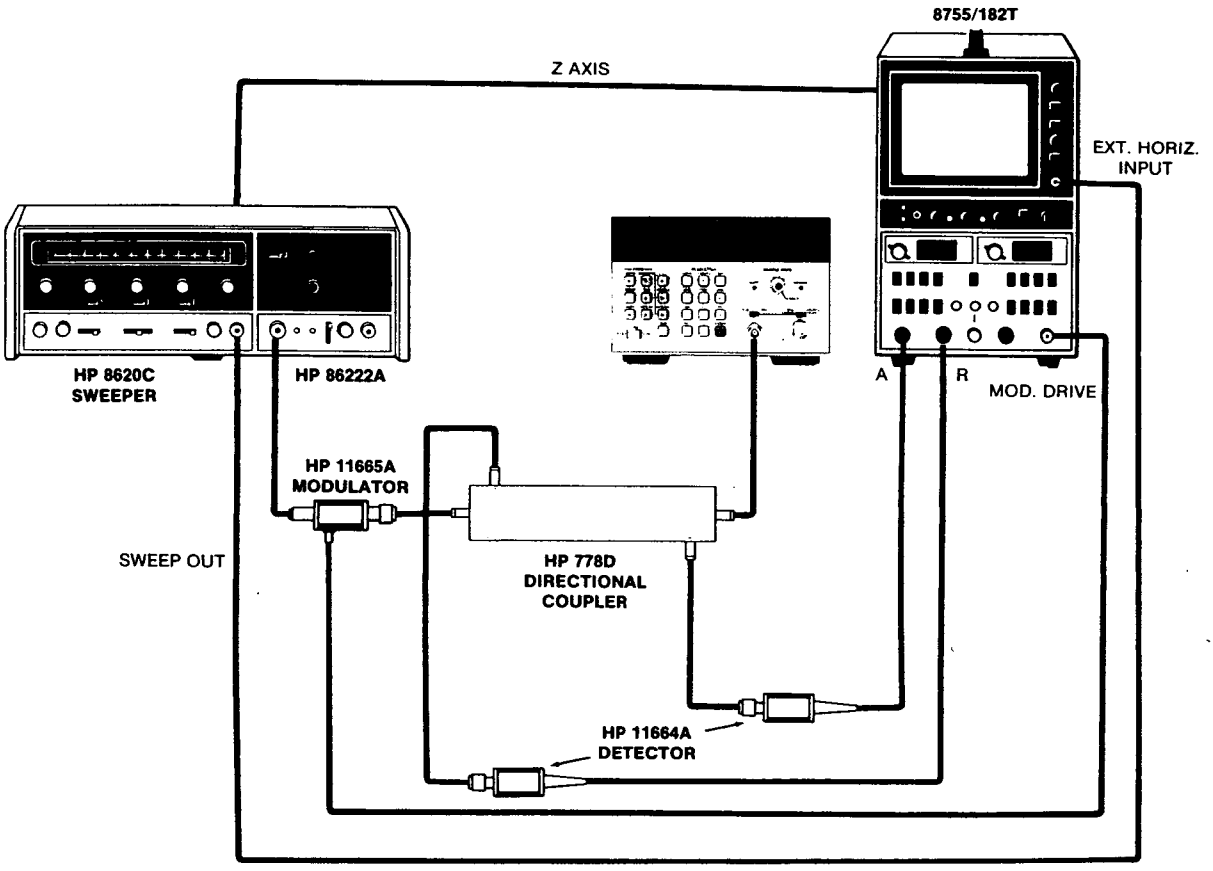

- Same as described in paragraph 4-32 except use the 86222A plug-in and setup to sweep from 100 MHz to 500 MHz. Replace the 11692D Dual Directional Coupler with the 778D Dual Directional Coupler.
- Calibrate the system with a short (or open) at the 778D output which normally feeds the 5342A low frequency input.
- Set the 5342A to 50Ω and diagnostic mode 5 (described in *Table 8-8*) to prevent switching between frequency and amplitude measurements. Verify that the return loss is >10.75 dB. Record on performance test record (*Table 4-5*).

4-40. Digital-to-Analog Converter (DAC) Output Test (Option 004)

Specification: Accuracy = ±5 mV, ±0.3 mV/°C (from 25°C)

Description: The 5342A is set to the 500 MHz—18 GHz range and a 999 MHz signal is applied to the type N connector. A DVM is connected to the DAC OUT connector on the rear panel. The front panel keyboard is used to select digits 999 and the DVM observed for an indication of 9.99 volts dc. Then the ØØØ digits are selected the DVM observed for Ø volts dc.

Setup:

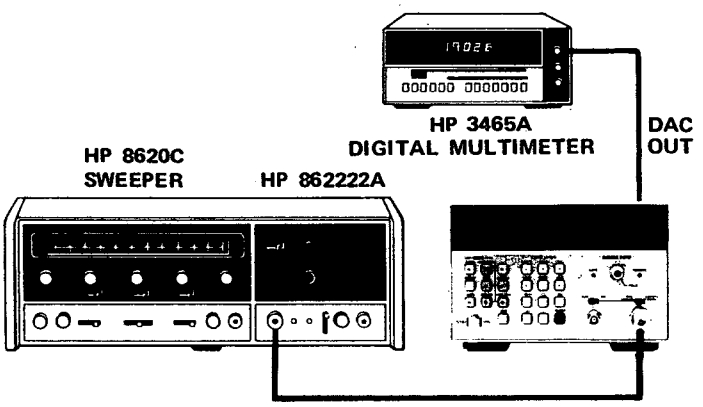

- Set the 5342A to the 500 MHz—18 GHz range, AUTO mode.
- Connect DVM to DAC OUT, set DVM to 20V range.
- Set the generator to 999 MHz as indicated on 5342A display.
- On 5342A keyboard, press:

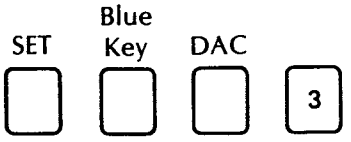

- Observe DVM for indication of 9.99 ±0.01. Enter on performance test record (*Table 4-5*).
- On 5342A keyboard, press:

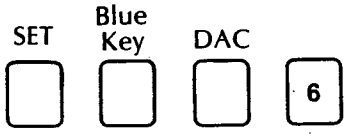

- Observe DVM for Ø ± 0.01. Enter on performance test record (*Table 4-5*).
- On 5342A keyboard, press:

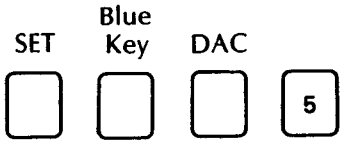

- Observe DVM for 9.00 ±0.01. Enter on performance test record (*Table 4-5*).

Table 4-5. Performance Test Record

5342A S/N _____ Date _____

PARA. NO.	TEST	MIN.	RESULTS ACTUAL	MAX.
4-29 (All except Opt.002)	10 Hz—500 MHz Input Sensitivity (50Ω): 10 Hz 1 kHz 500 kHz 5 MHz 10 MHz 50 MHz 250 MHz 520 MHz		 _____ _____ _____ _____ _____ _____ _____ _____	 25 mV rms ↓
4-30 (All)	10 Hz—500 MHz Input Sensitivity (1 MΩ): 10 Hz 1 kHz 500 kHz 5 MHz 10 MHz 15 MHz 25 MHz		 _____ _____ _____ _____ _____ _____ _____	 50 mV rms (141 mV p-p) ↓
4-31 (All except Opt. 002)	500 MHz—18 GHz Input Sensitivity: 500 MHz 1 GHz 5 GHz 10 GHz 12.4 GHz 15 GHz 17 GHz 18 GHz		 _____ _____ _____ _____ _____ _____ _____	Standard Opt. 003 -25 dBm -22 dBm ↓ ↓ -20 dBm -15 dBm ↓ ↓
4-32 (All)	500 MHz—18 GHz SWR (Return loss) Min. return loss (Max. SWR) over 2—10 GHz Min. return loss over 10—18 GHz	 9.5 dB (9.5 dB AMPL, 3.5 dB FREQ with Opt. 002) 6.0 dB (9.5 dB AMPL, 3.5 dB FREQ with Opt. 002)	 _____ _____ _____ _____	
4-33 (All)	500 MHz—18 GHz Maximum Input: Dashed display (Option 002 only) for +20 dBm reading on 5342A, 436A reads:	 +5 dBm (+20 dBm for Opt. 002, 003) +18.5 dBm	 _____ _____	 +21.5 dBm
4-34 (All)	FM Tolerance: CW Mode FM mode	 20 MHz p-p 50 MHz p-p	 Pass Pass	
4-35 (All)	Automatic Amplitude Discrimination: 17.5 GHz separation 500 MHz separation		 _____ _____	 20 dB 6 dB

Table 4-5. Performance Test Record (Continued)

PARA. NO.	TEST	MIN.	RESULTS ACTUAL	MAX.
4-36 (Option 002 only)	500 MHz—18 GHz Input Minimum Level and Amplitude Accuracy Test:			
	-22 dBm 500 MHz	-23.5 dBm	_____	-20.5 dBm
	1 GHz		_____	
	10 GHz		_____	
	12.4 GHz		_____	
	-15 dBm 15 GHz	-16.5 dBm	_____	-13.5 dBm
	17 GHz		_____	
	18 GHz		_____	
	-12 dBm 500 MHz	-13.5 dBm	_____	-10.5 dBm
	1 GHz		_____	
	10 GHz		_____	
	12.4 GHz		_____	
	-5 dBm 15 GHz	-6.5 dBm	_____	-3.5 dBm
	17 GHz		_____	
	18 GHz		_____	
4-37 (Option 002 only)	10 Hz—500 MHz Input Minimum Level and Amplitude Accuracy Test:			
	-17 dBm 10 MHz	-12.5 dBm	_____	-9.5 dBm
	50 MHz		_____	
	100 MHz		_____	
	300 MHz		_____	
	520 MHz		_____	
	-7 dBm 10 MHz	-2.5 dBm	_____	+.5 dBm
	50 MHz		_____	
	100 MHz		_____	
	300 MHz		_____	
	520 MHz		_____	
4-38 (Option 002 only)	10 Hz—500 MHz Input Maximum Input Test: For +20 dBm reading on 5342A, 436A Power Meter reads:	+18.5 dBm	_____	+21.5 dBm
4-39 (Option 002 only)	10 Hz—500 MHz Input SWR: Min. return loss over 100 MHz—500 MHz range. Amplitude measurement mode.	10.75 dB	_____	
4-40 (Option 004 only)	DAC Output Test	9.98V	_____	10V
			_____	

SECTION V
ADJUSTMENTS

5-1. INTRODUCTION

5-2. This section describes the adjustments required to maintain the 5342A's operating characteristics within specifications. Adjustments should be made when required, such as after a performance test failure or when components are replaced that may affect an adjustment.

5-3. *Table 5-1* is a list of all adjustable components in the 5342A and indicates the order in which adjustments should be performed.

5-4. EQUIPMENT REQUIRED

5-5. The test equipment required for the adjustment procedures is listed in *Table 1-4*, Recommended Test Equipment. Substitute instruments may be used if they meet the critical specifications.

5-6. FACTORY SELECTED COMPONENTS

5-7. Factory selected components are identified by an asterisk (*) in parts lists and schematic diagrams. Refer to paragraph 8-36 for replacement information.

5-8. ADJUSTMENT LOCATIONS

5-9. Adjustment locations are identified in the component locators in the Section VIII schematic diagrams and in the top view of the instrument, *Figure 8-21*.

5-10. SAFETY CONSIDERATIONS

5-11. This section contains warnings that must be followed for your protection and to avoid damage to the equipment.

WARNING

MAINTENANCE DESCRIBED HEREIN IS PERFORMED WITH POWER SUPPLIED TO THE INSTRUMENT, AND PROTECTIVE COVERS REMOVED. SUCH MAINTENANCE SHOULD BE PERFORMED ONLY BY SERVICE-TRAINED PERSONNEL WHO ARE AWARE OF THE HAZARDS INVOLVED (FOR EXAMPLE, FIRE AND ELECTRICAL SHOCK). WHERE MAINTENANCE CAN BE PERFORMED WITHOUT POWER APPLIED, THE POWER SHOULD BE REMOVED.

BEFORE ANY REPAIR IS COMPLETED, ENSURE THAT ALL SAFETY FEATURES ARE INTACT AND FUNCTIONING, AND THAT ALL NECESSARY PARTS ARE CONNECTED TO THEIR PROTECTIVE GROUNDING MEANS.

Table 5-1. Adjustments

NAME	REFERENCE DESIGNATOR	NAME	POWER	ORDER
1. Power Supply Adjustments				Should be done first in following order:
	A21R27	—	Set frequency of switching regulator to 20 kHz.	(1)
	A21R17	—	Sets reference voltage against which +5V (D) is compared.	(2)
	A19R5	—	Sets current level at which shutdown occurs.	(3)
2. Main Synthesizer Adjustment	A8R22	—	Sets free-run frequency of A8 Main VCO.	Can be done anytime
3. Offset Synthesizer Adjustments				Should be done after Main Synthesizer adjustment in following order:
	A4R1	—	Sets free-run frequency of A4 OFFSET VCO.	(1)
	A6R1, A6R2	—	Set center and extremes of triangular search waveform on A6.	(2)
4. IF Adjustments				Can be done anytime in following order:
	A25R28	"BAL"	Maximizes gain through A25U2.	(1)
	A25C11	—	Sets attenuation at 175 MHz	(2)
	A11R1	"AMP"	Maximize gain through A11U2.	(3)
	A12R2	"B1"	Maximize gain through A12U2.	(4)
	A12R12	"B2"	Maximize gain through A12U4.	(5)
	A12R7	"OFS"	Sets level detector so counter counts 1 GHz, –130 dBm.	(6)
	A25R31 (Standard)	"OFST"	Adjust detector to dash 5342A display at overload.	(7)
	A11R14, A25R31 (Option 002)	"DET" "OFST"	Adjust detector to take out attenuation when input level drops. For Option 002 only.	(8)
5. Direct Count Adjustment	A3R8	—	Adjust for maximum sensitivity.	Can be done anytime

Table 5-1. Adjustments (Continued)

NAME	REFERENCE DESIGNATOR	NAME	PURPOSE	ORDER
6. Amplitude Adjustments (Option 002)				Can be done anytime in following order:
	A16R21	—	Adjusts reference voltage to 3.200 volts for ADC on A16.	(1)
	A16R29	—	Adjust loop gain. Set the voltage into the ADC for a specified level of 100 kHz.	(2)
	A16R26	—	Adjust dc offset. Set the voltage into the ADC for a specified level of 100 kHz.	(3)
	A27R9	"CAL"	Adjusts the output of the 100 kHz detector on A27.	(4)
	A27R10	"High Level Cal"	Adjusts the output of the 100 kHz detector on A27 for high levels.	(5)
7. Digital-to-Analog (DAC) Adjustments (Option 004)	A2R25	GAIN	Adjust maximum (9.99V) DAC output.	Can be done anytime
	A2R27	OFFSET	Adjusts minimum (0V) DAC output.	

5-12. ADJUSTMENT PROCEDURES

5-13. Power Supply Adjustments

5-14. Adjust resistor A21R27 (20 kHz frequency) as follows:

a. Place A21 on extender board. Monitor A21TP2 with an oscilloscope.

b. Adjust A21R27 (bottom, right side pot) for a 50 μs $\pm$1 μs period as shown:

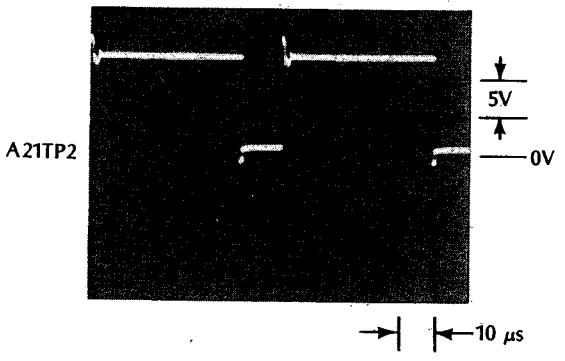

c. Replace A21 in instrument.

5-15. Adjust resistor A21R17, +5V (D) as follows:

With a 3465A Multimeter in the DAC VOLTS FUNCTION and 20V range, measure the dc voltage of the -5.2V supply at XA21(5, $\overline{5}$). Adjust A21R17 for a -5.20 (-0.1, +0.05)V dc.

WARNING

PRIOR TO MAKING ANY VOLTAGE TESTS ON THE A19 PRIMARY POWER ASSEMBLY, THE VOLTMETER TO BE USED OR THE 5342A MUST BE ISOLATED FROM THE POWER MAINS BY USE OF AN ISOLATION TRANSFORMER. A TRANSFORMER SUCH AS AN ALLIED ELECTRONICS, 705-0084 (120V AC) MAY BE USED FOR THIS PURPOSE. CONNECT THE TRANSFORMER BETWEEN THE AC POWER SOURCE AND THE AC POWER INPUT TO THE 5342A.

5-16. Adjust resistor A19R5 (over-current threshold) as follows:

a. Put A19 on extender board.

b. Apply power to 5342A via the isolation transformer.

c. Connect scope probe to A19TPJ and scope probe ground to A19TPG.

d. Adjust A19R5 for -1 volt amplitude on trailing edge of pulse as shown:

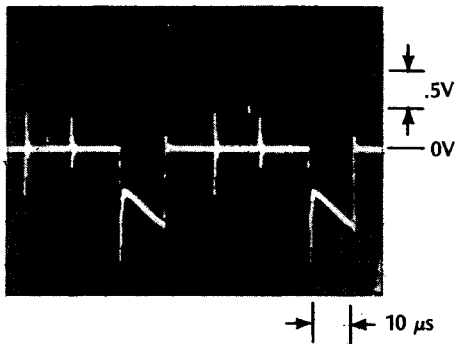

e. Momentarily short +5V TP on A17 to ground. Observe red LED on A21 turn on and green LED on A20 turn off for approximately 2 seconds.

f. Remove isolation transformer and replace A19.

5-17. Main Synthesizer Adjustment

5-18. Adjust resistor A8R22 (Main VCO free-run frequency) as follows:

a. Put 5342A in 10 Hz—500 MHz range, 50Ω. Using cable with BNC on one end, clip leads on the other, connect XA5($\overline{10}$), the Main OSC signal, to the direct count input of the 5342A and measure the main VCO frequency.

b. With a clip lead, ground A9TP1.

c. Adjust A8R22 for a 325 (±2) MHz reading.

d. Remove ground on A9TP1.

5-19. Offset Synthesizer Adjustments

5-20. Offset Synthesizer adjustments are made on assemblies A4 and A6 as follows:

a. Adjust A4R1 (Offset VCO free-run frequency) as follows:

1. Put 5342A in 10 Hz—500 MHz range, 50Ω. Using cable with BNC on one end, clip leads on the other, connect XA4($\overline{10}$), the Offset OSC signal, to the direct count input of the 5342A and measure the Offset VCO frequency.
2. With a clip lead, ground A6TP1.
3. Adjust A4R1 for a 325 (±2) MHz reading.
4. Remove ground on A6TP1.

b. Adjust A6R1, A6R2 (search sweep) as follows:

1. Remove the A7 Assembly from the 5342A.
2. Connect scope probe to A6TP1.
3. Adjust A6R1 and A6R2 to obtain an 8V peak-to-peak (±0.8V) triangular waveform, centered around 0V, as shown. When adjusted properly, the period will be 7.5 (±2) ms.

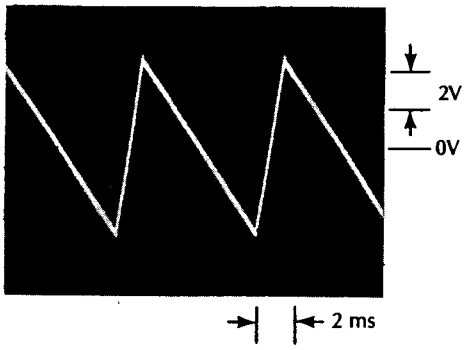

5-21. IF Adjustment

5-22. Adjust resistor A25R28 (Preamp Gain) by connecting the equipment as shown below and perform step a.

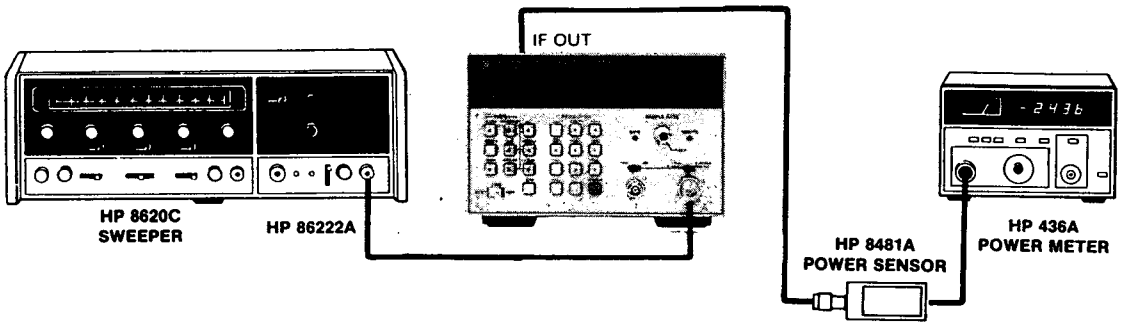

a. Set 8620C to 75 MHz at -15 dBm. While monitoring the rear panel IF OUT power with the 436A Power Meter, adjust A25R28 "BAL" for maximum signal level as read on the 436A.

5-23. Adjust capacitor A25C11 (175 MHz rolloff) by connecting the equipment as shown below and proceed:

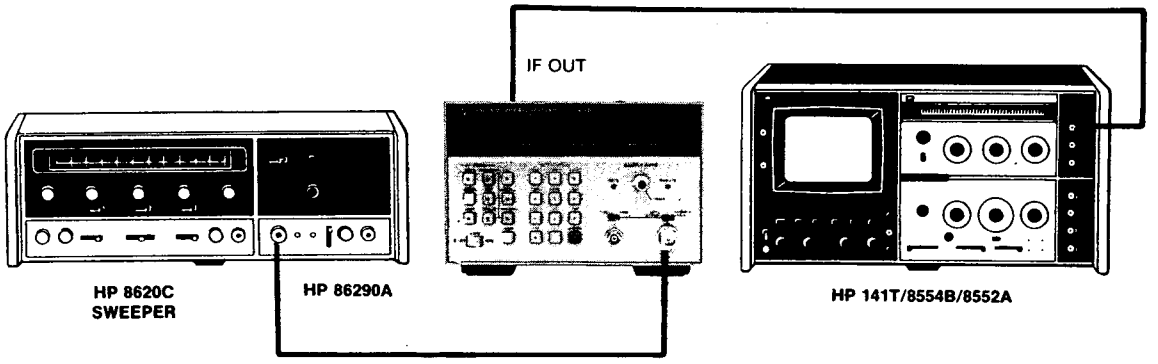

a. Set 5342A in AUTO mode, HOLD, and diagnostic mode 7 (SET, SET 7). Counter should display 350.5 MHz indicating that the MAIN VCO is at 350.5 MHz.

b. Transpose IF OUT INT and IF OUT EXT cables on A25 (cables connected to A25J1 and J2). This causes the IF output of A25 to be routed to the rear panel connector of the 5342A for ease in connecting the signal to the spectrum analyzer.

c. Set the spectrum analyzer for a center frequency of 100 MHz, 20 MHz/div., 300 kHz BW.

d. Adjust the frequency of the 86290A (level ~–15 dBm) for an IF around 10 MHz as seen on the spectrum analyzer. Now change the 86290A frequency such that the IF increases. As the IF approaches 175 MHz, the amplitude will roll off. The amplitude at 175 MHz must be adjusted to be 10 (±1) dB less than the amplitude at 50 MHz (amplitude is essentially flat from below 1 MHz out to 160 MHz).

e. To adjust 86290A so that the IF is precisely 175 MHz, increase the 86290A frequency until the IF produced by the Nth harmonic of the VCO mixing with the input is just equal in amplitude to the IF produced by the (N±1)th harmonic of the VCO mixing with the input. Since the VCO harmonics are spaced by 350 MHz, this only occurs when both IF's are equal to 175 MHz as seen in the following:

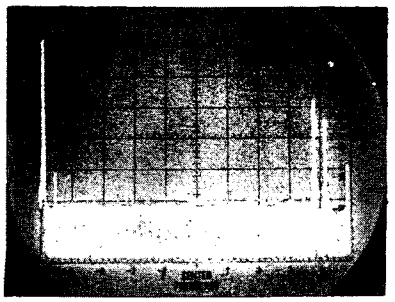

IF OUT
20 MHz/div.
100 MHz center freq.

1st line (closest to reference) is IF produced by Nth harmonic of VCO.

2nd line is IF produced by (N±1)th harmonic of VCO.

These are equal in amplitude at 175 MHz.

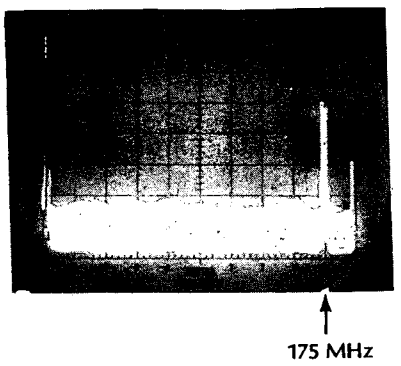

IF OUT
20 MHz/div.
100 MHz center freq.

As 86290A frequency is changed, the two IF's both approach 175 MHz and become equal in amplitude.

Note this point on spectrum analyzer. The response at this point must be 10 (±1) dBm down.

NOTE

In the following step, needle-nose pliers can be used to adjust A25C11 in the casting in those cases where C11 is oriented the wrong way for using a tuning wand.

f. Sweep the 86290A over a narrow range so that the IF covers approximately 10 MHz to 200 MHz. Adjust A25C11 so that the response at 175 MHz is 10 (±1) dB down from flat part of response as shown:

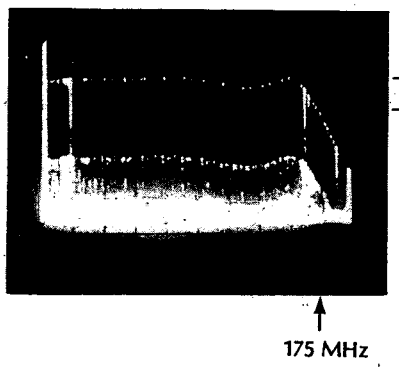

IF OUT
20 MHz/div.
100 MHz center freq.

g. Return IF OUT INT and IF OUT EXT cables to original position.

5-24. Adjust resistor A11R1 ("Amp" Gain) as follows:

a. Apply 75 MHz at -20 dBm to 500 MHz—18 GHz input of 5342A.

b. Monitor the IF LIM signal at XA11($\overline{12}$) with an RF voltmeter such as the 3406A. Adjust A11R1 for maximum output signal.

5-25. Adjust resistors A12R2, A12R12 (Gain) as follows:

a. Connect a 75 MHz, -50 dBm signal to the 500 MHz—18 GHz input to the 5342A.

b. Monitor the IF COUNT signal at XA12($\overline{8}$) with an RF voltmeter such as the 3406A and adjust A12R2, "B1", and A12R12, "B2", for maximum observed output as indicated by the voltmeter.

5-26. Adjust resistor A12R7 (Sensitivity) as follows:

a. Set 5342A to AUTO. Adjust A12R7 maximum ccw.

b. Apply a 1 GHz, -30 dBm signal to the 500 MHz—18 GHz input of the 5342A.

c. Set 5342A to MANUAL.

d. Measure the dc voltage at A12TP1 and record _____ .

e. Disconnect the 1 GHz signal from the 5342A input.

f. Measure the dc voltage at A12TP2 and adjust A12R7, "OFS", for same voltage as recorded in step b, within ±5 mV.

g. Set 5342A to AUTO.

h. Remove test leads and verify that counter counts 1 GHz at -30 dBm.

5-27. Adjust resistor A25R31 (overload indication) as follows (Standard 5342A only):

a. Apply a 1 GHz signal at +6.0 dBm to the 5342A 500 MHz—18 GHz connector.

b. Turn A25R31 full clockwise (counter should display 1 GHz).

c. Slowly turn A25R31 "OFST", counterclockwise until the display of the counter fills with dashes.

d. Verify that counter counts 1 GHz, +5 dBm signal.

5-28. Direct Count Adjustment

5-29. Adjust resistor A3R8 (Balance) as follows:

a. Set 5342A to 10 Hz—500 MHz range and 50Ω.

b. Apply a 1 MHz sine wave signal at a level of 25 mV rms.

c. Monitor A3TP1 (output of U5) on scope and adjust A3R8 for a 50% duty cycle.

d. Decrease input level further and adjust A3R8 for 50% duty cycle. Keep decreasing level and adjusting A3R8 to the point where the counter no longer counts.

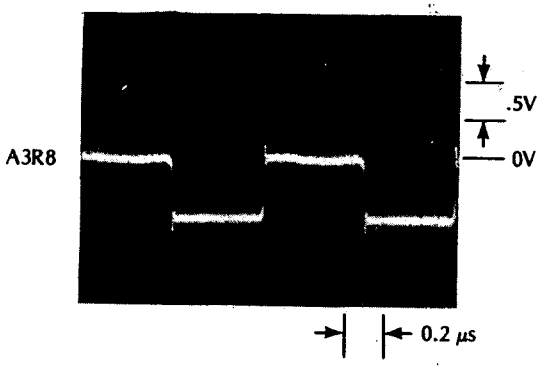

5-30. OSCILLATOR ADJUSTMENTS

5-31. A24 Standard Oscillator. Adjust the standard oscillator as follows:

a. Connect the rear panel FREQ STD OUT of the 5342A to the input of a high resolution frequency counter (reciprocal taking) such as an HP 5345A. The 5345A should be referenced to an external frequency standard such as the HP 5061A Cesium Beam by connecting the external standard to the external oscillator input of the 5345A.

b. Remove the A24 oscillator and note the frequency offset marked on the label. If operation of the counter will be over the full temperature range, then the 10 MHz oscillator must be offset by the marked amount in order to keep the oscillator frequency within the manufacturer's temperature specification. For example, if +3.6 Hz is marked on the label, then the oscillator is adjusted for a frequency of 10.0000036 MHz at 25°C. If operation is solely at 25°C, then the offset can be ignored.

c. Reinstall A24 and adjust the oscillator for a 5345A display of the frequency determined in step b.

5-32. Option 001 Oven Oscillator (10544A). Adjust the optional oscillator as follows:

NOTE

Allow 24-hour warmup for oven before this adjustment.

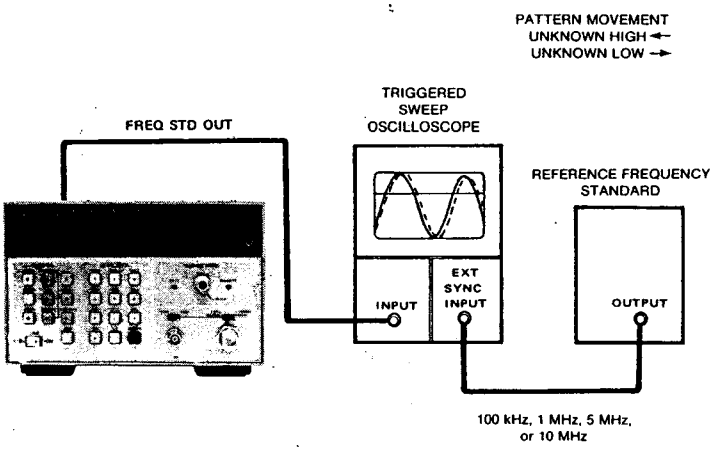

a. Connect reference frequency standard to the external sync input of the oscilloscope.

b. Connect rear panel FREQ STD OUT of the 5342A to Channel A of the scope.

c. Adjust oscillator frequency for minimum sideways movement of the 10 MHz displayed signal.

d. By timing the sideways movement (in CM per second), the approximate offset can be determined based on the oscilloscope sweep speed as shown in the following:

MOVEMENT	SWEEP SPEED			NOTES
	1 μs/cm	0.1 μs/cm	0.01 μs/cm	
1 cm/s	1×10^{-6}	1×10^{-7}	1×10^{-8}	TIME SCOPE TRACE MOVEMENT WITH SECOND HAND OF WATCH OR CLOCK
1 cm/10 s	1×10^{-7}	1×10^{-8}	1×10^{-9}	
1 cm/100 s	1×10^{-8}	1×10^{-9}	1×10^{-10}	

For example, if the trace moves 1 centimetre in 10 seconds and the sweep speed is 0.01 μs/cm, the oscillator signal is within 1×10^{-9} of the reference frequency.

5-33. OPTION 002 AMPLITUDE MEASUREMENT ADJUSTMENTS

5-34. A16 Adjustments

5-35. Adjust resistor R21 (A-to-D converter reference voltage) as follows:

a. Place 5342A in AMPL mode and diagnostic mode 6 (see *Table 8-8*).

b. Connect a DVM (HP 3465A) from test point labeled 3.2V (connects to pin 8 of A16U8) to the common pin on the board.

c. Adjust A16R21 (leftmost potentiometer on A16) for a DVM reading of +3.200 (±0.0005)V.

5-36. Adjust resistor R29 (Loop Gain) as follows:

a. Set up equipment as in following diagram:

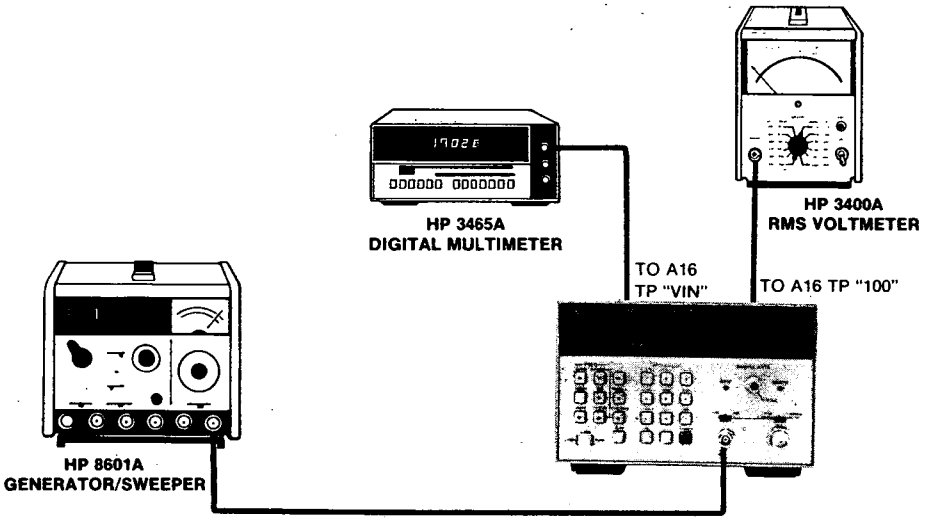

b. Set the 5342A to 50Ω, 10 Hz—500 MHz range, AMPL mode, and diagnostic mode 6.

c. Set the 8601A to 100 MHz at approximately +20 dBm.

d. With the 3400A measuring the ac voltage from the 100 kHz test point (output of A16U15) to the common pin on the board, adjust the 8601A output level for an ac voltmeter reading of 2.24 (±0.005)V rms.

e. With the 3465A measuring the dc voltage from the VIN test point (A16U8(5)) to the common pin on the board, adjust A16R29 (the rightmost potentiometer on A16) for a dc level of 5.02 (±0.01)V dc.

5-37. Adjust resistor R26 (dc Offset) as follows:

a. With the same set-up as above, set the 8601A for an output level of approximately -28 dBm at 100 MHz.

b. Adjust the 8601A output level for an ac voltage reading at the 100 kHz test point of 8.9 (±0.1) mV rms.

c. Adjust R26 for a dc voltage reading at the VIN test point of 0.320 (±0.001)V dc.

5-38. A27 Adjustments (Resistors A27R9, A27R10)

a. Set up the equipment as in the following diagram:

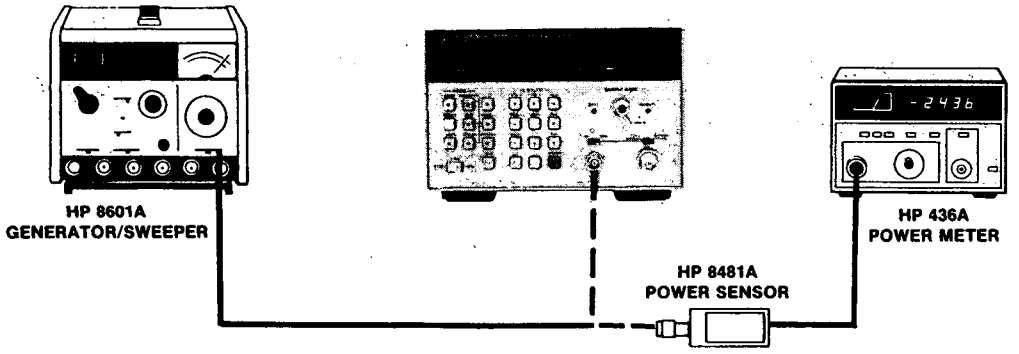

b. Set the 8601A to 10 MHz and, with the output connected to the 8481A, adjust the 8601A output level for a reading on the 436A of -10.00 (±0.02) dBm.

c. On the 5342A, press AUTO, SET, SET 6 (for diagnostic mode 6), AMPL. Select 1 MHz resolution. Select 50Ω position and 10 Hz—500 MHz range.

d. Connect the 8601A output to the 10 Hz—500 MHz input of the 5342A.

e. Adjust A27R9 "CAL" (potentiometer toward front of instrument) so 5342A reads -10.00 (±0) dBm.

f. Reconnect 8601A output to 8481A Power Sensor and adjust 8601A output for +20.00 (±0.02) dBm reading on the 436A. Connect 8601A to 5342A.

g. Adjust A27R10 "High Level Cal" (potentiometer toward rear of instrument) for a 5342A reading of +20.0 (±0) dBm.

h. Go back to step b and check the 5342A reading so that both levels read correctly. The "CAL" R9 adjustment affects both levels equally whereas the R10 "High Level Cal" affects low levels only slightly.

5-39. OPTION 002/003 ADJUSTMENTS

5-40. A11, A25 Adjustments (Resistors A11R14, A25R31)

a. Set the equipment as in the following diagram:

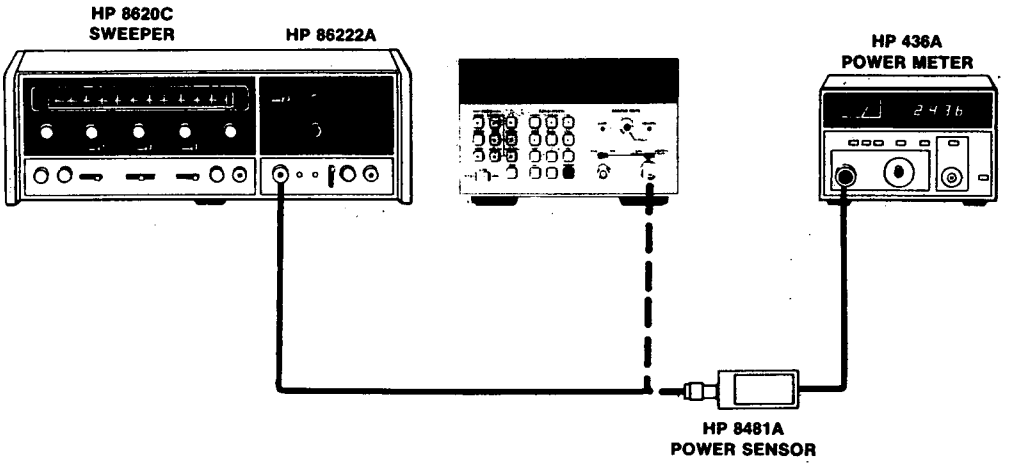

b. Set signal source to 1000 (±5) MHz at a level of +8 (±0.5) dBm as measured on 436A Power Meter.

c. Rotate A11R14, "DET", fully ccw and A25R31, "OFFSET", fully cw.

d. Set the 5342A to the 500 MHz—18 GHz range and AMPL mode.

e. Connect a scope probe (or dc voltmeter) to the "ATT" test point on A16.

f. Connect signal source to the 5342A RF input. Observe that the "ATT" test point goes to approximately 6.5 (±1.5)V dc. If not, switch RF signal off and back on.

g. Adjust A25R31 slowly ccw just until "ATT" test point drops to approximately 1 (±1)V dc.

h. Rotate A11R14 fully cw.

i. Adjust signal source amplitude to -2 (±0.5) dBm and reconnect to 5342A RF input. "ATT" test point on A16 should remain at approximately 1 (±1)V dc.

j. Adjust A11R14 slowly ccw just until "ATT" test point on A16 jumps to approximately 6.5 (±1.5)V dc.

k. If necessary, repeat adjustment procedures.

5-41. OPTION 004 DIGITAL-TO-ANALOG (DAC) ADJUSTMENTS

5-42. Set up the equipment as shown below, and proceed:

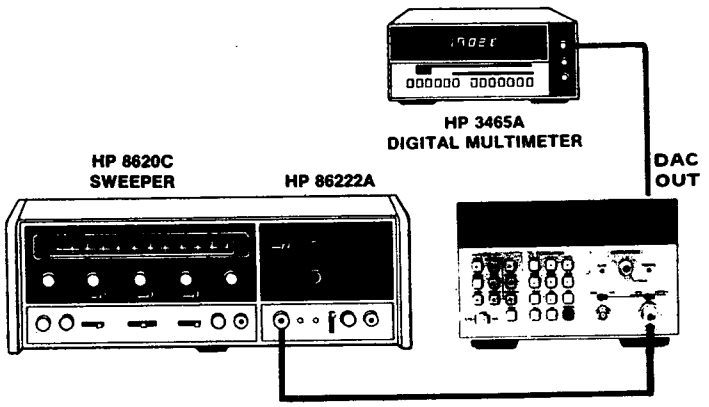

a. Set the 5342A to the 500 MHz—18 GHz range, AUTO mode.

b. Connect DVM to DAC OUT, set DVM to 20V range.

c. Set the generator to 999 MHz as indicated on 5342A display.

d. On 5342A keyboard, press:

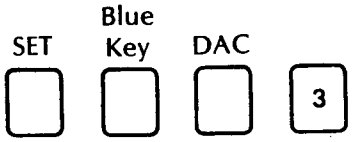

NOTE

The DAC variable resistor adjustments "OFFSET" (R27) and "GAIN ADJ" (R25) are located at the top rear of the A2 Display Driver Assembly. Remove the top cover of the 5342A to gain access to these adjustments located below the top of the front frame.

e. Adjust "GAIN ADJ" and observe DVM for indication of 9.99 volts, dc.

f. On 5342A keyboard, press:

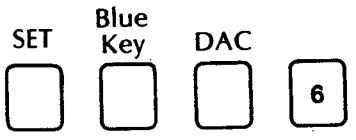

g. Adjust "OFFSET" and observe DVM for Ø volts, dc.

h. Repeat steps d and f and observe DVM for proper indication. Readjust, if necessary.

SECTION VI
REPLACEABLE PARTS

6-1. INTRODUCTION

6-2. This section contains information for ordering parts. *Table 6-1* is a list of exchange assemblies, and *Table 6-2* lists abbreviations and reference designations used in the parts list and throughout the manual. *Table 6-3* lists all replaceable parts for the standard 5342A in reference designator order. *Tables 6-4, 6-5, 6-6, 6-7,* and *6-8* list replaceable parts for Options 001, 002, 003, 004, and 011, respectively. *Table 6-9* contains the names and addresses that correspond to the manufacturer's code numbers.

6-3. EXCHANGE ASSEMBLIES

6-4. *Table 6-1* lists assemblies within the instrument that may be replaced on an exchange basis. Exchange factory repaired and tested assemblies are available only on a trade-in basis; therefore, the defective assemblies must be returned for credit. For this reason, assemblies required for spare parts stock must be ordered by the new assembly part number.

Table 6-1. Exchange Assemblies

NAME	NEW HP PART NO.	EXCHANGE HP PART NO.
U1 Sampler	5088-7022	5088-7522
Option 001 Oven Oscillator	10544-60011	10544-60511
Option 002 U2 Multiplexer/ A16U3 PROM — Matched	05342-80005 (consists of matched 5088-7035 and A16U3 PROM)	05342-80505 (consists of matched 5088-7535 and A16U3 PROM)
Option 002 U2 Multiplexer (must be ordered as matched part 05342-80505)	5088-7035	5088-7535
Option 003 U2 Attenuator	5088-7038	5088-7538

6-5. ABBREVIATIONS AND REFERENCE DESIGNATIONS

6-6. *Table 6-2* lists abbreviations and reference designations used in the parts list, the schematics and throughout the manual. In some cases, two forms of the abbreviation are used, one all in capital letters, and one partial or no capitals. This occurs because the abbreviations in the parts list are always all capitals. However, in the schematics and other parts of the manual, other abbreviation forms are used with both lower case and upper case letters.

Table 6-2. Abbreviations and Reference Designations

REFERENCE DESIGNATIONS

A	= assembly	E	= micellaneous electrical part	P	= electrical connector (movable portion); plug	V	= electron tube
AT	= attenuator; isolator; termination	F	= fuse			VR	= voltage regulator; breakdown diode
B	= fan; motor	FL	= filter	Q	= transistor; SCR; triode thyristor	W	= cable; transmission path; wire
BT	= battery	H	= hardware			X	= socket
C	= capacitor	HY	= circulator	R	= resistor	Y	= crystal unit-piezo-electric
CP	= coupler	J	= electrical connector (stationary portion); jack	RT	= thermistor		
CR	= diode; diode thyristor; varactor			S	= switch	Z	= tuned cavity; tuned circuit
				T	= transformer		
DC	= directional coupler	K	= relay	TB	= terminal board		
DL	= delay line	L	= coil; inductor	TC	= thermocouple		
DS	= annunciator; signaling device (audible or visual); lamp; LED	M	= meter	TP	= test point		
		MP	= miscellaneous mechanical part	U	= integrated circuit; microcircuit		

ABBREVIATIONS

A	= ampere	BAL	= balance	COEF	= coefficient	°C	= degree Celsius (centrigrade)
ac	= alternating current	BCD	= binary coded decimal	COM	= common		
ACCESS	= accessory	BD	= board	COMP	= composition	°F	= degree Fahrenheit
ADJ	= adjustment	BE CU	= beryllium copper	COMPL	= complete	°K	= degree Kelvin
A/D	= analog-to-digital	BFO	= beat frequency oscillator	CONN	= connector	DEPC	= deposited carbon
AF	= audio frequency			CP	= cadmium plate	DET	= detector
AFC	= automatic frequency control	BH	= binder head	CRT	= cathode-ray tube	diam	= diameter
		BKDN	= breakdown	CTL	= complementary transistor logic	DIA	= diameter (used in parts list)
AGC	= automatic gain control	BP	= bandpass				
AL	= aluminum	BPF	= bandpass filter	CW	= continuous wave	DIFF AMPL	= differential amplifier
ALC	= automatic level control	BRS	= brass	cw	= clockwise	div	= division
AM	= amplitude modulation	BWO	= backward-wave oscillator	D/A	= digital-to-analog	DPDT	= double-pole, double-throw
AMPL	= amplifier			dB	= decibel		
APC	= automatic phase control	CAL	= calibrate	dBm	= decibel referred to 1 mW	DR	= drive
		ccw	= counterclockwise			DSB	= double sideband
ASSY	= assembly	CER	= ceramic	dc	= direct current	DTL	= diode transistor logic
AUX	= auxiliary	CHAN	= channel	deg	= degree (temperature interval or difference)	DVM	= digital voltmeter
avg	= average	cm	= centimeter			ECL	= emitter coupled logic
AWG	= american wire gauge	CMO	= coaxial	...°	= degree (plane angle)		

Table 6-2. Abbreviations and Reference Designations (Continued)

ABBREVIATIONS (CONTINUED)

EMF	= electromotive force
EDP	= electronic data processing
ELECT	= electrolytic
ENCAP	= encapsulated
EXT	= external
F	= farad
FET	= field-effect transistor
F/F	= flip-flop
FH	= flat head
FOL H	= fillister head
FM	= frequency modulation
FP	= front panel
FREQ	= frequency
FXD	= fixed
g	= gram
GE	= germanium
GHz	= gigahertz
GL	= glass
GND	= ground(ed)
H	= henry
h	= hour
HET	= heterodyne
HEX	= hexagonal
HD	= head
HDW	= hardware
HF	= high frequency
HG	= mercury
HI	= high
HP	= Hewlett-Packard
HPF	= high pass filter
HR	= hour (used in parts list)
HV	= high voltage
Hz	= Hertz
IC	= integrated circuit
ID	= inside diameter
IF	= intermediate frequency
IMPG	= impregnated
in	= inch
INCD	= incandescent
INCL	= include(s)
INP	= input
INS	= insulation
INT	= internal
kg	= kilogram
kHz	= kilohertz
kΩ	= kilohm
kV	= kilovolt
lb	= pound
LC	= inductance-capacitance
LED	= light-emitting diode
LF	= low frequency
LG	= long
LH	= left hand
LIM	= limit
LIN	= linear taper (used in parts list)
lin	= linear
LK WASH	= lockwasher
LO	= low; local oscillator
LOG	= logarithmic taper (used in parts list)
log	= logarithm(ic)
LPF	= low pass filter
LV	= low voltage
m	= meter (distance)
mA	= milliampere
MAX	= maximum
MΩ	= megohm
MEG	= meg (10^6) (used in parts list)
MET FLM	= metal film
MET OX	= metal oxide
MF	= medium frequency; microfared (used in parts list)
MFR	= manufacturer
mg	= milligram
MHz	= megahertz
mH	= millihenry
mho	= mho
MIN	= minimum
min	= minute (time)
'	= minute (plane angle)
MINAT	= miniature
mm	= millimeter
MOD	= modulator
MOM	= momentary
MOS	= metal-oxide semiconductor
ms	= millisecond
MTG	= mounting
MTR	= meter (indicating device)
mV	= millivolt
mVac	= millivolt, ac
mVdc	= millivolt, dc
mVpk	= millivolt, peak
mVp-p	= millivolt, peak-to-peak
mVrms	= millivolt, rms
mW	= milliwatt
MUX	= multiplex
MY	= mylar
μA	= microampere
μF	= microfarad
μH	= microhenry
μmho	= micromho
μs	= microsecond
μV	= microvolt
μVac	= microvolt, ac
μVdc	= microvolt, dc
μVpk	= microvolt, peak
μVp-p	= microvolt, peak-to-peak
μVrms	= microvolt, rms
μW	= microwatt
nA	= nanoampere
NC	= no connection
N/C	= normally closed
NE	= neon
NEG	= negative
nF	= nanofarad
NI PL	= nickel plate
N/O	= normally open
NOM	= nominal
NORM	= normal
NPN	= negative-positive-negative
NPO	= negative-positive zero (zero temperature coefficient)
NRFR	= not recommended for field replacement
NSR	= not separately replaceable
ns	= nanosecond
nW	= nanowatt
OBD	= order by description
OD	= outside diameter
OH	= oval head
OP AMPL	= operational amplifier
OPT	= option
OSC	= oscillator
OX	= oxide
oz	= ounce
Ω	= ohm
P	= peak (used in parts list)
PAM	= pulse-amplitude modulation
PC	= printed circuit
PCM	= pulse-code moudulation; pulse-count modulation
PDM	= pulse-duration modulation
pF	= picofarad
PH BRZ	= phosphor bronze
PHL	= Phillips
PIN	= positive-intrinsic-negative
PIV	= peak inverse voltage
pk	= peak
PL	= phase lock
PLO	= phase lock oscillator
PM	= phase modulation
PNP	= positive-negative-positive
P/O	= part of
POLY	= polystyrene
PORC	= porcelain
POS	= positive; position(s) (used in parts list)
POSN	= position
POT	= potentiometer
p-p	= peak-to-peak
PP	= peak-to-peak (used in parts list)
PPM	= pulse-position modulation
PREAMPL	= preamplifier
PRF	= pulse-repetition frequency
PRR	= pulse repetition rate
ps	= picosecond
PT	= point
PTM	= pulse-time modulation
PWM	= pulse-width modulation
PWV	= peak working voltage
RC	= resistance capacitance
RECT	= rectifier
REF	= reference
REG	= regulated
REPL	= replaceable
RF	= radio frequency
RFI	= radio frequency interference
RH	= round head; right hand
RLC	= resistance-inductance-capacitance
RMO	= rack mount only
rms	= root-mean-square
RND	= round
ROM	= read-only memory
R&P	= rack and panel
RWV	= reverse working voltage
S	= scattering parameter
s	= second (time)
"	= second (plane angle)
S-B	= slow-blow (fuse (used in parts list)
SCR	= silicon controlled rectifier; screw
SE	= selenium
SECT	= sections
SEMICON	= semiconductor
SHF	= superhigh frequency
SI	= silicon
SIL	= silver
SL	= slide
SNR	= signal-to-noise ratio
SPDT	= single-pole, double-throw
SPG	= spring
SR	= split ring
SPST	= single-pole, single-throw
SSB	= single sideband
SST	= stainless steel
STL	= steel
SQ	= square
SWR	= standing-wave ratio
SYNC	= synchronize
T	= timed (slow-blow fuse)
TA	= tantalum
TC	= temperature compensating
TD	= time delay
TERM	= terminal
TFT	= thin-film transistor
TGL	= toggle
THD	= thread
THRU	= through
TI	= titanium
TOL	= tolerance
TRIM	= trimmer
TSTR	= transistor
TTL	= transistor-transistor logic
TV	= television
TVI	= television interference
TWT	= traveling wave tube
U	= micro (10^{-6}) (used in parts list)
UF	= microfarad (used in parts list)
UHF	= ultrahigh frequency
UNREG	= unregulated
V	= volt
VA	= voltampere
Vac	= volts ac
VAR	= variable
VCO	= voltage-controlled oscillator
Vdc	= volts dc
VDCW	= volts dc, working (used in parts list)
V(F)	= volts, filtered
VFO	= variable-frequency oscillator
VHF	= very-high frequency
Vpk	= volts peak
Vp-p	= Volts peak-to-peak
Vrms	= volts rms
VSWR	= voltage standing wave ratio
VTO	= voltage-tuned oscillator
VTVM	= vacuum-tube voltmeter
V(X)	= volts, switched
W	= watt
W/	= with
WIV	= working inverse voltage
WW	= wirewound
W/O	= without
YIG	= yttrium-iron-garnet
Zo	= characteristic impedance

NOTE

All abbreviations in the parts list will be in upper case.

MULTIPLIERS

Abbreviation	Prefix	Multiple
T	tera	10^{12}
G	giga	10^{9}
M	mega	10^{6}
k	kilo	10^{3}
da	deka	10
d	deci	10^{-1}
c	centi	10^{-2}
m	milli	10^{-3}
μ	micro	10^{-6}
n	nano	10^{-9}
p	pico	10^{-12}
f	femto	10^{-15}
a	atto	10^{-18}

6-7. REPLACEABLE PARTS LIST

6-8. *Tables 6-3* through *6-8* are the lists of replaceable parts and are organized as follows:

a. Electrical assemblies and their components in alphanumerical order by reference designation.

b. Chassis-mounted parts in alphanumerical order by reference designation (*Table 6-3* only).

c. Miscellaneous parts.

6-9. The information given for each part consists of the following:

a. The Hewlett-Packard part number.

b. Part number check digit (CD).

c. The total quantity (Qty) in each assembly.

d. The description of the part.

e. A typical manufacturer of the part in a five-digit code.

f. The manufacturer's number for the part.

6-10. The total quantity for each assembly is given only once — at the first appearance of the part number in the list for that assembly (A1, A2, etc.).

6-11. ORDERING INFORMATION

6-12. To order a part listed in the replaceable parts table, quote the Hewlett-Packard part number, the check digit, indicate the quantity required, and address the order to the nearest Hewlett-Packard office. The check digit will ensure accurate and timely processing of your order.

6-13. To order a part that is not listed in the replaceable parts table, include the instrument model number, instrument serial number, the description and function of the part, and the number of parts required. Address the order to the nearest Hewlett-Packard Office.

6-14. DIRECT MAIL ORDER SYSTEM

6-15. Within the USA, Hewlett-Packard can supply parts through a direct mail order system. Advantages of using the system are as follows:

a. Direct ordering and shipment from the HP Parts Center in Mountain View, California.

b. No maximum or minimum on any mail order (there is a minimum order amount for parts ordered through a local HP office when the orders require billing and invoicing).

c. Prepaid transportation (there is a small handling charge for each order).

d. No invoices — to provide these advantages, a check or money order must accompany each order.

6-16. Mail order forms and specific ordering information is available through your HP office. Addresses and phone numbers are located at the back of this manual.

6-17. OPTION RETROFIT KITS

6-18. To order a retrofit kit for field installation of Options 001, 002, 003, 004, or 011 refer to paragraph 2-25 for the part number of the option kit.

Table 6-3. Replaceble Parts

Reference Designation	HP Part Number	C D	Qty	Description	Mfr Code	Mfr Part Number
A1	05342-60001	6	1	DISPLAY ASSEMBLY (SERIES 1720)	28480	05342-60001
A1C1	0160-4256	6	1	CAPACITOR-FXD .047UF +-20% 200VDC CER	16546	CW30 B 473M
A1C2	0160-3879	7	1	CAPACITOR-FXD .01UF +-20% 100VDC CER	28480	0160-3879
A1DS1	1990-0487	7	8	LED-VISIBLE LUM-INT=1MCD IF=20MA-MAX	28480	5082-4584
A1DS2	1990-0487	7		LED-VISIBLE LUM-INT=1MCD IF=20MA-MAX	28480	5082-4584
A1DS3	1990-0487	7		LED-VISIBLE LUM-INT=1MCD IF=20MA-MAX	28480	5082-4584
A1DS4	1990-0487	7		LED-VISIBLE LUM-INT=1MCD IF=20MA-MAX	28480	5082-4584
A1DS5	1990-0487	7		LED-VISIBLE LUM-INT=1MCD IF=20MA-MAX	28480	5082-4584
A1DS6	1990-0487	7		LED-VISIBLE LUM-INT=1MCD IF=20MA-MAX	28480	5082-4584
A1DS7	1990-0487	7		LED-VISIBLE LUM-INT=1MCD IF=20MA-MAX	28480	5082-4584
A1DS8	1990-0487	7		LED-VISIBLE LUM-INT=1MCD IF=20MA-MAX	28480	5082-4584
A1DS10	1990-0517	4	6	LED-VISIBLE LUM-INT=3MCD IF=20MA-MAX	28480	5082-4655
A1DS11	1990-0540	3	11	DISPLAY-NUM=SEG 1=CHAR .43=H	28480	5082-7650
A1DS12	1990-0540	3		DISPLAY-NUM=SEG 1=CHAR .43=H	28480	5082-7650
A1DS13	1990-0540	3		DISPLAY-NUM=SEG 1=CHAR .43=H	28480	5082-7650
A1DS14	1990-0540	3		DISPLAY-NUM=SEG 1=CHAR .43=H	28480	5082-7650
A1DS15	1990-0540	3		DISPLAY-NUM=SEG 1=CHAR .43=H	28480	5082-7650
A1DS16	1990-0540	3		DISPLAY-NUM=SEG 1=CHAR .43=H	28480	5082-7650
A1DS17	1990-0540	3		DISPLAY-NUM=SEG 1=CHAR .43=H	28480	5082-7650
A1DS18	1990-0540	3		DISPLAY-NUM=SEG 1=CHAR .43=H	28480	5082-7650
A1DS19	1990-0540	3		DISPLAY-NUM=SEG 1=CHAR .43=H	28480	5082-7650
A1DS20	1990-0540	3		DISPLAY-NUM=SEG 1=CHAR .43=H	28480	5082-7650
A1DS21	1990-0540	3		DISPLAY-NUM=SEG 1=CHAR .43=H	28480	5082-7650
A1DS22	1990-0517	4		LED-VISIBLE LUM-INT=3MCD IF=20MA-MAX	28480	5082-4655
A1DS23	1990-0517	4		LED-VISIBLE LUM-INT=3MCD IF=20MA-MAX	28480	5082-4655
A1DS24	1990-0517	4		LED-VISIBLE LUM-INT=3MCD IF=20MA-MAX	28480	5082-4655
A1DS25	1990-0517	4		LED-VISIBLE LUM-INT=3MCD IF=20MA-MAX	28480	5082-4655
A1DS26	1990-0517	4		LED-VISIBLE LUM-INT=3MCD IF=20MA-MAX	28480	5082-4655
A1J1	1250-0257	1	2	CONNECTOR-RF SMB M PC 50-OHM	28480	1250-0257
A1J2	1250-0257	1		CONNECTOR-RF SMB M PC 50-OHM	28480	1250-0257
A1J3	1250-1163	0	1	CONNECTOR-RF BNC FEM PC 50-OHM	28480	1250-1163
A1Q1	1853-0318	3	13	TRANSISTOR PNP SI PD=500MW FT=60MHZ	04713	MP86562
A1Q2	1853-0318	3		TRANSISTOR PNP SI PD=500MW FT=60MHZ	04713	MP86562
A1Q3	1853-0318	3		TRANSISTOR PNP SI PD=500MW FT=60MHZ	04713	MP86562
A1Q4	1853-0318	3		TRANSISTOR PNP SI PD=500MW FT=60MHZ	04713	MP86562
A1Q5	1853-0318	3		TRANSISTOR PNP SI PD=500MW FT=60MHZ	04713	MP86562
A1Q6	1853-0318	3		TRANSISTOR PNP SI PD=500MW FT=60MHZ	04713	MP86562
A1Q7	1853-0318	3		TRANSISTOR PNP SI PD=500MW FT=60MHZ	04713	MP86562
A1Q8	1853-0318	3		TRANSISTOR PNP SI PD=500MW FT=60MHZ	04713	MP86562
A1Q9	1853-0318	3		TRANSISTOR PNP SI PD=500MW FT=60MHZ	04713	MP86562
A1Q10	1853-0318	3		TRANSISTOR PNP SI PD=500MW FT=60MHZ	04713	MP86562
A1Q11	1853-0318	3		TRANSISTOR PNP SI PD=500MW FT=60MHZ	04713	MP86562
A1Q12	1853-0318	3		TRANSISTOR PNP SI PD=500MW FT=60MHZ	04713	MP86562
A1Q13	1853-0318	3		TRANSISTOR PNP SI PD=500MW FT=60MHZ	04713	MP86562
A1R1	0698-5075	8	13	RESISTOR 130 5% .125W CC TC=-330/+800	01121	BB1315
A1R2	0698-5075	8		RESISTOR 130 5% .125W CC TC=-330/+800	01121	BB1315
A1R3	0698-5075	8		RESISTOR 130 5% .125W CC TC=-330/+800	01121	BB1315
A1R4	1810-0080	6	2	NETWORK-RES 8-PIN-SIP .125-PIN-SPCG	28480	1810-0080
A1R5	0698-5075	8		RESISTOR 130 5% .125W CC TC=-330/+800	01121	BB1315
A1R6	0698-5075	8		RESISTOR 130 5% .125W CC TC=-330/+800	01121	BB1315
A1R7	0698-5075	8		RESISTOR 130 5% .125W CC TC=-330/+800	01121	BB1315
A1R8	0698-5075	8		RESISTOR 130 5% .125W CC TC=-330/+800	01121	BB1315
A1R9	0698-5075	8		RESISTOR 130 5% .125W CC TC=-330/+800	01121	BB1315
A1R10	0698-5075	8		RESISTOR 130 5% .125W CC TC=-330/+800	01121	BB1315
A1R11	0698-5075	8		RESISTOR 130 5% .125W CC TC=-330/+800	01121	BB1315
A1R12	1810-0080	6		NETWORK-RES 8-PIN-SIP .125-PIN-SPCG	28480	1810-0080
A1R13	0698-8354	2	1	RESISTOR 270 5% .125W CC TC=-330/+800	01121	BB2715
A1R14	0698-3381	5	1	RESISTOR 150 5% .125W CC TC=-330/+800	01121	BB1515
A1R15	0698-5075	8		RESISTOR 130 5% .125W CC TC=-330/+800	01121	BB1315
A1R16	0698-5075	8		RESISTOR 130 5% .125W CC TC=-330/+800	01121	BB1315
A1R17	0698-5075	8		RESISTOR 130 5% .125W CC TC=-330/+800	01121	BB1315
A1R18	0675-1021	8	1	RESISTOR 1K 10% .125W CC TC=-330/+800	01121	BB1021
A1S1	5060-9436	7	22	SWITCH, PUSHBUTTON	28480	5060-9436
A1S2	5060-9436	7		SWITCH, PUSHBUTTON	28480	5060-9436
A1S3	5060-9436	7		SWITCH, PUSHBUTTON	28480	5060-9436
A1S4	5060-9436	7		SWITCH, PUSHBUTTON	28480	5060-9436
A1S5	5060-9436	7		SWITCH, PUSHBUTTON	28480	5060-9436
A1S6	5060-9436	7		SWITCH, PUSHBUTTON	28480	5060-9436
A1S7	5060-9436	7		SWITCH, PUSHBUTTON	28480	5060-9436
A1S8	5060-9436	7		SWITCH, PUSHBUTTON	28480	5060-9436
A1S9	5060-9436	7		SWITCH, PUSHBUTTON	28480	5060-9436
A1S10	5060-9436	7		SWITCH, PUSHBUTTON	28480	5060-9436

See introduction to this section for ordering information
*Indicates factory selected value

Table 6-3. Replaceable Parts (Continued)

Reference Designation	HP Part Number	C D	Qty	Description	Mfr Code	Mfr Part Number
A1S11	5060-9436	7		SWITCH, PUSHBUTTON	28480	5060-9436
A1S12	5060-9436	7		SWITCH, PUSHBUTTON	28480	5060-9436
A1S13	5060-9436	7		SWITCH, PUSHBUTTON	28480	5060-9436
A1S14	5060-9436	7		SWITCH, PUSHBUTTON	28480	5060-9436
A1S15	5060-9436	7		SWITCH, PUSHBUTTON	28480	5060-9436
A1S16	5060-9436	7		SWITCH, PUSHBUTTON	28480	5060-9436
A1S17	5060-9436	7		SWITCH, PUSHBUTTON	28480	5060-9436
A1S18	5060-9436	7		SWITCH, PUSHBUTTON	28480	5060-9436
A1S19	5060-9436	7		SWITCH, PUSHBUTTON	28480	5060-9436
A1S20	5060-9436	7		SWITCH, PUSHBUTTON	28480	5060-9436
A1S21	5060-9436	7		SWITCH, PUSHBUTTON	28480	5060-9436
A1S22	5060-9436	7		SWITCH, PUSHBUTTON	28480	5060-9436
A1S23	3101-2220	9	2	SWITCH-SL DPDT-NS MINTR .5A 125VAC/DC PC	28480	3101-2220
A1S24	3101-2220	9		SWITCH-SL DPDT-NS MINTR .5A 125VAC/DC PC	28480	3101-2220
A1TP1	1251-0600	0	2	CONNECTOR-SGL CONT PIN 1.14-MM-BSC-SZ SQ	28480	1251-0600
A1TP2	1251-0600	0		CONNECTOR-SGL CONT PIN 1.14-MM-BSC-SZ SQ	28480	1251-0600
				A1 MISCELLANEOUS PARTS		
	0624-0097	9	2	SCREW-TPG 4-40 .188-IN-LG PAN-HD-POZI	28480	0624-0097
	1200-0474	9	11	SOCKET-IC 14-CONT DIP-SLDR	28480	1200-0474
	3050-0079	3	2	WASHER-FL NM NO. 2 .094-IN-ID .188-IN-OD	28480	3050-0079
	5041-0276	5	2	KEY CAP, PEARL GRAY	28480	5041-0276
	5041-0285	6	2	KEY CAP, PEARL GLP	28480	5041-0285
	5041-0318	6	5	KEY CAP, PUT GLP	28480	5041-0318
	5041-0342	6	1	KEY CAP, BG QTR	28480	5041-0342
	5041-0450	7	1	KEY CAP, BLUE QTR	28480	5041-0450
	5041-0784	0	1	KEY CAP, #5	28480	5041-0784
	5041-0785	1	2	KEY CAP, 6 3[9	28480	5041-0785
	5041-0786	2	1	KEY CAP, #7	28480	5041-0786
	5041-0787	3	1	KEY CAP, #8	28480	5041-0787
	5041-0788	4	1	KEY CAP, #0	28480	5041-0788
	5041-0789	5	1	KEY CAP, #.	28480	5041-0789
	5041-0802	3	1	KEY CAP, #1	28480	5041-0802
	5041-0803	4	1	KEY CAP, #2	28480	5041-0803
	5041-0804	5	1	KEY CAP, #3	28480	5041-0804
	5041-0805	6	1	KEY CAP, #4	28480	5041-0805
	05342-00014	5	1	SHIELD, INPUT	28480	05342-00014
	05342-20104	6	1	BLOCK, ANNUNCIATOR	28480	05342-20104

See introduction to this section for ordering information
*Indicates factory selected value

Table 6-3. Replaceable Parts (Continued)

Reference Designation	HP Part Number	C D	Qty	Description	Mfr Code	Mfr Part Number
A2	05342-60002	7	1	DISPLAY DRIVER ASSEMBLY (SERIES 1828)	28480	05342-60002
A2C2	0160-3879	7	5	CAPACITOR-FXD .01UF +-20% 100VDC CER	28480	0160-3879
A2C3	0180-0230	0	1	CAPACITOR-FXD 1UF+-20% 50VDC TA	56289	150D105X0050A2
A2C4	0160-3879	7		CAPACITOR-FXD .01UF +-20% 100VDC CER	28480	0160-3879
A2C5	0180-1743	2	1	CAPACITOR-FXD .1UF+-10% 35VDC TA	56289	150D104X9035A2
A2C6	0160-3879	7		CAPACITOR-FXD .01UF +-20% 100VDC CER	28480	0160-3879
A2C9	0180-0106	9	2	CAPACITOR-FXD 60UF+-20% 6VDC TA	56289	150D606X000682
A2C7	0160-3878	6	2	CAPACITOR-FXD 1000PF +-20% 100VDC CER	28480	0160-3878
A2C8	0160-3879	7		CAPACITOR-FXD .01UF +-20% 100VDC CER	28480	0160-3879
A2C9				NOT ASSIGNED		
A2C10	0180-1714	7	1	CAPACITOR-FXD 330UF+-10% 6VDC TA	56289	150D337X900682
A2C11	0160-3879	7		CAPACITOR-FXD .01UF +-20% 100VDC CER	28480	0160-3879
A2C12,C13,C14,C15				NOT ASSIGNED		
A2C16	0180-0106	9		CAPACITOR-FXD 60UF+-20% 6VDC TA	56289	150D606X000682
A2C17	0160-3878	6		CAPACITOR-FXD 1000PF +-20% 100VDC CER	28480	0160-3878
A2C18	0160-0573	2	2	CAPACITOR-FXD 4700PF +-20% 100VDC CER	28480	0160-0573
A2C19	0160-0573	2		CAPACITOR-FXD 4700PF +-20% 100VDC CER	28480	0160-0573
A2C20	0160-0570	9	1	CAPACITOR-FXD 220PF +-20% 100VDC CER	28480	0160-0570
A2Q1	1854-0560	9	1	TRANSISTOR NPN SI DARL PD=310MW	04713	SPS6740
A2R1	0757-0420	3	1	RESISTOR 750 1% .125W F TC=0+-100	24546	C4-1/8-T0-751-F
A2R2	1810-0125	0	1	NETWORK-RES 8-PIN-SIP .125-PIN-SPCG	28480	1810-0125
A2R9	2100-3607	5	1	RESISTOR-VAR CONTROL CCP 1M 10% LIN (NOT SUPPLIED WITH 05342-60002, MUST BE ORDERED SEPARATELY)	01121	WP4N102P105UZ
A2R3	0683-5105	4	1	RESISTOR 51 5% .25W FC TC=-400/+500	01121	CB5105
A2R4	0683-2205	9	8	RESISTOR 22 5% .25W FC TC=-400/+500	01121	CB2205
A2R5	0683-1015	7	2	RESISTOR 100 5% .25W FC TC=-400/+500	01121	CB1015
A2R6	0683-2205	9		RESISTOR 22 5% .25W FC TC=-400/+500	01121	CB2205
A2R7	0683-1025	9	1	RESISTOR 1K 5% .25W FC TC=-400/+600	01121	CB1025
A2R8	0683-2205	9		RESISTOR 22 5% .25W FC TC=-400/+500	01121	CB2205
A2R10	0683-4725	2	10	RESISTOR 4.7K 5% .25W FC TC=-400/+700	01121	CB4725
A2R11	0683-2205	9		RESISTOR 22 5% .25W FC TC=-400/+500	01121	CB2205
A2R12	0683-4725	2		RESISTOR 4.7K 5% .25W FC TC=-400/+700	01121	CB4725
A2R13	0683-2205	9		RESISTOR 22 5% .25W FC TC=-400/+500	01121	CB2205
A2R14	0683-2205	9		RESISTOR 22 5% .25W FC TC=-400/+500	01121	CB2205
A2R15	0683-2205	9		RESISTOR 22 5% .25W FC TC=-400/+500	01121	CB2205
A2R16	0683-2205	9		RESISTOR 22 5% .25W FC TC=-400/+500	01121	CB2205
A2R17	1810-0164	7	1	NETWORK-RES 9-PIN-SIP .15-PIN-SPCG	28480	1810-0164
A2R18	0683-4725	2		RESISTOR 4.7K 5% .25W FC TC=-400/+700	01121	CB4725
A2R19	0683-4725	2		RESISTOR 4.7K 5% .25W FC TC=-400/+700	01121	CB4725
A2R20	0683-4725	2		RESISTOR 4.7K 5% .25W FC TC=-400/+700	01121	CB4725
A2R21	0683-4725	2		RESISTOR 4.7K 5% .25W FC TC=-400/+700	01121	CB4725
A2R22	0683-1015	7		RESISTOR 100 5% .25W FC TC=-400/+500	01121	CB1015
A2R24	0683-4725	2		RESISTOR 4.7K 5% .25W FC TC=-400/+700	01121	CB4725
A2R26	0683-4725	2		RESISTOR 4.7K 5% .25W FC TC=-400/+700	01121	CB4725
A2R28	0683-4725	2		RESISTOR 4.7K 5% .25W FC TC=-400/+700	01121	CB4725
A2R35	0683-4725	2		RESISTOR 4.7K 5% .25W FC TC=-400/+700	01121	CB4725
A2TP1	1251-0600	0	3	CONNECTOR-SGL CONT PIN 1.14-MM-BSC-SZ SQ	28480	1251-0600
A2TP2	1251-0600	0		CONNECTOR-SGL CONT PIN 1.14-MM-BSC-SZ SQ	28480	1251-0600
A2TP3	1251-0600	0		CONNECTOR-SGL CONT PIN 1.14-MM-BSC-SZ SQ	28480	1251-0600
A2U1	1820-0539	1	2	IC BFR TTL NAND QUAD 2-INP	01295	SN7437N
A2U2	1820-0468	5	2	IC DCDR TTL BCD-TO-DEC 4-TO-10-LINE	01295	SN7445N
A2U3	1820-1443	8	1	IC CNTR TTL LS BIN ASYNCHRO	01295	SN74LS293N
A2U4	1820-0539	1		IC BFR TTL NAND QUAD 2-INP	01295	SN7437N
A2U5	1820-1416	5	1	IC SCHMITT-TRIG TTL LS INV HEX 1-INP	01295	SN74LS14N
A2U6	1820-1049	0	1	IC BFR TTL NON-INV HEX	01295	SN74367N
A2U7	1820-0468	5		IC DCDR TTL BCD-TO-DEC 4-TO-10-LINE	01295	SN7445N
A2U8	1820-1028	5	2	IC-DGTL,64BIT RAM,TTL	01295	SN7189N
A2U9	1820-1144	6	1	IC GATE TTL LS NOR QUAD 2-INP	01295	SN74LS02N
A2U10	1820-1200	5	1	IC INV TTL LS HEX	01295	SN74LS05N
A2U11	1820-1028	5		IC-DGTL,64BIT RAM,TTL	01295	SN7189N
A2U12	1820-1254	9	2	IC BFR TTL NON-INV HEX 1-INP	27014	DM8095N
A2U13	1820-1425	6	1	IC SCHMITT-TRIG TTL LS NAND QUAD 2-INP	01295	SN74LS132N
A2U16	1820-1254	9		IC BFR TTL NON-INV HEX 1-INP	27014	DM8095N
A2U17	1820-1428	9	1	IC MUXR/DATA-SEL TTL LS 2-TO-1-LINE QUAD	01295	SN74LS158N
A2U18	1820-1112	8	2	IC FF TTL LS D-TYPE POS-EDGE-TRIG	01295	SN74LS74N
A2U19	1820-1112	8		IC FF TTL LS D-TYPE POS-EDGE-TRIG	01295	SN74LS74N
A2U22	1820-1885	2	1	IC RGTR TTL LS D-TYPE QUAD	27014	DM74LS173N
				A2 MISCELLANEOUS PARTS		
	0380-0336	1	5	SPACER-RVT-ON .312-IN-LG .152-IN-ID	00000	ORDER BY DESCRIPTION
	1200-0565	9	1	SOCKET-IC 24-CONT DIP-SLDR	28480	1200-0565

See introduction to this section for ordering information
*Indicates factory selected value

Table 6-3. Replaceable Parts (Continued)

Reference Designation	HP Part Number	C D	Qty	Description	Mfr Code	Mfr Part Number
A3	05342-60003	8	1	DIRECT COUNT AMPLIFIER ASSEMBLY (SERIES 1816)	28480	05342-60003
A3C1	0160-3879	7	9	CAPACITOR-FXD .01UF +-20% 100VDC CER	28480	0160-3879
A3C2	0160-3879	7		CAPACITOR-FXD .01UF +-20% 100VDC CER	28480	0160-3879
A3C3	0160-3878	6	7	CAPACITOR-FXD 1000PF +-20% 100VDC CER	28480	0160-3878
A3C4	0160-3878	6		CAPACITOR-FXD 1000PF +-20% 100VDC CER	28480	0160-3878
A3C5	0180-0490	4	3	CAPACITOR-FXD 68UF+-10% 6VDC TA	90201	TDC686K006WLF
A3C6	0180-0490	4		CAPACITOR-FXD 68UF+-10% 6VDC TA	90201	TDC686K006WLF
A3C7	0160-3876	4	2	CAPACITOR-FXD 47PF +-20% 200VDC CER	28480	0160-3876
A3C8	0160-3454	4	1	CAPACITOR-FXD 220PF +-10% 1KVDC CER	28480	0160-3454
A3C9	0160-3879	7		CAPACITOR-FXD .01UF +-20% 100VDC CER	28480	0160-3879
A3C10*	0160-3872	0	1	CAPACITOR-FXD 2.2PF +-.25PF 200VDC CER	28480	0160-3872
				*FACTORY SELECTED PART		
A3C11	0160-3879	7		CAPACITOR-FXD .01UF +-20% 100VDC CER	28480	0160-3879
A3C12	0180-0490	4		CAPACITOR-FXD 68UF+-10% 6VDC TA	90201	TDC686K006WLF
A3C13	0160-3879	7		CAPACITOR-FXD .01UF +-20% 100VDC CER	28480	0160-3879
A3C14	0160-3879	7		CAPACITOR-FXD .01UF +-20% 100VDC CER	28480	0160-3879
A3C15	0160-3876	4		CAPACITOR-FXD 47PF +-20% 200VDC CER	28480	0160-3876
A3C16	0160-3878	6		CAPACITOR-FXD 1000PF +-20% 100VDC CER	28480	0160-3878
A3C17	0160-0128	3	1	CAPACITOR-FXD 2.2UF +-20% 50VDC CER	28480	0160-0128
A3C18	0160-3879	7		CAPACITOR-FXD .01UF +-20% 100VDC CER	28480	0160-3879
A3C19	0160-3878	6		CAPACITOR-FXD 1000PF +-20% 100VDC CER	28480	0160-3878
A3C20	0160-3879	7		CAPACITOR-FXD .01UF +-20% 100VDC CER	28480	0160-3879
A3C21	0180-0491	5	1	CAPACITOR-FXD 10UF+-20% 25VDC TA	28480	0180-0491
A3C22	0160-3878	6		CAPACITOR-FXD 1000PF +-20% 100VDC CER	28480	0160-3878
A3C23	0160-3879	7		CAPACITOR-FXD .01UF +-20% 100VDC CER	28480	0160-3879
A3C24	0160-3878	6		CAPACITOR-FXD 1000PF +-20% 100VDC CER	28480	0160-3878
A3C25	0160-3877	5	1	CAPACITOR-FXD 100PF +-20% 200VDC CER	28480	0160-3877
A3C26	0160-3878	6		CAPACITOR-FXD 1000PF +-20% 100VDC CER	28480	0160-3878
A3CR1	1901-0040	1	2	DIODE-SWITCHING 30V 50MA 2NS DO-35	28480	1901-0040
A3CR2	1901-0040	1		DIODE-SWITCHING 30V 50MA 2NS DO-35	28480	1901-0040
A3CR3	1901-0535	9	4	DIODE-SCHOTTKY	28480	1901-0535
A3CR4	1901-0535	9		DIODE-SCHOTTKY	28480	1901-0535
A3CR5	1901-0050	3	2	DIODE-SWITCHING 80V 200MA 2NS DO-35	28480	1901-0050
A3CR6	1901-0535	9		DIODE-SCHOTTKY	28480	1901-0535
A3CR7	1901-0535	9		DIODE-SCHOTTKY	28480	1901-0535
A3CR8	1901-0050	3		DIODE-SWITCHING 80V 200MA 2NS DO-35	28480	1901-0050
A3E1	9170-0029	3	2	CORE-SHIELDING BEAD	28480	9170-0029
A3E2	9170-0029	3		CORE-SHIELDING BEAD	28480	9170-0029
A3F1	2110-0436	3	1	FUSE .1A 125V FAST-BLO .348X.25 UL	28480	2110-0436
A3L1	9100-1788	6	2	CHOKE-WIDE BAND ZMAX=680 OHMS 180 MHZ	02114	VK200 20/4B
A3L2	9100-1788	6		CHOKE-WIDE BAND ZMAX=680 OHMS 180 MHZ	02114	VK200 20/4B
A3Q1	1854-0215	1	1	TRANSISTOR NPN SI PD=350MW FT=300MHZ	04713	SPS 3611
A3Q2	1855-0081	1	2	TRANSISTOR J-FET N-CHAN D-MODE SI	01295	2N5245
A3Q3	1855-0081	1		TRANSISTOR J-FET N-CHAN D-MODE SI	01295	2N5245
A3Q4	1853-0015	7	1	TRANSISTOR PNP SI PD=200MW FT=500MHZ	28480	1853-0015
A3Q5	1854-0546	1	2	TRANSISTOR NPN SI TO-72 PD=200MW	28480	1854-0546
A3Q6	1854-0071	7	4	TRANSISTOR NPN SI PD=300MW FT=200MHZ	28480	1854-0071
A3Q7	1854-0071	7		TRANSISTOR NPN SI PD=300MW FT=200MHZ	28480	1854-0071
A3Q8	1854-0071	7		TRANSISTOR NPN SI PD=300MW FT=200MHZ	28480	1854-0071
A3Q9	1854-0071	7		TRANSISTOR NPN SI PD=300MW FT=200MHZ	28480	1854-0071
A3Q10	1854-0546	1		TRANSISTOR NPN SI TO-72 PD=200MW	28480	1854-0546
A3R1	0698-5180	6	2	RESISTOR 2K 5% .125W CC TC=-350/+857	01121	BB2025
A3R2	0698-7242	5	1	RESISTOR 1.78K 1% .05W F TC=0+-100	24546	C3-1/8-T0-1781-G
A3R3	0698-5426	3	2	RESISTOR 10K 10% .125W CC TC=-350/+857	01121	BB1031
A3R4	0698-3437	2	1	RESISTOR 133 1% .125W F TC=0+-100	24546	C4-1/8-T0-133R-F
A3R5	0757-0399	5	1	RESISTOR 82.5 1% .125W F TC=0+-100	24546	C4-1/8-T0-82R5-F
A3R6	0698-5176	0	4	RESISTOR 510 5% .125W CC TC=-330/+800	01121	BB5115
A3R7	0698-5426	3		RESISTOR 10K 10% .125W CC TC=-350/+857	01121	BB1031
A3R8	2100-3273	1	1	RESISTOR-TRMR 2K 10% C SIDE-ADJ 1-TRN	28480	2100-3273
A3R9	0698-5566	2	1	RESISTOR 2.4K 5% .125W CC TC=-350/+857	01121	BB2425
A3R10	0698-6294	5	3	RESISTOR 47K 5% .125W CC TC=-466/+875	01121	BB4735
A3R11	0698-6283	2	1	RESISTOR 10 5% .125W CC TC=-120/+400	01121	BB1005
A3R12	0698-3375	7	1	RESISTOR 33 5% .125W CC TC=-270/+540	01121	BB3305
A3R13	0698-8373	5	2	RESISTOR 470K 5% .125W CC TC=-600/+1137	01121	BB4745
A3R14	0757-0280	3	1	RESISTOR 1K 1% .125W F TC=0+-100	24546	C4-1/8-T0-1001-F
A3R15*	0757-0316	6	3	RESISTOR 42.2 1% .125W F TC=0+-100	24546	C4-1/8-T0-42R2-F
				*FACTORY SELECTED PART		
A3R16*	0698-3378	0	1	RESISTOR 51 5% .125W CC TC=-270/+540	01121	BB5105
A3R17	0698-4102	0	1	RESISTOR 2.06K 1% .125W F TC=0+-100	03888	PME55-1/8-T0-2061-F
A3R18	0698-6294	5		RESISTOR 47K 5% .125W CC TC=-466/+875	01121	BB4735
A3R19	0698-5176	0		RESISTOR 510 5% .125W CC TC=-330/+800	01121	BB5115
A3R20	0698-5177	1	1	RESISTOR 820 5% .125W CC TC=-330/+800	01121	BB8215
				*FACTORY SELECTED PART		

See introduction to this section for ordering information
*Indicates factory selected value

Table 6-3. Replaceable Parts (Continued)

Reference Designation	HP Part Number	C D	Qty	Description	Mfr Code	Mfr Part Number
A3R21	0698-6242	3	5	RESISTOR 1.2K 5% .125W CC TC=-350/+857	01121	BB1225
A3R22	0698-6294	5		RESISTOR 47K 5% .125W CC TC=-466/+875	01121	BB4735
A3R23	0698-5183	9	1	RESISTOR 4.3K 5% .125W CC TC=0+882	01121	BB4325
A3R24	0698-6242	3		RESISTOR 1.2K 5% .125W CC TC=-350/+857	01121	BB1225
A3R25	0698-5179	3	1	RESISTOR 1.8K 5% .125W CC TC=-350/+857	01121	BB1825
A3R26	0698-3374	6	1	RESISTOR 20 5% .125W CC TC=-270/+540	01121	BB20G5
A3R27	0698-6242	3		RESISTOR 1.2K 5% .125W CC TC=-350/+857	01121	BB1225
A3R28	0698-6241	2	3	RESISTOR 750 5% .125W CC TC=-330/+800	01121	BB7515
A3R29	0698-5176	0		RESISTOR 510 5% .125W CC TC=-330/+800	01121	BB5115
A3R30	0698-8373	5		RESISTOR 470K 5% .125W CC TC=-600/+1137	01121	BB4745
A3R31	0757-0316	6		RESISTOR 42.2 1% .125W F TC=0+-100	24546	C4-1/8-T0-42R2-F
A3R32	0698-7080	9	2	RESISTOR 27 5% .125W CC TC=-270/+540	01121	BB2705
A3R33	0757-0276	7	1	RESISTOR 61.9 1% .125W F TC=0+-100	24546	C4-1/8-T0-61R9-F
A3R34	0698-5174	6	2	RESISTOR 200 5% .125W CC TC=-330/+800	01121	BB2015
A3R35	0698-6242	3		RESISTOR 1.2K 5% .125W CC TC=-350/+857	01121	BB1225
A3R36	0698-5176	0		RESISTOR 510 5% .125W CC TC=-330/+800	01121	BB5115
A3R37	0698-6241	2		RESISTOR 750 5% .125W CC TC=-330/+800	01121	BB7515
A3R38	0698-6241	2		RESISTOR 750 5% .125W CC TC=-330/+800	01121	BB7515
A3R39	0698-7080	9		RESISTOR 27 5% .125W CC TC=-270/+540	01121	BB2705
A3R40	0757-0316	6		RESISTOR 42.2 1% .125W F TC=0+-100	24546	C4-1/8-T0-42R2-F
A3R41	0698-8354	2	1	RESISTOR 270 5% .125W CC TC=-330/+800	01121	BB2715
A3R42	0675-1021	8	2	RESISTOR 1K 10% .125W CC TC=-330/+800	01121	BB1021
A3R43	0675-1021	8		RESISTOR 1K 10% .125W CC TC=-330/+800	01121	BB1021
A3R44	0698-6242	3		RESISTOR 1.2K 5% .125W CC TC=-350/+857	01121	BB1225
A3R45	0683-5605	9	1	RESISTOR 56 5% .25W FC TC=-400/+500	01121	CB5605
A3R46	0698-5180	6		RESISTOR 2K 5% .125W CC TC=-350/+857	01121	BB2025
A3R47	0698-5174	8		RESISTOR 200 5% .125W CC TC=-330/+800	01121	BB2015
A3R48	0757-0394	0	1	RESISTOR 51.1 1% .125W F TC=0+-100	24546	C4-1/8-T0-51R1-F
A3TP1	1251-0600	0	3	CONNECTOR-SGL CONT PIN 1.14-MM-BSC-SZ SQ	28480	1251-0600
A3TP2	1251-0600	0		CONNECTOR-SGL CONT PIN 1.14-MM-BSC-SZ SQ	28480	1251-0600
A3TP3	1251-0600	0		CONNECTOR-SGL CONT PIN 1.14-MM-BSC-SZ SQ	28480	1251-0600
A3U1	1820-0736	0	2	IC CNTR ECL BIN DUAL	28480	1820-0736
A3U2	1820-1224	3	1	IC RCVR ECL LINE RCVR TPL 2-INP	04713	MC10216P
A3U3	1826-0139	9	1	IC 1458 OP AMP 8-DIP-P	01928	CA1458G
A3U4	1820-0736	0		IC CNTR ECL BIN DUAL	28480	1820-0736
A3U5	1820-0982	8	3	IC DIFF AMPL 16-DIP-C	28480	1820-0982
A3U6	1820-0982	8		IC DIFF AMPL 16-DIP-C	28480	1820-0982
A3U7	1820-0982	8		IC DIFF AMPL 16-DIP-C	28480	1820-0982
				A3 MISCELLANEOUS PARTS		
	0380-0970	9	1	STANDOFF-HEX .375-IN-LG 4-40THD	28480	0380-0970
	1251-3205	7	2	CONNECTOR-SGL CONT SKT .022-IN-BSC-SZ	28480	1251-3205
	3050-0105	6	2	WASHER-FL MTLC NO. 4 .125-IN-ID	28480	3050-0105
	05342-20101	3	1	SCREW, GROUND	28480	05342-20101

See introduction to this section for ordering information
*Indicates factory selected value

Table 6-3. Replaceable Parts (Continued)

Reference Designation	HP Part Number	C D	Qty	Description	Mfr Code	Mfr Part Number
A4	05342-60004	9	1	OFFSET VCO ASSEMBLY (SERIES 1720)	28480	05342-60004
A4C1	0180-0210	6	1	CAPACITOR-FXD 3.3UF+-20% 15VDC TA	56289	150D335X0015A2
A4C2	0180-1701	2	4	CAPACITOR-FXD 6.8UF+-20% 6VDC TA	56289	150D685X0006A2
A4C3	0180-1701	2		CAPACITOR-FXD 6.8UF+-20% 6VDC TA	56289	150D685X0006A2
A4C4	0160-3878	6	15	CAPACITOR-FXD 1000PF +-20% 100VDC CER	28480	0160-3878
A4C5	0180-1701	2		CAPACITOR-FXD 6.8UF+-20% 6VDC TA	56289	150D685X0006A2
A4C6	0180-1701	2		CAPACITOR-FXD 6.8UF+-20% 6VDC TA	56289	150D685X0006A2
A4C7	0160-3878	6		CAPACITOR-FXD 1000PF +-20% 100VDC CER	28480	0160-3878
A4C8	0160-3878	6		CAPACITOR-FXD 1000PF +-20% 100VDC CER	28480	0160-3878
A4C9	0160-3878	6		CAPACITOR-FXD 1000PF +-20% 100VDC CER	28480	0160-3878
A4C10	0160-3878	6		CAPACITOR-FXD 1000PF +-20% 100VDC CER	28480	0160-3878
A4C11	0160-3878	6		CAPACITOR-FXD 1000PF +-20% 100VDC CER	28480	0160-3878
A4C12	0160-3878	6		CAPACITOR-FXD 1000PF +-20% 100VDC CER	28480	0160-3878
A4C13	0160-3878	6		CAPACITOR-FXD 1000PF +-20% 100VDC CER	28480	0160-3878
A4C14	0160-3878	6		CAPACITOR-FXD 1000PF +-20% 100VDC CER	28480	0160-3878
A4C15	0180-0228	6	1	CAPACITOR-FXD 22UF+-10% 15VDC TA	56289	150D226X901582
A4C16	0160-3878	6		CAPACITOR-FXD 1000PF +-20% 100VDC CER	28480	0160-3878
A4C17	0160-3878	6		CAPACITOR-FXD 1000PF +-20% 100VDC CER	28480	0160-3878
A4C18	0160-3878	6		CAPACITOR-FXD 1000PF +-20% 100VDC CER	28480	0160-3878
A4C19	0160-3877	5	3	CAPACITOR-FXD 100PF +-20% 200VDC CER	28480	0160-3877
A4C20	0160-3877	5		CAPACITOR-FXD 100PF +-20% 200VDC CER	28480	0160-3877
A4C21	0160-3878	6		CAPACITOR-FXD 1000PF +-20% 100VDC CER	28480	0160-3878
A4C22	0160-3872	0	1	CAPACITOR-FXD 2.2PF +-.25PF 200VDC CER	28480	0160-3872
A4C23	0160-3878	6		CAPACITOR-FXD 1000PF +-20% 100VDC CER	28480	0160-3878
A4C24	0160-3878	6		CAPACITOR-FXD 1000PF +-20% 100VDC CER	28480	0160-3878
A4C25	0160-3877	5		CAPACITOR-FXD 100PF +-20% 200VDC CER	28480	0160-3877
A4CR1	1902-3171	7	1	DIODE-ZNR 11V 5% DO-7 PD=.4W TC=+.062%	28480	1902-3171
A4CR2	0122-0065	7	2	CAPACITOR;VOLTAGE VAR;29 PF/-3V	28480	0122-0065
A4CR3	0122-0065	7		CAPACITOR;VOLTAGE VAR;29 PF/-3V	28480	0122-0065
A4E1	9170-0016	8	1	CORE-SHIELDING BEAD	28480	9170-0016
A4L1	9100-2268	9	7	COIL-MLD 22UH 10% Q=45 .095DX.25LG-NOM	28480	9100-2268
A4L2	9100-2268	9		COIL-MLD 22UH 10% Q=45 .095DX.25LG-NOM	28480	9100-2268
A4L3	9100-2268	9		COIL-MLD 22UH 10% Q=45 .095DX.25LG-NOM	28480	9100-2268
A4L4	9100-2268	9		COIL-MLD 22UH 10% Q=45 .095DX.25LG-NOM	28480	9100-2268
A4L5	9100-2268	9		COIL-MLD 22UH 10% Q=45 .095DX.25LG-NOM	28480	9100-2268
A4L6	9100-2247	4	2	COIL-MLD 100NH 10% Q=34 .095DX.25LG-NOM	28480	9100-2247
A4L7	9100-2268	9		COIL-MLD 22UH 10% Q=45 .095DX.25LG-NOM	28480	9100-2268
A4L8	9100-2268	9		COIL-MLD 22UH 10% Q=45 .095DX.25LG-NOM	28480	9100-2268
A4L9	9100-2247	4		COIL-MLD 100NH 10% Q=34 .095DX.25LG-NOM	28480	9100-2247
A4Q1	1854-0071	7	1	TRANSISTOR NPN SI PD=300MW FT=200MHZ	28480	1854-0071
A4Q2	1854-0345	8	1	TRANSISTOR NPN 2N5179 SI TO-72 PD=200MW	04713	2N5179
A4R1	2100-2489	9	1	RESISTOR-TRMR 5K 10% C SIDE-ADJ 1-TRN	30983	ET50X502
A4R2	0698-3380	4	1	RESISTOR 75 5% .125W CC TC=-270/+540	01121	BB7505
A4R3	0698-5426	3	1	RESISTOR 10K 10% .125W CC TC=-350/+857	01121	BB1031
A4R4	0698-5178	2	1	RESISTOR 1.5K 5% .125W CC TC=-350/+857	01121	BB1525
A4R5	0698-5174	8	1	RESISTOR 200 5% .125W CC TC=-330/+800	01121	BB2015
A4R6	0698-5999	5	3	RESISTOR 4.7K 5% .125W CC TC=-350/+857	01121	BB4725
A4R7	0698-5999	5		RESISTOR 4.7K 5% .125W CC TC=-350/+857	01121	BB4725
A4R8	0698-5172	6	2	RESISTOR 13 5% .125W CC TC=-270/+540	01121	BB1305
A4R9	0698-5999	5		RESISTOR 4.7K 5% .125W CC TC=-350/+857	01121	BB4725
A4R10	0698-5175	8	2	RESISTOR 130 5% .125W CC TC=-330/+800	01121	BB1315
A4R11	0698-3376	8	2	RESISTOR 43 5% .125W CC TC=-270/+540	01121	BB4305
A4R12	0698-3378	0	2	RESISTOR 51 5% .125W CC TC=-270/+540	01121	BB5105
A4R13	0698-7212	9	1	RESISTOR 100 1% .05W F TC=0+-100	24546	C3-1/8-T0-100R-G
A4R14	0698-3376	8		RESISTOR 43 5% .125W CC TC=-270/+540	01121	BB4305
A4R15	0698-5172	6		RESISTOR 13 5% .125W CC TC=-270/+540	01121	BB1305
A4R16	0698-5996	2	1	RESISTOR 560 5% .125W CC TC=-330/+800	01121	BB5615
A4R17	0698-5175	8		RESISTOR 130 5% .125W CC TC=-330/+800	01121	BB1315
A4R18	0698-3378	0		RESISTOR 51 5% .125W CC TC=-270/+540	01121	BB5105
A4U1	1826-0372	2	2	IC 5 GHZ LIMITER/AMP	28480	1826-0372
A4U2	1826-0372	2		IC 5 GHZ LIMITER/AMP	28480	1826-0372
				A4 MISCELLANEOUS PARTS		
	0363-0133	0	2	CONTACT-FINGER .13-WD .09-FREE-HGT BE-CU	28480	0363-0133
	0380-0970	9	1	STANDOFF-HEX .375-IN-LG 4-40THD	28480	0380-0970
	05342-20101	3	1	SCREW, GROUND	28480	05342-20101

See introduction to this section for ordering information
*Indicates factory selected value

Table 6-3. Replaceable Parts (Continued)

Reference Designation	HP Part Number	CD	Qty	Description	Mfr Code	Mfr Part Number
A5	05342-60005	0	1	RF MULTIPLEXER ASSEMBLY (SERIES 1720)	28480	05342-60005
A5C1	0160-3878	6	14	CAPACITOR-FXD 1000PF +-20% 100VDC CER	28480	0160-3878
A5C2	0160-3878	6		CAPACITOR-FXD 1000PF +-20% 100VDC CER	28480	0160-3878
A5C3	0160-3878	6		CAPACITOR-FXD 1000PF +-20% 100VDC CER	28480	0160-3878
A5C4	0160-3878	6		CAPACITOR-FXD 1000PF +-20% 100VDC CER	28480	0160-3878
A5C5	0180-0210	6	2	CAPACITOR-FXD 3.3UF+-20% 15VDC TA	56289	150D335X0015A2
A5C6	0160-3029	9	2	CAPACITOR-FXD 7.5PF +-.5PF 100VDC CER	28480	0160-3029
A5C7	0160-3878	6		CAPACITOR-FXD 1000PF +-20% 100VDC CER	28480	0160-3878
A5C8	0160-3876	4	2	CAPACITOR-FXD 47PF +-20% 200VDC CER	28480	0160-3876
A5C9	0160-3878	6		CAPACITOR-FXD 1000PF +-20% 100VDC CER	28480	0160-3878
A5C10	0160-3878	6		CAPACITOR-FXD 1000PF +-20% 100VDC CER	28480	0160-3878
A5C11	0160-3879	7	4	CAPACITOR-FXD .01UF +-20% 100VDC CER	28480	0160-3879
A5C12	0160-0576	5	3	CAPACITOR-FXD .1UF +-20% 50VDC CER	28480	0160-0576
A5C13	0160-3876	4		CAPACITOR-FXD 47PF +-20% 200VDC CER	28480	0160-3876
A5C14	0160-0576	5		CAPACITOR-FXD .1UF +-20% 50VDC CER	28480	0160-0576
A5C15	0160-3878	6		CAPACITOR-FXD 1000PF +-20% 100VDC CER	28480	0160-3878
A5C16	0160-3878	6		CAPACITOR-FXD 1000PF +-20% 100VDC CER	28480	0160-3878
A5C17	0160-3879	7		CAPACITOR-FXD .01UF +-20% 100VDC CER	28480	0160-3879
A5C18	0180-0210	6		CAPACITOR-FXD 3.3UF+-20% 15VDC TA	56289	150D335X0015A2
A5C19	0160-3879	7		CAPACITOR-FXD .01UF +-20% 100VDC CER	28480	0160-3879
A5C20	0160-3029	9		CAPACITOR-FXD 7.5PF +-.5PF 100VDC CER	28480	0160-3029
A5C21	0160-3878	6		CAPACITOR-FXD 1000PF +-20% 100VDC CER	28480	0160-3878
A5C22	0160-3878	6		CAPACITOR-FXD 1000PF +-20% 100VDC CER	28480	0160-3878
A5C23	0160-3878	6		CAPACITOR-FXD 1000PF +-20% 100VDC CER	28480	0160-3878
A5C24	0160-0576	5		CAPACITOR-FXD .1UF +-20% 50VDC CER	28480	0160-0576
A5C25	0160-3875	3	2	CAPACITOR-FXD 22PF +-5% 200VDC CER 0+-30	28480	0160-3875
A5C26	0160-3875	3		CAPACITOR-FXD 22PF +-5% 200VDC CER 0+-30	28480	0160-3875
A5C27	0160-3879	7		CAPACITOR-FXD .01UF +-20% 100VDC CER	28480	0160-3879
A5C28	0160-3878	6		CAPACITOR-FXD 1000PF +-20% 100VDC CER	28480	0160-3878
A5C29	0160-3878	6		CAPACITOR-FXD 1000PF +-20% 100VDC CER	28480	0160-3878
A5CR1	1901-0179	7	6	DIODE-SWITCHING 15V 50MA 750PS DO-7	28480	1901-0179
A5CR2	1901-0179	7		DIODE-SWITCHING 15V 50MA 750PS DO-7	28480	1901-0179
A5CR3	1901-0179	7		DIODE-SWITCHING 15V 50MA 750PS DO-7	28480	1901-0179
A5CR4	1901-0179	7		DIODE-SWITCHING 15V 50MA 750PS DO-7	28480	1901-0179
A5CR5	1901-0179	7		DIODE-SWITCHING 15V 50MA 750PS DO-7	28480	1901-0179
A5CR6	1901-0179	7		DIODE-SWITCHING 15V 50MA 750PS DO-7	28480	1901-0179
A5E1	9170-0029	3	2	CORE-SHIELDING BEAD	28480	9170-0029
A5E2	9170-0029	3		CORE-SHIELDING BEAD	28480	9170-0029
A5L1	9100-2265	6	2	COIL-MLD 10UH 10% Q=60 .095DX.25LG-NOM	28480	9100-2265
A5L2	9100-2255	4	10	COIL-MLD 470NH 10% Q=35 .095DX.25LG-NOM	28480	9100-2255
A5L3	9100-2255	4		COIL-MLD 470NH 10% Q=35 .095DX.25LG-NOM	28480	9100-2255
A5L5	9100-2255	4		COIL-MLD 470NH 10% Q=35 .095DX.25LG-NOM	28480	9100-2255
A5L6	9100-2255	4		COIL-MLD 470NH 10% Q=35 .095DX.25LG-NOM	28480	9100-2255
A5L7	9100-2248	5	1	COIL-MLD 120NH 10% Q=34 .095DX.25LG-NOM	28480	9100-2248
A5L8	9100-2255	4		COIL-MLD 470NH 10% Q=35 .095DX.25LG-NOM	28480	9100-2255
A5L10	9100-2269	0	2	COIL-MLD 27UH 10% Q=45 .095DX.25LG-NOM	28480	9100-2269
A5L11	9100-2269	0		COIL-MLD 27UH 10% Q=45 .095DX.25LG-NOM	28480	9100-2269
A5L12	9100-2255	4		COIL-MLD 470NH 10% Q=35 .095DX.25LG-NOM	28480	9100-2255
A5L13	9100-2255	4		COIL-MLD 470NH 10% Q=35 .095DX.25LG-NOM	28480	9100-2255
A5L14	9100-2255	4		COIL-MLD 470NH 10% Q=35 .095DX.25LG-NOM	28480	9100-2255
A5L15	9100-2255	4		COIL-MLD 470NH 10% Q=35 .095DX.25LG-NOM	28480	9100-2255
A5L16	9100-2265	6		COIL-MLD 10UH 10% Q=60 .095DX.25LG-NOM	28480	9100-2265
A5L17	9100-2255	4		COIL-MLD 470NH 10% Q=35 .095DX.25LG-NOM	28480	9100-2255
A5L18	05342-80001	8	1	COIL, 5-TURNS	28480	05342-80001
A5Q1	1853-0058	8	3	TRANSISTOR PNP SI PD=300MW FT=200MHZ	07263	832248
A5Q2	1853-0058	8		TRANSISTOR PNP SI PD=300MW FT=200MHZ	07263	832248
A5Q3	1853-0058	8		TRANSISTOR PNP SI PD=300MW FT=200MHZ	07263	832248
A5R1	0683-1215	9	1	RESISTOR 120 5% .25W FC TC=-400/+600	01121	CB1215
A5R2	0683-2005	7	1	RESISTOR 20 5% .25W FC TC=-400/+500	01121	CB2005
A5R3	0698-3113	1	4	RESISTOR 100 5% .125W CC TC=-270/+540	01121	BB1015
A5R4	0698-5172	6	1	RESISTOR 13 5% .125W CC TC=-270/+540	01121	BB1305
A5R5	0698-3378	0	2	RESISTOR 51 5% .125W CC TC=-270/+540	01121	BB5105
A5R6	0698-3111	9	4	RESISTOR 30 5% .125W CC TC=-270/+540	01121	BB3005
A5R7	0698-3111	9		RESISTOR 30 5% .125W CC TC=-270/+540	01121	BB3005
A5R8	0698-5174	8	2	RESISTOR 200 5% .125W CC TC=-330/+800	01121	BB2015
A5R9	0698-3380	4	2	RESISTOR 75 5% .125W CC TC=-270/+540	01121	BB7505
A5R10	0698-3113	1		RESISTOR 100 5% .125W CC TC=-270/+540	01121	BB1015
A5R11	0698-5561	7	2	RESISTOR 6.8 5% .125W CC TC=-120/+400	01121	BB68G5
A5R12	0698-5998	4	1	RESISTOR 15 5% .125W CC TC=-270/+540	01121	BB1505
A5R13	0698-5564	0	1	RESISTOR 240 5% .125W CC TC=-330/+800	01121	BB2415
A5R14	0757-0398	4	1	RESISTOR 75 1% .125W F TC=0+-100	24546	C4-1/8-T0-75R0-F
A5R15	0698-5561	7		RESISTOR 6.8 5% .125W CC TC=-120/+400	01121	BB68G5

See introduction to this section for ordering information
*Indicates factory selected value

Table 6-3. Replaceable Parts (Continued)

Reference Designation	HP Part Number	C D	Qty	Description	Mfr Code	Mfr Part Number
A5R16	0698-3113	1		RESISTOR 100 5% .125W CC TC=-270/+540	01121	BB1015
A5R17	0698-6241	2	2	RESISTOR 750 5% .125W CC TC=-330/+800	01121	BB7515
A5R18	0698-7228	7	2	RESISTOR 464 1% .05W F TC=0+-100	24546	C3-1/8-T0-464R-G
A5R19	0698-3378	0		RESISTOR 51 5% .125W CC TC=-270/+540	01121	BB5105
A5R20	0698-3111	9		RESISTOR 30 5% .125W CC TC=-270/+540	01121	BB3005
A5R21	0698-3111	9		RESISTOR 30 5% .125W CC TC=-270/+540	01121	BB3005
A5R22	0698-5174	8		RESISTOR 200 5% .125W CC TC=-330/+800	01121	BB2015
A5R23	0698-6241	2		RESISTOR 750 5% .125W CC TC=-330/+800	01121	BB7515
A5R24	0675-1021	8	1	RESISTOR 1K 10% .125W CC TC=-330/+800	01121	BB1021
A5R25	0698-3113	1		RESISTOR 100 5% .125W CC TC=-270/+540	01121	BB1015
A5R26	0698-3376	8	1	RESISTOR 43 5% .125W CC TC=-270/+540	01121	BB4305
A5R27	0698-7228	7		RESISTOR 464 1% .05W F TC=0+-100	24546	C3-1/8-T0-464R-G
A5R28	0698-3380	4		RESISTOR 75 5% .125W CC TC=-270/+540	01121	BB7505
A5U1	1826-0372	2	2	IC 5 GHZ LIMITER/AMP	28480	1826-0372
A5U2	1858-0059	9	2	TRANSISTOR ARRAY	28480	1858-0059
A5U3	1858-0059	9		TRANSISTOR ARRAY	28480	1858-0059
A5U4	1826-0372	2		IC 5 GHZ LIMITER/AMP	28480	1826-0372
A5W1	05342-60100	6	1	CABLE ASSEMBLY, MULTIPLEXER	28480	05342-60100
				A5 MISCELLANEOUS PARTS		
	0363-0133	0	2	CONTACT-FINGER .13-WD .09-FREE-HGT BE-CU	28480	0363-0133
	0380-0970	9	1	STANDOFF-HEX .375-IN-LG 4-40THD	28480	0380-0970
	05342-20101	3	1	SCREW, GROUND	28480	05342-20101

See introduction to this section for ordering information
*Indicates factory selected value

Table 6-3. Replaceable Parts (Continued)

Reference Designation	HP Part Number	C D	Qty	Description	Mfr Code	Mfr Part Number
A6	05342-60006	1	1	OFFSET LOOP AMPLIFIER ASSEMBLY (SERIES 1720)	28480	05342-60006
A6C1	0180-0228	6	2	CAPACITOR-FXD 22UF+-10% 15VDC TA	56289	150D226X9015B2
A6C2	0160-3879	7	6	CAPACITOR-FXD .01UF +-20% 100VDC CER	28480	0160-3879
A6C3	0180-0210	6	2	CAPACITOR-FXD 3.3UF+-20% 15VDC TA	56289	150D335X0015A2
A6C4	0160-3879	7		CAPACITOR-FXD .01UF +-20% 100VDC CER	28480	0160-3879
A6C5	0160-3879	7		CAPACITOR-FXD .01UF +-20% 100VDC CER	28480	0160-3879
A6C6	0180-0210	6		CAPACITOR-FXD 3.3UF+-20% 15VDC TA	56289	150D335X0015A2
A6C7	0160-3879	7		CAPACITOR-FXD .01UF +-20% 100VDC CER	28480	0160-3879
A6C8	0180-0228	6		CAPACITOR-FXD 22UF+-10% 15VDC TA	56289	150D226X9015B2
A6C9	0180-1701	2	1	CAPACITOR-FXD 6.8UF+-20% 6VDC TA	56289	150D685X0006A2
A6C10	0160-0128	3	1	CAPACITOR-FXD 2.2UF +-20% 50VDC CER	28480	0160-0128
A6C11	0160-3879	7		CAPACITOR-FXD .01UF +-20% 100VDC CER	28480	0160-3879
A6C12	0160-0162	5	1	CAPACITOR-FXD .022UF +-10% 200VDC POLYE	28480	0160-0162
A6C13	0160-3879	7		CAPACITOR-FXD .01UF +-20% 100VDC CER	28480	0160-3879
A6CR1	1902-3193	3	2	DIODE-ZNR 13.3V 5% DO-7 PD=.4W TC=+.059%	28480	1902-3193
A6CR2	1902-3193	3		DIODE-ZNR 13.3V 5% DO-7 PD=.4W TC=+.059%	28480	1902-3193
A6CR3	1901-0040	1	2	DIODE-SWITCHING 30V 50MA 2NS DO-35	28480	1901-0040
A6CR4	1901-0040	1		DIODE-SWITCHING 30V 50MA 2NS DO-35	28480	1901-0040
A6Q1	1853-0020	4	3	TRANSISTOR PNP SI PD=300MW FT=150MHZ	28480	1853-0020
A6Q2	1854-0071	7	1	TRANSISTOR NPN SI PD=300MW FT=200MHZ	28480	1854-0071
A6Q3	1853-0020	4		TRANSISTOR PNP SI PD=300MW FT=150MHZ	28480	1853-0020
A6Q4	1853-0020	4		TRANSISTOR PNP SI PD=300MW FT=150MHZ	28480	1853-0020
A6R1	2100-2489	9	1	RESISTOR-TRMR 5K 10% C SIDE-ADJ 1-TRN	30983	ET50X502
A6R2	2100-2633	5	1	RESISTOR-TRMR 1K 10% C SIDE-ADJ 1-TRN	30983	ET50X102
A6R3	0757-0288	1	1	RESISTOR 9.09K 1% .125W F TC=0+-100	19701	MF4C1/8-T0-9091-F
A6R4	0757-0279	0	4	RESISTOR 3.16K 1% .125W F TC=0+-100	24546	C4-1/8-T0-3161-F
A6R5	0757-0442	9	2	RESISTOR 10K 1% .125W F TC=0+-100	24546	C4-1/8-T0-1002-F
A6R6	0757-0280	3	4	RESISTOR 1K 1% .125W F TC=0+-100	24546	C4-1/8-T0-1001-F
A6R7	0757-0442	9		RESISTOR 10K 1% .125W F TC=0+-100	24546	C4-1/8-T0-1002-F
A6R8	0757-0279	0		RESISTOR 3.16K 1% .125W F TC=0+-100	24546	C4-1/8-T0-3161-F
A6R9	0757-0280	3		RESISTOR 1K 1% .125W F TC=0+-100	24546	C4-1/8-T0-1001-F
A6R10	0757-0416	7	1	RESISTOR 511 1% .125W F TC=0+-100	24546	C4-1/8-T0-511R-F
A6R11	0757-0280	3		RESISTOR 1K 1% .125W F TC=0+-100	24546	C4-1/8-T0-1001-F
A6R12	0757-0440	7	1	RESISTOR 7.5K 1% .125W F TC=0+-100	24546	C4-1/8-T0-7501-F
A6R13	0757-0289	2	1	RESISTOR 13.3K 1% .125W F TC=0+-100	19701	MF4C1/8-T0-1332-F
A6R14	0757-0280	3		RESISTOR 1K 1% .125W F TC=0+-100	24546	C4-1/8-T0-1001-F
A6R15	0757-0279	0		RESISTOR 3.16K 1% .125W F TC=0+-100	24546	C4-1/8-T0-3161-F
A6R16	0757-0438	3	1	RESISTOR 5.11K 1% .125W F TC=0+-100	24546	C4-1/8-T0-5111-F
A6R17	0757-0200	7	1	RESISTOR 5.62K 1% .125W F TC=0+-100	24546	C4-1/8-T0-5621-F
A6R18	0757-0424	7	1	RESISTOR 1.1K 1% .125W F TC=0+-100	24546	C4-1/8-T0-1101-F
A6R19	0757-0407	6	1	RESISTOR 200 1% .125W F TC=0+-100	24546	C4-1/8-T0-201-F
A6R20	0757-0401	0	1	RESISTOR 100 1% .125W F TC=0+-100	24546	C4-1/8-T0-101-F
A6R21	0698-3153	9	1	RESISTOR 3.83K 1% .125W F TC=0+-100	24546	C4-1/8-T0-3831-F
A6R22	0757-0199	3	1	RESISTOR 21.5K 1% .125W F TC=0+-100	24546	C4-1/8-T0-2152-F
A6R23	0757-0427	0	2	RESISTOR 1.5K 1% .125W F TC=0+-100	24546	C4-1/8-T0-1501-F
A6R24	0757-0427	0		RESISTOR 1.5K 1% .125W F TC=0+-100	24546	C4-1/8-T0-1501-F
A6R25	0757-0279	0		RESISTOR 3.16K 1% .125W F TC=0+-100	24546	C4-1/8-T0-3161-F
A6U1	1820-1425	6	1	IC SCHMITT-TRIG TTL LS NAND QUAD 2-INP	01295	SN74LS132N
A6U2	1820-0493	6	1	IC OP AMP 8-DIP-P	27014	LM307N
				A6 MISCELLANEOUS PARTS		
	1251-0600	0	1	CONNECTOR-SGL CONT PIN 1.14-MM-BSC-SZ SQ	28480	1251-0600
	5000-9043	6	1	PIN,P.C. BOARD EXTRACTOR	28480	5000-9043
	5040-6852	3	1	EXTRACTOR, ORANGE	28480	5040-6852

See introduction to this section for ordering information
*Indicates factory selected value

Table 6-3. Replaceable Parts (Continued)

Reference Designation	HP Part Number	C D	Qty	Description	Mfr Code	Mfr Part Number
A7	05342-60007	2	1	MIXER/SEARCH CONTROL ASSEMBLY (SERIES 1720)	28480	05342-60007
A7C1	0160-3879	7	9	CAPACITOR-FXD .01UF +-20% 100VDC CER	28480	0160-3879
A7C2	0160-3879	7		CAPACITOR-FXD .01UF +-20% 100VDC CER	28480	0160-3879
A7C3	0180-0155	8	2	CAPACITOR-FXD 2.2UF+-20% 20VDC TA	56289	150D225X0020A2
A7C4	0160-3879	7		CAPACITOR-FXD .01UF +-20% 100VDC CER	28480	0160-3879
A7C5	0180-0155	8		CAPACITOR-FXD 2.2UF+-20% 20VDC TA	56289	150D225X0020A2
A7C6	0160-3878	6	10	CAPACITOR-FXD 1000PF +-20% 100VDC CER	28480	0160-3878
A7C7	0180-1701	2	4	CAPACITOR-FXD 6.8UF+-20% 6VDC TA	56289	150D685X0006A2
A7C8	0160-3879	7		CAPACITOR-FXD .01UF +-20% 100VDC CER	28480	0160-3879
A7C9	0180-1701	2		CAPACITOR-FXD 6.8UF+-20% 6VDC TA	56289	150D685X0006A2
A7C10	0160-3878	6		CAPACITOR-FXD 1000PF +-20% 100VDC CER	28480	0160-3878
A7C11	0180-1701	2		CAPACITOR-FXD 6.8UF+-20% 6VDC TA	56289	150D685X0006A2
A7C12	0160-3878	6		CAPACITOR-FXD 1000PF +-20% 100VDC CER	28480	0160-3878
A7C13	0160-3879	7		CAPACITOR-FXD .01UF +-20% 100VDC CER	28480	0160-3879
A7C14	0180-1701	2		CAPACITOR-FXD 6.8UF+-20% 6VDC TA	56289	150D685X0006A2
A7C15	0160-3879	7		CAPACITOR-FXD .01UF +-20% 100VDC CER	28480	0160-3879
A7C16	0160-3875	3	1	CAPACITOR-FXD 22PF +-5% 200VDC CER 0+-30	28480	0160-3875
A7C17	0160-3878	6		CAPACITOR-FXD 1000PF +-20% 100VDC CER	28480	0160-3878
A7C18	0160-3878	6		CAPACITOR-FXD 1000PF +-20% 100VDC CER	28480	0160-3878
A7C19	0160-3879	7		CAPACITOR-FXD .01UF +-20% 100VDC CER	28480	0160-3879
A7C20	0160-3877	5	2	CAPACITOR-FXD 100PF +-20% 200VDC CER	28480	0160-3877
A7C21	0160-3878	6		CAPACITOR-FXD 1000PF +-20% 100VDC CER	28480	0160-3878
A7C22	0160-3879	7		CAPACITOR-FXD .01UF +-20% 100VDC CER	28480	0160-3879
A7C23	0160-3878	6		CAPACITOR-FXD 1000PF +-20% 100VDC CER	28480	0160-3878
A7C24	0160-3878	6		CAPACITOR-FXD 1000PF +-20% 100VDC CER	28480	0160-3878
A7C25	0160-3879	7		CAPACITOR-FXD .01UF +-20% 100VDC CER	28480	0160-3879
A7C26	0160-3878	6		CAPACITOR-FXD 1000PF +-20% 100VDC CER	28480	0160-3878
A7C27	0160-3877	5		CAPACITOR-FXD 100PF +-20% 200VDC CER	28480	0160-3877
A7C28	0160-3878	6		CAPACITOR-FXD 1000PF +-20% 100VDC CER	28480	0160-3878
A7CR1	1901-0518	8	2	DIODE-SCHOTTKY	28480	1901-0518
A7CR2	1901-0518	8		DIODE-SCHOTTKY	28480	1901-0518
A7L1	9100-2268	9	8	COIL-MLD 22UH 10% Q=45 .095DX.25LG-NOM	28480	9100-2268
A7L2	9100-2268	9		COIL-MLD 22UH 10% Q=45 .095DX.25LG-NOM	28480	9100-2268
A7L3	9100-2247	4	3	COIL-MLD 100NH 10% Q=34 .095DX.25LG-NOM	28480	9100-2247
A7L4	9100-2268	9		COIL-MLD 22UH 10% Q=45 .095DX.25LG-NOM	28480	9100-2268
A7L5	9100-2268	9		COIL-MLD 22UH 10% Q=45 .095DX.25LG-NOM	28480	9100-2268
A7L6	9100-2247	4		COIL-MLD 100NH 10% Q=34 .095DX.25LG-NOM	28480	9100-2247
A7L7	9100-2268	9		COIL-MLD 22UH 10% Q=45 .095DX.25LG-NOM	28480	9100-2268
A7L8	9100-2268	9		COIL-MLD 22UH 10% Q=45 .095DX.25LG-NOM	28480	9100-2268
A7L9	9100-2247	4		COIL-MLD 100NH 10% Q=34 .095DX.25LG-NOM	28480	9100-2247
A7L10	9100-2268	9		COIL-MLD 22UH 10% Q=45 .095DX.25LG-NOM	28480	9100-2268
A7L11	9100-2268	9		COIL-MLD 22UH 10% Q=45 .095DX.25LG-NOM	28480	9100-2268
A7Q1	1854-0345	8	2	TRANSISTOR NPN 2N5179 SI TO-72 PD=200MW	04713	2N5179
A7Q2	1854-0092	2	2	TRANSISTOR NPN SI PD=200MW FT=600MHZ	28480	1854-0092
A7Q3	1854-0092	2		TRANSISTOR NPN SI PD=200MW FT=600MHZ	28480	1854-0092
A7Q4	1854-0071	7	2	TRANSISTOR NPN SI PD=300MW FT=200MHZ	28480	1854-0071
A7Q5	1854-0071	7		TRANSISTOR NPN SI PD=300MW FT=200MHZ	28480	1854-0071
A7Q6	1854-0345	8		TRANSISTOR NPN 2N5179 SI TO-72 PD=200MW	04713	2N5179
A7R1	0698-7101	5	1	RESISTOR 3K 5% .125W CC TC=-350/+857	01121	BB3025
A7R2	0698-5426	3	2	RESISTOR 10K 1% .125W CC TC=-350/+857	01121	BB1031
A7R3	0698-5426	3		RESISTOR 10K 1% .125W CC TC=-350/+857	01121	BB1031
A7R4	0698-5180	6	4	RESISTOR 2K 5% .125W CC TC=-350/+857	01121	BB2025
A7R5	0698-5181	7	1	RESISTOR 3.6K 5% .125W CC TC=-350/+857	01121	BB3625
A7R6	0698-6294	5	1	RESISTOR 47K 5% .125W CC TC=-466/+875	01121	BB4735
A7R7	0698-3378	0	2	RESISTOR 51 5% .125W CC TC=-270/+540	01121	BB5105
A7R8	0698-5075	8	2	RESISTOR 130 5% .125W CC TC=-330/+800	01121	BB1315
A7R9	0698-3113	1	3	RESISTOR 100 5% .125W CC TC=-270/+540	01121	BB1015
A7R10	0698-5172	6	2	RESISTOR 13 5% .125W CC TC=-270/+540	01121	BB1305
A7R11	0698-5567	3	1	RESISTOR 27K 5% .125W CC TC=-466/+875	01121	BB2735
A7R12	0698-5174	8	1	RESISTOR 200 5% .125W CC TC=-330/+800	01121	BB2015
A7R13	0698-3113	1		RESISTOR 100 5% .125W CC TC=-270/+540	01121	BB1015
A7R14	0698-5565	1	1	RESISTOR 2.2K 5% .125W CC TC=-350/+857	01121	BB2225
A7R15	0698-5180	6		RESISTOR 2K 5% .125W CC TC=-350/+857	01121	BB2025
A7R16	0698-5180	6		RESISTOR 2K 5% .125W CC TC=-350/+857	01121	BB2025
A7R17	0698-5180	6		RESISTOR 2K 5% .125W CC TC=-350/+857	01121	BB2025
A7R18	0698-3378	0		RESISTOR 51 5% .125W CC TC=-270/+540	01121	BB5105
A7R19	0698-5075	8		RESISTOR 130 5% .125W CC TC=-330/+800	01121	BB1315
A7R20	0698-5172	6		RESISTOR 13 5% .125W CC TC=-270/+540	01121	BB1305
A7R21	0698-3113	1		RESISTOR 100 5% .125W CC TC=-270/+540	01121	BB1015
A7R22	0698-3379	1	1	RESISTOR 68 5% .125W CC TC=-270/+540	01121	BB6805
A7TP1	1251-0600	0	1	CONNECTOR-SGL CONT PIN 1.14-MM-BSC-SZ SQ	28480	1251-0600
A7U1	1820-0630	3	1	IC MISC TTL	04713	MC4044P
A7U2	1820-1206	1	1	IC GATE TTL LS NOR TPL 3-INP	01295	SN74LS27N
A7U3	1826-0372	2	2	IC 5 GHZ LIMITER/AMP	28480	1826-0372
A7U4	1826-0372	2		IC 5 GHZ LIMITER/AMP	28480	1826-0372

See introduction to this section for ordering information
*Indicates factory selected value

Table 6-3. Replaceable Parts (Continued)

Reference Designation	HP Part Number	C D	Qty	Description	Mfr Code	Mfr Part Number
A8	05342-60008	3	1	MAIN VCO ASSEMBLY (SERIES 1720)	28480	05342-60008
A8C1	0180-0228	6	1	CAPACITOR-FXD 22UF+-10% 15VDC TA	56289	150D226X901582
A8C2	0160-3878	6	17	CAPACITOR-FXD 1000PF +-20% 100VDC CER	28480	0160-3878
A8C3	0160-3878	6		CAPACITOR-FXD 1000PF +-20% 100VDC CER	28480	0160-3878
A8C4	0160-3877	5	4	CAPACITOR-FXD 100PF +-20% 200VDC CER	28480	0160-3877
A8C5	0160-3878	6		CAPACITOR-FXD 1000PF +-20% 100VDC CER	28480	0160-3878
A8C6	0160-3877	5		CAPACITOR-FXD 100PF +-20% 200VDC CER	28480	0160-3877
A8C7	0160-3872	0	1	CAPACITOR-FXD 2.2PF +-.25PF 200VDC CER	28480	0160-3872
A8C8	0160-3878	6		CAPACITOR-FXD 1000PF +-20% 100VDC CER	28480	0160-3878
A8C9	0160-3878	6		CAPACITOR-FXD 1000PF +-20% 100VDC CER	28480	0160-3878
A8C10	0160-3878	6		CAPACITOR-FXD 1000PF +-20% 100VDC CER	28480	0160-3878
A8C11	0160-3878	6		CAPACITOR-FXD 1000PF +-20% 100VDC CER	28480	0160-3878
A8C12	0160-3877	5		CAPACITOR-FXD 100PF +-20% 200VDC CER	28480	0160-3877
A8C13	0160-3878	6		CAPACITOR-FXD 1000PF +-20% 100VDC CER	28480	0160-3878
A8C14	0160-3878	6		CAPACITOR-FXD 1000PF +-20% 100VDC CER	28480	0160-3878
A8C15	0160-3878	6		CAPACITOR-FXD 1000PF +-20% 100VDC CER	28480	0160-3878
A8C16	0160-3878	6		CAPACITOR-FXD 1000PF +-20% 100VDC CER	28480	0160-3878
A8C17	0160-3877	5		CAPACITOR-FXD 100PF +-20% 200VDC CER	28480	0160-3877
A8C18	0160-3878	6		CAPACITOR-FXD 1000PF +-20% 100VDC CER	28480	0160-3878
A8C20	0160-3878	6		CAPACITOR-FXD 1000PF +-20% 100VDC CER	28480	0160-3878
A8C21	0160-3878	6		CAPACITOR-FXD 1000PF +-20% 100VDC CER	28480	0160-3878
A8C22	0160-3878	6		CAPACITOR-FXD 1000PF +-20% 100VDC CER	28480	0160-3878
A8C23	0180-0210	6	1	CAPACITOR-FXD 3.3UF+-20% 15VDC TA	56289	150D335X0015A2
A8C24	0180-1701	2	4	CAPACITOR-FXD 6.8UF+-20% 6VDC TA	56289	150D685X0006A2
A8C25	0180-1701	2		CAPACITOR-FXD 6.8UF+-20% 6VDC TA	56289	150D685X0006A2
A8C26	0160-3878	6		CAPACITOR-FXD 1000PF +-20% 100VDC CER	28480	0160-3878
A8C27	0180-1701	2		CAPACITOR-FXD 6.8UF+-20% 6VDC TA	56289	150D685X0006A2
A8C28	0180-1701	2		CAPACITOR-FXD 6.8UF+-20% 6VDC TA	56289	150D685X0006A2
A8C29	0160-3878	6		CAPACITOR-FXD 1000PF +-20% 100VDC CER	28480	0160-3878
A8CR1	0122-0065	7	2	CAPACITOR:VOLTAGE VAR:29 PF/-3V	28480	0122-0065
A8CR2	0122-0065	7		CAPACITOR:VOLTAGE VAR:29 PF/-3V	28480	0122-0065
A8CR3	1902-3171	7	1	DIODE-ZNR 11V 5% DO-7 PD=.4W TC=+.062%	28480	1902-3171
A8E1	9170-0016	8	1	CORE-SHIELDING BEAD	28480	9170-0016
A8L1	9100-2268	9	9	COIL-MLD 22UH 10% Q=45 .095DX.25LG-NOM	28480	9100-2268
A8L2	9100-2268	9		COIL-MLD 22UH 10% Q=45 .095DX.25LG-NOM	28480	9100-2268
A8L3	9100-2247	4	3	COIL-MLD 100NH 10% Q=34 .095DX.25LG-NOM	28480	9100-2247
A8L4	9100-2268	9		COIL-MLD 22UH 10% Q=45 .095DX.25LG-NOM	28480	9100-2268
A8L5	9100-2268	9		COIL-MLD 22UH 10% Q=45 .095DX.25LG-NOM	28480	9100-2268
A8L6	9100-2247	4		COIL-MLD 100NH 10% Q=34 .095DX.25LG-NOM	28480	9100-2247
A8L7	9100-2268	9		COIL-MLD 22UH 10% Q=45 .095DX.25LG-NOM	28480	9100-2268
A8L8	9100-2268	9		COIL-MLD 22UH 10% Q=45 .095DX.25LG-NOM	28480	9100-2268
A8L9	9100-2268	9		COIL-MLD 22UH 10% Q=45 .095DX.25LG-NOM	28480	9100-2268
A8L10	9100-2247	4		COIL-MLD 100NH 10% Q=34 .095DX.25LG-NOM	28480	9100-2247
A8L11	9100-2268	9		COIL-MLD 22UH 10% Q=45 .095DX.25LG-NOM	28480	9100-2268
A8L12	9100-2268	9		COIL-MLD 22UH 10% Q=45 .095DX.25LG-NOM	28480	9100-2268
A8Q1	1854-0345	8	1	TRANSISTOR NPN 2N5179 SI TO-72 PD=200MW	04713	2N5179
A8Q2	1854-0071	7	1	TRANSISTOR NPN SI PD=300MW FT=200MHZ	28480	1854-0071
A8R1	0698-5174	8	1	RESISTOR 200 5% .125W CC TC=-330/+800	01121	BB2015
A8R2	0698-3376	8	3	RESISTOR 43 5% .125W CC TC=-270/+540	01121	BB4305
A8R3	0698-5172	6	3	RESISTOR 13 5% .125W CC TC=-270/+540	01121	BB1305
A8R4	0698-5996	2	1	RESISTOR 560 5% .125W CC TC=-330/+800	01121	BB5615
A8R5	0698-3376	8		RESISTOR 43 5% .125W CC TC=-270/+540	01121	BB4305
A8R6	0698-5075	8	3	RESISTOR 130 5% .125W CC TC=-330/+800	01121	BB1315
A8R7	0698-3378	0	3	RESISTOR 51 5% .125W CC TC=-270/+540	01121	BB5105
A8R8	0698-3376	8		RESISTOR 43 5% .125W CC TC=-270/+540	01121	BB4305
A8R9	0698-5562	8	1	RESISTOR 120 5% .125W CC TC=-330/+800	01121	BB1215
A8R10	0698-5172	6		RESISTOR 13 5% .125W CC TC=-270/+540	01121	BB1305
A8R11	0698-5075	8		RESISTOR 130 5% .125W CC TC=-330/+800	01121	BB1315
A8R12	0698-5999	5	3	RESISTOR 4.7K 5% .125W CC TC=-350/+857	01121	BB4725
A8R13	0698-5999	5		RESISTOR 4.7K 5% .125W CC TC=-350/+857	01121	BB4725
A8R14	0698-5999	5		RESISTOR 4.7K 5% .125W CC TC=-350/+857	01121	BB4725
A8R15	0698-3378	0		RESISTOR 51 5% .125W CC TC=-270/+540	01121	BB5105
A8R16	0698-7212	9	1	RESISTOR 100 1% .05W F TC=0+-100	24546	C3-1/8-T0-100R-G
A8R17	0698-5172	6		RESISTOR 13 5% .125W CC TC=-270/+540	01121	BB1305
A8R18	0698-5075	8		RESISTOR 130 5% .125W CC TC=-330/+800	01121	BB1315
A8R19	0698-3380	4	1	RESISTOR 75 5% .125W CC TC=-270/+540	01121	BB7505
A8R20	0698-3378	0		RESISTOR 51 5% .125W CC TC=-270/+540	01121	BB5105
A8R21	0698-5426	3	1	RESISTOR 10K 10% .125W CC TC=-350/+857	01121	BB1031
A8R22	2100-2489	9	1	RESISTOR-TRMR 5K 10% C SIDE-ADJ 1-TRN	30983	ET50X502
A8R23	0698-5178	2	1	RESISTOR 1.5K 5% .125W CC TC=-350/+857	01121	BB1525
A8U1	1826-0372	2	1	IC 5 GHZ LIMITER/AMP	28480	1826-0372
				A8 MISCELLANEOUS PARTS		
	0363-0133	0	2	CONTACT-FINGER .13-WD .09-FREE-HGT BE-CU	28480	0363-0133
	0380-0970	9	1	STANDOFF-HEX .375-IN-LG 4-40THD	28480	0380-0970
	05342-20101	3	1	SCREW, GROUND	28480	05342-20101

See introduction to this section for ordering information
*Indicates factory selected value

Table 6-3. Replaceable Parts (Continued)

Reference Designation	HP Part Number	CD	Qty	Description	Mfr Code	Mfr Part Number
A9	05342-60009	4	1	MAIN LOOP AMPLIFIER ASSEMBLY (SERIES 1720)	28480	05342-60009
A9C1	0160-4084	8	2	CAPACITOR-FXD .1UF +-20% 50VDC CER	28480	0160-4084
A9C2	0160-0165	8	1	CAPACITOR-FXD .056UF +-10% 200VDC POLYE	28480	0160-0165
A9C3	0180-0210	6	2	CAPACITOR-FXD 3.3UF+-20% 15VDC TA	56289	150D335X0015A2
A9C4	0160-3879	7	5	CAPACITOR-FXD .01UF +-20% 100VDC CER	28480	0160-3879
A9C5	0160-3879	7		CAPACITOR-FXD .01UF +-20% 100VDC CER	28480	0160-3879
A9C6	0180-1701	2	1	CAPACITOR-FXD 6.8UF+-20% 6VDC TA	56289	150D685X0006A2
A9C7	0160-3879	7		CAPACITOR-FXD .01UF +-20% 100VDC CER	28480	0160-3879
A9C8	0160-0301	4	1	CAPACITOR-FXD .012UF +-10% 200VDC POLYE	28480	0160-0301
A9C9	0160-0153	4	2	CAPACITOR-FXD 1000PF +-10% 200VDC POLYE	28480	0160-0153
A9C10	0160-0160	3	1	CAPACITOR-FXD 8200PF +-10% 200VDC POLYE	28480	0160-0160
A9C11	0160-4084	8		CAPACITOR-FXD .1UF +-20% 50VDC CER	28480	0160-4084
A9C12	0140-0200	0	1	CAPACITOR-FXD 390PF +-5% 300VDC MICA	72136	DM15F391J0300WV1CR
A9C13	0180-0228	6	2	CAPACITOR-FXD 22UF+-10% 15VDC TA	56289	150D226X9015B2
A9C14	0180-0210	6		CAPACITOR-FXD 3.3UF+-20% 15VDC TA	56289	150D335X0015A2
A9C15	0160-3879	7		CAPACITOR-FXD .01UF +-20% 100VDC CER	28480	0160-3879
A9C16	0160-0153	4		CAPACITOR-FXD 1000PF +-10% 200VDC POLYE	28480	0160-0153
A9C17	0180-0228	6		CAPACITOR-FXD 22UF+-10% 15VDC TA	56289	150D226X9015B2
A9C18	0160-0137	4	1	CAPACITOR-FXD .33UF +-20% 25VDC CER	28480	0160-0137
A9C19	0160-3879	7		CAPACITOR-FXD .01UF +-20% 100VDC CER	28480	0160-3879
A9CR1	1902-0049	2	2	DIODE-ZNR 6.19V 5% DO-7 PD=.4W TC=+.022%	28480	1902-0049
A9CR2	1901-0040	1	2	DIODE-SWITCHING 30V 50MA 2NS DO-35	28480	1901-0040
A9CR3	1901-0040	1		DIODE-SWITCHING 30V 50MA 2NS DO-35	28480	1901-0040
A9CR4	1902-0049	2		DIODE-ZNR 6.19V 5% DO-7 PD=.4W TC=+.022%	28480	1902-0049
A9L1	9140-0131	5	3	COIL-MLD 10MH 5% Q=80 .240X.74LG-NOM	28480	9140-0131
A9L2	9140-0131	5		COIL-MLD 10MH 5% Q=80 .240X.74LG-NOM	28480	9140-0131
A9L3	9140-0131	5		COIL-MLD 10MH 5% Q=80 .240X.74LG-NOM	28480	9140-0131
A9Q1	1853-0020	4	3	TRANSISTOR PNP SI PD=300MW FT=150MHZ	28480	1853-0020
A9Q2	1853-0020	4		TRANSISTOR PNP SI PD=300MW FT=150MHZ	28480	1853-0020
A9Q3	1853-0020	4		TRANSISTOR PNP SI PD=300MW FT=150MHZ	28480	1853-0020
A9Q4	1854-0071	7	1	TRANSISTOR NPN SI PD=300MW FT=200MHZ	28480	1854-0071
A9R1	0757-0279	0	2	RESISTOR 3.16K 1% .125W F TC=0+-100	24546	C4-1/8-T0-3161-F
A9R2	0698-6123	9	2	RESISTOR 20K 5% .125W CC TC=-466/+875	01121	BB2035
A9R3	0757-0280	3	3	RESISTOR 1K 1% .125W F TC=0+-100	24546	C4-1/8-T0-1001-F
A9R4	0757-0199	3	3	RESISTOR 21.5K 1% .125W F TC=0+-100	24546	C4-1/8-T0-2152-F
A9R5	0698-5184	0	2	RESISTOR 6.2K 5% .125W CC TC=-350/+857	01121	BB6225
A9R6	0757-0199	3		RESISTOR 21.5K 1% .125W F TC=0+-100	24546	C4-1/8-T0-2152-F
A9R7	0698-6123	9		RESISTOR 20K 5% .125W CC TC=-466/+875	01121	BB2035
A9R8	0698-5184	0		RESISTOR 6.2K 5% .125W CC TC=-350/+857	01121	BB6225
A9R9	0698-3446	3	1	RESISTOR 383 1% .125W F TC=0+-100	24546	C4-1/8-T0-383R-F
A9R10	0757-0279	0		RESISTOR 3.16K 1% .125W F TC=0+-100	24546	C4-1/8-T0-3161-F
A9R11	0757-0280	3		RESISTOR 1K 1% .125W F TC=0+-100	24546	C4-1/8-T0-1001-F
A9R12	0698-3150	6	1	RESISTOR 2.37K 1% .125W F TC=0+-100	24546	C4-1/8-T0-2371-F
A9R13	0757-0290	5	1	RESISTOR 6.19K 1% .125W F TC=0+-100	19701	MF4C1/8-T0-6191-F
A9R14	0757-0199	3		RESISTOR 21.5K 1% .125W F TC=0+-100	24546	C4-1/8-T0-2152-F
A9R15	0757-0418	9	1	RESISTOR 619 1% .125W F TC=0+-100	24546	C4-1/8-T0-619R-F
A9R16*	0683-1065	7	1	RESISTOR 10M 5% .25W FC TC=-900/+1100	01121	CB1065
A9R17	0757-0283	6	2	RESISTOR 2K 1% .125W F TC=0+-100	24546	C4-1/8-T0-2001-F
A9R18	0757-0280	3		RESISTOR 1K 1% .125W F TC=0+-100	24546	C4-1/8-T0-1001-F
A9R19	0757-0283	6		RESISTOR 2K 1% .125W F TC=0+-100	24546	C4-1/8-T0-2001-F
A9U1	1820-1112	8	1	IC FF TTL LS D-TYPE POS-EDGE-TRIG	01295	SN74LS74N
A9U2	1820-0493	6	1	IC OP AMP 8-DIP-P	27014	LM307N
				A9 MISCELLANEOUS PARTS		
	5000-9043	6	1	PIN:P.C. BOARD EXTRACTOR	28480	5000-9043
	5040-6852	3	1	EXTRACTOR, ORANGE	28480	5040-6852
A9TP1	1251-0600	0	1	CONNECTOR-SGL CONT PIN 1.14-MM-BSC-8Z SQ	28480	1251-0600

See introduction to this section for ordering information
*Indicates factory selected value

Table 6-3. Replaceable Parts (Continued)

Reference Designation	HP Part Number	C D	Qty	Description	Mfr Code	Mfr Part Number
A10	05342-60010	7	1	DIVIDE-BY-N ASSEMBLY (SERIES 1720)	28480	05342-60010
A10C1	0180-1701	2	9	CAPACITOR-FXD 6.8UF+-20% 6VDC TA	56289	150D685X0006A2
A10C2	0180-0104	9	1	CAPACITOR-FXD 60UF+-20% 6VDC TA	56289	150D606X000682
A10C3	0180-1701	2		CAPACITOR-FXD 6.8UF+-20% 6VDC TA	56289	150D685X0006A2
A10C4	0160-3878	6	15	CAPACITOR-FXD 1000PF +-20% 100VDC CER	28480	0160-3878
A10C5	0160-3878	6		CAPACITOR-FXD 1000PF +-20% 100VDC CER	28480	0160-3878
A10C6	0160-3878	6		CAPACITOR-FXD 1000PF +-20% 100VDC CER	28480	0160-3878
A10C7	0180-1701	2		CAPACITOR-FXD 6.8UF+-20% 6VDC TA	56289	150D685X0006A2
A10C8	0180-1701	2		CAPACITOR-FXD 6.8UF+-20% 6VDC TA	56289	150D685X0006A2
A10C9	0160-3878	6		CAPACITOR-FXD 1000PF +-20% 100VDC CER	28480	0160-3878
A10C10	0160-3878	6		CAPACITOR-FXD 1000PF +-20% 100VDC CER	28480	0160-3878
A10C11	0160-3875	3	1	CAPACITOR-FXD 22PF +-5% 200VDC CER 0+-30	28480	0160-3875
A10C12	0160-3878	6		CAPACITOR-FXD 1000PF +-20% 100VDC CER	28480	0160-3878
A10C13	0160-3878	6		CAPACITOR-FXD 1000PF +-20% 100VDC CER	28480	0160-3878
A10C14	0160-3878	6		CAPACITOR-FXD 1000PF +-20% 100VDC CER	28480	0160-3878
A10C15	0160-3878	6		CAPACITOR-FXD 1000PF +-20% 100VDC CER	28480	0160-3878
A10C16	0160-3878	6		CAPACITOR-FXD 1000PF +-20% 100VDC CER	28480	0160-3878
A10C17	0160-3878	6		CAPACITOR-FXD 1000PF +-20% 100VDC CER	28480	0160-3878
A10C18	0160-3878	6		CAPACITOR-FXD 1000PF +-20% 100VDC CER	28480	0160-3878
A10C19	0160-3878	6		CAPACITOR-FXD 1000PF +-20% 100VDC CER	28480	0160-3878
A10C20	0160-3878	6		CAPACITOR-FXD 1000PF +-20% 100VDC CER	28480	0160-3878
A10C21	0160-3878	6		CAPACITOR-FXD 1000PF +-20% 100VDC CER	28480	0160-3878
A10L1	9100-2268	9	1	COIL-MLD 22UH 10% Q=45 .095DX.25LG-NOM	28480	9100-2268
A10L2	9100-1788	6	3	CHOKE-WIDE BAND ZMAX=680 OHMS 180 MHZ	02114	VK200 20/48
A10L3	9100-1788	6		CHOKE-WIDE BAND ZMAX=680 OHMS 180 MHZ	02114	VK200 20/48
A10L4	9100-1788	6		CHOKE-WIDE BAND ZMAX=680 OHMS 180 MHZ	02114	VK200 20/48
A10R1	0675-1021	8	2	RESISTOR 1K 10% .125W CC TC=-330/+800	01121	BB1021
A10R2	0698-5996	2	1	RESISTOR 560 5% .125W CC TC=-330/+800	01121	BB5615
A10R3	0698-8073	2	1	RESISTOR 1.6K 5% .125W CC TC=-350/+857	01121	BB1625
A10R4	0698-3114	2	1	RESISTOR 300 5% .125W CC TC=-330/+800	01121	BB3015
A10R5	0698-6242	3	1	RESISTOR 1.2K 5% .125W CC TC=-350/+857	01121	BB1225
A10R6	0698-3380	4	1	RESISTOR 75 5% .125W CC TC=-270/+540	01121	BB7505
A10R7	0698-5177	1	1	RESISTOR 820 5% .125W CC TC=-330/+800	01121	BB8215
A10R8	0698-7101	5	1	RESISTOR 3K 5% .125W CC TC=-350/+857	01121	BB3025
A10R9	0698-5565	1	1	RESISTOR 2.2K 5% .125W CC TC=-350/+857	01121	BB2225
A10R10	0698-3376	8	1	RESISTOR 43 5% .125W CC TC=-270/+540	01121	BB4305
A10R11	0675-1021	8		RESISTOR 1K 10% .125W CC TC=-330/+800	01121	BB1021
A10TP1	1251-0600	0	1	CONNECTOR-SGL CONT PIN 1.14-MM-BSC-SZ SQ	28480	1251-0600
A10U1	1820-1251	6	1	IC CNTR TTL LS DECD ASYNCHRO	01295	SN74LS196N
A10U2	1820-0630	3	1	IC MISC TTL	04713	MC4044P
A10U3	1820-0069	2	1	IC GATE TTL NAND DUAL 4-INP	01295	SN7420N
A10U4	1820-1112	8	1	IC FF TTL LS D-TYPE POS-EDGE-TRIG	01295	SN74LS74N
A10U5	1820-1225	4	1	IC FF ECL D-M/S DUAL	04713	MC10231P
A10U6	1820-0736	0	1	IC CNTR ECL BIN DUAL	28480	1820-0736
A10U7	1820-0693	8	1	IC FF TTL S D-TYPE POS-EDGE-TRIG	01295	SN74S74N
A10U8	1820-1429	0	4	IC CNTR TTL LS DECD SYNCHRO	01295	SN74LS160N
A10U9	1820-1429	0		IC CNTR TTL LS DECD SYNCHRO	01295	SN74LS160N
A10U10	1820-1196	8	3	IC FF TTL LS D-TYPE POS-EDGE-TRIG COM	01295	SN74LS174N
A10U11	1820-1195	7	2	IC FF TTL LS D-TYPE POS-EDGE-TRIG COM	01295	SN74LS175N
A10U12	1820-1888	5	1	IC PRESCR ECL	04713	MC12013L
A10U13	1820-1429	0		IC CNTR TTL LS DECD SYNCHRO	01295	SN74LS160N
A10U14	1820-1429	0		IC CNTR TTL LS DECD SYNCHRO	01295	SN74LS160N
A10U15	1820-1196	8		IC FF TTL LS D-TYPE POS-EDGE-TRIG COM	01295	SN74LS174N
A10U16	1820-1195	7		IC FF TTL LS D-TYPE POS-EDGE-TRIG COM	01295	SN74LS175N
A10U17	1820-1196	8		IC FF TTL LS D-TYPE POS-EDGE-TRIG COM	01295	SN74LS174N
				A10 MISCELLANEOUS PARTS		
	5000-9043	6	1	PIN;P.C. BOARD EXTRACTOR	28480	5000-9043
	5040-6852	3	1	EXTRACTOR, ORANGE	28480	5040-6852

See introduction to this section for ordering information
*Indicates factory selected value

Table 6-3. Replaceable Parts (Continued)

Reference Designation	HP Part Number	C D	Qty	Description	Mfr Code	Mfr Part Number
A11	05342-60011	8	1	IF LIMITER ASSEMBLY (SERIES 1720)	28480	05342-60011
A11C1	0160-3879	7	5	CAPACITOR-FXD .01UF +-20% 100VDC CER	28480	0160-3879
A11C2	0160-3879	7		CAPACITOR-FXD .01UF +-20% 100VDC CER	28480	0160-3879
A11C3	0160-3879	7		CAPACITOR-FXD .01UF +-20% 100VDC CER	28480	0160-3879
A11C4	0160-3879	7		CAPACITOR-FXD .01UF +-20% 100VDC CER	28480	0160-3879
A11C5	0160-3879	7		CAPACITOR-FXD .01UF +-20% 100VDC CER	28480	0160-3879
A11C6	0180-0490	4	2	CAPACITOR-FXD 68UF+-10% 6VDC TA	90201	TDC686K006WLF
A11C7	0180-0490	4		CAPACITOR-FXD 68UF+-10% 6VDC TA	90201	TDC686K006WLF
A11CR1	1901-0535	9	2	DIODE-SCHOTTKY	28480	1901-0535
A11CR2	1901-0535	9		DIODE-SCHOTTKY	28480	1901-0535
A11L1	9100-2247	4	1	COIL-MLD 100NH 10% Q=34 .095DX.25LG-NOM	28480	9100-2247
A11L2	9100-2265	6	2	COIL-MLD 10UH 10% Q=60 .095DX.25LG-NOM	28480	9100-2265
A11L3	9100-2265	6		COIL-MLD 10UH 10% Q=60 .095DX.25LG-NOM	28480	9100-2265
A11R1	2100-3207	1	1	RESISTOR-TRMR 5K 10% C SIDE-ADJ 1-TRN	28480	2100-3207
A11R2	0698-7102	6	1	RESISTOR 5.1K 5% .125W CC TC=-350/+857	01121	BB5125
A11R3	0698-5176	0	1	RESISTOR 510 5% .125W CC TC=-330/+800	01121	BB5115
A11R4	0698-7964	8	1	RESISTOR 100K 5% .125W CC TC=-466/+875	28480	0698-7964
A11R5	0698-3113	1	2	RESISTOR 100 5% .125W CC TC=-270/+540	01121	BB1015
A11R6	0698-5996	2	1	RESISTOR 560 5% .125W CC TC=-330/+800	01121	BB5615
A11R7	0698-3111	9	1	RESISTOR 30 5% .125W CC TC=-270/+540	01121	BB3005
A11R8	0698-7185	5	2	RESISTOR 220K 5% .125W CC TC=-600/+1137	01121	BB2245
A11R9	0698-7185	5		RESISTOR 220K 5% .125W CC TC=-600/+1137	01121	BB2245
A11R10	0698-3113	1		RESISTOR 100 5% .125W CC TC=-270/+540	01121	BB1015
A11R11	0698-7026	3	1	RESISTOR 91 5% .125W CC TC=-270/+540	01121	BB9105
A11R12	0675-1021	5	1	RESISTOR 1K 10% .125W CC TC=-330/+800	01121	BB1021
A11R13	0698-5993	9	1	RESISTOR 8.2K 5% .125W CC TC=-350/+857	01121	BB8225
A11R14	2100-3352	7	1	RESISTOR-TRMR 1K 10% C SIDE-ADJ 1-TRN	28480	2100-3352
A11TP2	1251-0600	0	3	CONNECTOR-SGL CONT PIN 1.14-MM-BSC-BZ SQ	28480	1251-0600
A11TP3	1251-0600	0		CONNECTOR-SGL CONT PIN 1.14-MM-BSC-BZ SQ	28480	1251-0600
A11TP7	1251-0600	0		CONNECTOR-SGL CONT PIN 1.14-MM-BSC-BZ SQ	28480	1251-0600
A11U1	1826-0065	0	1	IC 311 COMPARATOR 8-DIP-P	01295	SN72311P
A11U2	1826-0372	2	1	IC 5 GHZ LIMITER/AMP	28480	1826-0372
				A11 MISCELLANEOUS PARTS		
	5000-9043	6	1	PIN,P.C. BOARD EXTRACTOR	28480	5000-9043
	5040-6852	3	1	EXTRACTOR, ORANGE	28480	5040-6852

See introduction to this section for ordering information
*Indicates factory selected value

Table 6-3. Replaceable Parts (Continued)

Reference Designation	HP Part Number	C D	Qty	Description	Mfr Code	Mfr Part Number
A12	05342-60012	9	1	IF DETECTOR ASSEMBLY (SERIES 1720)	28480	05342-60012
A12C1	0160-3878	6	1	CAPACITOR-FXD 1000PF +-20% 100VDC CER	28480	0160-3878
A12C2	0160-3879	7	12	CAPACITOR-FXD .01UF +-20% 100VDC CER	28480	0160-3879
A12C3	0160-3879	7		CAPACITOR-FXD .01UF +-20% 100VDC CER	28480	0160-3879
A12C4	0160-3879	7		CAPACITOR-FXD .01UF +-20% 100VDC CER	28480	0160-3879
A12C5	0160-2262	0	2	CAPACITOR-FXD 16PF +-5% 500VDC CER 0+-30	28480	0160-2262
A12C6	0160-3877	5	1	CAPACITOR-FXD 100PF +-20% 200VDC CER	28480	0160-3877
A12C7	0160-2262	0		CAPACITOR-FXD 16PF +-5% 500VDC CER 0+-30	28480	0160-2262
A12C8	0160-3879	7		CAPACITOR-FXD .01UF +-20% 100VDC CER	28480	0160-3879
A12C9	0160-3879	7		CAPACITOR-FXD .01UF +-20% 100VDC CER	28480	0160-3879
A12C10	0150-0115	7	1	CAPACITOR-FXD 27PF +-10% 500VDC CER	28480	0150-0115
A12C11	0160-4084	8	1	CAPACITOR-FXD .1UF +-20% 50VDC CER	28480	0160-4084
A12C12	0180-0490	4	3	CAPACITOR-FXD 68UF+-10% 6VDC TA	90201	TDC686K006MLF
A12C13	0160-3879	7		CAPACITOR-FXD .01UF +-20% 100VDC CER	28480	0160-3879
A12C14	0160-3879	7		CAPACITOR-FXD .01UF +-20% 100VDC CER	28480	0160-3879
A12C15	0160-3879	7		CAPACITOR-FXD .01UF +-20% 100VDC CER	28480	0160-3879
A12C16	0160-3879	7		CAPACITOR-FXD .01UF +-20% 100VDC CER	28480	0160-3879
A12C17	0160-3879	7		CAPACITOR-FXD .01UF +-20% 100VDC CER	28480	0160-3879
A12C18	0160-3879	7		CAPACITOR-FXD .01UF +-20% 100VDC CER	28480	0160-3879
A12C19	0160-3879	7		CAPACITOR-FXD .01UF +-20% 100VDC CER	28480	0160-3879
A12C20	0180-0491	5	2	CAPACITOR-FXD 10UF+-20% 25VDC TA	28480	0180-0491
A12C21	0180-0491	5		CAPACITOR-FXD 10UF+-20% 25VDC TA	28480	0180-0491
A12C22	0180-0490	4		CAPACITOR-FXD 68UF+-10% 6VDC TA	90201	TDC686K006MLF
A12C23	0180-0490	4		CAPACITOR-FXD 68UF+-10% 6VDC TA	90201	TDC686K006MLF
A12C24	0160-3872	0	1	CAPACITOR-FXD 2.2PF +-.25PF 200VDC CER	28480	0160-3872
A12C25	0160-3873	1	1	CAPACITOR-FXD 4.7PF +-.5PF 200VDC CER	28480	0160-3873
A12CR1	1901-0535	9	3	DIODE-SCHOTTKY	28480	1901-0535
A12CR2	1901-0535	9		DIODE-SCHOTTKY	28480	1901-0535
A12CR3	1901-0535	9		DIODE-SCHOTTKY	28480	1901-0535
A12CR4	1901-0040	1	1	DIODE-SWITCHING 30V 50MA 2NS DO-35	28480	1901-0040
A12L1	9100-2250	9	2	COIL-MLD 180NH 10% Q=34 .095DX.25LG-NOM	28480	9100-2250
A12L2	9100-2250	9		COIL-MLD 180NH 10% Q=34 .095DX.25LG-NOM	28480	9100-2250
A12L3	9100-2265	6	3	COIL-MLD 10UH 10% Q=60 .095DX.25LG-NOM	28480	9100-2265
A12L4	9100-2265	6		COIL-MLD 10UH 10% Q=60 .095DX.25LG-NOM	28480	9100-2265
A12L5	9100-2265	6		COIL-MLD 10UH 10% Q=60 .095DX.25LG-NOM	28480	9100-2265
A12L6	9100-1788	6	2	CHOKE-WIDE BAND ZMAX=680 OHMS 100 MHZ	02114	VK200 20/4B
A12L7	9100-1788	6		CHOKE-WIDE BAND ZMAX=680 OHMS 100 MHZ	02114	VK200 20/4B
A12Q1	1854-0345	8	1	TRANSISTOR NPN 2N5179 SI TO-72 PD=200MW	04713	2N5179
A12R1	0698-7102	6	2	RESISTOR 5.1K 5% .125W CC TC=-350/+857	01121	BB5125
A12R2	2100-2489	9	2	RESISTOR-TRMR 5K 10% C SIDE-ADJ 1-TRN	30983	ET50X502
A12R3	0698-3111	9	2	RESISTOR 30 5% .125W CC TC=-270/+540	01121	BB3005
A12R4	0698-3457	6	2	RESISTOR 316K 1% .125W F TC=0+-100	28480	0698-3457
A12R5	0757-0402	1	2	RESISTOR 110 1% .125W F TC=0+-100	24546	C4-1/8-T0-111-F
A12R6	0757-0402	1		RESISTOR 110 1% .125W F TC=0+-100	24546	C4-1/8-T0-111-F
A12R7	2100-2574	3	1	RESISTOR-TRMR 500 10% C SIDE-ADJ 1-TRN	30983	ET50X501
A12R8	0698-7026	3	1	RESISTOR 91 5% .125W CC TC=-270/+540	01121	BB9105
A12R9	0698-7964	8	1	RESISTOR 100K 5% .125W CC TC=-466/+675	28480	0698-7964
A12R10	0698-5176	0	1	RESISTOR 510 5% .125W CC TC=-330/+800	01121	BB5115
A12R11	0757-0407	6	1	RESISTOR 200 1% .125W F TC=0+-100	24546	C4-1/8-T0-201-F
A12R12	2100-2489	9		RESISTOR-TRMR 5K 10% C SIDE-ADJ 1-TRN	30983	ET50X502
A12R13	0757-0442	9	1	RESISTOR 10K 1% .125W F TC=0+-100	24546	C4-1/8-T0-1002-F
A12R14	0698-3457	6		RESISTOR 316K 1% .125W F TC=0+-100	28480	0698-3457
A12R15	0757-0397	3	1	RESISTOR 68.1 1% .125W F TC=0+-100	24546	C4-1/8-T0-68R1-F
A12R16	0698-7102	6		RESISTOR 5.1K 5% .125W CC TC=-350/+857	01121	BB5125
A12R17	0698-3380	4	1	RESISTOR 75 5% .125W CC TC=-270/+540	01121	BB7505
A12R18	0698-8368	8	1	RESISTOR 82 5% .125W CC TC=-270/+540	01121	BB8205
A12R19	0698-5174	8	2	RESISTOR 200 5% .125W CC TC=-330/+800	01121	BB2015
A12R20	0698-3381	5	1	RESISTOR 150 5% .125W CC TC=-330/+800	01121	BB1515
A12R21	0698-3111	9		RESISTOR 30 5% .125W CC TC=-270/+540	01121	BB3005
A12R22	0698-5174	8		RESISTOR 200 5% .125W CC TC=-330/+800	01121	BB2015
A12R23	0698-3114	2	2	RESISTOR 300 5% .125W CC TC=-330/+800	01121	BB3015
A12R24	0698-3114	2		RESISTOR 300 5% .125W CC TC=-330/+800	01121	BB3015
A12R25	0675-1021	8	1	RESISTOR 1K 10% .125W CC TC=-330/+800	01121	BB1021
A12TP1	1251-0600	0	11	CONNECTOR-SGL CONT PIN 1.14-MM-BSC-SZ SQ	28480	1251-0600
A12TP2	1251-0600	0		CONNECTOR-SGL CONT PIN 1.14-MM-BSC-SZ SQ	28480	1251-0600
A12TP3	1251-0600	0		CONNECTOR-SGL CONT PIN 1.14-MM-BSC-SZ SQ	28480	1251-0600
A12TP4	1251-0600	0		CONNECTOR-SGL CONT PIN 1.14-MM-BSC-SZ SQ	28480	1251-0600
A12TP5	1251-0600	0		CONNECTOR-SGL CONT PIN 1.14-MM-BSC-SZ SQ	28480	1251-0600
A12TP6	1251-0600	0		CONNECTOR-SGL CONT PIN 1.14-MM-BSC-SZ SQ	28480	1251-0600
A12TP7	1251-0600	0		CONNECTOR-SGL CONT PIN 1.14-MM-BSC-SZ SQ	28480	1251-0600
A12TP8	1251-0600	0		CONNECTOR-SGL CONT PIN 1.14-MM-BSC-SZ SQ	28480	1251-0600
A12TP9	1251-0600	0		CONNECTOR-SGL CONT PIN 1.14-MM-BSC-SZ SQ	28480	1251-0600
A12TP10	1251-0600	0		CONNECTOR-SGL CONT PIN 1.14-MM-BSC-SZ SQ	28480	1251-0600

See introduction to this section for ordering information
*Indicates factory selected value

Table 6-3. Replaceable Parts (Continued)

Reference Designation	HP Part Number	C D	Qty	Description	Mfr Code	Mfr Part Number
A12TP11	1251-0600	0		CONNECTOR-SGL CONT PIN 1.14-MM-BSC-SZ SQ	28480	1251-0600
A12U1	1826-0065	0	1	IC 311 COMPARATOR 8-DIP-P	01295	SN72311P
A12U2	1826-0372	2	2	IC 5 GHZ LIMITER/AMP	28480	1826-0372
A12U3	1820-1225	4	1	IC FF ECL D-M/S DUAL	04713	MC10231P
A12U4	1826-0372	2		IC 5 GHZ LIMITER/AMP	28480	1826-0372
A12U5	1820-0765	5	1	IC CNTR TTL BIN ASYNCHRO NEG-EDGE-TRIG	01295	SN74197N
A12U6	1820-1322	2	1	IC GATE TTL S NOR QUAD 2-INP	01295	SN74802N
A12U7	1820-1197	9	1	IC GATE TTL LS NAND QUAD 2-INP	01295	SN74LS00N
A12U8	1820-1285	6	2	IC GATE TTL LS AND-OR-INV 4-INP	01295	SN74LS54N
A12U9	1820-1285	6		IC GATE TTL LS AND-OR-INV 4-INP	01295	SN74LS54N
A12U10	1820-1193	5	2	IC CNTR TTL LS BIN ASYNCHRO	01295	SN74LS197N
A12U11	1820-0174	0	1	IC INV TTL HEX	01295	SN7404N
A12U12	1820-1255	0	1	IC INV TTL HEX 1-INP	01295	SN74368N
A12U13	1820-1112	8	1	IC FF TTL LS D-TYPE POS-EDGE-TRIG	01295	SN74LS74N
A12U14	1820-1204	9	1	IC GATE TTL LS NAND DUAL 4-INP	01295	SN74LS20N
A12U15	1820-1193	5		IC CNTR TTL LS BIN ASYNCHRO	01295	SN74LS197N
				A12 MISCELLANEOUS PARTS		
	5000-9043	6	1	PINIP.C. BOARD EXTRACTOR	28480	5000-9043
	5040-6852	3	1	EXTRACTOR, ORANGE	28480	5040-6852

See introduction to this section for ordering information
*Indicates factory selected value

Table 6-3. Replaceable Parts (Continued)

Reference Designation	HP Part Number	C D	Qty	Description	Mfr Code	Mfr Part Number
A13	05342-60013	0	1	COUNTER ASSEMBLY (SERIES 1720)	28480	05342-60013
A13C1	0160-3879	7	21	CAPACITOR-FXD .01UF +-20% 100VDC CER	28480	0160-3879
A13C2	0160-3879	7		CAPACITOR-FXD .01UF +-20% 100VDC CER	28480	0160-3879
A13C3	0160-3879	7		CAPACITOR-FXD .01UF +-20% 100VDC CER	28480	0160-3879
A13C4	0160-3879	7		CAPACITOR-FXD .01UF +-20% 100VDC CER	28480	0160-3879
A13C5	0160-3879	7		CAPACITOR-FXD .01UF +-20% 100VDC CER	28480	0160-3879
A13C6	0160-3879	7		CAPACITOR-FXD .01UF +-20% 100VDC CER	28480	0160-3879
A13C7	0160-3879	7		CAPACITOR-FXD .01UF +-20% 100VDC CER	28480	0160-3879
A13C8	0160-3879	7		CAPACITOR-FXD .01UF +-20% 100VDC CER	28480	0160-3879
A13C9	0160-3879	7		CAPACITOR-FXD .01UF +-20% 100VDC CER	28480	0160-3879
A13C10	0160-3879	7		CAPACITOR-FXD .01UF +-20% 100VDC CER	28480	0160-3879
A13C11	0160-3879	7		CAPACITOR-FXD .01UF +-20% 100VDC CER	28480	0160-3879
A13C12	0160-3879	7		CAPACITOR-FXD .01UF +-20% 100VDC CER	28480	0160-3879
A13C13	0160-3879	7		CAPACITOR-FXD .01UF +-20% 100VDC CER	28480	0160-3879
A13C14	0160-3879	7		CAPACITOR-FXD .01UF +-20% 100VDC CER	28480	0160-3879
A13C15	0160-3879	7		CAPACITOR-FXD .01UF +-20% 100VDC CER	28480	0160-3879
A13C16	0160-3879	7		CAPACITOR-FXD .01UF +-20% 100VDC CER	28480	0160-3879
A13C17	0160-3879	7		CAPACITOR-FXD .01UF +-20% 100VDC CER	28480	0160-3879
A13C18	0160-3879	7		CAPACITOR-FXD .01UF +-20% 100VDC CER	28480	0160-3879
A13C19	0160-3879	7		CAPACITOR-FXD .01UF +-20% 100VDC CER	28480	0160-3879
A13C20	0180-1746	5	1	CAPACITOR-FXD 15UF+-10% 20VDC TA	56289	150D156X902082
A13C21	0160-3879	7		CAPACITOR-FXD .01UF +-20% 100VDC CER	28480	0160-3879
A13C22	0180-0106	9	2	CAPACITOR-FXD 60UF+-20% 6VDC TA	56289	150D606X000682
A13C23	0160-3879	7		CAPACITOR-FXD .01UF +-20% 100VDC CER	28480	0160-3879
A13C25	0180-0106	9		CAPACITOR-FXD 60UF+-20% 6VDC TA	56289	150D606X000682
A13CR1	1901-0040	1	2	DIODE-SWITCHING 30V 50MA 2NS DO-35	28480	1901-0040
A13CR2	1901-0040	1		DIODE-SWITCHING 30V 50MA 2NS DO-35	28480	1901-0040
A13L1	9100-1788	6	2	CHOKE-WIDE BAND ZMAX=680 OHMS 180 MHZ	02114	VK200 20/48
A13L2	9100-1788	6		CHOKE-WIDE BAND ZMAX=680 OHMS 180 MHZ	02114	VK200 20/48
A13Q1	1854-0071	7	2	TRANSISTOR NPN SI PD=300MW FT=200MHZ	28480	1854-0071
A13Q2	1854-0071	7		TRANSISTOR NPN SI PD=300MW FT=200MHZ	28480	1854-0071
A13R1	1810-0055	5	2	NETWORK-RES 9-PIN-SIP .15-PIN-SPCG	28480	1810-0055
A13R2	0683-4725	2	6	RESISTOR 4.7K 5% .25W FC TC=-400/+700	01121	CB4725
A13R3	0683-4725	2		RESISTOR 4.7K 5% .25W FC TC=-400/+700	01121	CB4725
A13R4	0683-5115	6	4	RESISTOR 510 5% .25W FC TC=-400/+600	01121	CB5115
A13R5	1810-0055	5		NETWORK-RES 9-PIN-SIP .15-PIN-SPCG	28480	1810-0055
A13R6	0683-2225	3	1	RESISTOR 2.2K 5% .25W FC TC=-400/+700	01121	CB2225
A13R7	0683-4725	2		RESISTOR 4.7K 5% .25W FC TC=-400/+700	01121	CB4725
A13R8	0683-4725	2		RESISTOR 4.7K 5% .25W FC TC=-400/+700	01121	CB4725
A13R9	0683-1025	9	2	RESISTOR 1K 5% .25W FC TC=-400/+600	01121	CB1025
A13R10	0683-1035	1	6	RESISTOR 10K 5% .25W FC TC=-400/+700	01121	CB1035
A13R11	0683-4725	2		RESISTOR 4.7K 5% .25W FC TC=-400/+700	01121	CB4725
A13R12	0683-1635	7	1	RESISTOR 16K 5% .25W FC TC=-400/+800	01121	CB1635
A13R13	0683-6825	7	4	RESISTOR 6.8K 5% .25W FC TC=-400/+700	01121	CB6825
A13R14	0683-2735	0	1	RESISTOR 27K 5% .25W FC TC=-400/+800	01121	CB2735
A13R15	0683-4725	2		RESISTOR 4.7K 5% .25W FC TC=-400/+700	01121	CB4725
A13R16	0683-1035	1		RESISTOR 10K 5% .25W FC TC=-400/+700	01121	CB1035
A13R17	0683-6825	7		RESISTOR 6.8K 5% .25W FC TC=-400/+700	01121	CB6825
A13R18	0683-1035	1		RESISTOR 10K 5% .25W FC TC=-400/+700	01121	CB1035
A13R19	0683-3915	0	1	RESISTOR 390 5% .25W FC TC=-400/+600	01121	CB3915
A13R20	0683-1215	9	1	RESISTOR 120 5% .25W FC TC=-400/+600	01121	CB1215
A13R21	0683-1035	1		RESISTOR 10K 5% .25W FC TC=-400/+700	01121	CB1035
A13R22	0683-2015	9	1	RESISTOR 200 5% .25W FC TC=-400/+600	01121	CB2015
A13R23	0683-3325	6	1	RESISTOR 3.3K 5% .25W FC TC=-400/+700	01121	CB3325
A13R24	0683-5125	8	1	RESISTOR 5.1K 5% .25W FC TC=-400/+700	01121	CB5125
A13R25	0683-6825	7		RESISTOR 6.8K 5% .25W FC TC=-400/+700	01121	CB6825
A13R26	0683-6825	7		RESISTOR 6.8K 5% .25W FC TC=-400/+700	01121	CB6825
A13R27	0683-1035	1		RESISTOR 10K 5% .25W FC TC=-400/+700	01121	CB1035
A13R28	0683-1035	1		RESISTOR 10K 5% .25W FC TC=-400/+700	01121	CB1035
A13R29	0683-1315	0	1	RESISTOR 130 5% .25W FC TC=-400/+600	01121	CB1315
A13R30	0683-5115	6		RESISTOR 510 5% .25W FC TC=-400/+600	01121	CB5115
A13R31	0683-3315	4	1	RESISTOR 330 5% .25W FC TC=-400/+600	01121	CB3315
A13R32	0683-1025	9		RESISTOR 1K 5% .25W FC TC=-400/+600	01121	CB1025
A13R33	0683-5115	6		RESISTOR 510 5% .25W FC TC=-400/+600	01121	CB5115
A13R34	0683-5115	6		RESISTOR 510 5% .25W FC TC=-400/+600	01121	CB5115
A13TP1	1251-0600	0	8	CONNECTOR-SGL CONT PIN 1.14-MM-BSC-SZ SQ	28480	1251-0600
A13TP2	1251-0600	0		CONNECTOR-SGL CONT PIN 1.14-MM-BSC-SZ SQ	28480	1251-0600
A13TP3	1251-0600	0		CONNECTOR-SGL CONT PIN 1.14-MM-BSC-SZ SQ	28480	1251-0600
A13TP4	1251-0600	0		CONNECTOR-SGL CONT PIN 1.14-MM-BSC-SZ SQ	28480	1251-0600
A13TP5	1251-0600	0		CONNECTOR-SGL CONT PIN 1.14-MM-BSC-SZ SQ	28480	1251-0600

See introduction to this section for ordering information
*Indicates factory selected value

Table 6-3. Replaceable Parts (Continued)

Reference Designation	HP Part Number	C D	Qty	Description	Mfr Code	Mfr Part Number
A13TP6	1251-0600	0		CONNECTOR-SGL CONT PIN 1.14-MM-BSC-SZ SQ	28480	1251-0600
A13TP7	1251-0600	0		CONNECTOR-SGL CONT PIN 1.14-MM-BSC-SZ SQ	28480	1251-0600
A13TP8	1251-0600	0		CONNECTOR-SGL CONT PIN 1.14-MM-BSC-SZ SQ	28480	1251-0600
A13U1	1820-0634	7	2	IC CNTR MOS DECD	28480	1820-0634
A13U2	1820-0634	7		IC CNTR MOS DECD	28480	1820-0634
A13U3	1820-1199	1	2	IC INV TTL LS HEX 1-INP	01295	SN74LS04N
A13U4	1820-1112	8	1	IC FF TTL LS D-TYPE POS-EDGE-TRIG	01295	SN74LS74N
A13U5	1820-1238	9	4	IC MUXR/DATA-SEL TTL LS 4-TO-1-LINE DUAL	01295	SN74LS253N
A13U6	1820-1238	9		IC MUXR/DATA-SEL TTL LS 4-TO-1-LINE DUAL	01295	SN74LS253N
A13U7	1820-1199	1		IC INV TTL LS HEX 1-INP	01295	SN74LS04N
A13U8	1820-1197	9	1	IC GATE TTL LS NAND QUAD 2-INP	01295	SN74LS00N
A13U9	1820-1238	9		IC MUXR/DATA-SEL TTL LS 4-TO-1-LINE DUAL	01295	SN74LS253N
A13U10	1820-1238	9		IC MUXR/DATA-SEL TTL LS 4-TO-1-LINE DUAL	01295	SN74LS253N
A13U11	1820-1950	2	1	IC GATE ECL OR-NOR 3-INP	04713	MC10212P
A13U12	1820-1225	4	2	IC FF ECL D-M/S DUAL	04713	MC10231P
A13U13	1820-1251	6	4	IC CNTR TTL LS DECD ASYNCHRO	01295	SN74LS196N
A13U14	1820-1251	6		IC CNTR TTL LS DECD ASYNCHRO	01295	SN74LS196N
A13U15	1820-1052	5	1	IC XLTR ECL/TTL ECL-TO-TTL QUAD 2-INP	04713	MC10125L
A13U16	1820-1225	4		IC FF ECL D-M/S DUAL	04713	MC10231P
A13U17	1820-1251	6		IC CNTR TTL LS DECD ASYNCHRO	01295	SN74LS196N
A13U18	1820-1251	6		IC CNTR TTL LS DECD ASYNCHRO	01295	SN74LS196N
				A13 MISCELLANEOUS PARTS		
	5000-9043	6	1	PIN:P.C. BOARD EXTRACTOR	28480	5000-9043
	5040-6852	3	1	EXTRACTOR, ORANGE	28480	5040-6852

See introduction to this section for ordering information
*Indicates factory selected value

Table 6-3. Replaceable Parts (Continued)

Reference Designation	HP Part Number	C D	Qty	Description	Mfr Code	Mfr Part Number
A14	05342-60014	1	1	PROCESSOR ASSEMBLY (SERIES 1840)	28480	05342-60014
A14C1	0160-3879	7	13	CAPACITOR-FXD .01UF +-20% 100VDC CER	28480	0160-3879
A14C2	0160-3879	7		CAPACITOR-FXD .01UF +-20% 100VDC CER	28480	0160-3879
A14C3	0160-3879	7		CAPACITOR-FXD .01UF +-20% 100VDC CER	28480	0160-3879
A14C4	0160-3879	7		CAPACITOR-FXD .01UF +-20% 100VDC CER	28480	0160-3879
A14C5	0180-0106	9	2	CAPACITOR-FXD 60UF+-20% 6VDC TA	56289	150D606X000B2
A14C6	0160-3879	7		CAPACITOR-FXD .01UF +-20% 100VDC CER	28480	0160-3879
A14C7	0160-3879	7		CAPACITOR-FXD .01UF +-20% 100VDC CER	28480	0160-3879
A14C8	0160-3879	7		CAPACITOR-FXD .01UF +-20% 100VDC CER	28480	0160-3879
A14C9	0160-3879	7		CAPACITOR-FXD .01UF +-20% 100VDC CER	28480	0160-3879
A14C10	0160-3879	7		CAPACITOR-FXD .01UF +-20% 100VDC CER	28480	0160-3879
A14C11	0160-3879	7		CAPACITOR-FXD .01UF +-20% 100VDC CER	28480	0160-3879
A14C12	0160-3879	7		CAPACITOR-FXD .01UF +-20% 100VDC CER	28480	0160-3879
A14C13	0160-3879	7		CAPACITOR-FXD .01UF +-20% 100VDC CER	28480	0160-3879
A14C14	0160-2743	2	4	CAPACITOR-FXD 33PF +-10% 200VDC CER	28480	0160-2743
A14C15	0160-2743	2		CAPACITOR-FXD 33PF +-10% 200VDC CER	28480	0160-2743
A14C16	0160-2743	2		CAPACITOR-FXD 33PF +-10% 200VDC CER	28480	0160-2743
A14C20	0160-3879	7		CAPACITOR-FXD .01UF +-20% 100VDC CER	28480	0160-3879
A14C21	0160-3651	3	2	CAPACITOR-FXD 68PF +-10% 200VDC CER	28480	0160-3651
A14C22	0180-0106	9		CAPACITOR-FXD 60UF+-20% 6VDC TA	56289	150D606X000B2
A14C23	0160-3651	3		CAPACITOR-FXD 68PF +-10% 200VDC CER	28480	0160-3651
A14C24	0160-2743	2		CAPACITOR-FXD 33PF +-10% 200VDC CER	28480	0160-2743
A14C25				NOT ASSIGNED		
A14C26	0160-3878	6	2	CAPACITOR-FXD 1000PF +-20% 100VDC CER	28480	0160-3878
A14C27	0160-0571	0	1	CAPACITOR-FXD 470PF +-20% 100VDC CER	28480	0160-0571
A14C28	0160-3878	6		CAPACITOR-FXD 1000PF +-20% 100VDC CER	28480	0160-3878
A14CR1	1901-0040	1	3	DIODE-SWITCHING 30V 50MA 2NS DO-35	28480	1901-0040
A14CR2	1901-0040	1		DIODE-SWITCHING 30V 50MA 2NS DO-35	28480	1901-0040
A14CR3	1901-0040	1		DIODE-SWITCHING 30V 50MA 2NS DO-35	28480	1901-0040
A14L1	9100-1788	6	1	CHOKE-WIDE BAND ZMAX=680 OHMS 180 MHZ	02114	VK200 20/4B
A14Q1	1854-0574	5	1	TRANSISTOR NPN SI PD=500MW FT=125MHZ	28480	1854-0574
A14R1	0698-5426	3	4	RESISTOR 10K 1% .125W CC TC=-350/+857	01121	BB1031
A14R2	1810-0055	5	2	NETWORK-RES 9-PIN-SIP .15-PIN-SPCG	28480	1810-0055
A14R3	0698-7027	4	1	RESISTOR 10M 1% .125W CC TC=-666/+1262	01121	BB1061
A14R4	1810-0164	7	1	NETWORK-RES 9-PIN-SIP .15-PIN-SPCG	28480	1810-0164
A14R5	0698-5426	3		RESISTOR 10K 1% .125W CC TC=-350/+857	01121	BB1031
A14R6	1810-0055	5		NETWORK-RES 9-PIN-SIP .15-PIN-SPCG	28480	1810-0055
A14R7	0698-5999	5	4	RESISTOR 4.7K 5% .125W CC TC=-350/+857	01121	BB4725
A14R8	0698-5999	5		RESISTOR 4.7K 5% .125W CC TC=-350/+857	01121	BB4725
A14R9	0675-1021	8	5	RESISTOR 1K 10% .125W CC TC=-330/+800	01121	BB1021
A14R10	0675-1021	8		RESISTOR 1K 10% .125W CC TC=-330/+800	01121	BB1021
A14R11	0698-5999	5		RESISTOR 4.7K 5% .125W CC TC=-350/+857	01121	BB4725
A14R12	0698-8127	7	2	RESISTOR 22 5% .125W CC TC=-270/+540	01121	BB2205
A14R13	0675-1021	8		RESISTOR 1K 10% .125W CC TC=-330/+800	01121	BB1021
A14R14	0698-6283	2	2	RESISTOR 10 5% .125W CC TC=-120/+400	01121	BB1005
A14R15	0698-5426	3		RESISTOR 10K 1% .125W CC TC=-350/+857	01121	BB1031
A14R16	0698-8127	7		RESISTOR 22 5% .125W CC TC=-270/+540	01121	BB2205
A14R17	0675-1021	8		RESISTOR 1K 10% .125W CC TC=-330/+800	01121	BB1021
A14R18	0698-6283	2		RESISTOR 10 5% .125W CC TC=-120/+400	01121	BB1005
A14R19	0698-5999	5		RESISTOR 4.7K 5% .125W CC TC=-350/+857	01121	BB4725
A14R20	0698-5426	3		RESISTOR 10K 1% .125W CC TC=-350/+857	01121	BB1031
A14R21	0698-5180	6	1	RESISTOR 2K 5% .125W CC TC=-350/+857	01121	BB2025
A14R22				NOT ASSIGNED		
A14R23	0698-5562	8	1	RESISTOR 120 5% .125W CC TC=-330/+800	01121	BB1215
A14R24	0675-1021	8		RESISTOR 1K 10% .125W CC TC=-330/+800	01121	BB1021
A14S1	3101-1856	5	1	SWITCH-SL 8-1A-NS DIP-SLIDE-ASSY .1A	28480	3101-1856
A14S2	3101-1841	8	1	SWITCH-SL 4-1A-NS DIP-SLIDE-ASSY .1A	28480	3101-1841
A14TP1	1251-0600	0	6	CONNECTOR-SGL CONT PIN 1.14-MM-BSC-SZ BO	28480	1251-0600
A14TP2	1251-0600	0		CONNECTOR-SGL CONT PIN 1.14-MM-BSC-SZ BO	28480	1251-0600
A14TP3	1251-0600	0		CONNECTOR-SGL CONT PIN 1.14-MM-BSC-SZ BO	28480	1251-0600
A14TP4	1251-0600	0		CONNECTOR-SGL CONT PIN 1.14-MM-BSC-SZ BO	28480	1251-0600
A14TP5	1251-0600	0		CONNECTOR-SGL CONT PIN 1.14-MM-BSC-SZ BO	28480	1251-0600
A14TP6	1251-0600	0		CONNECTOR-SGL CONT PIN 1.14-MM-BSC-SZ BO	28480	1251-0600
A14U1	1818-0698	8	1	IC ROM MOS 2K X 8	28480	1818-0698
A14U2	1820-1081	0	2	IC DRVR TTL BUS DRVR QUAD 1-INP	18324	N8T26B
A14U3	1820-1081	0		IC DRVR TTL BUS DRVR QUAD 1-INP	18324	N8T26B
A14U4	1818-0697	7	1		28480	1818-0697
A14U5	1820-1197	9	2	IC GATE TTL LS NAND QUAD 2-INP	01295	SN74LS00N

See introduction to this section for ordering information
*Indicates factory selected value

Table 6-3. Replaceable Parts (Continued)

Reference Designation	HP Part Number	C D	Qty	Description	Mfr Code	Mfr Part Number
A14U6	1820-1144	6	1	IC GATE TTL LS NOR QUAD 2-INP	01295	SN74LS02N
A14U7	1818-0706	9	1	IC ROM MOS 3K X 8	28480	1818-0706
A14U8	1820-1255	0	1	IC INV TTL HEX 1-INP	01295	SN74368N
A14U9	1820-1202	7	1	IC GATE TTL LS NAND TPL 3-INP	01295	SN74LS10N
A14U10	1820-1199	1	3	IC INV TTL LS HEX 1-INP	01295	SN74LS04N
A14U11	1820-1425	6	1	IC SCHMITT-TRIG TTL LS NAND QUAD 2-INP	01295	SN74LS132N
A14U12	1818-0135	8	1	IC NMOS 1K RAM STAT 360-NS 3-S	04713	MCM68A10L
A14U13	1820-1208	3	1	IC GATE TTL LS OR QUAD 2-INP	01295	SN74LS32N
A14U14	1820-1240	3	2	IC DCDR TTL S 3-TO-8-LINE 3-INP	01295	SN748138N
A14U15	1820-1199	1		IC INV TTL LS HEX 1-INP	01295	SN74LS04N
A14U16	1820-1368	6	2	IC DRVR TTL BUS DRVR HEX 1-INP	01295	SN74366N
A14U17	1820-1072	9	1	IC DCDR TTL S 2-TO-4-LINE DUAL 2-INP	01295	SN748139N
A14U18	1820-1368	6		IC DRVR TTL BUS DRVR HEX 1-INP	01295	SN74366N
A14U19	1820-1112	8	1	IC FF TTL LS D-TYPE POS-EDGE-TRIG	01295	SN74LS74N
A14U20	1820-1240	3		IC DCDR TTL S 3-TO-8-LINE 3-INP	01295	SN748138N
A14U21	1820-1480	3	1	IC MICPROC NMOS 8-BIT	04713	MC6800L
A14U22	1820-1197	9		IC GATE TTL LS NAND QUAD 2-INP	01295	SN74LS00N
A14U23	1820-1804	5	1	IC DRVR CLOCK DRVR	04713	MPQ6842
A14U24	1820-1199	1		IC INV TTL LS HEX 1-INP	01295	SN74LS04N
				A14 MISCELLANEOUS PARTS		
	1200-0552	4	1	SOCKET-IC 40-CONT DIP-SLDR	28480	1200-0552
	5000-9043	6	1	PIN;P.C. BOARD EXTRACTOR	28480	5000-9043
	5040-6852	3	1	EXTRACTOR, ORANGE	28480	5040-6852
A15				(SEE TABLE 6-8, OPTION 011)		
A16				(SEE TABLE 6-5, OPTION 002) OR TABLE 6-6, OPTION 003)		

See introduction to this section for ordering information
*Indicates factory selected value

Table 6-3. Replaceable Parts (Continued)

Reference Designation	HP Part Number	C D	Qty	Description	Mfr Code	Mfr Part Number
A17	05342-60017	4	1	TIMING GENERATOR (SERIES 1720)	28480	05342-60017
A17C1	0160-3879	7	26	CAPACITOR-FXD .01UF +-20% 100VDC CER	28480	0160-3879
A17C2	0160-3879	7		CAPACITOR-FXD .01UF +-20% 100VDC CER	28480	0160-3879
A17C3	0160-3879	7		CAPACITOR-FXD .01UF +-20% 100VDC CER	28480	0160-3879
A17C4	0160-3879	7		CAPACITOR-FXD .01UF +-20% 100VDC CER	28480	0160-3879
A17C5	0160-3879	7		CAPACITOR-FXD .01UF +-20% 100VDC CER	28480	0160-3879
A17C6	0160-3879	7		CAPACITOR-FXD .01UF +-20% 100VDC CER	28480	0160-3879
A17C7	0160-3879	7		CAPACITOR-FXD .01UF +-20% 100VDC CER	28480	0160-3879
A17C8	0160-3879	7		CAPACITOR-FXD .01UF +-20% 100VDC CER	28480	0160-3879
A17C9	0160-3879	7		CAPACITOR-FXD .01UF +-20% 100VDC CER	28480	0160-3879
A17C10	0160-3879	7		CAPACITOR-FXD .01UF +-20% 100VDC CER	28480	0160-3879
A17C11	0160-3879	7		CAPACITOR-FXD .01UF +-20% 100VDC CER	28480	0160-3879
A17C12	0160-3879	7		CAPACITOR-FXD .01UF +-20% 100VDC CER	28480	0160-3879
A17C13	0160-3879	7		CAPACITOR-FXD .01UF +-20% 100VDC CER	28480	0160-3879
A17C14	0160-3879	7		CAPACITOR-FXD .01UF +-20% 100VDC CER	28480	0160-3879
A17C15	0160-3879	7		CAPACITOR-FXD .01UF +-20% 100VDC CER	28480	0160-3879
A17C16	0180-0291	3	1	CAPACITOR-FXD 1UF+-10% 35VDC TA	56289	150D105X9035A2
A17C17	0160-3879	7		CAPACITOR-FXD .01UF +-20% 100VDC CER	28480	0160-3879
A17C18	0180-0106	9	3	CAPACITOR-FXD 60UF+-20% 6VDC TA	56289	150D606X0006B2
A17C19	0160-3879	7		CAPACITOR-FXD .01UF +-20% 100VDC CER	28480	0160-3879
A17CR1	1902-3182	0	1	DIODE-ZNR 12.1V 5% DO-7 PD=.4W TC=+.064%	28480	1902-3182
A17Q1	1854-0560	9	1	TRANSISTOR NPN SI DARL PD=310MW	04713	SP36740
A17Q2	1853-0036	2	1	TRANSISTOR PNP SI PD=310MW FT=250MHZ	28480	1853-0036
A17R1	0683-1035	1	2	RESISTOR 10K 5% .25W FC TC=-400/+700	01121	CB1035
A17R2	0698-5174	8	1	RESISTOR 200 5% .125W CC TC=-330/+800	01121	BB2015
A17R3	0698-5426	3	5	RESISTOR 10K 10% .125W CC TC=-350/+857	01121	BB1031
A17R4	0698-5426	3		RESISTOR 10K 10% .125W CC TC=-350/+857	01121	BB1031
A17R5	0698-5426	3		RESISTOR 10K 10% .125W CC TC=-350/+857	01121	BB1031
A17R6	0698-5426	3		RESISTOR 10K 10% .125W CC TC=-350/+857	01121	BB1031
A17R7	0675-1021	8	3	RESISTOR 1K 10% .125W CC TC=-330/+800	01121	BB1021
A17R8	0675-1021	8		RESISTOR 1K 10% .125W CC TC=-330/+800	01121	BB1021
A17R9	0698-7102	6	4	RESISTOR 5.1K 5% .125W CC TC=-350/+857	01121	BB5125
A17R10	0698-5181	7	7	RESISTOR 3.6K 5% .125W CC TC=-350/+857	01121	BB3625
A17R11	0698-7102	6		RESISTOR 5.1K 5% .125W CC TC=-350/+857	01121	BB5125
A17R12	0698-5566	2	4	RESISTOR 2.4K 5% .125W CC TC=-350/+857	01121	BB2425
A17R13	0698-7102	6		RESISTOR 5.1K 5% .125W CC TC=-350/+857	01121	BB5125
A17R14	0698-5181	7		RESISTOR 3.6K 5% .125W CC TC=-350/+857	01121	BB3625
A17R15	0698-5566	2		RESISTOR 2.4K 5% .125W CC TC=-350/+857	01121	BB2425
A17R16	0698-5426	3		RESISTOR 10K 10% .125W CC TC=-350/+857	01121	BB1031
A17R17	0698-5181	7		RESISTOR 3.6K 5% .125W CC TC=-350/+857	01121	BB3625
A17R18	0698-5566	2		RESISTOR 2.4K 5% .125W CC TC=-350/+857	01121	BB2425
A17R19	0698-7097	8	1	RESISTOR 1M 5% .125W CC TC=-600/+1137	01121	BB1055
A17R20	0698-5994	0	1	RESISTOR 6.8K 5% .125W CC TC=-350/+857	01121	BB6825
A17R21	0675-1021	8		RESISTOR 1K 10% .125W CC TC=-330/+800	01121	BB1021
A17R22	0698-5999	5	2	RESISTOR 4.7K 5% .125W CC TC=-350/+857	01121	BB4725
A17R23	0698-5999	5		RESISTOR 4.7K 5% .125W CC TC=-350/+857	01121	BB4725
A17R24	0683-1035	1		RESISTOR 10K 5% .25W FC TC=-400/+700	01121	CB1035
A17R25	0698-5566	2		RESISTOR 2.4K 5% .125W CC TC=-350/+857	01121	BB2425
A17R26	0698-5181	7		RESISTOR 3.6K 5% .125W CC TC=-350/+857	01121	BB3625
A17R27	0698-7102	6		RESISTOR 5.1K 5% .125W CC TC=-350/+857	01121	BB5125
A17TP1	1251-0600	0	11	CONNECTOR-SGL CONT PIN 1.14-MM-BSC-BZ SQ	28480	1251-0600
A17TP2	1251-0600	0		CONNECTOR-SGL CONT PIN 1.14-MM-BSC-BZ SQ	28480	1251-0600
A17TP3	1251-0600	0		CONNECTOR-SGL CONT PIN 1.14-MM-BSC-BZ SQ	28480	1251-0600
A17TP4	1251-0600	0		CONNECTOR-SGL CONT PIN 1.14-MM-BSC-BZ SQ	28480	1251-0600
A17TP5	1251-0600	0		CONNECTOR-SGL CONT PIN 1.14-MM-BSC-BZ SQ	28480	1251-0600
A17TP6	1251-0600	0		CONNECTOR-SGL CONT PIN 1.14-MM-BSC-BZ SQ	28480	1251-0600
A17TP7	1251-0600	0		CONNECTOR-SGL CONT PIN 1.14-MM-BSC-BZ SQ	28480	1251-0600
A17TP8	1251-0600	0		CONNECTOR-SGL CONT PIN 1.14-MM-BSC-BZ SQ	28480	1251-0600
A17TP9	1251-0600	0		CONNECTOR-SGL CONT PIN 1.14-MM-BSC-BZ SQ	28480	1251-0600
A17TP10	1251-0600	0		CONNECTOR-SGL CONT PIN 1.14-MM-BSC-BZ SQ	28480	1251-0600
A17U1	1820-1430	3	2	IC CNTR TTL LS BIN SYNCHRO POS-EDGE-TRIG	01295	SN74LS161N
A17U2	1820-1430	3		IC CNTR TTL LS BIN SYNCHRO POS-EDGE-TRIG	01295	SN74LS161N
A17U3	1820-1197	9	5	IC GATE TTL LS NAND QUAD 2-INP	01295	SN74L800N
A17U4	1820-1433	6	3	IC SHF-RGTR TTL LS R=8 SERIAL-IN PRL-OUT	01295	SN74LS164N
A17U5	1820-1433	6		IC SHF-RGTR TTL LS R=8 SERIAL-IN PRL-OUT	01295	SN74LS164N
A17U6	1820-1211	8	1	IC GATE TTL LS EXCL-OR QUAD 2-INP	01295	SN74LS86N
A17U7	1820-1433	6		IC SHF-RGTR TTL LS R=8 SERIAL-IN PRL-OUT	01295	SN74LS164N
A17U8	1820-1197	9		IC GATE TTL LS NAND QUAD 2-INP	01295	SN74L800N
A17U9	1820-1112	8	2	IC FF TTL LS D-TYPE POS-EDGE-TRIG	01295	SN74LS74N
A17U10	1820-1202	7	1	IC GATE TTL LS NAND TPL 3-INP	01295	SN74LS10N

See introduction to this section for ordering information
*Indicates factory selected value

Table 6-3. Replaceable Parts (Continued)

Reference Designation	HP Part Number	C D	Qty	Description	Mfr Code	Mfr Part Number
A17U11	1820-1442	7	1	IC CNTR TTL LS DECD ASYNCHRO	01295	SN74LS290N
A17U12	1820-1197	9		IC GATE TTL LS NAND QUAD 2-INP	01295	SN74LS00N
A17U13	1820-1197	9		IC GATE TTL LS NAND QUAD 2-INP	01295	SN74LS00N
A17U14	1820-1197	9		IC GATE TTL LS NAND QUAD 2-INP	01295	SN74LS00N
A17U15	1820-1112	8		IC FF TTL LS D-TYPE POS-EDGE-TRIG	01295	SN74LS74N
A17U16	1820-1180	0	1	IC CNTR MOS	50088	MK5009P
A17U17	1820-1225	4	1	IC FF ECL D-M/S DUAL	04713	MC10231P
A17U18	1820-1254	9	1	IC BFR TTL NON-INV HEX 1-INP	27014	DM8095N
A17U19	1820-1196	8	1	IC FF TTL LS D-TYPE POS-EDGE-TRIG COM	01295	SN74LS174N
A17U20	1820-1255	0	1	IC INV TTL HEX 1-INP	01295	SN74368N
				A17 MISCELLANEOUS PARTS		
	5000-9043	6	2	PIN;P.C. BOARD EXTRACTOR	28480	5000-9043
	5040-6852	3	2	EXTRACTOR, ORANGE	28480	5040-6852

See introduction to this section for ordering information
*Indicates factory selected value

Table 6-3. Replaceable Parts (Continued)

Reference Designation	HP Part Number	C D	Qty	Description	Mfr Code	Mfr Part Number
A18	05342-60018	5	1	TIME BASE BUFFER ASSEMBLY (SERIES 1720)	28480	05342-60018
A18C1	0180-0106	9		CAPACITOR-FXD 60UF+-20% 6VDC TA	56289	150D606X000682
A18C2	0160-3879	7		CAPACITOR-FXD .01UF +-20% 100VDC CER	28480	0160-3879
A18C3	0160-3879	7		CAPACITOR-FXD .01UF +-20% 100VDC CER	28480	0160-3879
A18C4	0180-0106	9		CAPACITOR-FXD 60UF+-20% 6VDC TA	56289	150D606X000682
A18C5	0160-3879	7		CAPACITOR-FXD .01UF +-20% 100VDC CER	28480	0160-3879
A18C6	0160-3879	7		CAPACITOR-FXD .01UF +-20% 100VDC CER	28480	0160-3879
A18C7	0160-3879	7		CAPACITOR-FXD .01UF +-20% 100VDC CER	28480	0160-3879
A18C8	0160-3879	7		CAPACITOR-FXD .01UF +-20% 100VDC CER	28480	0160-3879
A18C9	0180-1714	7	2	CAPACITOR-FXD 330UF+-10% 6VDC TA	56289	150D337X900682
A18C10	0160-3879	7		CAPACITOR-FXD .01UF +-20% 100VDC CER	28480	0160-3879
A18C11	0160-3879	7		CAPACITOR-FXD .01UF +-20% 100VDC CER	28480	0160-3879
A18C12	0160-3879	7		CAPACITOR-FXD .01UF +-20% 100VDC CER	28480	0160-3879
A18C13	0180-1714	7		CAPACITOR-FXD 330UF+-10% 6VDC TA	56289	150D337X900682
A18CR1	1901-0040	1	2	DIODE-SWITCHING 30V 50MA 2NS DO-35	28480	1901-0040
A18CR2	1901-0040	1		DIODE-SWITCHING 30V 50MA 2NS DO-35	28480	1901-0040
A18L1	9140-0179	1	3	COIL-MLD 22UH 10% Q=75 .155DX.375LG-NOM	28480	9140-0179
A18L2	9140-0179	1		COIL-MLD 22UH 10% Q=75 .155DX.375LG-NOM	28480	9140-0179
A18L3	9140-0179	1		COIL-MLD 22UH 10% Q=75 .155DX.375LG-NOM	28480	9140-0179
A18R1	0698-5178	2	2	RESISTOR 1.5K 5% .125W CC TC=-350/+857	01121	BB1525
A18R2	0698-5181	7		RESISTOR 3.6K 5% .125W CC TC=-350/+857	01121	BB3625
A18R3	0698-5178	2		RESISTOR 1.5K 5% .125W CC TC=-350/+857	01121	BB1525
A18R4	0698-5181	7		RESISTOR 3.6K 5% .125W CC TC=-350/+857	01121	BB3625
A18R5	0698-3113	1	1	RESISTOR 100 5% .125W CC TC=-270/+540	01121	BB1015
A18R6	0698-5181	7		RESISTOR 3.6K 5% .125W CC TC=-350/+857	01121	BB3625
A18TP1	1251-0600	0		CONNECTOR-SGL CONT PIN 1.14-MM-BSC-SZ SQ	28480	1251-0600
A18U1	1820-0693	8	1	IC FF TTL S D-TYPE POS-EDGE-TRIG	01295	SN74S74N
A18U2	1820-1251	6	2	IC CNTR TTL LS DECD ASYNCHRO	01295	SN74LS196N
A18U3	1820-1251	6		IC CNTR TTL LS DECD ASYNCHRO	01295	SN74LS196N
A18U4	1820-1074	1	1	IC DRVR TTL NOR QUAD 2-INP	01295	SN74128N
A18U5	1820-1056	9	1	IC SCHMITT-TRIG TTL NAND QUAD 2-INP	01295	SN74132N
				A18 MISCELLANEOUS PARTS		
	5000-9043	6		PIN;P.C. BOARD EXTRACTOR	28480	5000-9043
	5040-6852	3		EXTRACTOR, ORANGE	28480	5040-6852

See introduction to this section for ordering information
*Indicates factory selected value

Table 6-3. Replaceable Parts (Continued)

Reference Designation	HP Part Number	C D	Qty	Description	Mfr Code	Mfr Part Number
A19	05342-60019	6	1	PRIMARY POWER ASSEMBLY (SERIES 1720)	28480	05342-60019
A19C1	0180-2802	6	2	CAPACITOR-FXD 140UF+50-10% 250VDC AL	56289	39D147F250MP4
A19C2	0180-2802	6		CAPACITOR-FXD 140UF+50-10% 250VDC AL	56289	39D147F250MP4
A19C3	0160-2216	4	1	CAPACITOR-FXD 820PF +-5% 300VDC MICA	28480	0160-2216
A19C4	0180-1975	2	2	CAPACITOR-FXD 4UF+50-10% 350VDC AL	56289	39D405F350EE4
A19C5	0180-1975	2		CAPACITOR-FXD 4UF+50-10% 350VDC AL	56289	39D405F350EE4
A19C6	0180-0106	9	2	CAPACITOR-FXD 60UF+-20% 6VDC TA	56289	150D606X0006B2
A19C7	0180-0106	9		CAPACITOR-FXD 60UF+-20% 6VDC TA	56289	150D606X0006B2
A19CR1	1906-0069	4	1	DIODE-FW BRDG 400V 1A	28480	1906-0069
A19CR2	1990-0543	6	1	OPTO-ISOLATOR LED-PxSTR IF=150MA-MAX	28480	1990-0543
A19D81	2140-0018	0	2	LAMP-GLOW A9A-C 90/58VDC 700UA T-2-BULB	00466	AGA-C
A19D82	2140-0018	0		LAMP-GLOW A9A-C 90/58VDC 700UA T-2-BULB	00466	AGA-C
A19Q1	1854-0311	8	2	TRANSISTOR NPN 2N4240 SI TO-66 PD=35W	01928	2N4240
A19Q2	1854-0311	8		TRANSISTOR NPN 2N4240 SI TO-66 PD=35W	01928	2N4240
A19R1	0686-1045	9	3	RESISTOR 100K 5% .5W CC TC=0+882	01121	EB1045
A19R2	0686-1055	1	1	RESISTOR 1M 5% .5W CC TC=0+1000	01121	EB1055
A19R3	0686-1045	9		RESISTOR 100K 5% .5W CC TC=0+882	01121	EB1045
A19R4	0686-1005	1	3	RESISTOR 10 5% .5W CC TC=0+412	01121	EB1005
A19R5	2100-0552	3	1	RESISTOR-TRMR 50 10% C SIDE-ADJ 1-TRN	28480	2100-0552
A19R6	0683-3005	9	1	RESISTOR 30 5% .25W FC TC=-400/+500	01121	CB3005
A19R7	0698-0021	4	1	RESISTOR 3.3 10% .5W CC TC=0+412	01121	EB3301
A19R8	0813-0001	6	1	RESISTOR 1K 5% 3W PW TC=0+-20	28480	0813-0001
A19R9	0686-1045	9		RESISTOR 100K 5% .5W CC TC=0+882	01121	EB1045
A19R10	0686-1005	1		RESISTOR 10 5% .5W CC TC=0+412	01121	EB1005
A19R11	0686-1005	1		RESISTOR 10 5% .5W CC TC=0+412	01121	EB1005
A19RT1	0839-0006	5	2	THERMISTOR DISC 10-OHM TC=-3.8%/C-DEG	28480	0839-0006
A19RT2	0839-0006	5		THERMISTOR DISC 10-OHM TC=-3.8%/C-DEG	28480	0839-0006
A19RV1	0837-0106	2	2	VARISTOR 150VRMS	28480	0837-0106
A19RV2	0837-0106	2		VARISTOR 150VRMS	28480	0837-0106
A19T1	9100-3066	7	2	TRANSFORMER, POWER	28480	9100-3066
A19T2	9100-3066	7		TRANSFORMER, POWER	28480	9100-3066
A19TP4	1251-0600	0	5	CONNECTOR-SGL CONT PIN 1.14-MM-BSC-SZ SQ	28480	1251-0600
A19TP5	1251-0600	0		CONNECTOR-SGL CONT PIN 1.14-MM-BSC-SZ SQ	28480	1251-0600
A19TP6	1251-0600	0		CONNECTOR-SGL CONT PIN 1.14-MM-BSC-SZ SQ	28480	1251-0600
A19TP7	1251-0600	0		CONNECTOR-SGL CONT PIN 1.14-MM-BSC-SZ SQ	28480	1251-0600
A19TP8	1251-0600	0		CONNECTOR-SGL CONT PIN 1.14-MM-BSC-SZ SQ	28480	1251-0600
				A19 MISCELLANEOUS PARTS		
	0380-0342	9	4	STANDOFF-RVT-ON .125-IN-LG 6-32THD	00000	ORDER BY DESCRIPTION
	1205-0085	8	2	HEAT SINK TO-66-PKG	28480	1205-0085
	1400-0486	7	3	BRACKET-RTANG .312-LG X .375-LG .312-WD	28480	1400-0486
	1400-0776	8	1	CABLE TIE .01-4-DIA .19-WD NYL	28480	1400-0776
	7120-1340	6	4	WARNING LABEL	28480	7120-1340
	5000-9043	6	1	PIN,P.C. BOARD EXTRACTOR	28480	5000-9043
	5040-6852	3	1	EXTRACTOR, ORANGE	28480	5040-6852
	05342-00019	0	1	SHIELD, PROTECTIVE	28480	05342-00019

See introduction to this section for ordering information
*Indicates factory selected value

Table 6-3. Replaceable Parts (Continued)

Reference Designation	HP Part Number	C D	Qty	Description	Mfr Code	Mfr Part Number
A20	05342-60020	9	1	SECONDARY POWER ASSEMBLY (SERIES 1720)	28480	05342-60020
A20C1	0180-1780	7	2	CAPACITOR-FXD 500UF+75-10% 10VDC AL	56289	39D507G010EJ4
A20C2	0160-0576	5	3	CAPACITOR-FXD .1UF +-20% 50VDC CER	28480	0160-0576
A20C3	0160-0576	5		CAPACITOR-FXD .1UF +-20% 50VDC CER	28480	0160-0576
A20C4	0180-1780	7		CAPACITOR-FXD 500UF+75-10% 10VDC AL	56289	39D507G010EJ4
A20C5	0160-0573	2	1	CAPACITOR-FXD 4700PF +-20% 100VDC CER	28480	0160-0573
A20C6	0180-1746	5	2	CAPACITOR-FXD 15UF+-10% 20VDC TA	56289	150D156X9020B2
A20C7	0180-0160	5	2	CAPACITOR-FXD 22UF+-20% 35VDC TA	56289	150D226X0035R2
A20C8	0180-1746	5		CAPACITOR-FXD 15UF+-10% 20VDC TA	56289	150D156X9020B2
A20C9	0180-0160	5		CAPACITOR-FXD 22UF+-20% 35VDC TA	56289	150D226X0035R2
A20C10	0160-0576	5		CAPACITOR-FXD .1UF +-20% 50VDC CER	28480	0160-0576
A20C11	0180-0651	9	2	CAPACITOR-FXD 1700UF+75-10% 10VDC AL	09023	UFT-1700-10
A20C12	0180-0651	9		CAPACITOR-FXD 1700UF+75-10% 10VDC AL	09023	UFT-1700-10
A20CR1	1906-0079	6	1	DIODE-FW BRDG 100V 10A	28480	1906-0079
A20CR2	1906-0051	4	1	DIODE-FW BRDG 100V 1A	28480	1906-0051
A20CR3	1901-0784	0	2		28480	1901-0784
A20CR4	1901-0784	0			28480	1901-0784
A20CR5	1902-0522	6	1	DIODE-ZNR 1N5340B 6V 5% PD=5W IR=1UA	04713	1N5340B
A20DS1	1990-0485	5	1	LED-VISIBLE LUM-INT=800UCD IF=30MA-MAX	28480	5082-4984
A20L1	9100-3065	6	2		28480	9100-3065
A20L2	9140-0250	9	2	COIL 1MH Q=25 .3125DX.9LG-NOM SRF=100KHZ	28480	9140-0250
A20L3	9140-0250	9		COIL 1MH Q=25 .3125DX.9LG-NOM SRF=100KHZ	28480	9140-0250
A20L4	9100-3065	6			28480	9100-3065
A20L5	9140-0249	6	1	COIL 30UH Q=25 .4DX.875LG-NOM SRF=100KHZ	28480	9140-0249
A20Q1	1826-0214	1	1	IC V RGLTR TO-220	04713	MC7915CT
A20Q2	1826-0106	0	1	IC 7815 V RGLTR TO-220	04713	MC7815CP
A20R1	0683-4305	4	1	RESISTOR 43 5% .25W FC TC=+400/+500	01121	CB4305
A20R2	0684-0271	7	1	RESISTOR 2.7 10% .25W FC TC=+400/+500	01121	CB27G1
A20R3	0683-1015	7	1	RESISTOR 100 5% .25W FC TC=+400/+500	01121	CB1015
A20T1	9100-3064	5	1	TRANSFORMER, POWER	28480	9100-3064
				A20 MISCELLANEOUS PARTS		
	1205-0219	0	2	HEAT SINK SGL TO-66-PKG	28480	1205-0219
	1251-0600	0	1	CONNECTOR-SGL CONT PIN 1.14-MM-BSC-SZ SQ	28480	1251-0600
	3050-0003	3	1	WASHER-FL NM NO. 6 .141-IN-ID .375-IN-OD	28480	3050-0003
	3050-0082	8	2	WASHER-FL NM NO. 4 .116-IN-ID .188-IN-OD	28480	3050-0082
	5000-9043	6	1	PIN1P.C. BOARD EXTRACTOR	28480	5000-9043
	05342-00012	3	2	HEAT SINK, SOLID	28480	05342-00012
	5040-6852	3	1	EXTRACTOR, ORANGE	28480	5040-6852

See introduction to this section for ordering information
*Indicates factory selected value

Table 6-3. Replaceable Parts (Continued)

Reference Designation	HP Part Number	C D	Qty	Description	Mfr Code	Mfr Part Number
A21	05342-60021	0	1	SWITCH DRIVE ASSEMBLY (SERIES 1804)	28480	05342-60021
A21C1	0180-0229	7	4	CAPACITOR-FXD 33UF+-10% 10VDC TA	56289	150D336X9010B2
A21C2	0180-0229	7		CAPACITOR-FXD 33UF+-10% 10VDC TA	56289	150D336X9010B2
A21C3	0180-0159	2	2	CAPACITOR-FXD 220UF+-20% 10VDC TA	56289	150D227X0010B2
A21C4	0180-0159	2		CAPACITOR-FXD 220UF+-20% 10VDC TA	56289	150D227X0010B2
A21C5	0180-0229	7		CAPACITOR-FXD 33UF+-10% 10VDC TA	56289	150D336X9010B2
A21C6	0180-0210	6	4	CAPACITOR-FXD 3.3UF+-20% 15VDC TA	56289	150D335X0015A2
A21C7	0180-0210	6		CAPACITOR-FXD 3.3UF+-20% 15VDC TA	56289	150D335X0015A2
A21C8	0180-0210	6		CAPACITOR-FXD 3.3UF+-20% 15VDC TA	56289	150D335X0015A2
A21C9	0180-0210	6		CAPACITOR-FXD 3.3UF+-20% 15VDC TA	56289	150D335X0015A2
A21C10	0180-1746	5	1	CAPACITOR-FXD 15UF+-10% 20VDC TA	56289	150D156X9020B2
A21C11	0180-1701	2	1	CAPACITOR-FXD 6.8UF+-20% 6VDC TA	56289	150D685X0006A2
A21C12	0180-0197	8	1	CAPACITOR-FXD 2.2UF+-10% 20VDC TA	56289	150D225X9020A2
A21C13	0160-0576	5	2	CAPACITOR-FXD .1UF +-20% 50VDC CER	28480	0160-0576
A21C14	0180-0491	5	1	CAPACITOR-FXD 10UF+-20% 25VDC TA	28480	0180-0491
A21C15	0180-2373	6	3	CAPACITOR-FXD 580UF+150-10% 35VDC AL	28480	0180-2373
A21C16	0180-2373	6		CAPACITOR-FXD 580UF+150-10% 35VDC AL	28480	0180-2373
A21C17	0160-0576	5		CAPACITOR-FXD .1UF +-20% 50VDC CER	28480	0160-0576
A21C18	0160-3878	6	1	CAPACITOR-FXD 1000PF +-20% 100VDC CER	28480	0160-3878
A21C19	0160-0945	2	1	CAPACITOR-FXD 910PF +-5% 100VDC MICA	28480	0160-0945
A21C20	0180-2373	6		CAPACITOR-FXD 580UF+150-10% 35VDC AL	28480	0180-2373
A21C21	0160-0161	4	1	CAPACITOR-FXD .01UF +-10% 200VDC POLYE	28480	0160-0161
A21C22	0180-0229	7		CAPACITOR-FXD 33UF+-10% 10VDC TA	56289	150D336X9010B2
A21CR1	1902-0522	6	2	DIODE-ZNR 1N5340B 6V 5% PD=5W IR=1UA	04713	1N5340B
A21CR2	1906-0096	7	1	DIODE-FW BRDG 200V 2A	04713	MDA202
A21CR3	1902-0522	6		DIODE-ZNR 1N5340B 6V 5% PD=5W IR=1UA	04713	1N5340B
A21CR4	1902-0644	3	1	DIODE-ZNR 1N5363B 30V 5% PD=5W TC=+29MV	28480	1902-0644
A21CR5	1901-0040	1	1	DIODE-SWITCHING 30V 50MA 2NS DO-35	28480	1901-0040
A21DS1	1990-0486	6	1	LED-VISIBLE LUM-INT=1MCD IF=20MA-MAX	28480	5082-4684
A21L1	9100-2276	9	1	COIL-MLD 100UH 10% Q=50 .095Dx.25LG-NOM	28480	9100-2276
A21Q1	1854-0635	9	1	TRANSISTOR NPN SI PD=50W	03508	D44H5
A21Q2	1854-0634	8	1	TRANSISTOR NPN SI PD=1W FT=50MHZ	04713	MPS-U01
A21Q3	1854-0215	1	2	TRANSISTOR NPN SI PD=350MW FT=300MHZ	04713	SPS 3611
A21Q4	1853-0326	3	1	TRANSISTOR PNP SI PD=1W FT=50MHZ	28480	1853-0326
A21Q5	1853-0036	2	1	TRANSISTOR PNP SI PD=310MW FT=250MHZ	28480	1853-0036
A21Q6	1853-0363	8	1	TRANSISTOR PNP SI PD=50W	03508	X45H281
A21Q7	1826-0275	4	2	IC 78L12A V RGLTR TO-92	04713	MC78L12ACP
A21Q8	1826-0275	4		IC 78L12A V RGLTR TO-92	04713	MC78L12ACP
A21Q9	1854-0246	8	2	TRANSISTOR NPN SI PD=350MW FT=250MHZ	04713	SPS 233
A21Q10	1853-0058	8	2	TRANSISTOR PNP SI PD=300MW FT=200MHZ	07263	S32248
A21Q11	1854-0246	8		TRANSISTOR NPN SI PD=350MW FT=250MHZ	04713	SPS 233
A21Q12	1853-0058	8		TRANSISTOR PNP SI PD=300MW FT=200MHZ	07263	S32248
A21Q13	1854-0215	1		TRANSISTOR NPN SI PD=350MW FT=300MHZ	04713	SPS 3611
A21R1	0757-0419	0	5	RESISTOR 681 1% .125W F TC=0+-100	24546	C4-1/8-T0-681R-F
A21R2	0757-0417	8	1	RESISTOR 562 1% .125W F TC=0+-100	24546	C4-1/8-T0-562R-F
A21R3	0698-3441	8	3	RESISTOR 215 1% .125W F TC=0+-100	24546	C4-1/8-T0-215R-F
A21R4	0757-0419	0		RESISTOR 681 1% .125W F TC=0+-100	24546	C4-1/8-T0-681R-F
A21R5	0757-0419	0		RESISTOR 681 1% .125W F TC=0+-100	24546	C4-1/8-T0-681R-F
A21R6	0698-3155	1	5	RESISTOR 4.64K 1% .125W F TC=0+-100	24546	C4-1/8-T0-4641-F
A21R7	0698-5808	5	1	RESISTOR 4K 1% .125W F TC=0+-100	24546	C4-1/8-T0-4001-F
A21R8	0698-3444	1	1	RESISTOR 316 1% .125W F TC=0+-100	24546	C4-1/8-T0-316R-F
A21R9	0811-1827	2	2	RESISTOR .1 10% 3W PW TC=0+-90	28480	0811-1827
A21R10	0757-0419	0		RESISTOR 681 1% .125W F TC=0+-100	24546	C4-1/8-T0-681R-F
A21R11	0698-3155	1		RESISTOR 4.64K 1% .125W F TC=0+-100	24546	C4-1/8-T0-4641-F
A21R12	0811-1827	2		RESISTOR .1 10% 3W PW TC=0+-90	28480	0811-1827
A21R13	0757-0346	2	1	RESISTOR 10 1% .125W F TC=0+-100	24546	C4-1/8-T0-10R0-F
A21R14	0698-3441	8		RESISTOR 215 1% .125W F TC=0+-100	24546	C4-1/8-T0-215R-F
A21R15	0698-3441	8		RESISTOR 215 1% .125W F TC=0+-100	24546	C4-1/8-T0-215R-F
A21R16	0698-0082	7	2	RESISTOR 464 1% .125W F TC=0+-100	24546	C4-1/8-T0-4640-F
A21R17	2100-3154	7	1	RESISTOR-TRMR 1K 10% C SIDE-ADJ 17-TRN	02111	43P102
A21R18	0757-0465	6	3	RESISTOR 100K 1% .125W F TC=0+-100	24546	C4-1/8-T0-1003-F
A21R19	0698-0084	9	3	RESISTOR 2.15K 1% .125W F TC=0+-100	24546	C4-1/8-T0-2151-F
A21R20	0757-0280	3	2	RESISTOR 1K 1% .125W F TC=0+-100	24546	C4-1/8-T0-1001-F
A21R21	0698-0082	7		RESISTOR 464 1% .125W F TC=0+-100	24546	C4-1/8-T0-4640-F
A21R22	0757-0280	3		RESISTOR 1K 1% .125W F TC=0+-100	24546	C4-1/8-T0-1001-F
A21R23	0698-3155	1		RESISTOR 4.64K 1% .125W F TC=0+-100	24546	C4-1/8-T0-4641-F
A21R24	0698-3155	1		RESISTOR 4.64K 1% .125W F TC=0+-100	24546	C4-1/8-T0-4641-F
A21R25	0757-0465	6		RESISTOR 100K 1% .125W F TC=0+-100	24546	C4-1/8-T0-1003-F
A21R26	0698-3150	6	2	RESISTOR 2.37K 1% .125W F TC=0+-100	24546	C4-1/8-T0-2371-F
A21R27	2100-3211	7	1	RESISTOR-TRMR 1K 10% C TOP-ADJ 1-TRN	28480	2100-3211
A21R28	0757-0419	0		RESISTOR 681 1% .125W F TC=0+-100	24546	C4-1/8-T0-681R-F
A21R29	0698-3150	6		RESISTOR 2.37K 1% .125W F TC=0+-100	24546	C4-1/8-T0-2371-F
A21R30	0698-0084	9		RESISTOR 2.15K 1% .125W F TC=0+-100	24546	C4-1/8-T0-2151-F

See introduction to this section for ordering information
*Indicates factory selected value

Table 6-3. Replaceable Parts (Continued)

Reference Designation	HP Part Number	C D	Qty	Description	Mfr Code	Mfr Part Number
A21R31	0698-0084	9		RESISTOR 2.15K 1% .125W F TC=0+-100	24546	C4-1/8-T0-2151-F
A21R33	0757-0465	6		RESISTOR 100K 1% .125W F TC=0+-100	24546	C4-1/8-T0-1003-F
A21R37	0698-3155	1		RESISTOR 4.64K 1% .125W F TC=0+-100	24546	C4-1/8-T0-4641-F
A21TP1	1251-0600	0	11	CONNECTOR-SGL CONT PIN 1.14-MM-BSC-SZ SQ	28480	1251-0600
A21TP2	1251-0600	0		CONNECTOR-SGL CONT PIN 1.14-MM-BSC-SZ SQ	28480	1251-0600
A21TP3	1251-0600	0		CONNECTOR-SGL CONT PIN 1.14-MM-BSC-SZ SQ	28480	1251-0600
A21TP4	1251-0600	0		CONNECTOR-SGL CONT PIN 1.14-MM-BSC-SZ SQ	28480	1251-0600
A21U1	1820-0493	6	2	IC OP AMP 8-DIP-P	27014	LM307N
A21U2	1820-0493	6		IC OP AMP 8-DIP-P	27014	LM307N
A21U3	1826-0355	1	1	IC 555 8-DIP-P	28480	1826-0355
A21U4	1826-0428	9	1	IC 3524 MODULATOR 16-DIP-C	01295	SG3524J
				A21 MISCELLANEOUS PARTS		
	1205-0273	6	2	HEAT SINK SGL PLSTC-PWR-PKG	28480	1205-0273
	5000-9043	6	1	PIN:P.C. BOARD EXTRACTOR	28480	5000-9043
	5040-6852	3	1	EXTRACTOR, ORANGE	28480	5040-6852

See introduction to this section for ordering information
*Indicates factory selected value

Table 6-3. Replaceable Parts (Continued)

Reference Designation	HP Part Number	C D	Qty	Description	Mfr Code	Mfr Part Number
A22	05342-60022	1	1	MOTHERBOARD ASSEMBLY (SERIES 1720)	28480	05342-60022
A22J1	1200-0785	5	2	SOCKET-IC 24-CONT DIP DIP-SLDR	28480	1200-0785
A22J2	1200-0785	5		SOCKET-IC 24-CONT DIP DIP-SLDR	28480	1200-0785
A22T1	9100-3067	8	1	TRANSFORMER, POWER	28480	9100-3067
A22W1	05342-60102	8	1	CABLE ASSEMBLY, 1.0 MAG	28480	05342-60102
A22W2	05342-60121	1	1	CABLE ASSEMBLY, LF MB	28480	05342-60121
A22W3	05342-60103	9	1	CABLE ASSEMBLY, IF INT	28480	05342-60103
A22W4	05342-60109	5	1	CABLE ASSEMBLY, MICRO INT	28480	05342-60109
A22W5	05342-60104	0	1	CABLE ASSEMBLY, SHIELD	28480	05342-60104
A22W6	05342-60112	0	1	CABLE ASSEMBLY, SHIELD	28480	05342-60112
A22W7	05342-60111	9	1	CABLE ASSEMBLY, POWER (INCLUDES LINE SWITCH)	28480	05342-60111
A22XA3	1251-1626	2	5	CONNECTOR-PC EDGE 12-CONT/ROW 2-ROWS	28480	1251-1626
A22XA4	1251-2034	8		CONNECTOR-PC EDGE 10-CONT/ROW 2-ROWS	28480	1251-2034
A22XA5	1251-2034	8		CONNECTOR-PC EDGE 10-CONT/ROW 2-ROWS	28480	1251-2034
A22XA6	1251-2034	8		CONNECTOR-PC EDGE 10-CONT/ROW 2-ROWS	28480	1251-2034
A22XA7	1251-1626	2		CONNECTOR-PC EDGE 12-CONT/ROW 2-ROWS	28480	1251-1626
A22XA8	1251-1626	2		CONNECTOR-PC EDGE 12-CONT/ROW 2-ROWS	28480	1251-1626
A22XA9	1251-1626	2		CONNECTOR-PC EDGE 12-CONT/ROW 2-ROWS	28480	1251-1626
A22XA10	1251-1365	6	5	CONNECTOR-PC EDGE 22-CONT/ROW 2-ROWS	28480	1251-1365
A22XA11	1251-1626	2		CONNECTOR-PC EDGE 12-CONT/ROW 2-ROWS	28480	1251-1626
A22XA12	1251-1365	6		CONNECTOR-PC EDGE 22-CONT/ROW 2-ROWS	28480	1251-1365
A22XA13	1251-1365	6		CONNECTOR-PC EDGE 22-CONT/ROW 2-ROWS	28480	1251-1365
A22XA14A	1251-2026	8	6	CONNECTOR-PC EDGE 18-CONT/ROW 2-ROWS	28480	1251-2026
A22XA14B	1251-2026	8		CONNECTOR-PC EDGE 18-CONT/ROW 2-ROWS	28480	1251-2026
A22XA15A	1251-2026	8		CONNECTOR-PC EDGE 18-CONT/ROW 2-ROWS	28480	1251-2026
A22XA15B	1251-2026	8		CONNECTOR-PC EDGE 18-CONT/ROW 2-ROWS	28480	1251-2026
A22XA16	1251-2026	8		CONNECTOR-PC EDGE 18-CONT/ROW 2-ROWS	28480	1251-2026
A22XA16B	1251-2034	8	6	CONNECTOR-PC EDGE 10-CONT/ROW 2-ROWS	28480	1251-2034
A22XA17	1251-2026	8		CONNECTOR-PC EDGE 18-CONT/ROW 2-ROWS	28480	1251-2026
A22XA18	1251-2034	8		CONNECTOR-PC EDGE 10-CONT/ROW 2-ROWS	28480	1251-2034
A22XA19	1251-2582	1	1	CONNECTOR-PC EDGE 24-CONT/ROW 2-ROWS	28480	1251-2582
A22XA20	1251-1365	6		CONNECTOR-PC EDGE 22-CONT/ROW 2-ROWS	28480	1251-1365
A22XA21	1251-1365	6		CONNECTOR-PC EDGE 22-CONT/ROW 2-ROWS	28480	1251-1365
A22XA24	1251-2034	8		CONNECTOR-PC EDGE 10-CONT/ROW 2-ROWS	28480	1251-2034
	0380-0383	8	5	STANDOFF-RVT-ON .125-IN-LG 6-32THD	00000	ORDER BY DESCRIPTION
	1251-2205	5	2	POLARIZING KEY-PC EDGE CONN	28480	1251-2205
	5040-0170	6	1	GUIDE:PLUG-IN PC BOARD	28480	5040-0170
A23	0960-0444	2	1	POWER MODULE, UNFILTERED	28480	0960-0444
A24	05341-60047	9	1	10 MHZ OSCILLATOR ASSY (SERIES 1804)	28480	05341-60047
A24C1	0160-2143	6	1	CAPACITOR-FXD 2000PF +80-20% 1KVDC CER	28480	0160-2143
A24C2	0180-0552	9	1	CAPACITOR-FXD 220UF+-20% 10VDC TA	28480	0180-0552
A24L1	9100-2430	7	1	COIL-MLD 220UH 10% Q=55 .156DX.375LG-NOM	28480	9100-2430
A24Y1	0960-0394	1	1	CRYSTAL	28480	0960-0394

Table 6-3. Replaceable Parts (Continued)

Reference Designation	HP Part Number	CD	Qty	Description	Mfr Code	Mfr Part Number
A25	05342-60025	4	1	PREAMPLIFIER ASSEMBLY (SERIES 1804)	28480	05342-60025
A25C1	0180-0230	0	4	CAPACITOR-FXD 1UF+-20% 50VDC TA	56289	150D105X0050A2
A25C2	0160-3879	7	15	CAPACITOR-FXD .01UF +-20% 100VDC CER	28480	0160-3879
A25C3	0160-3879	7		CAPACITOR-FXD .01UF +-20% 100VDC CER	28480	0160-3879
A25C4	0160-3879	7		CAPACITOR-FXD .01UF +-20% 100VDC CER	28480	0160-3879
A25C5	0160-3879	7		CAPACITOR-FXD .01UF +-20% 100VDC CER	28480	0160-3879
A25C6	0160-3879	7		CAPACITOR-FXD .01UF +-20% 100VDC CER	28480	0160-3879
A25C7	0160-3879	7		CAPACITOR-FXD .01UF +-20% 100VDC CER	28480	0160-3879
A25C8	0160-3879	7		CAPACITOR-FXD .01UF +-20% 100VDC CER	28480	0160-3879
A25C9	0160-3879	7		CAPACITOR-FXD .01UF +-20% 100VDC CER	28480	0160-3879
A25C10	0160-2263	1	1	CAPACITOR-FXD 18PF +-5% 500VDC CER 0+-30	28480	0160-2263
A25C11	0121-0445	5	1	CAPACITOR-V TRMR-CER 4.5-20PF 160V	28480	0121-0445
A25C12	0180-0230	0		CAPACITOR-FXD 1UF+-20% 50VDC TA	56289	150D105X0050A2
A25C13	0160-3879	7		CAPACITOR-FXD .01UF +-20% 100VDC CER	28480	0160-3879
A25C14	0160-3879	7		CAPACITOR-FXD .01UF +-20% 100VDC CER	28480	0160-3879
A25C15	0160-3879	7		CAPACITOR-FXD .01UF +-20% 100VDC CER	28480	0160-3879
A25C16	0160-3878	6	1	CAPACITOR-FXD 1000PF +-20% 100VDC CER	28480	0160-3878
A25C17	0160-2260	8	2	CAPACITOR-FXD 13PF +-5% 500VDC CER 0+-30	28480	0160-2260
A25C18	0160-2265	3	1	CAPACITOR-FXD 22PF +-5% 500VDC CER 0+-30	28480	0160-2265
A25C19	0160-2260	8		CAPACITOR-FXD 13PF +-5% 500VDC CER 0+-30	28480	0160-2260
A25C20	0160-0576	5	1	CAPACITOR-FXD .1UF +-20% 50VDC CER	28480	0160-0576
A25C21	0160-3879	7		CAPACITOR-FXD .01UF +-20% 100VDC CER	28480	0160-3879
A25C22	0160-3879	7		CAPACITOR-FXD .01UF +-20% 100VDC CER	28480	0160-3879
A25C23	0160-3879	7		CAPACITOR-FXD .01UF +-20% 100VDC CER	28480	0160-3879
A25C24	0180-0230	0		CAPACITOR-FXD 1UF+-20% 50VDC TA	56289	150D105X0050A2
A25C25	0180-0230	0		CAPACITOR-FXD 1UF+-20% 50VDC TA	56289	150D105X0050A2
A25C26	0160-3879	7		CAPACITOR-FXD .01UF +-20% 100VDC CER	28480	0160-3879
A25C27	0160-4082	6	8	CAPACITOR-FDTHRU 1000PF 20% 200V CER	28480	0160-4082
A25C28	0160-4082	6		CAPACITOR-FDTHRU 1000PF 20% 200V CER	28480	0160-4082
A25C29	0160-4082	6		CAPACITOR-FDTHRU 1000PF 20% 200V CER	28480	0160-4082
A25C30	0160-4082	6		CAPACITOR-FDTHRU 1000PF 20% 200V CER	28480	0160-4082
A25C31	0160-4082	6		CAPACITOR-FDTHRU 1000PF 20% 200V CER	28480	0160-4082
A25C32	0160-4082	6		CAPACITOR-FDTHRU 1000PF 20% 200V CER	28480	0160-4082
A25C33	0160-4082	6		CAPACITOR-FDTHRU 1000PF 20% 200V CER	28480	0160-4082
A25C34	0160-4082	6		CAPACITOR-FDTHRU 1000PF 20% 200V CER	28480	0160-4082
A25C35	0160-3029	9	2	CAPACITOR-FXD 7.5PF +-.5PF 100VDC CER	28480	0160-3029
A25C36	0160-3029	9		CAPACITOR-FXD 7.5PF +-.5PF 100VDC CER	28480	0160-3029
A25CR1	1901-0535	9	2	DIODE-SCHOTTKY	28480	1901-0535
A25CR2	1901-0535	9		DIODE-SCHOTTKY	28480	1901-0535
A25CR3	1901-0040	1	3	DIODE-SWITCHING 30V 50MA 2NS DO-35	28480	1901-0040
A25CR4	1901-0040	1		DIODE-SWITCHING 30V 50MA 2NS DO-35	28480	1901-0040
A25CR5	1901-0040	1		DIODE-SWITCHING 30V 50MA 2NS DO-35	28480	1901-0040
A25L1	05342-80002	9	4	COI, 3-TURNS	28480	05342-80002
A25L2	05342-80002	9		COI, 3-TURNS	28480	05342-80002
A25L3	9100-0346	0	3	COIL-MLD 50NH 20% Q=40 .095DX.25LG-NOM	28480	9100-0346
A25L4	9100-0346	0		COIL-MLD 50NH 20% Q=40 .095DX.25LG-NOM	28480	9100-0346
A25L5	05342-80002	9		COI, 3-TURNS	28480	05342-80002
A25L6	05342-80002	9		COI, 3-TURNS	28480	05342-80002
A25L7	9100-0346	0		COIL-MLD 50NH 20% Q=40 .095DX.25LG-NOM	28480	9100-0346
A25L8	9100-2265	6	4	COIL-MLD 10UH 10% Q=60 .095DX.25LG-NOM	28480	9100-2265
A25L9	9100-2265	6		COIL-MLD 10UH 10% Q=60 .095DX.25LG-NOM	28480	9100-2265
A25L10	9100-2247	4	3	COIL-MLD 100NH 10% Q=34 .095DX.25LG-NOM	28480	9100-2247
A25L11	9100-2247	4		COIL-MLD 100NH 10% Q=34 .095DX.25LG-NOM	28480	9100-2247
A25L12	9100-2247	4		COIL-MLD 100NH 10% Q=34 .095DX.25LG-NOM	28480	9100-2247
A25L13	9100-2265	6		COIL-MLD 10UH 10% Q=60 .095DX.25LG-NOM	28480	9100-2265
A25L14	9100-2265	6		COIL-MLD 10UH 10% Q=60 .095DX.25LG-NOM	28480	9100-2265
A25Q1	1854-0591	6	2	TRANSISTOR NPN SI PD=180MW FT=4GHZ	25403	BFR-90
A25Q2	1854-0591	6		TRANSISTOR NPN SI PD=180MW FT=4GHZ	25403	BFR-90
A25Q3	1854-0071	7	2	TRANSISTOR NPN SI PD=300MW FT=200MHZ	28480	1854-0071
A25Q4	1854-0071	7		TRANSISTOR NPN SI PD=300MW FT=200MHZ	28480	1854-0071
A25Q5	1853-0058	8	1	TRANSISTOR PNP SI PD=300MW FT=200MHZ	07263	832248
A25Q6	1853-0020	4	1	TRANSISTOR PNP SI PD=300MW FT=150MHZ	28480	1853-0020
A25R1	0698-3113	1	3	RESISTOR 100 5% .125W CC TC=-270/+540	01121	BB1015
A25R2	0698-5176	0	2	RESISTOR 510 5% .125W CC TC=-330/+800	01121	BB5115
A25R3	0698-1021	8	1	RESISTOR 1K 10% .125W CC TC=-330/+800	01121	BB1021
A25R4	0698-3114	2	1	RESISTOR 300 5% .125W CC TC=-330/+800	01121	BB3015
A25R5	0698-8073	2	1	RESISTOR 1.6K 5% .125W CC TC=-350/+857	01121	BB1625
A25R6	0698-8354	2	1	RESISTOR 270 5% .125W CC TC=-330/+800	01121	BB2715
A25R7	0698-6000	1	1	RESISTOR 2.7K 5% .125W CC TC=-350/+857	01121	BB2725
A25R8	0698-6123	9	1	RESISTOR 20K 5% .125W CC TC=-466/+875	01121	BB2035
A25R9	0698-6681	4	2	RESISTOR 9.1 5% .125W CC TC=-120/+400	01121	BB9105
A25R10	05342-80004	1	4	RESISTOR, MODIFIED	28480	05342-80004

See introduction to this section for ordering information
*Indicates factory selected value

Table 6-3. Replaceable Parts (Continued)

Reference Designation	HP Part Number	C D	Qty	Description	Mfr Code	Mfr Part Number
A25R11	05342-80004	1		RESISTOR, MODIFIED	28480	05342-80004
A25R12	0698-5996	2	2	RESISTOR 560 5% .125W CC TC=-330/+800	01121	BB5615
A25R13	05342-80004	1		RESISTOR, MODIFIED	28480	05342-80004
A25R14	05342-80004	1		RESISTOR, MODIFIED	28480	05342-80004
A25R15	0698-5996	2		RESISTOR 560 5% .125W CC TC=-330/+800	01121	BB5615
A25R16	0698-5075	8	1	RESISTOR 130 5% .125W CC TC=-330/+800	01121	BB1315
A25R17	0698-6681	4		RESISTOR 9.1 5% .125W CC TC=-120/+400	01121	BB91G5
A25R18	0698-3111	9	2	RESISTOR 30 5% .125W CC TC=-270/+540	01121	BB3005
A25R19	0757-0399	5	1	RESISTOR 82.5 1% .125W F TC=0+-100	24546	C4-1/8-T0-82R5-F
A25R20	0698-3113	1		RESISTOR 100 5% .125W CC TC=-270/+540	01121	BB1015
A25R21	0698-5562	8	2	RESISTOR 120 5% .125W CC TC=-330/+800	01121	BB1215
A25R22	0757-0180	2	1	RESISTOR 31.6 1% .125W F TC=0+-100	28480	0757-0180
A25R23	0757-0438	3	1	RESISTOR 5.11K 1% .125W F TC=0+-100	24546	C4-1/8-T0-5111-F
A25R24	0698-3113	1		RESISTOR 100 5% .125W CC TC=-270/+540	01121	BB1015
A25R25	0698-3111	9		RESISTOR 30 5% .125W CC TC=-270/+540	01121	BB3005
A25R26	0698-3378	0	1	RESISTOR 51 5% .125W CC TC=-270/+540	01121	BB5105
A25R27	0698-5562	8		RESISTOR 120 5% .125W CC TC=-330/+800	01121	BB1215
A25R28	2100-3207	1	1	RESISTOR-TRMR 5K 10% C SIDE-ADJ 1-TRN	28480	2100-3207
A25R29	0757-0485	0	2	RESISTOR 681K 1% .125W F TC=0+-100	28480	0757-0485
A25R30	0757-0485	0		RESISTOR 681K 1% .125W F TC=0+-100	28480	0757-0485
A25R31	2100-3274	2	1	RESISTOR-TRMR 10K 10% C SIDE-ADJ 1-TRN	28480	2100-3274
A25R32	0757-0469	0	1	RESISTOR 150K 1% .125W F TC=0+-100	24546	C4-1/8-T0-1503-F
A25R33	0698-7966	0	1	RESISTOR 680K 5% .125W CC TC=-600/+1137	01121	BB6845
A25R34	0698-5176	0		RESISTOR 510 5% .125W CC TC=-330/+800	01121	BB5115
A25R35	0698-7241	4	1	RESISTOR 1.62K 1% .05W F TC=0+-100	28480	0698-7241
A25R36	0757-0027	6	1	RESISTOR 365 1% .5W F TC=0+-25	28480	0757-0027
A25R37	0698-7259	4	2	RESISTOR 9.09K 1% .05W F TC=0+-100	24546	C3-1/8-T0-9091-G
A25R38	0698-7253	8	3	RESISTOR 5.11K 1% .05W F TC=0+-100	24546	C3-1/8-T0-5111-G
A25R39	0698-7259	4		RESISTOR 9.09K 1% .05W F TC=0+-100	24546	C3-1/8-T0-9091-G
A25R40	0698-7253	8		RESISTOR 5.11K 1% .05W F TC=0+-100	24546	C3-1/8-T0-5111-G
A25R41	0698-7250	5	1	RESISTOR 3.83K 1% .05W F TC=0+-100	24546	C3-1/8-T0-3831-G
A25R42	0698-7253	8		RESISTOR 5.11K 1% .05W F TC=0+-100	24546	C3-1/8-T0-5111-G
A25R43	0698-7243	6	1	RESISTOR 1.96K 1% .05W F TC=0+-100	24546	C3-1/8-T0-1961-G
A25R44	0698-5994	0	1	RESISTOR 6.8K 5% .125W CC TC=-350/+857	01121	BB6825
A25R45	0698-8373	5	1	RESISTOR 470K 5% .125W CC TC=-600/+1137	01121	BB4745
A25TP1	1251-0600	0	4	CONNECTOR-SGL CONT PIN 1.14-MM-BSC-SZ SQ	28480	1251-0600
A25TP2	1251-0600	0		CONNECTOR-SGL CONT PIN 1.14-MM-BSC-SZ SQ	28480	1251-0600
A25TP3	1251-0600	0		CONNECTOR-SGL CONT PIN 1.14-MM-BSC-SZ SQ	28480	1251-0600
A25TP4	1251-0600	0		CONNECTOR-SGL CONT PIN 1.14-MM-BSC-SZ SQ	28480	1251-0600
A25U1	1826-0372	2	2	IC 5 GHZ LIMITER/AMP	28480	1826-0372
A25U2	1826-0372	2		IC 5 GHZ LIMITER/AMP	28480	1826-0372
A25U3	1826-0065	0	1	IC 311 COMPARATOR 8-DIP-P	01295	SN72311P
A25U4	1820-005A	5	1	IC GATE TTL NAND QUAD 2-INP	01295	SN7400N
A25W1	05342-60108	4	1	CABLE ASSEMBLY, RF	28480	05342-60108
A25W2	05342-60107	3	2	CABLE ASSEMBLY, PREAMP/DRIVER	28480	05342-60107
A25W3	05342-60107	3		CABLE ASSEMBLY, PREAMP/DRIVER	28480	05342-60107
				A25 MISCELLANEOUS PARTS		
	1200-0647	8	1	SOCKET-XSTR 3-CONT TO-18 DIP-SLDR	28480	1200-0647
	1250-0901	2	2	CONNECTOR-RF SMB M SGL-HOLE-FR 50-OHM	28480	1250-0901
	1400-0486	7	3	BRACKET-RTANG .312-LG X .375-LG .312-WD	28480	1400-0486
	2190-0033	4	1	WASHER-LK INTL T 5/16 IN .314-IN-ID	28480	2190-0033
	2950-0007	4	1	NUT-HEX-DBL-CHAM 5/16-32-THD .094-IN-THK	00000	ORDER BY DESCRIPTION
	05342-00006	5	1	COVER, PREAMPLIFIER	28480	05342-00006
	05342-00007	6	1	BRACKET, SAMPLER	28480	05342-00007
	05342-20103	5	1	SHELL, CONNECTOR	28480	05342-20103

See introduction to this section for ordering information
*Indicates factory selected value

Table 6-3. Replaceable Parts (Continued)

Reference Designation	HP Part Number	C D	Qty	Description	Mfr Code	Mfr Part Number
A26	05342-60026	5	1	SAMPLER DRIVER ASSEMBLY (SERIES 1720)	28480	05342-60026
A26C1	0160-4536	5	1	CAPACITOR-FXD 27PF +-5% 500VDC CER	28480	0160-4536
A26C2	0160-3879	7	6	CAPACITOR-FXD .01UF +-20% 100VDC CER	28480	0160-3879
A26C3	0160-3876	4	2	CAPACITOR-FXD 47PF +-20% 200VDC CER	28480	0160-3876
A26C4	0160-3879	7		CAPACITOR-FXD .01UF +-20% 100VDC CER	28480	0160-3879
A26C5	0160-3876	4		CAPACITOR-FXD 47PF +-20% 200VDC CER	28480	0160-3876
A26C6	0160-3879	7		CAPACITOR-FXD .01UF +-20% 100VDC CER	28480	0160-3879
A26C7	0160-3879	7		CAPACITOR-FXD .01UF +-20% 100VDC CER	28480	0160-3879
A26C8	0180-1745	4	1	CAPACITOR-FXD 1.5UF+-10% 20VDC TA	56289	150D155X9020A2
A26C9	0160-3879	7		CAPACITOR-FXD .01UF +-20% 100VDC CER	28480	0160-3879
A26C10	0160-3879	7		CAPACITOR-FXD .01UF +-20% 100VDC CER	28480	0160-3879
A26C11	0160-0576	5	1	CAPACITOR-FXD .1UF +-20% 50VDC CER	28480	0160-0576
A26C12	0160-4542	3	1	CAPACITOR-FXD 15PF +-5% 50VDC CER 0+-30	28480	0160-4542
A26C13	0160-4082	6	2	CAPACITOR-FDTHRU 1000PF 20% 200V CER	28480	0160-4082
A26C14	0160-4082	6		CAPACITOR-FDTHRU 1000PF 20% 200V CER	28480	0160-4082
A26CR1	1901-0796	4	1		28480	1901-0796
A26CR2	1901-0179	7	1	DIODE-SWITCHING 15V 50MA 750PS DO-7	28480	1901-0179
A26J1	05342-20109	1	1	SUPPORT, CONNECTOR OUTPUT	28480	05342-20109
A26J2	05342-20108	9	1	SUPPORT, CONNECTOR INPUT	28480	05342-20108
A26L1	9100-0346	0	1	COIL-MLD 50NH 20% Q=40 .095DX.25LG-NOM	28480	9100-0346
A26Q1	1854-0071	7	1	TRANSISTOR NPN SI PD=300MW FT=200MHZ	28480	1854-0071
A26R1	0757-0384	8	1	RESISTOR 20 1% .125W F TC=0+-100	19701	MF4C1/8-T0-20R0-F
A26R2	0698-7101	5	1	RESISTOR 3K 5% .125W CC TC=-350/+857	01121	BB3025
A26R3	0698-5179	3	1	RESISTOR 1.8K 5% .125W CC TC=-350/+857	01121	BB1825
A26R4	0757-0180	2	1	RESISTOR 31.6 1% .125W F TC=0+-100	28480	0757-0180
A26R5	0698-3111	9	1	RESISTOR 30 5% .125W CC TC=-270/+540	01121	BB3005
A26R6	0698-4132	6	1	RESISTOR 62 5% .125W CC TC=-270/+540	01121	BB6205
A26R7	0698-6648	3	1	RESISTOR 620 5% .125W CC TC=-330/+800	01121	BB6215
A26R8	0698-3437	2	1	RESISTOR 133 1% .125W F TC=0+-100	24546	C4-1/8-T0-133R-F
A26TP1	0360-1682	0	2	TERMINAL-STUD SGL-TUR PRESS-MTG	28480	0360-1682
A26TP2	0360-1682	0		TERMINAL-STUD SGL-TUR PRESS-MTG	28480	0360-1682
A26U1	1858-0060	2	1	TRANSISTOR, ARRAY	28480	1858-0060
A26W1	05342-20107	9	1	CABLE, COAX, OUTPUT	28480	05342-20107
				A26 MISCELLANEOUS PARTS		
	0380-0486	2	2	SPACER-RND .5-IN-LG .086-IN-ID	28480	0380-0486
	0520-0127	6	2	SCREW-MACH 2-56 .188-IN-LG PAN-HD-POZI	00000	ORDER BY DESCRIPTION
	0570-0007	6	2	SCREW-MACH 0-80 .188-IN-LG FIL-HD-SLT	00000	ORDER BY DESCRIPTION
	0570-0024	7	1	SCREW-MACH 0-80 .25-IN-LG FIL-HD-SLT	00000	ORDER BY DESCRIPTION
	1205-0011	0	1	HEAT SINK TO-5/TO-39-PKG	28480	1205-0011
	1250-0901	2	1	CONNECTOR-RF SMB M SGL-HOLE-FR 50-OHM	28480	1250-0901
	1250-1353	0	1	CONNECTOR-RF SMA M UNMTD 50-OHM	28480	1250-1353
	05342-00009	8	1	CONTACT, DIODE	28480	05342-00009
	05342-00011	2	1	HOUSING, SAMPLER DRIVER	28480	05342-00011
	05342-00013	4	1	COVER, SAMPLER DRIVER	28480	05342-00013
	05342-00016	7	1	HEAT SINK, SILICONE	28480	05342-00016
	05342-40001	4	1	DIODE HOLDER	28480	05342-40001

See introduction to this section for ordering information
*Indicates factory selected value

Table 6-3. Replaceable Parts (Continued)

Reference Designation	HP Part Number	C D	Qty	Description	Mfr Code	Mfr Part Number
				CHASSIS PARTS		
B1	3160-0209	4	1	FAN-TBAX 45-CFM 115V 50/60-HZ 1.5-THK	28480	3160-0209
F1	2110-0360	2	1	FUSE .75A 250V SLO-BLO 1.25X.25 UL IEC	75915	313.750
F1	2110-0421	6	1	FUSE .375A 250V SLO-BLO 1.25X.25 UL	75915	313.375
FL1	9135-0042	6	1	FILTER-LINE WIRE LEAD-TERMS	28480	9135-0042
J2	1250-0083	1	4	CONNECTOR-RF BNC FEM SGL-HOLE-FR 50-OHM	28480	1250-0083
J3	1250-0083	1		CONNECTOR-RF BNC FEM SGL-HOLE-FR 50-OHM	28480	1250-0083
J4	1250-0083	1		CONNECTOR-RF BNC FEM SGL-HOLE-FR 50-OHM	28480	1250-0083
J5	1250-0083	1		CONNECTOR-RF BNC FEM SGL-HOLE-FR 50-OHM	28480	1250-0083
MP1	5020-8815	0	1	CASTING, FRONT FRAME	28480	5020-8815
MP2	5020-8816	1	1	CASTING, REAR FRAME	28480	5020-8816
MP3	5020-8837	6	2	STRUT, CORNER	28480	5020-8837
MP4	5001-0423	0	1	TOP COVER	28480	5001-0423
MP5	5061-1940	4	1	BOTTOM COVER	28480	5061-1940
MP6	05342-00001	0	1	PANEL, REAR	28480	05342-00001
MP7	05342-20102	4	1	PANEL, FRONT	28480	05342-20102
MP8	05342-20105	7	1	HOUSING, MAIN	28480	05342-20105
MP9	5001-0439	8	2	TRIM, FRONT SIDE	28480	5001-0439
MP11	5040-7201	8	4	FOOT(STANDARD)	28480	5040-7201
MP12	5040-7203	0	1	TRIM:TOP 1/2	28480	5040-7203
MP13	05342-00002	1	1	PANEL, SUB	28480	05342-00002
MP14	05342-00003	2	1	COVER, CASTING	28480	05342-00003
MP16	05342-00004	3	1	SHIELD, PROTECTIVE	28480	05342-00004
MP17	05342-00005	4	1	SHIELD, RFI	28480	05342-00005
MP18	05342-00008	7	2	BRACKET, MOTHER BOARD	28480	05342-00008
MP19	05342-00010	1	1	PLATE, PATCH (DELETE FOR OPTION 011)	28480	05342-00010
P1	1251-4735	0	1	CONNECTOR 42-PIN PRESSURE TYPE	28480	1251-4735
S1				PART OF A22W7 (LINE SWITCH)		
S2	3103-0056	9	1	SWITCH-THRM FXD +167F 15A OPN-ON-RISE	28480	3103-0056
S3	3101-2306	2	2	SWITCH-SL DPDT-NS STD .5A 125VAC/DC	28480	3101-2306
S4	3101-2306	2		SWITCH-SL DPDT-NS STD .5A 125VAC/DC	28480	3101-2306
U1	5088-7022	1	1	SAMPLER ASSEMBLY	28480	5088-7022
W1	8120-2482	0	1	CABLE ASSY-COAX 5.512-IN-LG	28480	8120-2482
W2	8120-0664	6	1	CABLE ASSY 26AWG 24-CNDCT	28480	8120-0664
W3	05342-60105	1	1	CABLE ASSEMBLY, IF EXT	28480	05342-60105
				MISCELLANEOUS PARTS		
	0370-1005	2	1	KNOB-BASE-PTR 3/8 JGK .125-IN-ID	28480	0370-1005
	0510-0592	8	3	RETAINER-PUSH ON TUB EXT .14-IN-DIA	28480	0510-0592
	0520-0139	0	2	SCREW-MACH 2-56 .875-IN-LG PAN-HD-POZI	00000	ORDER BY DESCRIPTION
	0624-0078	6	2	SCREW-TPG 6-32 .375-IN-LG PAN-HD-POZI	28480	0624-0078
	1400-0015	8	3	CLAMP-CABLE .25-DIA .375-WD STL	28480	1400-0015
	1400-0053	4	1	CLAMP-CABLE .172-DIA .375-WD NYL	28480	1400-0053
	1460-1345	5	2	TILT STAND SST	28480	1460-1345
	2680-0172	1	2	SCREW-MACH 10-32 .375-IN-LG 100 DEG	28480	2680-0172
	3050-0050	0	1	WASHER-FL MTLC 7/16 IN .5-IN-ID	28480	3050-0050
	8120-1378	1	1	CABLE ASSY 18AWG 3-CNDCT JGK-JKT	28480	8120-1378
	5040-7219	8	1	STRAP, HANDLE, CAP-FRONT	28480	5040-7219
	5040-7220	1	1	STRAP, HANDLE, CAP-REAR	28480	5040-7220
	5060-9804	3	1		28480	5060-9804
	05342-00020	3	1	GUARD, CABLE	28480	05342-00020

See introduction to this section for ordering information
*Indicates factory selected value

Table 6-4. Option 001 Replaceable Parts

Reference Designation	HP Part Number	C D	Qty	Description	Mfr Code	Mfr Part Number
A24	10544-60011	3	1	CRYSTAL OSCILLATOR ASSEMBLY	28480	10544-60011

See introduction to this section for ordering information
*Indicates factory selected value

Table 6-5. Option 002 Replaceable Parts

Reference Designation	HP Part Number	C D	Qty	Description	Mfr Code	Mfr Part Number
A16	05342-60038	9	1	AMPLITUDE MEASUREMENT ASSEMBLY (SERIES 1812)	28480	05342-60038
A16C1	0160-3879	7	10	CAPACITOR-FXD .01UF +-20% 100VDC CER	28480	0160-3879
A16C2	0160-3879	7		CAPACITOR-FXD .01UF +-20% 100VDC CER	28480	0160-3879
A16C3	0160-3879	7		CAPACITOR-FXD .01UF +-20% 100VDC CER	28480	0160-3879
A16C4	0160-3879	7		CAPACITOR-FXD .01UF +-20% 100VDC CER	28480	0160-3879
A16C5	0160-3879	7		CAPACITOR-FXD .01UF +-20% 100VDC CER	28480	0160-3879
A16C6	0160-3879	7		CAPACITOR-FXD .01UF +-20% 100VDC CER	28480	0160-3879
A16C7	0160-3879	7		CAPACITOR-FXD .01UF +-20% 100VDC CER	28480	0160-3879
A16C8	0180-0490	4	3	CAPACITOR-FXD 68UF+-10% 6VDC TA	90201	TDC686K006WLF
A16C9	0160-0576	5	15	CAPACITOR-FXD .1UF +-20% 50VDC CER	28480	0160-0576
A16C10	0160-0576	5		CAPACITOR-FXD .1UF +-20% 50VDC CER	28480	0160-0576
A16C11	0160-4401	3	1	CAPACITOR-FXD .01UF +-10% 100VDC POLYP	28480	0160-4401
A16C12	0160-0576	5		CAPACITOR-FXD .1UF +-20% 50VDC CER	28480	0160-0576
A16C13	0180-0491	5	3	CAPACITOR-FXD 10UF+-20% 25VDC TA	28480	0180-0491
A16C14	0160-0576	5		CAPACITOR-FXD .1UF +-20% 50VDC CER	28480	0160-0576
A16C15	0160-0576	5		CAPACITOR-FXD .1UF +-20% 50VDC CER	28480	0160-0576
A16C16	0160-0576	5		CAPACITOR-FXD .1UF +-20% 50VDC CER	28480	0160-0576
A16C17	0180-0491	5		CAPACITOR-FXD 10UF+-20% 25VDC TA	28480	0180-0491
A16C18	0160-0576	5		CAPACITOR-FXD .1UF +-20% 50VDC CER	28480	0160-0576
A16C19	0180-0491	5		CAPACITOR-FXD 10UF+-20% 25VDC TA	28480	0180-0491
A16C20	0160-3879	7		CAPACITOR-FXD .01UF +-20% 100VDC CER	28480	0160-3879
A16C21	0140-0159	8	1	CAPACITOR-FXD 3000PF +-2% 300VDC MICA	72136	DM19F302G0300WV1CR
A16C22	0160-2205	1	1	CAPACITOR-FXD 120PF +-5% 300VDC MICA	28480	0160-2205
A16C23	0160-3704	7	1	CAPACITOR-FXD .015UF +-5% 50VDC	28480	0160-3704
A16C24	0140-0190	7	1	CAPACITOR-FXD 39PF +-5% 300VDC MICA	72136	DM15E390J0300WV1CR
A16C25	0170-0040	9	2	CAPACITOR-FXD .047UF +-10% 200VDC POLYE	56289	292P47392
A16C26	0170-0040	9		CAPACITOR-FXD .047UF +-10% 200VDC POLYE	56289	292P47392
A16C27	0160-0576	5		CAPACITOR-FXD .1UF +-20% 50VDC CER	28480	0160-0576
A16C28	0180-0490	4		CAPACITOR-FXD 68UF+-10% 6VDC TA	90201	TDC686K006WLF
A16C29	0160-0576	5		CAPACITOR-FXD .1UF +-20% 50VDC CER	28480	0160-0576
A16C30	0160-0576	5		CAPACITOR-FXD .1UF +-20% 50VDC CER	28480	0160-0576
A16C31	0180-0490	4		CAPACITOR-FXD 68UF+-10% 6VDC TA	90201	TDC686K006WLF
A16C32	0160-0576	5		CAPACITOR-FXD .1UF +-20% 50VDC CER	28480	0160-0576
A16C33	0160-0576	5		CAPACITOR-FXD .1UF +-20% 50VDC CER	28480	0160-0576
A16C34	0160-0576	5		CAPACITOR-FXD .1UF +-20% 50VDC CER	28480	0160-0576
A16C35	0160-0128	3	1	CAPACITOR-FXD 2.2UF +-20% 50VDC CER	28480	0160-0128
A16C36	0160-3879	7		CAPACITOR-FXD .01UF +-20% 100VDC CER	28480	0160-3879
A16C37	0160-0576	5		CAPACITOR-FXD .1UF +-20% 50VDC CER	28480	0160-0576
A16C38	0160-0576	5		CAPACITOR-FXD .1UF +-20% 50VDC CER	28480	0160-0576
A16C39	0160-3879	7		CAPACITOR-FXD .01UF +-20% 100VDC CER	28480	0160-3879
A16CR1	1901-0040	1	3	DIODE-SWITCHING 30V 50MA 2NS DO-35	28480	1901-0040
A16CR2	1901-0040	1		DIODE-SWITCHING 30V 50MA 2NS DO-35	28480	1901-0040
A16CR3	1901-0731	7	1	DIODE-PWR RECT 400V 1A	28480	1901-0731
A16CR4	1902-0064	1	1	DIODE-ZNR 7.5V 5% DO-7 PD=.4W TC=+.05%	28480	1902-0064
A16CR5	1901-0040	1		DIODE-SWITCHING 30V 50MA 2NS DO-35	28480	1901-0040
A16K1	0490-0617	4	1	RELAY-REED 1C 250MA 28VDC 5VDC-COIL	28480	0490-0617
A16L1	9140-0131	5	2	COIL-MLD 10MH 5% Q=80 .24DX.74LG-NOM	28480	9140-0131
A16L2	9140-0131	5		COIL-MLD 10MH 5% Q=80 .24DX.74LG-NOM	28480	9140-0131
A16Q1	1853-0058	8	5	TRANSISTOR PNP SI PD=300MW FT=200MHZ	07263	S32248
A16Q2	1853-0058	8		TRANSISTOR PNP SI PD=300MW FT=200MHZ	07263	S32248
A16Q3	1853-0058	8		TRANSISTOR PNP SI PD=300MW FT=200MHZ	07263	S32248
A16Q4	1854-0246	8	4	TRANSISTOR NPN SI PD=350MW FT=250MHZ	04713	SPS 233
A16Q5	1854-0246	8		TRANSISTOR NPN SI PD=350MW FT=250MHZ	04713	SPS 233
A16Q6	1854-0246	8		TRANSISTOR NPN SI PD=350MW FT=250MHZ	04713	SPS 233
A16Q7	1853-0058	8		TRANSISTOR PNP SI PD=300MW FT=200MHZ	07263	S32248
A16Q8	1854-0246	8		TRANSISTOR NPN SI PD=350MW FT=250MHZ	04713	SPS 233
A16Q9	1853-0058	8		TRANSISTOR PNP SI PD=300MW FT=200MHZ	07263	S32248
A16Q10	1854-0691	7	3	TRANSISTOR NPN SI TO-92 PD=350MW	28480	1854-0691
A16Q11	1854-0691	7		TRANSISTOR NPN SI TO-92 PD=350MW	28480	1854-0691
A16Q12	1854-0691	7		TRANSISTOR NPN SI TO-92 PD=350MW	28480	1854-0691
A16Q13	1854-0071	7	1	TRANSISTOR NPN SI PD=300MW FT=200MHZ	28480	1854-0071
A16R1	0698-7260	7	9	RESISTOR 10K 1% .05W F TC=0+-100	24546	C3-1/8-T0-1002-G
A16R2	0698-7260	7		RESISTOR 10K 1% .05W F TC=0+-100	24546	C3-1/8-T0-1002-G
A16R3	0757-0399	5	2	RESISTOR 82.5 1% .125W F TC=0+-100	24546	C4-1/8-T0-82R5-F
A16R4	0698-7260	7		RESISTOR 10K 1% .05W F TC=0+-100	24546	C3-1/8-T0-1002-G
A16R5	0698-7260	7		RESISTOR 10K 1% .05W F TC=0+-100	24546	C3-1/8-T0-1002-G
A16R6	0698-7260	7		RESISTOR 10K 1% .05W F TC=0+-100	24546	C3-1/8-T0-1002-G
A16R7	0698-7234	5	1	RESISTOR 825 1% .05W F TC=0+-100	24546	C3-1/8-T0-825R-G
A16R8	0698-7243	6	2	RESISTOR 1.96K 1% .05W F TC=0+-100	24546	C3-1/8-T0-1961-G
A16R9	0698-7252	7	1	RESISTOR 4.64K 1% .05W F TC=0+-100	24546	C3-1/8-T0-4641-G
A16R10	0757-0407	6	1	RESISTOR 200 1% .125W F TC=0+-100	24546	C4-1/8-T0-201-F

See introduction to this section for ordering information
*Indicates factory selected value

Table 6-5. Option 002 Replaceable Parts (Continued)

Reference Designation	HP Part Number	C D	Qty	Description	Mfr Code	Mfr Part Number
A16R11	0698-7243	6		RESISTOR 1.96K 1% .05W F TC=0+-100	24546	C3-1/8-T0-1961-G
A16R12	0698-7236	7	2	RESISTOR 1K 1% .05W F TC=0+-100	24546	C3-1/8-T0-1001-G
A16R13	0757-0418	9	1	RESISTOR 619 1% .125W F TC=0+-100	24546	C4-1/8-T0-619R-F
A16R14	0698-7260	7		RESISTOR 10K 1% .05W F TC=0+-100	24546	C3-1/8-T0-1002-G
A16R15	0757-0399	5		RESISTOR 82.5 1% .125W F TC=0+-100	24546	C4-1/8-T0-82R5-F
A16R16	0698-7236	7		RESISTOR 1K 1% .05W F TC=0+-100	24546	C3-1/8-T0-1001-G
A16R17	0698-7260	7		RESISTOR 10K 1% .05W F TC=0+-100	24546	C3-1/8-T0-1002-G
A16R18	0698-7260	7		RESISTOR 10K 1% .05W F TC=0+-100	24546	C3-1/8-T0-1002-G
A16R19	0698-7260	7		RESISTOR 10K 1% .05W F TC=0+-100	24546	C3-1/8-T0-1002-G
A16R20	0698-7332	4	1	RESISTOR 1M 1% .125W F TC=0+-100	28480	0698-7332
A16R21	2100-3122	9	1	RESISTOR-TRMR 100 10% C SIDE-ADJ 17-TRN	02111	43P101
A16R22	0757-0424	7	1	RESISTOR 1.1K 1% .125W F TC=0+-100	24546	C4-1/8-T0-1101-F
A16R23	0757-0438	3	1	RESISTOR 5.11K 1% .125W F TC=0+-100	24546	C4-1/8-T0-5111-F
A16R24	0698-3154	0	1	RESISTOR 4.22K 1% .125W F TC=0+-100	24546	C4-1/8-T0-4221-F
A16R25	0698-3150	6	1	RESISTOR 2.37K 1% .125W F TC=0+-100	24546	C4-1/8-T0-2371-F
A16R26	2100-3103	6	1	RESISTOR-TRMR 10K 10% C SIDE-ADJ 17-TRN	02111	43P103
A16R27	0698-3084	9	1	RESISTOR 2.15K 1% .125W F TC=0+-100	24546	C4-1/8-T0-2151-F
A16R28	0757-0280	3	1	RESISTOR 1K 1% .125W F TC=0+-100	24546	C4-1/8-T0-1001-F
A16R29	2100-3095	5	1	RESISTOR-TRMR 200 10% C SIDE-ADJ 17-TRN	02111	43P201
A16R30	0757-0422	5	1	RESISTOR 909 1% .125W F TC=0+-100	24546	C4-1/8-T0-909R-F
A16R31	0757-0440	7	2	RESISTOR 7.5K 1% .125W F TC=0+-100	24546	C4-1/8-T0-7501-F
A16R32	0757-0440	7		RESISTOR 7.5K 1% .125W F TC=0+-100	24546	C4-1/8-T0-7501-F
A16R33	0757-0421	4	3	RESISTOR 825 1% .125W F TC=0+-100	24546	C4-1/8-T0-825R-F
A16R34	0698-6619	8	1	RESISTOR 15K .1% .125W F TC=0+-25	28480	0698-6619
A16R35	0757-0421	4		RESISTOR 825 1% .125W F TC=0+-100	24546	C4-1/8-T0-825R-F
A16R36	0698-6362	8	1	RESISTOR 1K .1% .125W F TC=0+-25	28480	0698-6362
A16R37	0757-0421	4		RESISTOR 825 1% .125W F TC=0+-100	24546	C4-1/8-T0-825R-F
A16R38	0698-3155	1	1	RESISTOR 4.64K 1% .125W F TC=0+-100	24546	C4-1/8-T0-4641-F
A16TP1	0360-0535	0	11	TERMINAL TEST POINT PCB	00000	ORDER BY DESCRIPTION
A16TP2	0360-0535	0		TERMINAL TEST POINT PCB	00000	ORDER BY DESCRIPTION
A16TP3	0360-0535	0		TERMINAL TEST POINT PCB	00000	ORDER BY DESCRIPTION
A16TP4	0360-0535	0		TERMINAL TEST POINT PCB	00000	ORDER BY DESCRIPTION
A16TP5	0360-0535	0		TERMINAL TEST POINT PCB	00000	ORDER BY DESCRIPTION
A16TP6	0360-0535	0		TERMINAL TEST POINT PCB	00000	ORDER BY DESCRIPTION
A16TP7	0360-0535	0		TERMINAL TEST POINT PCB	00000	ORDER BY DESCRIPTION
A16TP8	0360-0535	0		TERMINAL TEST POINT PCB	00000	ORDER BY DESCRIPTION
A16TP9	0360-0535	0		TERMINAL TEST POINT PCB	00000	ORDER BY DESCRIPTION
A16TP10	0360-0535	0		TERMINAL TEST POINT PCB	00000	ORDER BY DESCRIPTION
A16TP11	0360-0535	0		TERMINAL TEST POINT PCB	00000	ORDER BY DESCRIPTION
A16U1	1820-1199	1	1	IC INV TTL LS HEX 1-INP	01295	SN74LS04N
A16U2	1820-1144	6	1	IC GATE TTL LS NOR QUAD 2-INP	01295	SN74LS02N
A16U3	05342-80005	2	2	PROM (MATCHED PAIR)	28480	05342-80005
A16U4	1818-0468	0	1	IC NMOS 8192-BIT ROM 450-NS 3-S	18324	8292708 PROGRAMMED
A16U5	1820-1195	7	1	IC FF TTL LS D-TYPE POS-EDGE-TRIG COM	01295	SN74LS175N
A16U6	1820-1439	2	2	IC MUXR/DATA-SEL TTL LS 2-TO-1-LINE	01295	SN74LS258N
A16U7	1820-1439	2		IC MUXR/DATA-SEL TTL LS 2-TO-1-LINE	01295	SN74LS258N
A16U8	1820-1995	5	1	IC 7550 CONV 40-DIP-C	24355	AD7550BD
A16U9	1820-1207	2	1	IC GATE TTL LS NAND 8-INP	01295	SN74LS30N
A16U10	1820-1442	7	1	IC CNTR TTL LS DECD ASYNCHRO	01295	SN74LS290N
A16U11	1826-0316	4	1	IC REF AMPL TO-5	27014	LM0070-1H
A16U12	1826-0471	2	1	IC OP AMP TO-99	06665	OP-07CJ
A16U13	1826-0480	3	2	IC SWITCH 16-DIP-P	27014	LF13333N
A16U14	1820-0477	6	1	IC OP AMP 8-DIP-P	27014	LM301AN
A16U15	1820-0224	1	1	IC OP AMP TO-99	27014	LH0002CH
A16U16	1826-0371	1	1	IC OP AMP TO-99	27014	LF256H
A16U17	1826-0480	3		IC SWITCH 16-DIP-P	27014	LF13333N
A16U18	1826-0472	3	1	IC OP AMP TO-99	27014	LH0044ACH
				A16 MISCELLANEOUS PARTS		
	0360-0065	1	2	TERMINAL-STUD PKD-TUR SWGFRM-MTG	28480	0360-0065
	1200-0424	9	1	SOCKET-IC BLK 14 CONTACT	2388A	CSA2900-148
	1200-0525	1	1	SOCKET-IC 20-CONT DBL STRP DIP-SLDR	28480	1200-0525
	1200-0552	4	1	SOCKET-IC 40-CONT DIP-SLDR	28480	1200-0552
	1200-0565	9	1	SOCKET-IC 24-CONT DIP-SLDR	28480	1200-0565
	5000-9043	6	1	PIN:P.C. BOARD EXTRACTOR	28480	5000-9043
	5040-6852	3	1	EXTRACTOR, ORANGE	28480	5040-6852
	05342-60122	2	1	KIT, WIRES	28480	05342-60122
	0890-0706	0	1	TUBING-HS .093-D/.046-RCVD .02-WALL	28480	0890-0706
	0890-0983	5	1	TUBING-HS .125-D/.062-RCVD .02-WALL	28480	0890-0983
	2200-0155	4	2	SCREW-MACH 4-40 1-IN-LG PAN-HD-POZI	00000	ORDER BY DESCRIPTION
	2190-0005	0	2	WASHER-LK EXT T NO. 4 .116-IN-ID	28480	2190-0005
	0360-0042	4	1	TERMINAL-SLDR LUG PL-MTG FOR-#6-SCR	28480	0360-0042
	1400-0249	0	7	CABLE TIE .062-.625-DIA .091-WD NYL	28480	1400-0249

See introduction to this section for ordering information
*Indicates factory selected value

Table 6-5. Option 002 Replaceable Parts (Continued)

Reference Designation	HP Part Number	C D	Qty	Description	Mfr Code	Mfr Part Number
A27	05342-60027	6	1	LOW FREQUENCY AMPLITUDE MODULE (SERIES 1720)	28480	05342-60027
A27C1	0160-3879	7	5	CAPACITOR-FXD .01UF +-20% 100VDC CER	28480	0160-3879
A27C3	0160-3879	7		CAPACITOR-FXD .01UF +-20% 100VDC CER	28480	0160-3879
A27C4	0160-0576	5	1	CAPACITOR-FXD .1UF +-20% 50VDC CER	28480	0160-0576
A27C4	0160-3879	7		CAPACITOR-FXD .01UF +-20% 100VDC CER	28480	0160-3879
A27C5	0160-3879	7		CAPACITOR-FXD .01UF +-20% 100VDC CER	28480	0160-3879
A27C6	0160-3879	7		CAPACITOR-FXD .01UF +-20% 100VDC CER	28480	0160-3879
A27C7	0160-4082	6	3	CAPACITOR-FDTHRU 1000PF 20% 200V CER	28480	0160-4082
A27C8	0160-4082	6		CAPACITOR-FDTHRU 1000PF 20% 200V CER	28480	0160-4082
A27C9	0160-4082	6		CAPACITOR-FDTHRU 1000PF 20% 200V CER	28480	0160-4082
A27C10	0160-3926	5	1	CAPACITOR-FDTHRU 100PF 20% 200V CER	28480	0160-3926
A27CR1	1901-0639	4	2	DIODE-PIN 110V	28480	5082-3080
A27CR2	1901-0639	4		DIODE-PIN 110V	28480	5082-3080
A27CR3/CR4	1906-0208	3	2	DIODE-SCHOTTKY (MATCHED PAIR)	28480	1906-0208
A27J1	1250-0901	2	2	CONNECTOR-RF SMB M SGL-HOLE-FR 50-OHM	28480	1250-0901
A27J2	1250-0901	2		CONNECTOR-RF SMB M SGL-HOLE-FR 50-OHM	28480	1250-0901
A27R1	0757-0442	9	1	RESISTOR 10K 1% .125W F TC=0+-100	24546	C4-1/8-T0-1002-F
A27R2	0757-0418	9	3	RESISTOR 619 1% .125W F TC=0+-100	24546	C4-1/8-T0-619R-F
A27R3	0757-0418	9		RESISTOR 619 1% .125W F TC=0+-100	24546	C4-1/8-T0-619R-F
A27R4	0757-0418	9		RESISTOR 619 1% .125W F TC=0+-100	24546	C4-1/8-T0-619R-F
A27R5	0757-0401	0	2	RESISTOR 100 1% .125W F TC=0+-100	24546	C4-1/8-T0-101-F
A27R6*	0698-7202	7	1	RESISTOR 38.3 1% .05W F TC=0+-100	24546	C3-1/8-T00-38R3-G
A27R7	0757-0401	0		RESISTOR 100 1% .125W F TC=0+-100	24546	C4-1/8-T0-101-F
A27R8	0698-3435	0	1	RESISTOR 38.3 1% .125W F TC=0+-100	24546	C4-1/8-T0-38R3-F
A27R9	2100-3053	5	1	RESISTOR-TRMR 20 20% C SIDE-ADJ 17-TRN	02111	43P200
A27R10	2100-3095	5	1	RESISTOR-TRMR 200 10% C SIDE-ADJ 17-TRN	02111	43P201
				*FACTORY SELECTED PART		
				A27 MISCELLANEOUS PARTS		
	05342-00015	6	1	COVER	28480	05342-00015
	05342-20110	4	1	HOUSING	28480	05342-20110
U2	05342-80005	2		HF AMP ASSY	28480	05342-80005
W1	8120-2668	4	1	CABLE ASSY	28480	8120-2668
W2	05342-60119	7	1	CABLE ASSY, LF 50	28480	05342-60119
W3	8120-2516	1	1	CABLE ASSY, SEMIRIGID	28480	8120-2516

See introduction to this section for ordering information
*Indicates factory selected value

Table 6-6. Option 003 Replaceable Parts

Reference Designation	HP Part Number	C D	Qty	Description	Mfr Code	Mfr Part Number
A16	05342-60037	8	1	EXTENDED DYNAMIC RANGE ASSEMBLY (SERIES 1720)	28480	05342-60037
A16C1	0180-0490	4	2	CAPACITOR-FXD 68UF+-10% 6VDC TA	90201	TDC686K006WLF
A16C2	0180-0490	4		CAPACITOR-FXD 68UF+-10% 6VDC TA	90201	TDC686K006WLF
A16CR1	1901-0040	1	1	DIODE-SWITCHING 30V 50MA 2NS DO-35	28480	1901-0040
A16Q1	1853-0058	8	2	TRANSISTOR PNP SI PD=300MW FT=200MHZ	07263	S32248
A16Q2	1853-0058	8		TRANSISTOR PNP SI PD=300MW FT=200MHZ	07263	S32248
A16Q3	1854-0246	8	1	TRANSISTOR NPN SI PD=350MW FT=250MHZ	04713	SPS 233
A16R1	0757-0407	6	1	RESISTOR 200 1% .125W F TC=0+-100	24546	C4-1/8-T0-201-F
A16R2	0757-0442	9	3	RESISTOR 10K 1% .125W F TC=0+-100	24546	C4-1/8-T0-1002-F
A16R3	0757-0399	5	2	RESISTOR 82.5 1% .125W F TC=0+-100	24546	C4-1/8-T0-82R5-F
A16R4	0757-0416	9	1	RESISTOR 619 1% .125W F TC=0+-100	24546	C4-1/8-T0-619R-F
A16R5	0757-0442	9		RESISTOR 10K 1% .125W F TC=0+-100	24546	C4-1/8-T0-1002-F
A16R6	0757-0280	3	1	RESISTOR 1K 1% .125W F TC=0+-100	24546	C4-1/8-T0-1001-F
A16R7	0757-0399	5		RESISTOR 82.5 1% .125W F TC=0+-100	24546	C4-1/8-T0-82R5-F
A16R8	0698-3155	1	1	RESISTOR 4.64K 1% .125W F TC=0+-100	24546	C4-1/8-T0-4641-F
A16R9	0757-0442	9		RESISTOR 10K 1% .125W F TC=0+-100	24546	C4-1/8-T0-1002-F
A16R10	0757-0421	4	1	RESISTOR 825 1% .125W F TC=0+-100	24546	C4-1/8-T0-825R-F
A16TP1	0360-0535	0	2	TERMINAL TEST POINT PCB	00000	ORDER BY DESCRIPTION
A16TP2	0360-0535	0		TERMINAL TEST POINT PCB	00000	ORDER BY DESCRIPTION
		9	1			
A16W1	8120-2516	1	1	CABLE ASSY, SEMIRIGID	28480	8120-2516
				A16 MISCELLANEOUS PARTS		
	0890-0706	0	1	TUBING-HS .093-D/.046-RCVD .02-WALL	28480	0890-0706
	05342-60123	3	1	KIT, WIRES	28480	05342-60123
U2	5088-7038			ATTENUATOR ASSEMBLY	28480	5088-7038

1200-1562

5061-0910

See introduction to this section for ordering information
*Indicates factory selected value

Table 6-7. Option 004 Replaceable Parts

Reference Designation	HP Part Number	C D	Qty	Description	Mfr Code	Mfr Part Number
A2	05342-60028	7	1	DISPLAY DRIVER ASSEMBLY (SERIES 1828)	28480	05342-60028
A2C2	0160-3879	7	6	CAPACITOR-FXD .01UF +-20% 100VDC CER	28480	0160-3879
A2C3	0180-0230	0	1	CAPACITOR-FXD 1UF+-20% 50VDC TA	56289	150D105X0050A2
A2C3	0180-0106	9	2	CAPACITOR-FXD 60UF+-20% 6VDC TA	56289	150D606X0006B2
A2C4	0160-3879	7		CAPACITOR-FXD .01UF +-20% 100VDC CER	28480	0160-3879
A2C5	0180-1743	2	1	CAPACITOR-FXD .1UF+-10% 35VDC TA	56289	150D104X9035A2
A2C6	0160-3879	7		CAPACITOR-FXD .01UF +-20% 100VDC CER	28480	0160-3879
A2C7	0160-3878	6	2	CAPACITOR-FXD 1000PF +-20% 100VDC CER	28480	0160-3878
A2C8	0160-3879	7		CAPACITOR-FXD .01UF +-20% 100VDC CER	28480	0160-3879
A2C9	0160-3879	7		CAPACITOR-FXD .01UF +-20% 100VDC CER	28480	0160-3879
A2C10	0180-1714	7	1	CAPACITOR-FXD 330UF+-10% 6VDC TA	56289	150D337X9006B2
A2C12-C15				NOT ASSIGNED		
A2C11	0160-3879	7		CAPACITOR-FXD .01UF +-20% 100VDC CER	28480	0160-3879
A2C16	0180-0106	9		CAPACITOR-FXD 60UF+-20% 6VDC TA	56289	150D606X0006B2
A2C17	0160-3878	6		CAPACITOR-FXD 1000PF +-20% 100VDC CER	28480	0160-3878
A2C18	0160-0573	2	2	CAPACITOR-FXD 4700PF +-20% 100VDC CER	28480	0160-0573
A2C19	0160-0573	2		CAPACITOR-FXD 4700PF +-20% 100VDC CER	28480	0160-0573
A2C20	0160-0570	9	1	CAPACITOR-FXD 220PF +-20% 100VDC CER	28480	0160-0570
A2J2	1250-0257	1	1	CONNECTOR-RF SMB M PC 50-OHM	28480	1250-0257
A2Q1	1854-0560	9	1	TRANSISTOR NPN SI DARL PD=310MW	04713	SP86740
A2R1	0757-0420	3	1	RESISTOR 750 1% .125W F TC=0+-100	24546	C4-1/8-T0-751-F
A2R2	1810-0125	0	1	NETWORK-RES 8-PIN-SIP .125-PIN-SPCG	28480	1810-0125
A2R3	0683-5105	4	1	RESISTOR 51 5% .25W FC TC=-400/+500	01121	CB5105
A2R4	0683-2205	9	8	RESISTOR 22 5% .25W FC TC=-400/+500	01121	CB2205
A2R5	0683-1015	7	2	RESISTOR 100 5% .25W FC TC=-400/+500	01121	CB1015
A2R9	2100-3607	5	1	RESISTOR-VAR CONTROL CCP 1M 10% LIN (Not supplied with 05342-60028, must be ordered separately)	01121	WP4N102P105U2
A2R6	0683-2205	9		RESISTOR 22 5% .25W FC TC=-400/+500	01121	CB2205
A2R7	0683-1025	9	1	RESISTOR 1K 5% .25W FC TC=-400/+600	01121	CB1025
A2R8	0683-2205	9		RESISTOR 22 5% .25W FC TC=-400/+500	01121	CB2205
A2R10	0683-4725	2	11	RESISTOR 4.7K 5% .25W FC TC=-400/+700	01121	CB4725
A2R11	0683-2205	9		RESISTOR 22 5% .25W FC TC=-400/+500	01121	CB2205
A2R12	0683-4725	2		RESISTOR 4.7K 5% .25W FC TC=-400/+700	01121	CB4725
A2R13	0683-2205	9		RESISTOR 22 5% .25W FC TC=-400/+500	01121	CB2205
A2R14	0683-2205	9		RESISTOR 22 5% .25W FC TC=-400/+500	01121	CB2205
A2R15	0683-2205	9		RESISTOR 22 5% .25W FC TC=-400/+500	01121	CB2205
A2R16	0683-2205	9		RESISTOR 22 5% .25W FC TC=-400/+500	01121	CB2205
A2R17	1810-0164	7	1	NETWORK-RES 9-PIN-SIP .15-PIN-SPCG	28480	1810-0164
A2R18	0683-4725	2		RESISTOR 4.7K 5% .25W FC TC=-400/+700	01121	CB4725
A2R19	0683-4725	2		RESISTOR 4.7K 5% .25W FC TC=-400/+700	01121	CB4725
A2R20	0683-4725	2		RESISTOR 4.7K 5% .25W FC TC=-400/+700	01121	CB4725
A2R21	0683-4725	2		RESISTOR 4.7K 5% .25W FC TC=-400/+700	01121	CB4725
A2R22	0683-1015	7		RESISTOR 100 5% .25W FC TC=-400/+500	01121	CB1015
A2R23	0683-4725	2		RESISTOR 4.7K 5% .25W FC TC=-400/+700	01121	CB4725
A2R24	0683-4725	2		RESISTOR 4.7K 5% .25W FC TC=-400/+700	01121	CB4725
A2R25	2100-2655	1	2	RESISTOR-TRMR 100K 10% C TOP-ADJ 1-TRN	73138	82PR100K
A2R26	0683-4725	2		RESISTOR 4.7K 5% .25W FC TC=-400/+700	01121	CB4725
A2R27	2100-2655	1		RESISTOR-TRMR 100K 10% C TOP-ADJ 1-TRN	73138	82PR100K
A2R28	0683-4725	2		RESISTOR 4.7K 5% .25W FC TC=-400/+700	01121	CB4725
A2R29	0683-1035	1	1	RESISTOR 10K 5% .25W FC TC=-400/+700	01121	CB1035
A2R30	0683-1845	1	2	RESISTOR 180K 5% .25W FC TC=-800/+900	01121	CB1845
A2R31	0683-1845	1		RESISTOR 180K 5% .25W FC TC=-800/+900	01121	CB1845
A2R32	0683-2745	2	2	RESISTOR 270K 5% .25W FC TC=-800/+900	01121	CB2745
A2R33	0683-2745	2		RESISTOR 270K 5% .25W FC TC=-800/+900	01121	CB2745
A2R34	0683-3925	2	1	RESISTOR 3.9K 5% .25W FC TC=-400/+700	01121	CB3925
A2R35	0683-4725	2		RESISTOR 4.7K 5% .25W FC TC=-400/+700	01121	CB4725
A2TP1	1251-0600	0	1	CONNECTOR-SGL CONT PIN 1.14-MM-88C-BZ SQ	28480	1251-0600
A2U1	1820-0539	1	2	IC BFR TTL NAND QUAD 2-INP	01295	SN7437N
A2U2	1820-0468	5	2	IC DCDR TTL BCD-TO-DEC 4-TO-10-LINE	01295	SN7445N
A2U3	1820-1443	8	1	IC CNTR TTL LS BIN ASYNCHRO	01295	SN74LS293N
A2U4	1820-0539	1		IC BFR TTL NAND QUAD 2-INP	01295	SN7437N
A2U5	1820-1416	5	1	IC SCHMITT-TRIG TTL LS INV HEX 1-INP	01295	SN74LS14N
A2U6	1820-1049	0	1	IC BFR TTL NON-INV HEX	01295	SN74367N
A2U7	1820-0468	5		IC DCDR TTL BCD-TO-DEC 4-TO-10-LINE	01295	SN7445N
A2U8	1820-1028	5	2	IC-DGTL,64BIT RAM,TTL	01295	SN7189N
A2U9	1820-1144	6	1	IC GATE TTL LS NOR QUAD 2-INP	01295	SN74LS02N
A2U10	1820-1200	5	1	IC INV TTL LS HEX	01295	SN74LS05N
A2U11	1820-1028	5		IC-DGTL,64BIT RAM,TTL	01295	SN7189N
A2U12	1820-1258	9	2	IC BFR TTL NON-INV HEX 1-INP	27014	DM8095N
A2U13	1820-1425	6	1	IC SCHMITT-TRIG TTL LS NAND QUAD 2-INP	01295	SN74LS132N
A2U14	1820-1194	6	3	IC CNTR TTL LS BIN UP/DOWN SYNCHRO	01295	SN74LS193N
A2U15	1820-1216	3	1	IC DCDR TTL LS 3-TO-8-LINE 3-INP	01295	SN74LS138N

See introduction to this section for ordering information
*Indicates factory selected value

Table 6-7. Option 004 Replaceable Parts (Continued)

Reference Designation	HP Part Number	C D	Qty	Description	Mfr Code	Mfr Part Number
A2U16	1820-1254	9		IC BFR TTL NON-INV HEX 1-INP	27014	DM8095N
A2U17	1820-1428	9	1	IC MUXR/DATA-SEL TTL LS 2-TO-1-LINE QUAD	01295	SN74LS158N
A2U18	1820-1112	8	2	IC FF TTL LS D-TYPE POS-EDGE-TRIG	01295	SN74LS74N
A2U19	1820-1112	8		IC FF TTL LS D-TYPE POS-EDGE-TRIG	01295	SN74LS74N
A2U20	1820-1194	6		IC CNTR TTL LS BIN UP/DOWN SYNCHRO	01295	SN74LS193N
A2U21	1820-1194	6		IC CNTR TTL LS BIN UP/DOWN SYNCHRO	01295	SN74LS193N
A2U22	1820-1885	2	1	IC RGTR TTL LS D-TYPE QUAD	27014	DM74LS173N
A2U23	1813-0092	6	1	IC DAC-80 CONV 24-DIP-C	6E175	DAC80-CCD-V
A2W1	05342-60106	2	1	CABLE ASSY, OUTPUT	28480	05342-60106
				A2 MISCELLANEOUS PARTS		
	0380-0336	1	5	SPACER-RVT-ON .312-IN-LG .152-IN-ID	00000	ORDER BY DESCRIPTION
	1200-0565	9	1	SOCKET-IC 24-CONT DIP-SLDR	28480	1200-0565
	1200-0646	7	1	SOCKET-IC 24-CONT DIP-SLDR	28480	1200-0646
	05342-60124	4	1	KIT, WIRES	28480	05342-60124

See introduction to this section for ordering information
*Indicates factory selected value

Table 6-8. Option 011 Replaceable Parts

Reference Designation	HP Part Number	C D	Qty	Description	Mfr Code	Mfr Part Number
A15	05342-60015	2	1	HP-IB ASSEMBLY (SERIES 1720)	28480	05342-60015
A15C1	0160-3879	7	11	CAPACITOR-FXD .01UF +-20% 100VDC CER	28480	0160-3879
A15C2	0160-3879	7		CAPACITOR-FXD .01UF +-20% 100VDC CER	28480	0160-3879
A15C3	0160-3879	7		CAPACITOR-FXD .01UF +-20% 100VDC CER	28480	0160-3879
A15C4	0160-3879	7		CAPACITOR-FXD .01UF +-20% 100VDC CER	28480	0160-3879
A15C5	0160-3879	7		CAPACITOR-FXD .01UF +-20% 100VDC CER	28480	0160-3879
A15C6	0160-3879	7		CAPACITOR-FXD .01UF +-20% 100VDC CER	28480	0160-3879
A15C7	0160-3879	7		CAPACITOR-FXD .01UF +-20% 100VDC CER	28480	0160-3879
A15C8	0160-3879	7		CAPACITOR-FXD .01UF +-20% 100VDC CER	28480	0160-3879
A15C9	0180-0106	9	1	CAPACITOR-FXD 60UF+-20% 6VDC TA	56289	150D606X000682
A15C10	0160-3879	7		CAPACITOR-FXD .01UF +-20% 100VDC CER	28480	0160-3879
A15C12	0160-3879	7		CAPACITOR-FXD .01UF +-20% 100VDC CER	28480	0160-3879
A15C13	0160-3879	7		CAPACITOR-FXD .01UF +-20% 100VDC CER	28480	0160-3879
A15L1	9100-1788	6	1	CHOKE-WIDE BAND ZMAX=680 OHMS 180 MHZ	02114	VK200 20/48
A15R1	0757-0394	0	1	RESISTOR 51.1 1% .125W F TC=0+-100	24546	C4-1/8-T0-51R1-F
A15R2	1810-0164	7	3	NETWORK-RES 9-PIN-SIP .15-PIN-SPCG	28480	1810-0164
A15R3	1810-0164	7		NETWORK-RES 9-PIN-SIP .15-PIN-SPCG	28480	1810-0164
A15R4	1810-0164	7		NETWORK-RES 9-PIN-SIP .15-PIN-SPCG	28480	1810-0164
	0360-0124	3	2	CONNECTOR-SGL CONT PIN .04-IN-BSC-SZ RND	28480	0360-0124
	0360-0124	3		CONNECTOR-SGL CONT PIN .04-IN-BSC-SZ RND	28480	0360-0124
A15U1	1820-1197	9	2	IC GATE TTL LS NAND QUAD 2-INP	01295	SN74L800N
A15U2	1820-1144	6	4	IC GATE TTL LS NOR QUAD 2-INP	01295	SN74L802N
A15U3	1820-1112	8	8	IC FF TTL LS D-TYPE POS-EDGE-TRIG	01295	SN74L874N
A15U4	1820-1112	8		IC FF TTL LS D-TYPE POS-EDGE-TRIG	01295	SN74L874N
A15U5	1820-1144	6		IC GATE TTL LS NOR QUAD 2-INP	01295	SN74L802N
A15U6	1820-1144	6		IC GATE TTL LS NOR QUAD 2-INP	01295	SN74L802N
A15U7	1820-1211	8	1	IC GATE TTL LS EXCL-OR QUAD 2-INP	01295	SN74L86N
A15U8	1820-1144	6		IC GATE TTL LS NOR QUAD 2-INP	01295	SN74L802N
A15U9	1820-1112	8		IC FF TTL LS D-TYPE POS-EDGE-TRIG	01295	SN74L874N
A15U10	1820-1112	8		IC FF TTL LS D-TYPE POS-EDGE-TRIG	01295	SN74L874N
A15U11	1820-1216	3	1	IC DCDR TTL LS 3-TO-8-LINE 3-INP	01295	SN74L8138N
A15U12	1820-1206	1	1	IC GATE TTL LS NOR TPL 3-INP	01295	SN74L827N
A15U13	1820-1199	1	1	IC INV TTL LS HEX 1-INP	01295	SN74L804N
A15U14	1820-1112	8		IC FF TTL LS D-TYPE POS-EDGE-TRIG	01295	SN74L874N
A15U15	1820-0574	4	1	IC RGTR TTL D-TYPE 4-BIT	01295	SN74173N
A15U16	1820-1196	8	1	IC FF TTL LS D-TYPE POS-EDGE-TRIG COM	01295	SN74L8174N
A15U17	1820-1198	0	1	IC GATE TTL LS NAND QUAD 2-INP	01295	SN74L803N
A15U18	1820-1368	6	2	IC DRVR TTL BUS DRVR HEX 1-INP	01295	SN74366N
A15U19	1820-1112	8		IC FF TTL LS D-TYPE POS-EDGE-TRIG	01295	SN74L874N
A15U20	1820-1282	3	2	IC FF TTL LS J-K BAR POS-EDGE-TRIG	01295	SN74L8109N
A15U21	1820-1997	7	3	IC FF TTL LS D-TYPE POS-EDGE-TRIG PRL-IN	34335	SN74L8374PC
A15U22	1820-1689	4	4	IC MISC QUAD	04713	MC3446P
A15U23	1816-1154	9	1	ROM 32 X 8 OC	01295	SN748188N PROGRAMMED
	1200-0473	8	2	SOCKET-IC 16-CONT DIP DIP-SLDR	28480	1200-0473
A15U24	1820-1997	7		IC FF TTL LS D-TYPE POS-EDGE-TRIG PRL-IN	34335	SN74L8374PC
A15U25	1820-1689	4		IC MISC QUAD	04713	MC3446P
A15U26	1816-1155	0	1	ROM 32 X 8 OC	01295	SN748188N PROGRAMMED
	1200-0473	8		SOCKET-IC 16-CONT DIP DIP-SLDR	28480	1200-0473
A15U27	1820-1997	7		IC FF TTL LS D-TYPE POS-EDGE-TRIG PRL-IN	34335	SN74L8374PC
A15U28	1820-1689	4		IC MISC QUAD	04713	MC3446P
A15U29	1820-1282	3		IC FF TTL LS J-K BAR POS-EDGE-TRIG	01295	SN74L8109N
A15U30	1820-1368	6		IC DRVR TTL BUS DRVR HEX 1-INP	01295	SN74366N
A15U31	1820-1689	4		IC MISC QUAD	04713	MC3446P
A15U32	1820-1202	7	1	IC GATE TTL LS NAND TPL 3-INP	01295	SN74L810N
A15U33	1820-0904	4	1	IC COMPTR TTL L MAGTD 5-BIT	07263	93L24PC
A15U34	1820-1112	8		IC FF TTL LS D-TYPE POS-EDGE-TRIG	01295	SN74L874N
A15U35	1820-1112	8		IC FF TTL LS D-TYPE POS-EDGE-TRIG	01295	SN74L874N
A15U36	1820-1197	9		IC GATE TTL LS NAND QUAD 2-INP	01295	SN74L800N
	5000-9043	6	1	PIN;P.C. BOARD EXTRACTOR	28480	5000-9043
	5040-6852	3	1	EXTRACTOR, ORANGE	28480	5040-6852
A29	05342-60029	8	1	HP-IB INPUT ASSEMBLY (SERIES 1720)	28480	05342-60029
A29J1	1251-3283	1	1	CONNECTOR 24-PIN F MICRORIBBON	28480	1251-3283
A29J2	1200-0485	2	1	SKT-IC,14 PIN; PC MTG; RT AGL; CONT	28480	1200-0485
A29S1	3101-1973	7	1	SWITCH-SL 7-1A-NS DIP-SLIDE-ASSY .1A	28480	3101-1973
A29W5	8120-1966	3	1	CABLE ASSY 26AWG 24-CNDCT	28480	8120-1966
				A29 MISCELLANEOUS PARTS		
	0380-0644	4	2	STANDOFF-METRIC SHORT STUD MOUNT; FOR	28480	0380-0644
	1530-1098	4	2	CLEVIS 0.070-IN W SLT; 0.454-IN PIN CTR	00000	ORDER BY DESCRIPTION
	2190-0034	5	2	WASHER-LK HLCL NO. 10 .194-IN-ID	28480	2190-0034
	05342-00017	8	1	PLATE, PATCH	28480	05342-00017

See introduction to this section for ordering information
*Indicates factory selected value

Answers to HP 5342/43A HP-IB questions!!

Jeff Summers

Here is the scenario. You are working on a system with an HP 1000 as a controller. You have on the bus an HP 5343 Microwave Frequency Counter and another instrument, say an HP 3455A DVM. You are minding your own business when you realize that measurements from the 3455A are coming back as garbage characters. Being an expert troubleshooter, you ascertain that the measurement data does get sent to the HP 1000 correctly, it just comes back as garbage. You also observe that the problem comes and goes depending on the physical location on the bus of the 5343A, and you also know that the 5343A is never addressed. What could the answer to this problem be? Are you destined to struggle with this problem for weeks? You begin to break into a cold sweat. Is this some cruel trick that the gods are playing on you? What should you do?

The answer is obvious. You should do what any smart troubleshooter would do. You should read your *Instrument Support News* because the answer to this and other strange problems are there!

Believe it or not this problem actually occurred. It was found that only certain 5343A counters exhibited the problem. It seemed to follow the A15 HP-IB assemblies. After a little searching, we noticed that the difference between the "good" boards and the "bad" boards was the output driver chips, U22, U25, U28, and U31 (HP P/N 1820-1689). The faulty board had Motorola ICs and the good boards had Texas Instrument ICs. The devices are supposedly compatible; however, it appears that the Motorola IC will not sink enough current to bring a line from logic 1 to logic 0 in time for the computer to latch the line to logic 0. The fact that moving the counter around on the bus allows the counter to work in some situations and not in others supports this. The capacitance that the driver sees and subsequently must discharge when the data line goes from logic 1 to logic 0 varies as the counter's position on the bus is changed.

We are now in the process of determining if the Motorola design is faulty or if it is simply a bad lot of devices. Once we have determined the problem with the Motorola parts, we will decide if they should be removed from HP part number 1820-1689. In the meantime, if you have a problem similar to this one on the 5342 or 5343, all you have to do is race to your nearby file cabinet where you keep the old copies of *ISN* handy, pull out this issue, change the chips, and your problem is solved.

Keeping time with oscillator replacements

Joe Hebert

How many times have you found yourself frustrated trying to find a replacement part number for an oscillator? Let me lighten this frustration right now. Thanks to the guiding hand of production engineering, we have been able to compile a rather extensive list of oscillator replacement part numbers. Although this list is not 100 percent complete, I'm sure you will find it to be a handy reference.

Note

Some of the old oscillators have a couple of new part numbers depending on where they are used. When ordering replacements, use the part number that has the same prefix as that of the instrument being repaired.

In addition to knowing replacement part numbers, it is also important to know which oscillators are and are not repairable.

Field repairable

—10811A
—10811B
—10811-60101
—10811-60102
—10811-60105
—10811-60111
—10811-60116

Factory repair only

—10811-60109

Not field repairable

—10811-60211

Old Part Number	Last Sales Replacement	Output(MHz)
00105-6012	00105-6112	5
00105-6012	05360-60139	5
00105-6013	05065-6097	5
00105-6013	05061-6170	5
00105-6033	00105-6112	5
00105-6034	05061-6170	5
00105-6034	05065-6097	5
00105-6034	05360-60139	5
10544A	5061-6001	10
10544B	5061-6002	10
10544C	5061-6003	10
10544-60011	5061-6001	10
10544-60012	5061-6002	10
10544-60013	5061-6003	10
10544-60036	5061-6004	10
10544-60040	5061-6002	10
10544-60041	5061-6003	10
10544-60511	5061-6001	10
10544-60512	5061-6002	10
10544-60513	5061-6003	10
10544-60536	5061-6004	10
00105-6100	00105-6112	5
05061-6168	05061-6170	5
05065-6094	05065-6097	5
05360-60140	05360-60139	5
5243A-69A	05245-60038	1
05245-60036	05245-60038	1

Oscillator parts replacement guide

Table 6-9. Manufacturers Code List

MFG NO.	MANUFACTURER NAME	ADDRESS	ZIP CODE
00000	Any Satisfactory Supplier		
0046G	Norelco North Amer Philips Ltg Corp	Los Angeles, CA	90021
01121	Allen-Bradley Co	Milwaukee, WI	53204
01295	Texas Instr Inc Semiconductor Cmpnt Div	Dallas, TX	75222
0192B	RCA Corp Solid State Div	Somerville, NJ	08876
02111	Spectrol Electronics Corp	City of Ind, CA	91745
02114	Ferroxcube Corp	Saugerties, NY	12477
03508	GE Co Semiconductor Prod Dept	Syracuse, NY	13201
03888	KDI Pyrofilm Corp	Whippany, NJ	07981
04713	Motorola Semiconductor Products	Phoenix, AZ	85062
06665	Precision Monolithics Inc	Santa Clara, CA	95050
07263	Fairchild Semiconductor Div	Mountain View, CA	94042
09023	Cornell-Dubilier Elek Div Fed Pac	Sanford, CA	27330
16546	U.S. Capacitor Corp	Burbank, CA	91504
18324	Signetics Corp	Sunnyvale, CA	94086
19701	Mepco/Electra Corp	Mineral Wells, TX	76067
2388A	No M/F Description for this Mfg No.		
24355	Analog Devices Inc	Norwood, MA	02062
24546	Corning Glass Works (Bradford)	Bradford, PA	16701
25403	Amperex Elek Corp Semicon & MC Div	Slatersville, RI	02876
27014	National Semiconductor Corp	Santa Clara, CA	95051
28480	Hewlett-Packard Co Corporate HQ	Palo Alto, CA	94304
30983	Mepco/Electra Corp	San Diego, CA	92121
34335	Advanced Micro Devices Inc	Sunnyvale, CA	94086
50088	Mostek Corp	Carrollton, TX	75006
56289	Sprague Electric Co	North Adams, MA	01247
72136	Electro Motive Corp Sub IEC	Willimantic, CT	06226
73138	Beckman Instruments Inc Helipot Div	Fullerton, CA	92634
75915	Littelfuse Inc	Des Plaines, IL	60016
8E175	Burr Brown Co	Huntsville, AL	35801
90201	Mallory Capacitor Co	Indianapolis, IN	46206

SECTION VII
MANUAL CHANGES

7-1. INTRODUCTION

7-2. This section contains information necessary to adapt this manual to apply to older instruments.

7-3. MANUAL CHANGES

7-4. This manual applies directly to Model 5342A Microwave Frequency Counters with serial number prefix 1840A.

7-5. As engineering changes are made, newer instruments may have serial prefix numbers higher than those listed on the title page of this manual. The manuals for these instruments will be supplied with MANUAL CHANGES sheets containing the required information. Replace affected pages or modify existing manual information as directed in the MANUAL CHANGES pages. Contact the nearest Hewlett-Packard Sales and Service Office if the change information is missing.

7-6. OLDER INSTRUMENTS

7-7. To adapt this manual to older instruments having a serial prefix lower than 1840A, perform the backdating that applies to your instruments serial prefix as listed in *Table 7-1* below.

Table 7-1. Manual Backdating

If Instrument has Serial Prefix	Make the Following Changes to Manual
1828	1
1812	1,2
1808	1,2,3
1804	1,2,3,4
1720	1,2,3,4,5

CHANGE 1

Page 6-7, Table 6-3, A2 Replaceable Parts:
Change A2 series number from 1828 to 1804.
Delete "A2C20; 0160-0570; CAPACITOR-FXD 220PF 20% 100VDC CER; 28480; 0160-0570".
Change A2R22 from 0683-1015 (100Ω) to "0683-2015; RESISTOR-FXD 200 5% .25 FC TC=-400/+600; 0160G; CB2015".
Change A2U13 from 1820-1425 to "1820-1197; IC GATE TTL LS NAND QUAD 2-INP; 0169H; SN74LS00N".
Change A2U22 from 1820-1885 to "1820-0574; IC FF TTL D-TYPE COM CLEAR QUAD; 0340F; DM855IN".

Page 8-149, Figure 8-24, A1 and A2 Schematic Diagram:
Change A2 series number from "1828" to "1804".
Change the value of resistor A2R22 from 100 to 200 ohms.
Delete capacitor C20 from A2U8, pin 3.

CHANGE 2

Page 6-23, Table 6-3, A14 Replaceable Parts:
Change A14 series number from 1840 to 1812.
Change A14U7 part number from 1818-0706 to 1818-0331. Annotate that the older part number (1818-0331) is obsolete and the new part number (1818-0706) is the recommended replacement.

Page 8-175, Figure 8-37, A14 Schematic Diagram:
Change A14 series number from "1840" to "1812".

CHANGE 3

Page 6-23, Table 6-3, A14 Replaceable Parts:
Change A14 series number from 1812 to 1808.
Delete "A14C28; 0160-3878; CAPACITOR-FXD 1000PF ±20% 100VDC CER; 28480; 0160-3878".

Page 8-175, Figure 8-37, A14 Schematic Diagram:
Delete A14C28 (1000PF) from U11A, pin 3.
Change series number (top of diagram) from "1812" to "1808".

Page 6-23, Table 6-3, A16 Replaceable Parts:
Change A16 part number from 05342-60038 to 05342-60016 in the HP and Mfr part number columns.
Change "(SERIES 1812)" to "(SERIES 1720)".
Delete A16J7; 1200-0424; SOCKET IC BLK 14-CONTACT; 23880; CSA2900-14B.
Change A16J1-J6 Description column from "NOT ASSIGNED" to "CONNECTOR, RF, 28480; 1250-1565"

Page 6-38, Table 6-5, Option 002 Replaceable Parts:
Change A16 part numbers in HP and Mfr part number columns from "05342-60038" to "05342-60016".

NOTE

The 05342-60038 circuit board is electrically identical to the 05342-60016 and uses the same parts except for the six coaxial cables and connector. The two boards are not interchangeable due to the difference in interconnection. The cable differences are listed below.

Delete "A16W1; 8120-2668; CABLE ASSY W/PLUG; 28480; 8120-2668".
Add the following cable assemblies:
05342-60113; CABLE ASSY, GRAY/BLUE; 28480; 05342-60113
05342-60114; CABLE ASSY, GRAY/BROWN; 28480; 05342-60114
05342-60115; CABLE ASSY, GRAY/RED; 28480; 05342-60115
05342-60116; CABLE ASSY, GRAY/ORANGE; 28480; 05342-60116
05342-60117; CABLE ASSY, GRAY/YELLOW; 28480; 05342-60117
05342-60118; CABLE ASSY, GRAY/GREEN; 28480; 05342-60118

Page 6-41, Table 6-6, Option 003 Replaceable Parts:
Change A16 part numbers in HP and Mfr columns from "05342-60037" to "05342-60016".

Page 8-179, Figure 8-39, A16 Schematic Diagram:
Change A16 part number and series number (top of diagram) from "(05342-60038) SERIES 1812" to read "(05342-60016) SERIES 1720".

At left edge of diagram change the pin numbers of connector J7 to J numbers as follows:

CHANGE

FROM J3 Pin Numbers	TO J Number
1 and 14	J1
2 and 13	J2
4 and 11	J5
5 and 10	J6
3 and 12	J4
6 and 9	J3

CHANGE 4

Page 6-23, Table 6-3, A14 Replaceable Parts:
Change the series number from "1808" to "1804".
Change A14R5 from "0698-5426; RESISTOR 10K 10% .125W CC TC=350/+857; 0160G; BB1031" to read "0698-7097; RESISTOR 1M 5% .125W CC TC=-600/+1137; 0160G; BB1055".
Add "A14C25; 0160-3879; CAPACITOR-FXD .01UF +-20% 100VDC CER; 28480; 0160-3879".
Add "A14R22; 0698-5174; RESISTOR 200 5% .125W CC TC=-330/+800; 0160G; BB2015".
Add "A14R23; 0698-5562; RESISTOR 120 5% .125W CC TC=-300/+800; 0160G; BB1215".
Delete "A14R24; 0675-1021; RESISTOR 1K 10% .125W CC TC=-330/+800; 0160G; BB1021".
Delete "A14Q1; 1854-0574; TRANSISTOR, NPN SI PD=500 MIN FT=125 MHz; 28480; 1854-0574".

Page 8-175, Figure 8-37, A14 Schematic Diagram:
Change the series number (top of page) from "1808" to "1804".
Replace the input circuit of U11A (left side of diagram) with the following circuit:

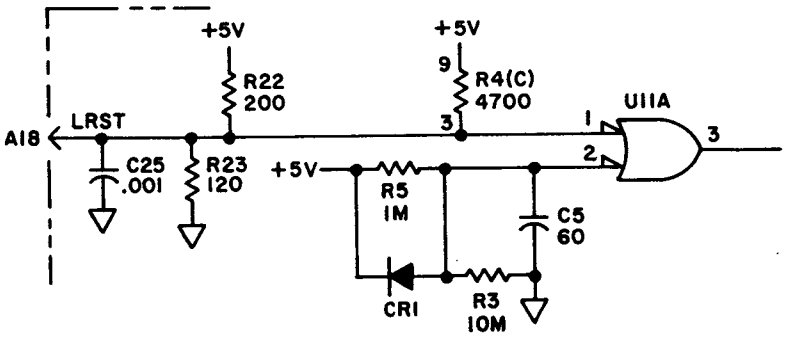

CHANGE 5

Page 6-7, Table 6-3, A2 Replaceable Parts:
Change A2 series number from "1804" to "1720".
Delete "A2C17; 0160-3878; CAPACITOR-FXD 1000PF +-20% 100VDC CER; 28480; 0160-3878".
Delete "A2C18; 0160-0573; CAPACITOR-FXD 4700PF +-20% 100VDC CER; 28480; 0160-0573".
Delete "A2C19; 0160-0573; CAPACITOR-FXD 4700PF +-20% 100VDC CER; 28480; 0160-0573".

Page 8-149, Figure 8-24, A2 Schematic Diagram:
Change A2 series number (top of diagram)from "1804" to "1720".
Delete A2C17 (1000P) from U9, pin 1 (top left part of diagram).
Delete A2C18 and C19 (4700P) from U13, pin 1 (top left part of diagram).

Page 6-8, Table 6-3, A3 Replaceable Parts:
Change A3 series number from "1804" to "1720".
Delete "A3C26; 0160-3878; CAPACITOR-FXD 1000PF +-20% 100VDC CER; 28480; 0160-3878".

Page 8-153, Figure 8-26, A3 Schematic Diagram:
Change A3 series number (top of diagram) from "1804" to "1720".
Delete A3C26 (1000P) from U2 pin 4.

Page 6-30, Table 6-3, A21 Replaceable Parts:
Change A21 series number from "1804" to "1720".
Change A21R14 (215) from 0698-3441 to "0757-0280 RESISTOR 1K 1% .125W F TC=0+-100; 0329B; C4-1/8-TO-1001-F".

Page 8-187, Figure 8-43, A21 Schematic Diagram:
Change A21 series number (top right of diagram) from "1804" to "1708".
Change A21R14 from 215 to 1K.

Page 6-33, Table 6-3, A25 Replaceable Parts:
Change A25 series number from "1804" to "1720".
Delete "A25C35; 0160-3029; CAPACITOR-FXD 7.5PF +-.5PF 100VDC CER; 28480; 0160-0329".
Delete A25C36; 0160-3029; CAPACITOR-FXD 7.5PF +-.5PF 100VDC CER; 28480; 0160-3029".

Page 8-191, Figure 8-45, A25 Schematic Diagram:
Change A25 series number (top of diagram) from "1804" to "1720".
Delete A25C35 (7.5PF) and A25C36 (7.5PF) from junction of R9, R16, and R17.

CHANGE 5 (CONT'D)

Page 6-23, Table 6-3, A14 Replaceable Parts:
Change A14 series number from "1804" to "1720".
Delete A14C25; 0160-3879; CAPACITOR-FXD .01UF +-20% 100VDC CER; 28480; 0160-3879.
Delete A14C26; 0160-3879; CAPACITOR-FXD .01UF +-20% 100VDC CER; 28480; 0160-3879.
Delete A14C27; 0160-0571; CAPACITOR-FXD 470PF +-20% 100VDC CER; 28480; 0160-0571.
Delete A14R22; 0698-5174; RESISTOR 200 5% .125W CC TC=-300/+800; 01607; BB2015.
Delete A14R23; 0698-5562; RESISTOR 120 5% .125W CC TC=-300/+800; 01607; BB1215.
Change A14U1 in both HP part number and Mfr part number columns from "1818-0698" to "1818-0329"
Change A14U4 in both HP part number and Mfr part number columns from "1818-0697" to "1818-0330"

Page 8-94, Table 8-9, A14 Troubleshooting:
Select the signatures as follows:

Signal Name	Location	Signature
LDØ	A14A(3)	AA7C
LD1	A14A(4)	9UH5
LD2	A14A(6)	A4PF
LD3	A14A(6)	F1P9
LD4	A14A(7)	P1P9
LD5	A14A(8)	A0A6
LD6	A14A(9)	312H
LD7	A14A(10)	54C7

Page 8-95, Table 8-9, A14 Troubleshooting:
Select the signature as follows:

Signal Name	Location	Signature
DØ	U3(9)	1PFC
D1	U3(12)	2945
D2	U3(4)	127F
D3	U3(7)	7779
D4	U3(12)	5779
D5	U3(9)	163C
D6	U3(7)	87CH
D7	U3(4)	P227

Page 8-95, Table 8-9, A14 Troubleshooting:
Select the signature obtained when the START and STOP of the 5004A is on R2 test point as follows:

Signal Name	Location	Signature
DØ	U4(23)	FAA3
D1	U4(22)	9597
D2	U4(21)	UHU3
D3	U4(20)	A6A8
D4	U4(19)	196H
D5	U4(18)	24F6
D6	U4(17)	A956
D7	U4(16)	92F1

Page 8-96, Table 8-9, A14 Troubleshooting:
Select the signatures as follows:

Signal Name	Location	Signature
DØ	U1(23)	6000
D1	U1(22)	6P3H
D2	U1(21)	HP60
D3	U1(20)	P686
D4	U1(19)	65P0
D5	U1(18)	A520
D6	U1(17)	P903
D7	U1(16)	H4UC

CHANGE 5 (CONT'D)

Page 8-175, Figure 8-37, A14 Schematic Diagram:
Change A14 series number (top of diagram) from "1804" to "1720".
Delete C26 (1000P) and C27 (470P) from U17(15) to circuit common.
Delete R22 (200Ω) between U11(1) and +5V (left middle of diagram).
Delete C25 (.001) between U11(1) and circuit common.
Delete R23 (120Ω) between U11(1) and circuit common.

Page 6-32, Table 6-3, A24 Replaceable Parts:
Change A24 series number from "1804" to "1432".
Change A24L1 from "9100-2430" to "9140-0179; COIL-MLD 22UH 10% Q=55 .155DX .375LG; 0217B; 15-4445-7J".
Change A24L1 from "9100-2430" to "9140-0179; COIL-MLD 22UH 10% Q=55 .155DX .375LG; 0217B; 15-4445-7J".
Delete "A24C2; 0180-0552; CAPACITOR-FXD 220UF +-20% 10VDC TA; 28480; 0180-0552".

Page 8-189, Figure 8-44, A24 Standard 10 MHz Oscillator Assembly Schematic Diagram:
Change A24 (Standard) series number from 1804 to 1432.
Change L1 from 220UH to 22UH.
Delete C2 (220UF) from L1 to circuit common.

SECTION VIII
SERVICE

8-1. INTRODUCTION

8-2. This section provides service information and symbol descriptions, theory of operation, troubleshooting procedures, and schematic diagrams. The arrangement of content of this section is described in detail below. Refer to the Table of Contents for specific page and paragraph numbers.

a. **Schematic Diagram Symbols and Reference Designations.** Describes the symbols used on schematic diagrams and reference designators used for parts, subassemblies and assemblies.

b. **Identification Markings.** Describes the method used by Hewlett-Packard for identifying printed-circuit boards and assemblies.

c. **Safety Considerations.** Describes the safety considerations applicable during maintenance, adjustments, and repair.

d. **Signal Names.** Lists signal mnemonics, names, source, destination, and function for 5342A signals.

e. **Disassembly and Reassembly Procedures.** Describes removal of covers, front frame, assemblies to gain access to parts.

f. **Factory Selected Components.** Lists procedures for replacement of parts whose values are selected at time of manufacture for optimum performance.

g. **Service Accessory Kit 10842A.** Describes the use and function of kit (extender boards) used for testing pc boards.

h. **Logic Symbols.** Description of logic symbols used on schematics.

i. **Theory of Operation.** Includes block diagram description of overall operation, special function descriptions, and detailed circuit operation explanations.

j. **Assembly Locations.** Describes and illustrates location of assemblies, adjustments, front and rear panel components by reference designators.

k. **Troubleshooting Procedures.** Provides troubleshooting techniques, recommended test equipment, and troubleshooting tables arranged to isolate trouble to an assembly and then to the component level.

l. **Schematic Diagrams.** A diagram for each assembly is included, arranged in order of assembly number. A component locator photo is included adjacent to each diagram. The schematic diagrams contain tables of reference designations, tables of active elements (by part number), voltage measurements and signature analyzer signatures, where applicable.

8-3. SCHEMATIC DIAGRAM SYMBOLS AND REFERENCE DESIGNATORS

8-4. *Figure 8-1* shows the symbols used on the schematic diagrams. At the bottom of *Figure 8-1*, the system for reference designators, assemblies, and subassemblies is shown.

8-5. Reference Designations

8-6. Assemblies such as printed-circuits are assigned numbers in sequence, A1, A2, etc. As shown in *Figure 8-1*, subassemblies within an assembly are given a subordinate A number. For

example, rectifier subassembly A1 has the complete designator of A25A1. For individual components, the complete designator is determined by adding the assembly number and subassembly number if any. For example, CR1 on the rectifier assembly is designated A25A1CR1.

8-7. IDENTIFICATION MARKINGS ON PRINTED-CIRCUIT BOARDS

8-8. HP printed-circuit boards (see *Figure 8-1*) have four identification numbers: an assembly part number, a series number, a revision letter, and a production code.

8-9. The assembly part number has 10 digits (such as 05342-60001) and is the primary identification. All assemblies with the same part number are interchangeable. When a production change is made on an assembly that makes it incompatible with previous assemblies, a change in part number is required. The series number (such as 1720A) is used to document minor electrical changes. As changes are made, the series number is incremented. When replacement boards are ordered, you may receive a replacement with a different series number. If there is a difference between the series number marked on the board and the schematic in this manual, a minor electrical difference exists. If the number on the printed-circuit board is lower than that on the schematic, refer to Section VII for backdating information. If it is higher, refer to the looseleaf manual change sheets for this manual. If the manual change sheets are missing, contact your local Hewlett-Packard Sales and Service Office. See the listing on the back cover of this manual.

8-10. Revision letters (A, B, etc.) denote changes in printed-circuit layout. For example, if a capacitor type is changed (electrical value may remain the same) and requires different spacing for its leads, the printed-circuit board layout is changed and the revision letter is incremented to the next letter. When a revision letter changes the series number is also usually changed. The production code is the four-digit seven-segment number used for production purposes.

SYMBOLS

DANGEROUS VOLTAGE, EXCEEDS 1000 VOLTS

FRONT PANEL LABEL

REAR PANEL LABEL

INTERIOR AND PC BOARDS LABEL

WIPER MOVES TOWARD "CW" WHEN CONTROL IS ROTATED CLOCKWISE

OR PROTECTIVE CONDUCTOR TERMINAL

CIRCUIT COMMON

IDENTIFIED COMMON

OR CHASSIS TERMINAL

KNOB CONTROL

SCREWDRIVER ADJUST

MAIN SIGNAL PATH

FEEDBACK PATH

OR OR TEST POINT

INSTRUCTION MANUAL REFERENCE

ALTERNATING CURRENT

DIRECT CURRENT

ALTERNATING OR DIRECT CURRENT

PRINTED CIRCUIT BOARD IDENTIFICATION

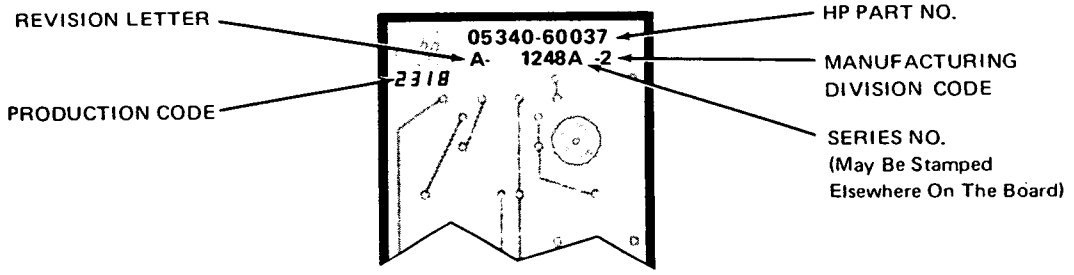

REFERENCE DESIGNATIONS

REFERENCE DESIGNATIONS WITHIN ASSEMBLIES ARE ABBREVIATED. ADD ASSEMBLY NUMBER TO ABBREVIATION FOR COMPLETE DESCRIPTION. JACKS ARE THE STATIONARY CONNECTORS AND PLUGS ARE THE MORE MOVEABLE OF TWO CONNECTORS.

ASSEMBLY	ABBREVIATION	COMPLETE DESCRIPTION
A25	C1	A25C1
A25A1	CR1	A25A1CR1
NO PREFIX	J3	J3

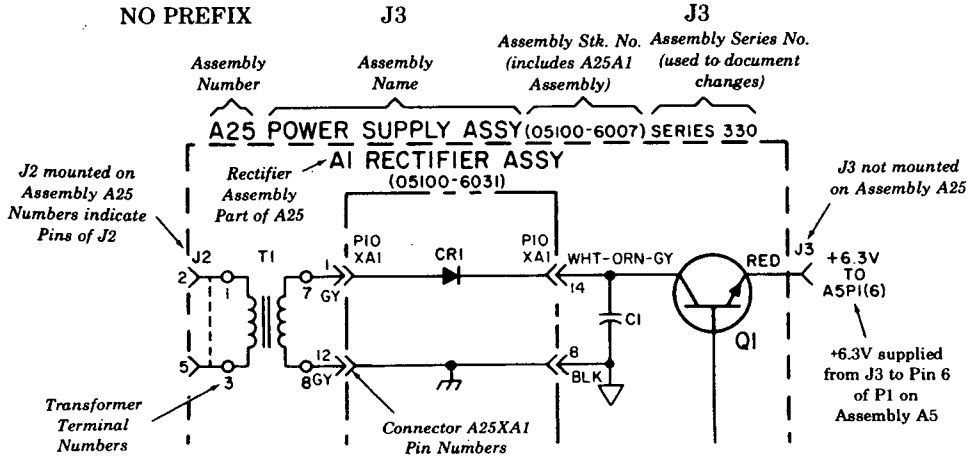

Figure 8-1. Schematic Diagrams Notes

8-11. Assembly Identification

8-12. The assembly number, name, and Hewlett-Packard part number of 5342A assemblies are listed in *Table 8-1*.

Table 8-1. Assembly Identification

ASSEMBLY	NAME	HP PART NO.
A1	Keyboard Display	05342-60001
A2	Display Driver	05342-60002
A2	Option 004 (DAC) Display Driver	05342-60028
A3	Direct Count Amplifier	05342-60003
A4	Offset VCO	05342-60004
A5	RF Multiplexer	05342-60005
A6	Offset Loop Amplifier	05342-60006
A7	Mixer/Search Control	05342-60007
A8	Main VCO	05342-60008
A9	Main Loop Amplifier	05342-60009
A10	Divide-by-N	05342-60010
A11	IF Limiter	05342-60011
A12	IF Detector	05342-60012
A13	Counter	05342-60013
A14	Processor	05342-60014
A15	Option 011 HP-IB	05342-60015
A16	Option 002 Amplitude Measurements	05342-60038
A16	Option 003 Extended Dynamic Range	05342-60037
A17	Timing Generator	05342-60017
A18	Time Base Buffer	05342-60018
A19	Primary Power	05342-60019
A20	Secondary Power	05342-60020
A21	Switch Drive	05342-60021
A22	Motherboard	05342-60022
A23	Power Module	05342-60023
A24	Oscillator	05341-60047
A24	Option 001 Oscillator	10544-60011
A25	Preamplifier	05342-60025
A26	Sampler Driver	05342-60026
U1	Sampler	5088-7022
U2	Option 002 High Frequency Amplitude Module	5088-7035
U2	Option 003 Attenuator	5088-7038
A27	Option 002 Low Frequency Amplitude Module	05342-60027
A29	Option 011 HP-IB Interconnection	05342-60029

8-13. SAFETY CONSIDERATIONS

8-14. Although this instrument has been designed in accordance with international safety standards, this manual contains information, cautions, and warnings which must be followed to ensure safe operation and to retain the instrument in safe condition. Service and adjustments should be performed only by service-trained personnel.

WARNING

ANY INTERRUPTION OF THE PROTECTIVE (GROUNDING) CONDUCTOR (INSIDE OR OUTSIDE THE INSTRUMENT) OR DISCONNECTION OF THE PROTECTIVE EARTH TERMINAL IS LIKELY TO MAKE THE INSTRUMENT DANGEROUS. INTENTIONAL INTERRUPTION IS PROHIBITED.

8-15. Any adjustment, maintenance, and repair of the opened instrument under voltage should be avoided as much as possible and, when inevitable, should be carried out only by a skilled person who is aware of the hazard involved.

8-16. Capacitors inside the instrument may still be charged even if the instrument has been disconnected from its source of supply.

8-17. Make sure that only fuses with the required rated current and of the specified type (normal blow, time delay, etc.) are used for replacement. The use of repaired fuses and the short-circuiting of fuseholders must be avoided.

WARNING

PRIOR TO MAKING ANY VOLTAGE TESTS ON THE A19 PRIMARY POWER ASSEMBLY, THE VOLTMETER TO BE USED OR THE 5342A MUST BE ISOLATED FROM THE POWER MAINS BY USE OF AN ISOLATION TRANSFORMER. A TRANSFORMER SUCH AS AN ALLIED ELECTRONICS, 705-0084 (120V AC) MAY BE USED FOR THIS PURPOSE. CONNECT THE TRANSFORMER BETWEEN THE AC POWER SOURCE AND THE POWER INPUT TO THE 5342A.

8-18. Safety Symbols

8-19. The following safety symbols are used on equipment and in manuals:

Instruction manual symbol. The product will be marked with this symbol when it is necessary for the user to refer to the instruction manual in order to protect against damage to the instrument.

Indicates dangerous voltage (terminals fed from the interior by voltage exceeding 1000 volts must be so marked).

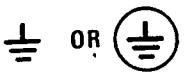

Protective conductor terminal. For protection against electrical shock in case of a fault. Used with field wiring terminals to indicate the terminal which must be connected to ground before operating equipment.

Low-noise or noiseless, clean ground (earth) terminal. Used for a signal common, as well as providing protection against electrical shock in case of a fault. A terminal marked with the symbol must be connected to ground in the manner described in the installation (operating) manual, and before operating the equipment.

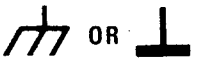

Frame and chassis terminal. A connection to the frame (chassis) of the equipment which normally includes all exposed metal structures.

Alternating current (power line).

Direct current (power line).

Alternating or direct current (power line).

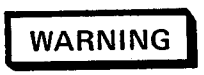

The WARNING signal denotes a hazard. It calls attention to a procedure, practice, or the like, which, if not correctly performed or adhered to, could result in personal injury.

The CAUTION sign denotes a hazard. It calls attention to an operating procedure, practice, or the like, which if not correctly performed or adhered to, could result in damage to or destruction of part or all of the product.

8-20. SIGNAL NAMES

8-21. *Table 8-2* is a list of signal names used in the 5342A. The list is in alphabetical order and includes the mnemonics for cross-reference with the schematic diagram signal names. A description of the function of each signal and the source and destination is included in the table.

Table 8-2. Signal Names

MNEMONIC	NAME	FROM	TO	FUNCTION
AØ	Address Ø	XA14A($\overline{3}$)	XA13($\overline{1}$), XA15A($\overline{3}$), XA16A($\overline{3}$), A22W4(5), A22J1(24)	
A1	Address 1	XA14A($\overline{4}$)	XA13($\overline{2}$), XA15A($\overline{4}$), XA16A($\overline{4}$), A22W4(6), A22J1(23)	
A2	Address 2	XA14A($\overline{5}$)	XA13($\overline{3}$), XA15A($\overline{5}$), XA16A($\overline{5}$), A22W4(9), A22J1(22)	
A3	Address 3	XA14A($\overline{6}$)	XA13A($\overline{4}$), XA15A($\overline{6}$), XA16A($\overline{6}$), A22W4(10), A22J1(10)	
A4	Address 4	XA14A($\overline{7}$)	XA13($\overline{5}$), XA15A($\overline{7}$), XA16A($\overline{7}$), A22W4($\overline{17}$)	
A5	Address 5	XA14A($\overline{8}$)	XA13($\overline{6}$), XA15A($\overline{8}$), XA16($\overline{8}$), A22W4($\overline{18}$)	
A6	Address 6	XA14A($\overline{9}$)	XA15A($\overline{9}$), XA16A($\overline{9}$), A22W4(19)	
A7	Address 7	XA14A($\overline{10}$)	XA15A($\overline{10}$), XA16A($\overline{10}$), A22W4(20)	Address Lines
A8	Address 8	XA14A($\overline{11}$)	XA15A($\overline{11}$), XA16A($\overline{11}$), A22W4(33)	
A9	Address 9	XA14A($\overline{12}$)	XA15A($\overline{12}$), XA16A($\overline{12}$), A22W4(34)	
A10	Address 10	XA14A($\overline{13}$)	XA15A($\overline{13}$), XA16A($\overline{13}$), A22W4(35)	
A11	Address 11	XA14A($\overline{14}$)	XA15A($\overline{14}$), XA16A($\overline{14}$), A22W4(36)	
A12	Address 12	XA14A($\overline{15}$)	XA15A($\overline{15}$), XA16A($\overline{15}$), A22W4(37)	
A13	Address 13	XA14A($\overline{16}$)	XA15A($\overline{16}$), XA16A($\overline{16}$), A22W4(38)	
A14	Address 14	XA14A($\overline{17}$)	XA15A($\overline{17}$), XA16A($\overline{17}$), A22W4(39)	
A15	Address 15	XA14A($\overline{18}$)	XA15A($\overline{18}$), XA16A($\overline{18}$) A22W4(40)	
AMPL ON	Amplitude On	XA16B($\overline{4}$)	U2	Option 002 signal from A16 board to U2 HF Amp to select the amplitude measurement.
AMPL SEL	Amplitude Select	XA16B(4)	A27C7	Optin 002 signal from A16 board to A27 LF Amp to switch from frequency to ampltiude measurement.
AT1 or (ATT)	Attenuation	A25(AT1)	XA16B(3)	Signal from A25 Preamp current source to the A16 curcuits that controls attenuation of RF input signal.

Table 8-2. Signal Names (Continued)

MNEMONIC	NAME	FROM	TO	FUNCTION
CHECK	Check Output	XA10($\overline{11}$)	XA11&7, $\overline{7}$)	75 MHz signal sent from A10 Divide-by-N to A11 IF Limiter when 5342A is in CHECK mode.
CLOCK (CLK)	Clock	XA17(4)	XA14B(8, $\overline{8}$)	1 MHz TTL clock sent from A17 Timing Generator to A14 Microprocessor clock generator to derive Ø1 and Ø2 from MPU.
DIRECT A	Direct Count A Output	XA3(2)	XA13($\overline{7}$)	Divide-by-two output of Direct Count Amplifier Assembly to A13 Counter Assembly.
DIRECT B	Direct Count B Output	XA3($\overline{1}$)	XA13(14)	Divide-by-four output of Direct Count Amplifier Assembly to A13 Counter Assembly.
DIV N	Divide-by-N	XA8($\overline{5}$)	XA10(8)	Signal from A8 Main VCO to A10 Divide-by-N.
DØ	Data Ø	XA14A(3)	XA9($\overline{9}$), XA10(15), XA13(1), XA14A(3), XA15A(3), XA16A(3), XA17(10), A22J1(20), X22W4(11)	Data Lines
D1	Data 1	XA14A(4)	XA10(16), XA13(2), XA17(11), A22J1(19), A22W4(12)	
D2	Data 2	XA14A(5)	XA10(17), XA13(3), XA15A($\overline{5}$), XA16A(5), XA17(12), A22J1(18), A22W4(13)	
D3	Data 3	XA14(6)	XA10(18), XA13(4), XA15A(6), XA16A(6), XA17(13), A22J1(17), A22W4(14)	
D4	Data 4	XA14A(7)	XA10($\overline{15}$), XA12(15, $\overline{15}$), XA15A(7), XA16A(7), XA17(11), A22J1(5), A22W4(15)	
D5	Data 5	XA14A(8)	XA10($\overline{16}$), XA12(16, $\overline{16}$), XA15A(8), XA16A(8), XA17(10), A22J1(6), A22W4(16)	
D6	Data 6	XA14A(9)	XA10($\overline{17}$), XA12(17, $\overline{17}$) XA15A(9), XA16A(9), XA17(9), A22J1(7), A22W4(23)	
D7	Data 7	XA14A(10)	XA10($\overline{18}$), XA12(18, $\overline{18}$), XA15A(10), XA16A(10), XA17($\overline{8}$), A22J1(8), A22W4(24)	
EXT IN	External Input	J2 (rear panel)	XA18($\overline{10}$)	Signal from an external source via J2 on rear panel to A18 Time Base Buffer Assembly
FREQ ON	Frequency On	XA16B($\overline{3}$)	U2	Option 002 signal from A16 board to U2 HF Amp to select frequency measurement.

Table 8-2. Signal Names (Continued)

MNEMONIC	NAME	FROM	TO	FUNCTION
HECL RST (HECLR)	High ECL Reset	XA13($\overline{10}$)	XA3(4)	High signal from A13 Counter Assembly that resets the main gate on A3 Direct Count Amplifier Assembly.
HDSP WRT (HDSP)	High Display Write	XA14B(10)	XA2(3)	High signal from A14 Microprocessor causes data from bus to be written into RAM on A2 Display Driver. When signal goes low, contents of RAM are displayed.
HSRCH EN	High Search Enable	XA7(2)	XA6(8)	High signal from 500 kHz detector on A7 sent to Search Generator on A6 if the offset VCO frequency is not 500 kHz less than the main VCO frequency.
IF	Intermediate Frequency	A25J1	XA11($\overline{1}$), via A22W3	A25 Preamplifier output to A11 IF Limiter Assembly.
IF COUNT	Intermediate Frequency to Counter	XA12(8)	XA13(7)	A12 IF Detector output to A13 Counter Assembly
IF LIM	Intermediate Frequency Limiter Output	XA11($\overline{12}$)	XA12($\overline{1}$)	A11 IF Limiter output to A12 IF Detector Assembly.
IF OUT	Intermediate Frequency Output	A25J2	J4 (rear panel) via W3	A25 Preamplifier intermediate frequency output to rear panel connector.
ISOLATOR	Optical Isolator	XA19(18, $\overline{18}$)	XA20(15, $\overline{15}$), XA21(17, $\overline{17}$)	Signals excessive current load to the U3 Timer Overcurrent shutdown circuit.
LAMPEN (Option 002)	Low Amplitude Enable	XA16B(1)	XA14B($\overline{2}$)	Signal from A16 Amplitude Assembly to notify A14 Microprocessor that Option 002 is present.
LAMP MTR (Option 002)	Low Amplitude Meter	XA14B($\overline{13}$)	XA16B(2)	Signal from A14 Microprocessor Assembly to write data or read data from Option 002 A16 Amplitude Assembly.
LCTR RD	Low Counter Read	XA14B(2)	XA13(6)	Signal from A14 Microprocessor to A13 Counter Multiplexer circut to read contents of A or B counter to the data bus (depending upon the state of the A5 line).
LCTR WRT	Low Counter Write	XA14B(3)	XA13(7)	Signal from A14 Microprocessor to A13 Counter FF circuit that selects either IF or Direct B to be counted.
LDA	Low Digital-to-Analog	XA14B($\overline{3}$)	XA2U15(4, 5)	Signal from A14 Microprocessor that loads data into U15 Buffer register on A2 board (Option 004) for conversion to analog.

Table 8-2. Signal Names (Continued)

MNEMONIC	NAME	FROM	TO	FUNCTION
LDIRECT	Low Direct	XA13($\overline{14}$)	XA16B($\overline{7}$)	Signal from A13 Counter that switches A27 LF Amp or U2 HF Amp to A16 board measurement circuits.
LDIR Gate	Low Direct Gate	XA17($\overline{4}$)	XA3(5)	Low signal from A17 Timing Generator that enables the direct count main gate on A3 Direct Count Amplifier Assembly.
LDVRST	Low Device Reset	XA14B(4)	XA2J1(9)	Temporary low signal from A14 Microprocessor to A2 Display that blanks the display during power up.
LEXT	Low External	S4 (rear panel)	XA18(9)	Low signal from rear panel switch (EXT/INT) in EXT position that selects external oscillator input to A18 Time Base Buffer instead of internal oscillator.
LFM	Low Frequency Modulation	S3 (rear panel)	XA17($\overline{12}$)	Low signal from rear panel switch (CW/FM) in FM position that selects long prs and illuminates FM indicator on display.
LFRERUN (LFRUN)	Low Free Run	XA14B($\overline{1}$)	A14S2 (Ground)	Low signal cause MPU on A14 Microprocessor to continuously increment the addresses on the address bus (for diagnostic purposes).
LHP-IB	Low HP Interface Bus	XA14B($\overline{14}$)	XA15B(6)	Low signal from decoder on A14 Microprocessor to enable reading from and writing to A15 HP-IB (Option 011).
LIF Gate	Low Intermediate Frequency Gate	XA17($\overline{5}$)	XA13(16)	Low signal from A17 Timing Generator that enables counter A or B on A13 Counter Assembly (depending upon the state of the LO switch signal).
LIRQ	Low Interrupt Request	XA2J1(1)	XA14A(13)	Low signal from A2 Display Driver or HP-IB Option 011 that interrupts A14 Microprocessor.
LKBRD (LKBR)	Low Keyboard	XA14B(9)	XA2(4)	Low signal enables A2 Display Driver to send keyboard information to A14 Microprocessor.
LO FREQ	Local Oscillator Frequency	A4W1	A26J2	A5 Multiplexer Local Oscillator output to A26 Sampler Driver.

Table 8-2. Signal Names (Continued)

MNEMONIC	NAME	FROM	TO	FUNCTION
LO Switch	Local Oscillator Switch	XA17($\overline{1}$)	XA5($\overline{5}$), XA13($\overline{8}$)	Low signal from A17 Timing Generator that switches A5 Multiplexer between Main VCO and Offset VCO synchronously with switching between Counter A and B on A13 Counter Assembly.
LOVL (OL)	Low Overload	A25C29	XA12(14)	Low signal from A25 Preamplifier ampltiude detector to A12 IF Detector bus driver to indicate input signal level to 5342A exceeds +5 dBm (or 20 dBm).
LPD READ (LPDRD)	Low Power Detect Read	XA14B($\overline{9}$)	XA12($\overline{13}$)	Low signal from A14 Microprocessor to A12 IF Detector that causes A12 to output data to the bus.
LPD WRT	Low Power Detect Write	XA14B($\overline{10}$)	XA12($\overline{14}$), XA9(9)	Low signal from A14 Mircoprocessor to A12 IF Detector that causes A12 to detect input signal power level. When high, selects narrow or wide filter on A9 Main Loop Amplifier, depending upon the state of data bit DØ.
LPOS SLOPE (LPOS SL)	Low Positive Slope	XA6($\overline{8}$)	XA7($\overline{2}$)	Low signal from A6 Search Generator to A7 Mixer/ Search Control prevents loop from locking on upper sideband when offset VCO is 500 kHz greater than main VCO.
LPWR RST (Option 002)	Low Power Reset	XA11(4, $\overline{4}$)	A25C34	Reset signal from A11 IF Limiter to A25 Preamplifier amplitude detector.
LTIM RD (LTMRD)	Low Timing Read	XA14B($\overline{6}$)	XA17(8)	Low signal from A14 Microprocessor that results in data transfer from A17 Timing Generator to A14 via the data bus.
LTIM WRT (LTMWRT)	Low Timing Write	XA14B($\overline{7}$)	XA17(9)	Low signal from A14 Microprocessor that clocks data into the Input Register on A17 Timing Generator.
LSYNHI (LSYH)	Low Synch High	XA14B($\overline{11}$)	XA10($\overline{14}$)	Low to high transition from A14 Microprocessor decoder that loads the high order bits into the N register on the A10 Divide-by-N Assembly.

Table 8-2. Signal Names (Continued)

MNEMONIC	NAME	FROM	TO	FUNCTION
LSYNLO (LSYL)	Low Synch Low	XA14B($\overline{12}$)	XA10(14)	Low to high transition from A14 Microprocessor decoder that loads low order bits into N register.
LXROM	Low External ROM	XA15A(16), XA16A(16)	XA14A(16)	Not used.
MAIN $\Delta\phi$1	Main Phase Error 1	XA10(1)	XA9(12)	Phase error signals from A10 Divide-by-N assembly to A9 Main Loop Amplifier that control the A8 Main Main VCO.
MAIN $\Delta\phi$2	Main Phase Error 2	XA10($\overline{1}$)	XA9($\overline{12}$)	
MAIN CTRL	Main Control	XA9(6)	XA8(1)	Control voltage signal from A9 Main Loop Amplifier that controls the frequency of the A8 Main VCO.
MAIN OSC	Main Oscillator	XA8(7)	XA5(10)	A8 Main VCO output to A5 RF Multiplexer Assembly.
MAIN VCO	Main Voltage Controlled Oscillator	XA8(3)	XA7(12)	A8 Main VCO output to A7 Mixer/Search Control Assembly that is mixed with the signal from A4 Offset VCO.
OFFSET $\Delta\phi$1	Offset Phase 1	XA7(1)	XA6(10)	A7 Mixer/Search Control outputs that are processed by A6 Offset Loop Amplifier to develop OFFSET CONTROL signal.
OFFSET $\Delta\phi$2	Offset Phase 2	XA7($\overline{1}$)	XA6($\overline{10}$)	
OFS CNTRL	Offset Control	XA6(6)	XA4(5)	A dc control voltage signal from A6 Offset Loop Amplifier to A4 Offset VCO Assembly.
OFS OSC	Offset Oscillator	XA4(10)	XA5(1)	A4 Offset VCO output to A5 RF Multiplexer Assembly.
OFS VCO	Offset Voltage Controlled Oscillator	XA4($\overline{7}$)	XA7(9)	A7 Offset VCO output to A7 Mixer/Search Control Assembly.
500 kHz	500 kilohertz	XA18(3)	XA7($\overline{7}$), XA10(5, $\overline{5}$)	500 kHz signal from A18 Time Base to the phase detector on A7 and to ÷10 circuit on A10 Divide-by-N Assembly.
1 MHz	1 Megahertz	XA18(1)	XA12($\overline{10}$), XA17(6)	1 MHz signal from A18 Time Base to A12 IF Detector and to the prs generator on A17 Timing Generator.
10 MHz OUT	10 Megahertz Out	XA18(5)	J3 (rear panel)	10 MHz signal from A18 Time Base to FREQ STD OUT connector on rear panel.

8-22. DISASSEMBLY AND REASSEMBLY

8-23. Before performing any of the following disassembly or reassembly procedures, the following steps must be performed.

a. Set LINE ON-STBY switch to STBY position.

b. Remove line power cable from Input Power Module (A23).

8-24. Top Cover Removal

8-25. To remove the top cover proceed as follows:

a. Place 5342A with top cover facing up.

b. At top rear of instrument remove pozidrive screw from rear cap retainer and remove retainer.

c. Slide top cover back until free from frame and lift off.

d. To gain access to pc assemblies remove screws from top plate and remove plate.

8-26. Bottom Cover Removal

8-27. To remove the bottom cover proceed as follows:

a. Place 5342A with bottom cover facing up.

CAUTION

In the following step, the two front plastic feet must be removed from the bottom panel to avoid damage to internal wiring.

b. Remove two front plastic feet from bottom cover. Lift up on back edge of plastic foot and push back on front edge of plastic foot to free foot from bottom cover.

c. Loosen captive pozidrive screw at rear edge of bottom cover.

d. Slide bottom cover back until it clears the frame. Reverse the procedure to replace the cover.

8-28. FRONT FRAME REMOVAL

8-29. To remove front frame from main housing of the instrument, proceed as follows:

a. Remove top and bottom covers as described in preceding paragraphs.

b. Remove nut from type N connector on front panel.

c. Remove two screws from front of each side strut attaching front panel frame.

d. From bottom front of instrument, remove coax cable by pulling off connectors from A1J1 and A1J3. Remove cable strap connector from A2 Display Driver board. Note orientation of connector pins for reference during reassembly.

CAUTION

In the following step, note the cable attached to the power LINE switch and avoid stress on cable connections during removal of front panel frame.

e. Slowly slide front panel frame off while pressing type N connector rearward through panel.

f. The front panel frame (containing assemblies A1 and A2) can now be moved freely within limits of the power cable, as shown in *Figure 8-2*.

8-30. Removal of A1 Display Assembly and A2 Display Drive Assembly from Front Panel Frame

8-31. To remove A1 and A2 assemblies, remove frame as described in above paragraph and proceed as follows:

a. Remove the A1-A2 assemblies (combined) from front panel frame by removing the nut from the front panel BNC connector and removing the 5 large attaching screws from A2 Display Driver board.

b. Separate the A1 and A2 assemblies by removing the two nuts attaching plug P1 on the A1 Display assembly. Do not remove the attached screws from A2 Display Driver assembly.

c. Reassembly procedures are essentially the reverse of the disassembly procedures.

8-32. Replacement of LED's in Front Panel Switches

8-33. To replace a defective LED in a front panel pushbutton switch, remove and separate the A1 and A2 boards as described in the preceding paragraphs, and proceed as follows:

a. Pull off the switch cap that covers the defective LED.

b. Use a short length (approximately 2 inches) of heat-shrink tubing that will fit over the replacement LED. Apply heat to the tubing to make a tight fit.

c. Unsolder the connections to the defective LED on the A1 board. Slide the heat-shrink tubing over the defective LED and withdraw.

d. Place the replacement LED into the heat-shrink tubing and insert into the switch. Solder the leads to the board.

8-34. Removal of U1 Sampler, A25 Preamplifier, and A26 Sampler Driver

8-35. Remove U1, A25, and A26 as follows:

a. Remove 5342A bottom panel by loosening screw at rear, remove two front feet and slide panel rearward.

b. Refer to *Figure 8-22* and locate assemblies at bottom front of instrument.

c. Pull off coax cables from A1J1, A1J3, A25J1 (IF OUT INT), and A25J2 (IF OUT EXT).

d. Disconnect rigid coax from U1 Sampler by loosening attaching nut.

e. Remove nut on front panel type N connector and remove rigid cable to allow access.

f. Remove W2 cable strap connector at A22 motherboard and move cable strap to one side to allow access.

g. Remove 5 screws attaching A25 mounting bracket (four corner and one middle screw) and withdraw bracket (and attached assemblies) from intrument.

h. Remove A26 from bracket by removing the 2 small attaching bolts and nuts. Separate A26 from U1 by loosening the interconnecting hex connector from U1. Remove the cover from A26 to gain access to components.

i. Remove U1 by removing one small bolt and nut. Pull U1 up out of socket.

j. Assembly procedures are essentially the reverse order of the disassembly.

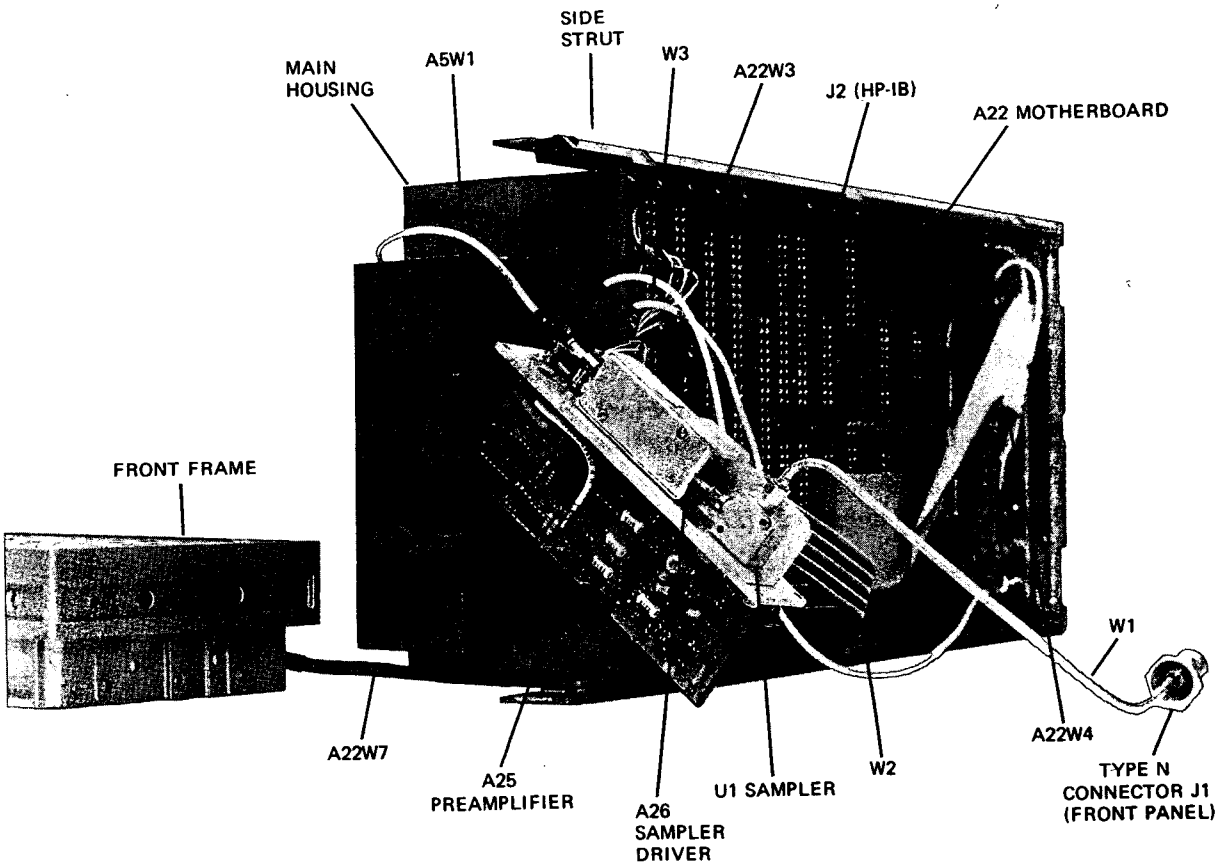

Figure 8-2. Front Frame, A25, A26, and U1 Removal

8-36. FACTORY SELECTED COMPONENTS

8-37. Some component values are selected at the time of final checkout at the factory. These values are selected to provide optimum compatibility with associated components and are identified on schematics and parts lists by an asterisk (*). The recommended procedure for replacing a factory-selected part is as follows:

a. Refer to paragraphs 8-38 through 8-45 for test procedures required for selection of critical value parts.

b. For factory selected components that are not listed in paragraphs 8-38 through 8-45, use the original value.

c. After replacing parts, perform the test specified for the circuit in the performance and adjustment sections of this manual to verify correct operation.

8-38. Procedure for Selecting Resistor R15 on Direct Count Amplifier A3

8-39. If resistor A3R15 is not properly selected for value (average value 42.2 ohms), the 5342A may exhibit a miscount at the low frequency direct count input for frequencies near 500 MHz. To properly select A3R15, perform the following:

a. Set the 5342A to the 10 Hz—500 MHz RANGE and select 1 kHz RESOLUTION.

b. With assembly A3 on an extender board, monitor A3U4(14) with an oscilloscope.

c. The signal at A3U4(14) must go positive by 100 mV (±25 mV).

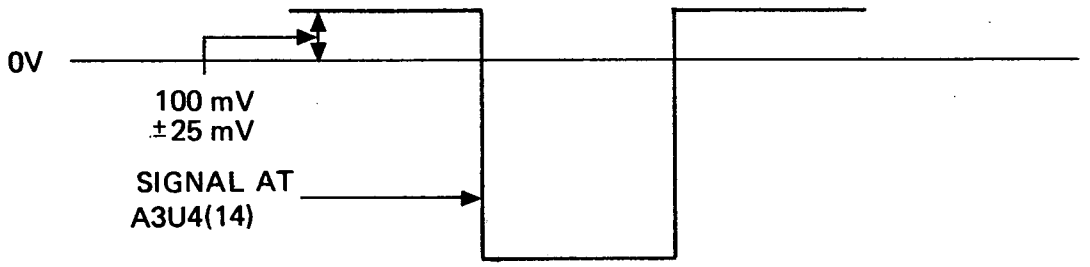

d. To determine the value of A3R15, first decide how much the actual upper voltage level at A3U4(14) must change in order to fall between +75 mV to +125 mV. For every 5 mV increase required, the value of A3R15 must be increased by 1 ohm and for every 5 mV decrease, the value of A3R15 must be decreased by 1 ohm. For example, if the actual voltage only goes positive by 25 mV, then a 75 mV increase is required. Increase A3R15 by 15Ω.

e. Use a 1%, 0.125W resistor for A3R15. The following are HP part numbers for resistors which may be used.

Value	Part No.
61.9Ω	0757-0276
56.2Ω	0757-0395
51.1Ω	0757-0394
46.4Ω	0698-4037
42.2Ω	0757-0316
38.3Ω	0698-3435
34.8Ω	0698-3434
31.6Ω	0757-0180
28.7Ω	0698-3433

8-40. Procedure for Selecting Resistor R16 and Capacitor C10 on Direct Count Amplifier A3

8-41. If resistor A3R16 and capacitor A3C10 are not the proper value, the 5342A will exhibit miscount at low levels for frequencies near 10 Hz at the high impedance direct count input. This miscount is caused by leakage of the 300 MHz synthesizer frequency into the low frequency input. To select A3R16 and A3C10, perform the following:

a. With the 5342A set to the 10 Hz—500 MHz range, impedance select set to 1 MΩ, 1 Hz resolution, apply a 10 Hz signal at a level of 50 mV rms. If the counter properly counts 10 Hz, leave A3R16 at 51Ω (0698-3378) and A3C10 at 2.2 pF (0160-3872).

b. If the counter miscounts change A3R16 to 510Ω (0698-5176) and change A3C10 to 10 pF (0160-3874).

8-42. Procedures for Selecting Resistor R16 on Main Loop Amplifier A9

8-43. Whenever a repair is made in the main synthesizer loop consisting of assemblies A9, A8, and A10, it may be necessary to change the value of resistor A9R16. If A9R16 is not the proper value, the counter will miscount at high frequencies. This miscount will be independent of input signal level. Start with A9R16 equal to 10 MΩ (HP P/N 0683-1565) and test as follows:

a. Test setup:

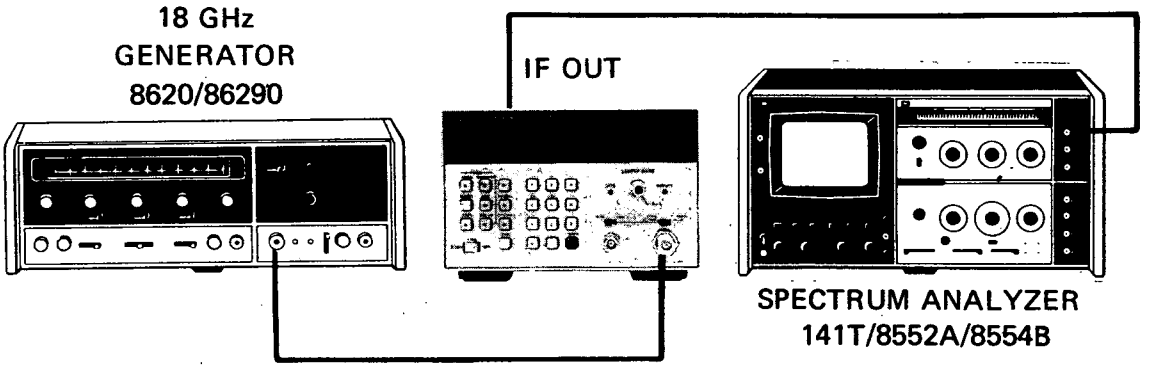

b. Set the signal generator to 18 GHz and approximately -10 dBm. Place the 5342A to AUTO and observe 18 GHz count.

c. Set 5342A to MANUAL and observe the 5342A rear panel IF OUT on the spectrum analyzer. Set spectrum analyzer SCAN WIDTH to 5 MHz and observe the following:

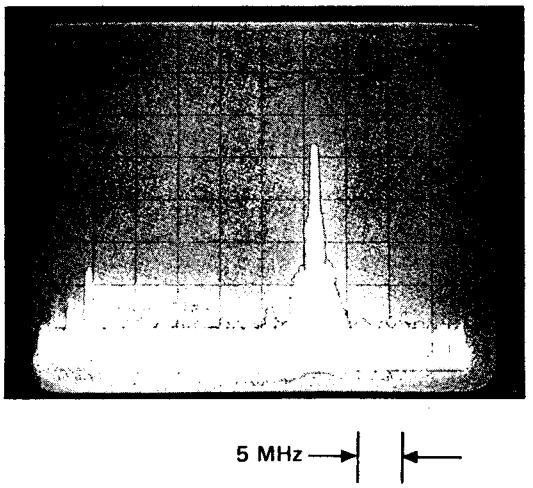

d. Reduce input signal level until counter no longer counts 18 GHz but displays all zeros. The IF OUT on the spectrum analyzer should appear as:

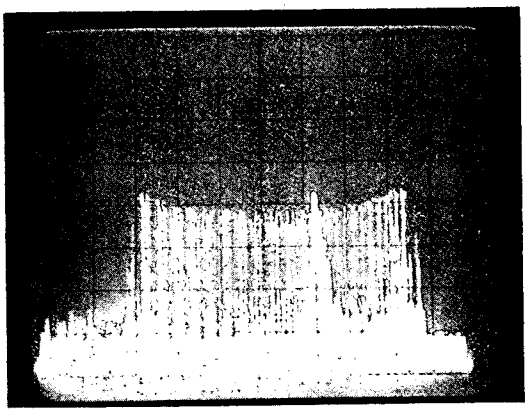

e. If the spectrum analyzer display remains as in the first photo, or if the IF is centered as shown below, then change A9R16 to 15 MΩ (0683-1565).

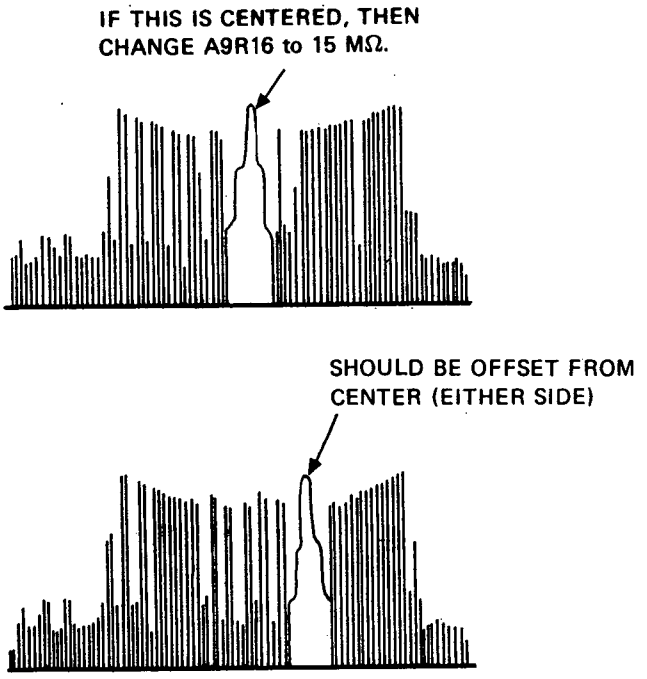

8-44. Procedure for Selecting Resistor A16R2 on A16 Assembly (Option 002 or 003)

8-45. When replacing resistor A16R2 (average value 10K ohms) select the original factory selected value that is labeled on U2 assembly (part of Option 002 or 003).

8-46. SERVICE ACCESSORY KIT 10842A

8-47. The 10842A Service Accessory Kit contains 10 special extender boards (*Figure 8-3*) designed to aid in troubleshooting the 5342A. The following paragraphs describe equipment supplied, replaceable parts and operation.

8-48. Equipment Supplied

8-49. *Table 8-3* lists the boards contained in the 10842A Service Accessory Kit with their general description and usage. The kit is shown in *Figure 8-3.*

Table 8-3. 10842A Kit Contents

HP PART NO.	QTY.	DESCRIPTION FOR USE
05342-60030	1	10 pin X2 Extender Boards for A4, A5, A6, and A18 assemblies.
05342-60031	1	12 pin X2 Extender Boards for A3, A7, A8, A9, and A11 assemblies.
05342-60032	1	15 pin X2 Extender Boards for the A24 assembly.
05342-60033	2	18 pin X2 Extender Boards for the A17 assembly.
05342-60034	2	22 pin X2 Extender Boards for A10, A12, A13, A20, A21 assemblies.
05342-60035	1	24 pin X2 Extender Boards for the A19 assembly.
05342-60036	1	Double 18 pin X2 Extender Boards for the A14 assembly.
05342-60039	1	Keyed double 18 pin X2 Extender Boards for the A15 HP-IB assembly.
NOTE For the Option 002 and 003 A16 assembly, use one 05342-60030 (10 pin X2) Extender Board and one 05342-60033 (18 pin X2) Extender Board.		

8-50. Replaceable Parts

8-51. The only replaceable parts in the 10842A kit are the two integrated circuits and five switches on the 05342-60036 extender board. *Table 8-4* lists the HP part number and description of those parts. Refer to Section VI for ordering information.

Table 8-4. Replaceable Parts for Extender Board 05342-60036

Ref. DESIG.	HP PART NO.	QTY.	DESCRIPTION	Mfr. CODE	MFR PART NO.
U1	1820-1197	1	IC GATE TTL LS NAND QUAD 2-INPUT	01698	SN74LS00N
U2	1820-1281	1	IC DCDR TTL LS 2-TO-4-LINE DUAL 2-INPUT	01698	SN74LS139N
S1	3101-1856	1	SWITCH-SL-8-1A-NS DIP-SLIDE-ASSY .1A	28480	3101-1856
S2	3101-1856	1	SWITCH-SL-8-1A-NS DIP-SLIDE-ASSY .1A	28480	3101-1856
S3	3101-1856	1	SWITCH-SL 8-1A-NS DIP-SLIDE-ASSY .1A	28480	3101-1856
S4	3101-1213	1	SWITCH-TGL SUBMIN DPST .5A 120VAC PC	28480	3101-1213
S5	3101-1675	1	SWITCH-TGL SUBMIN DPST .5A 120VAC/ DC PC	28480	3101-1675

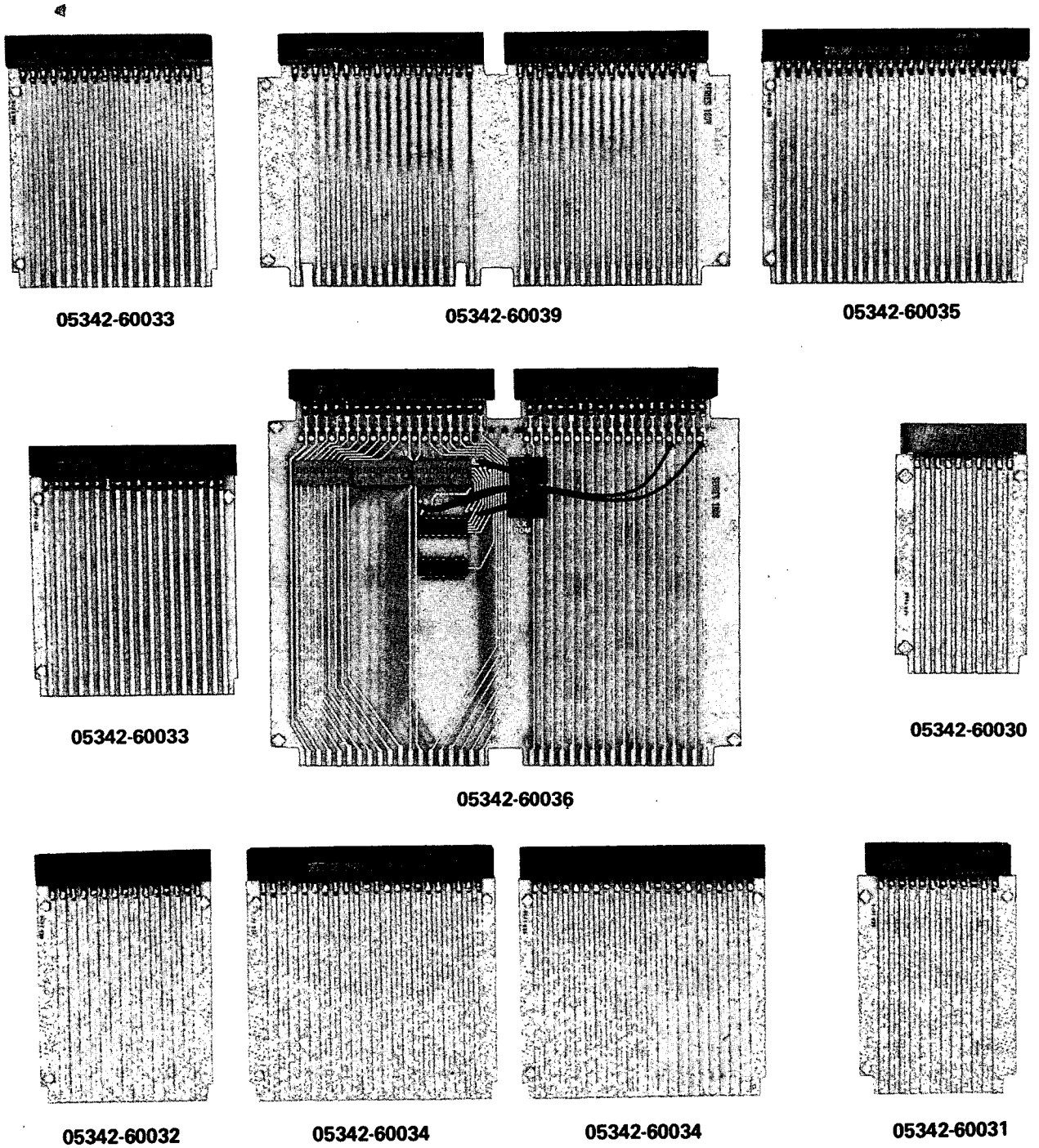

Figure 8-3. 10842A Service Accessory Kit

8-52. Using Extender Board 05342-60036

8-53. The following paragraphs describe the general operation of the extender board (05342-60036). Included is a description of the 3 DIP switches (S1, S2, and S3) the two toggle switches (S4 and S5) and test points R1, R2, and R3. *Figure 8-4* shows the signals present at R1, R2, and R3. *Figure 8-5* is the schematic diagram of the extender board.

8-54. The 05342-60036 extender board is used for troubleshooting the A14 Microprocessor Assembly in the 5342A. This extender board not only allows operation of A14 outside the instrument casting but it also permits:

a. Isolation of the 16-line address bus and the 8-line data bus from the rest of the instrument.

b. Generation of START/STOP signals for performing signature analysis on individual ROM's on A14.

c. Manual control of the microprocessor reset.

8-55. The S1 switch (leftmost switch) opens the data bus. With all switches up, the switches are in the closed position. The S2 and S3 switches open the 16 lines of the address bus.

8-56. Test points R1, R2, and R3 are used in taking signatures of the A14 ROM outputs as described in *Table 8-9*. U1 and U2 decode address lines to generate signals which bracket the addresses of each specific ROM. The signal at R1 is low only when ROM U1 is enabled. The signal at R2 is low only when ROM U4 is enabled. The signal at R3 is low only when ROM U7 is enabled.

8-57. If the A14 Microprocessor is put into free-run as described in *Table 8-9*, the signals shown in *Figure 8-4* should be observed at test points R1, R2, and R3 on the extender board.

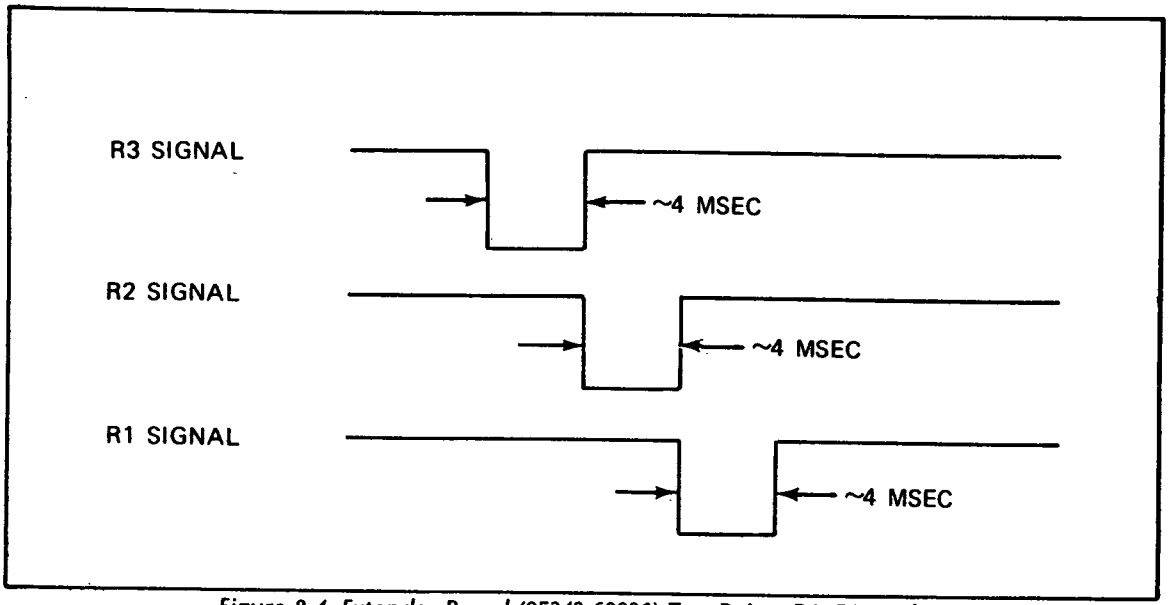

Figure 8-4. Extender Board (05342-60036) Test Points R1, R2, and R3

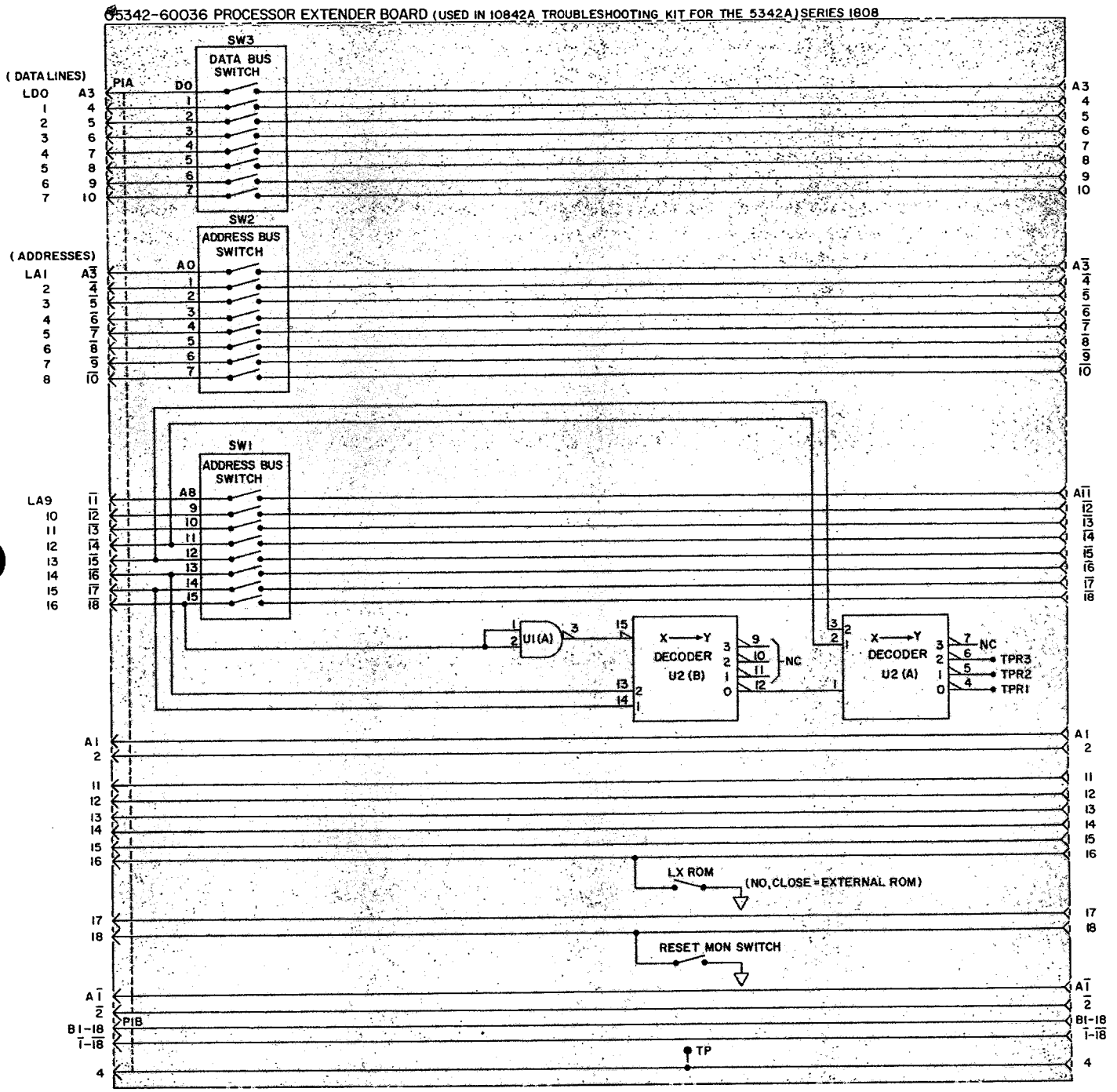

Figure 8-5. Extender Board (05342-60036) Schematic Diagram

8-58. LOGIC SYMBOLS

8-59. Logic symbols used in this manual conform to the American National Standard ANSI Y32.14-1973 (IEEE Std. 91-1973). This standard supersedes MIL-STD-806B. In the following paragraphs logic symbols are described. For further descriptions refer to HP Logic Symbology manual, part number 5951-6116.

8-60. Logic Concepts

8-61. The binary numbers 1 and Ø are used in pure logic where 1 represents true, yes, or active and Ø represents false, no, inactive. These terms should not be confused with the physical quantity (e.g., voltage) that may be used to implement the logic, nor should the term "active" be confused with a level that turns a device on or off. A truth table for a relationship in logic shows (implicitly or explicitly) all the combinations of true and false input conditions and the result (output). There are only two basic logic relationships, AND and OR. The following illustrations assume two inputs (A and B), but these can be generalized to apply to more than two inputs.

AND Y is true if and only if A is true and B is true (or more generally, if all inputs are true).
Y=1 if and only if A=1 **and** B=1
Y=A•B

OR Y is true if and only if A is true or B is true (or more generally, if one or more input(s) is (are) true).
Y=1 if and only if A=1 **or** B=1
Y=A+B

TRUTH TABLE

A	B	Y
1	1	1
1	0	0
0	1	0
0	0	0

EQUIVALENT SYMBOLS

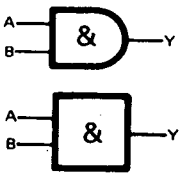

TRUTH TABLE

A	B	Y
1	1	1
1	0	1
0	1	1
0	0	0

EQUIVALENT SYMBOLS

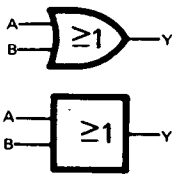

8-62. Negation

8-63. In logic symbology, the presence of the negation indication symbol o provides for the presentation of logic function inputs and outputs in terms *independent* of their physical values, the Ø-state of the input or output being the 1-state of the symbol referred to the symbol description.

EXAMPLE 1

TRUTH TABLE

A	B	Z
1	1	0
1	0	1
0	1	1
0	0	1

EXAMPLE 2

TRUTH TABLE

A	B	Z
1	1	0
1	0	1
0	1	1
0	0	1

EXAMPLE 3

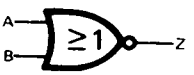

TRUTH TABLE

A	B	Z
1	1	0
1	0	0
0	1	0
0	0	1

EXAMPLE 4

TRUTH TABLE

A	B	Z
1	1	0
1	0	0
0	1	0
0	0	1

EXAMPLE 1 says that Z is *not* true if A is true *and* B is true or that Z is true if A *and* B are *not* both true. $\overline{Z}=AB$ or $Z=\overline{AB}$. This is frequently referred to as NAND (for NOT AND).

EXAMPLE 2 says that Z is true if A is *not* true *or* if B is *not* true. $Z=\overline{A}+\overline{B}$. Note that this truth table is identical to that of Example 1. The logic equation is merely a DeMorgan's transformation of the equations in Example 1. The symbols are equivalent.

EXAMPLE 3 $\overline{Z}=A+B$ or $Z=\overline{A+B}$ and,

EXAMPLE 4 $Z=\overline{A \cdot B}$, also share common truth table and are equivalent transformations of each other. The NOT OR form (Example 3) is frequently referred to as NOR.

NOTE

In this manual the logic negation symbol is NOT used.

8-64. Logic Implementation and Polarity Indication

8-65. Devices that can perform the basic logic functions, AND and OR, are called gates. Any device that can perform one of these functions can also be used to perform the other if the relationship of the input and output voltage levels to the logic variables 1 and Ø is redefined suitably.

8-66. In describing the operation of electronic logic devices, the symbol H is used to represent a "high level", which is a voltage within the more-positive (less-negative) of the two ranges of voltages used to represent the binary variables. L is used to represent a "low level", which is a voltage within the less-positive (more-negative) range.

8-67. A function table for a device shows (implicitly or explicitly) all the combinations of input conditions and the resulting output conditions.

8-68. In graphic symbols, inputs or outputs that are active when at the high level are shown without polarity indication. The polarity indicator symbol ◺ denotes that the active (one) state of an input or output *with respect to the symbol to which it is attached* is the low level.

NOTE

The polarity indicator symbol " ◺ " is used in this manual.

EXAMPLE 5 assume two devices having the following function tables.

DEVICE #1
FUNCTION TABLE

A	B	Y
H	H	H
H	L	L
L	H	L
L	L	L

DEVICE #2
FUNCTION TABLE

A	B	Y
H	H	H
H	L	H
L	H	H
L	L	L

POSITIVE LOGIC by assigning the relationship H=1, L=Ø at both input and output, Device #1 can perform the AND function and Device #2 can perform the OR function. Such a consistent assignment is referred to as positive logic. The corresponding logic symbols would be:

DEVICE #1

DEVICE #2

NEGATIVE LOGIC

alternatively, by assigning the relationship H=Ø, L=1 at both input and output, Device #1 can perform the OR function and Device #2 can perform the AND function. Such a consistent assignment is referred to as negative logic. The corresponding logic symbols would be:

DEVICE #1

DEVICE #2

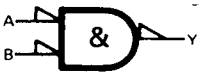

8-69. MIXED LOGIC. The use of the polarity indicator symbol (◺) automatically invokes a mixed-logic convention. That is, positive logic is used at the inputs and outputs that do not have polarity indicators, negative logic is used at the inputs and outputs that have polarity indicators.

EXAMPLE 6
FUNCTION TABLE

A	B	Z
H	H	L
H	L	H
L	H	H
L	L	H

This may be shown either of two ways:

Note the equivalence of these symbols to examples 1 and 2 and the fact that the function table is a positive-logic translation (H=1, L=Ø) of the NAND truth table, and also note that the function table is the negative-logic translation (H=Ø, L=1) of the NOR truth table, given in Example 3.

EXAMPLE 7
FUNCTION TABLE

A	B	Z
H	H	L
H	L	L
L	H	L
L	L	H

This may be shown either of two ways:

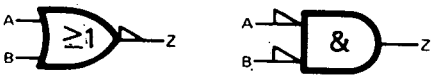

Note the equivalence of these symbols to examples 3 and 4 and the fact that the function table is a positive-logic translation (H=1, L=Ø) of the NOR truth table, and also note that the function table is the negative-logic translation (H=Ø, L=1) of the the NAND truth table, given in Example 1.

8-70. It should be noted that one can easily convert from the symbology of positive-logic merely by substituting a polarity indicator (◺) for each negative indicator (o) while leaving the distinctive shape alone. To convert from the symbology of negative-logic, a polarity indication (◺) is substituted for each negation indicator (o) and the OR shape is substituted for the AND shape or vice versa.

8-71. It was shown that any device that can perform OR logic can also perform AND logic and vice versa. DeMorgan's transformation is illustrated in Example 1 through 7. The rules of the transformation are:

1. At each input or output having a negation (o) or polarity (◺) indicator, delete the indicator.
2. At each input or output not having an indicator, add a negation (o) or polarity (◺) indicator.
3. Substitute the AND symbol ⊐ for the OR symbol ⊃ or vice versa.

These steps do not alter the assumed convention; positive-logic stays positive, negative-logic stays negative, and mixed-logic stays mixed.

8-72. The choice of symbol may be influenced by these considerations: (1) The operation being performed may best be understood as AND or OR. (2) In a function more complex than a basic gate, the inputs will usually be considered as inherently active high or active low (e.g., the J and K inputs of a J-K flip-flop are active high and active low, respectively). (3) In a chain of logic, understanding and the writing of logic equations are often facilitated if active low or negated outputs feed into active low or negated inputs.

8-73. Other Symbols

8-74. Additional symbols are required to depict complex logic diagrams, as follows:

Dynamic input activated by transition from a low level to a high level. The opposite transition has no effect at the output.

Dynamic input activated by transition from a high level to a low level. The opposite transition has no effect at the output.

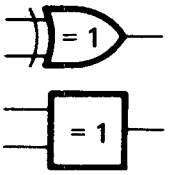

Exclusive OR function. The output will assume its indicated active level if and only if one and only one of the two inputs assumes its indicated active level.

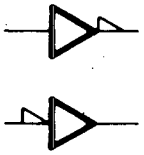

Inverting function. The output is low if the input is high and it is high if the input is low. The two symbols shown are equivalent.

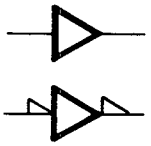

Noninverting function. The output is high if the input is high and it is low if the input is low. The two symbols shown are equivalent.

OUTPUT DELAY. The output signal is effective when the input signal returns to its opposite state.

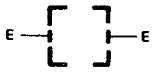

EXTENDER. Indicates when a logic function increases (extends) the number of inputs to another logic function.

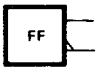

FLIP-FLOP. A binary sequential element with two stable states: a set (1) state and a reset (0) state. Outputs are shown in the 1 state when the flip-flop is set. In the reset state the outputs will be opposite to the set state.

RESET. A 1 input will reset the flip-flop. A return to 0 will cause no further effect.

SET. A 1 input will set the flip-flop. A return to 0 will cause no further action.

TOGGLE. A 1 input will cause the flip-flop to change state. A return to 0 will cause no further action.

J INPUT. Similar to the S input except if both J and K (see below) are at 1, the flip-flop changes state.

K INPUT. Similar to the R input (see above).

D INPUT (Data). Always dependent on another input (usually C). When the C and D inputs are at 1, the flip-flop will be set. When the C is 1 and the D is 0, the flip-flop will reset.

Address symbol has multiplexing relationship at inputs and demultiplexing relationship at outputs.

8-75. Dependency Notation "C" "G" "V" "F"

8-76. Dependency notation is a way to simplify symbols for complex IC elements by defining the existence of an AND relationship between inputs, or by the AND conditioning of an output by an input without actually showing all the elements and interconnections involved. The following examples use the letter "C" for control and "G" for gate. The dependent input is labeled with a number that is either prefixed (e.g., 1X) or subscripted (e.g., X_1). They both mean the same thing. The letter "V" is used to indicate an OR relationship between inputs or between inputs and outputs with this letter (V). The letter "F" indicates a connect-disconnect relationship. If the "F" (free dependency) inputs or outputs are active (1) the other usual normal conditions apply. If one or more of the "F" inputs are inactive (Ø), the related "F" output is disconnected from its normal output condition (it floats).

The input that controls or gates other inputs is labeled with a "C" or a "G", followed by an identifying number. The controlled or gated input or output is labeled with the same number. In this example, "1" is controlled by "G1."

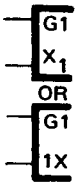

When the controlled or gated input or output already has a functional lable (X is used here), that label will be prefixed or subscripted by the identifying number.

If a particular device has only one gating or control input then the identifying number may be eliminated and the relationship shown with a subscript.

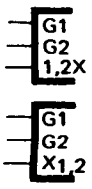

If the input or output is affected by more than one gate or control input, then the identifying numbers of each gate or control input will appear in the prefix or subscript, separated by commas. In this example "X" is controlled by "G1" and "G2."

8-77. Control Blocks

8-78. A class of symbols for complex logic are called control blocks. Control blocks are used to show where common control signals are applied to a group of functionally separate units. Examples of types of control blocks follow.

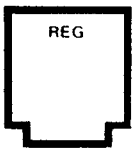

Register control block. This symbol is used with an associated array of flip-flop symbols to provide a point of placement for common function lines, such as a common clear.

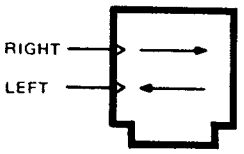

Shift register control block. These symbols are used with any array of flip-flop symbols to form a shift register. An active transition at the inputs causes left or right shifting as indicated.

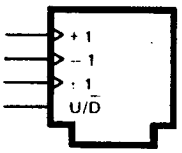

Counter control block. The symbol is used with an array of flip-flops or other circuits serving as a binary or decade counter. An active transition at the +1 or −1 input causes the counter to increment one count upward or downward, respectively. An active transition at the ±1 input causes the counter to increment one count upward or downward depending on the input at an up/down control.

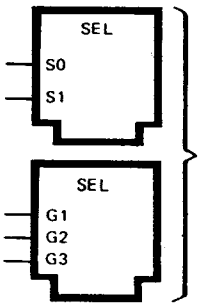

Selector control block. These symbols are used with an array of OR symbols to provide a point of placement for selection (S) or gating (G) lines. The selection lines enable the input designated 0, 1, ...n of each OR function by means of a binary code where S0 is the least-significant digit. If the 1 level of these lines is low, polarity indicators (▷) will be used. The gating lines have an AND relation with the respective input of each OR function: G1 with the inputs numbered 1, G2 with the input numbered 2, and so forth. If the enabling levels of these lines is low, polarity indicators (▷) will be used.

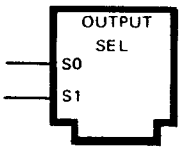

Output selector control block. This symbol is used with a block symbol having multiple outputs to form a decoder. The selection lines enable the output designated 0, 1, ...n of each block by means of a binary code where S0 is the least-significant digit. If the 1 level of these lines is low, polarity indicators (▷) will be used.

8-79. Complex Logic Devices

8-80. Logic elements can be combined to produce very complex devices that can perform more difficult functions. A control block symbol can be used to simplify understanding of many complex devices. Several examples of complex devices are given here. These examples are typical of the symbols used in schematic diagrams in this manual.

Reference Designation
A2U2, A2U7
Part Number
1820-0468
SN7445N

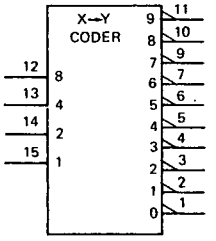

Description
BCD TO DECIMAL DECODER/DRIVER

The output which is low will correspond to the binary weighted input. The minus signs at the output indicate that the element is capable of supplying LOW's only.

Reference Designation
A2U3
Part Number
1820-1443
SN74LS293N

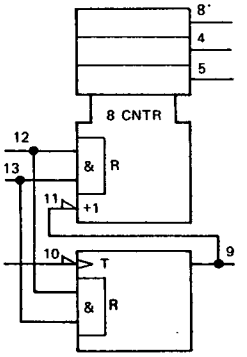

Description
4-BIT BINARY COUNTER

This binary counter has four master-slave flip-flops and gating for which the count cycle length is divide-by-eight. The counter has a gated zero reset. To use the maximum count length, the pin 11 input is connected to the pin 9 output. The input count pulses are applied to the pin 10 input.

Reference Designation
A2U8, A2U11
Part Number
1820-0428
SN7489

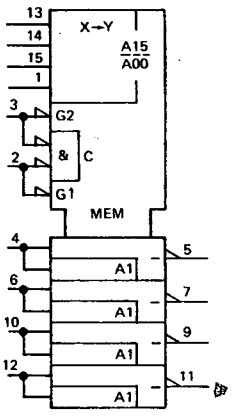

Description
64-BIT READ/WRITE MEMORY

This memory has an array of 64 flip-flop memory cells in a matrix to provide 16 words of 4 bits each. Information present at the data input (pins 4, 6, 10, 12) is written into memory by holding both the memory enable (pin 2) and write enable (pin 3) LOW while addressing the desired word at the BCD weighted inputs (pins 1, 13, 14, 15). The complement of the information written into memory is read out at the four outputs by holding memory enable (pin 2) LOW, write enable (pin 3) HIGH and selecting the desired address.

Reference Designation
A2U12, A2U16
Part Number
1820-1254
DM8095N

Reference Designation
A14U16, A14U18
Part Number
1820-1368
DM8096N

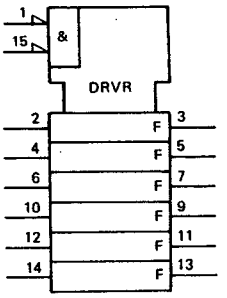

A2U12, A2U16

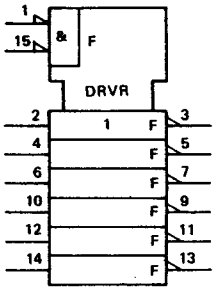

A14U16, A14U18

Reference Designation
A2U6
1820-1049
DM8097N

Reference Designation
A14U8
Part Number
1820-1255
DM8098N

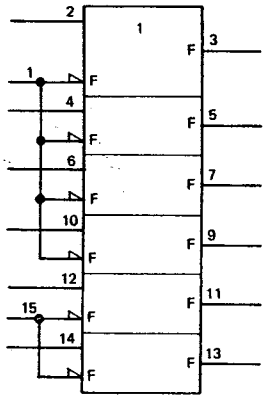

A2U6

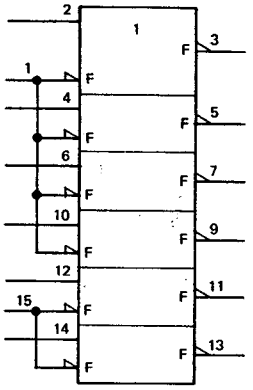

A14U8

Description
HEX BUFFERS - HEX INVERTERS

The buffers (8095-8097) and inverters (8096-8098) convert standard TTL or DTL outputs to THREE-STATE outputs. The 8095 and 8096 control all six devices from common inputs (pins 1 and 15 LOW). The 8097 and 8098 control four devices from one input (pin 1 LOW) and two devices from another input (pin 15 LOW).

Reference Designation
A2U17
Part Number
1820-1428
74LS158

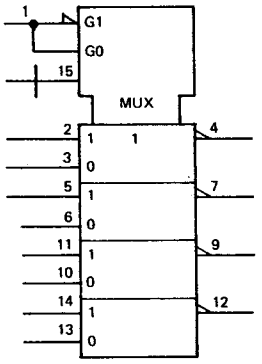

Description
2-LINE TO 1-LINE DATA SELECTOR/MULTIPLEXER

This quad two input multiplexer selects one of two word inputs and outputs the data the data when enabled. The level at pin 1 selects the input word. The outputs are LOW when pin 15 is LOW.

Reference Designation
A2U18,A2U18, A9U1,
A10U4, A12U13, A13U4,
A14U9 A15U3, A15U4,
A15U9, A15U10, A15U14,
A15U19, A15U34, A15U34,
A17U9, A17U15
Part Number
1820-1112
SN74LS74N

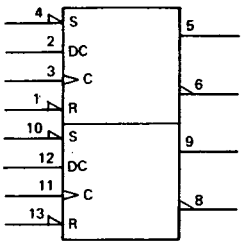

Description
DUAL D-TYPE FLIP-FLOP

The dual D-type flip-flop consists of two indepentent D-type flip-flops. The information present at the data (D_C) input is transferred to the active-high and active-low outputs on a low-to-high transition of the clock (C) input. The data input is then locked out and the outputs do not change again until the next low-to-high transition of the clock input. The set (S) and reset (R) inputs override all other input conditions: when (S) is low, the active-high output is forced high; when reset (R) is low, the active-high output is forced low. Although normally the active-low output is the complement of the active-high output, simultaneous low inputs at the set and reset will force both the active-low and active-high outputs to go high at the same time on some D-type flip-flops. This condition will exist only for the length of time that both set and reset inputs are held low. The flip-flop will return to some indeterminate state when both the set and reset inputs are returned to the high state.

Reference Designation
A1U22
Part Number
1820-0574
DM8551N

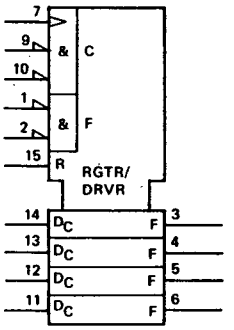

Description
4-BIT D-TYPE REGISTERS

When both data-enable inputs (9 and 10) are LOW, data at the D_C inputs is loaded into the flip-flops on the next positive transition of the clock (pin 7). When both outputs control inputs (pins 1 and 2) are LOW, data is available at the outputs. The outputs are disabled by a HIGH at either output control input. The outputs then represent a high impedance.

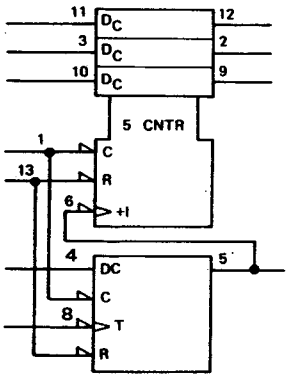

Reference Designation
A10U1, A13U13, A13U14
A13U17, A13U18
Part Number
1820-1251
SN74LS196N

Description
50/30 MHz PRESETTABLE DECADE COUNTER/LATCH

The Decade Counter consists of a divide-by-two and a divide-by-five counter formed by connecting pin 5 to pin 6 and taking the output from pin 12.

The outputs may be preset to any state by making "C" active low and entering the desired data at the "D_C" inputs. The outputs at pins 5, 9, 2, and 12 will then correspond to the data inputs independent of the state of the count-up clocks at pins 6 and 8. An active high signal at pin 1 then enables the counter by latching the parallel data into the counter. The count-up clock at pin 8 clocks the ÷2 counter and pin 6 clocks the ÷5 counter. When the counter is clocked at pins 8 or 6, the outputs will change on the negative-going edge of the signal. An active low at the "R" (reset) input (pin 13) causes all the outputs to go low independent of the counting state.

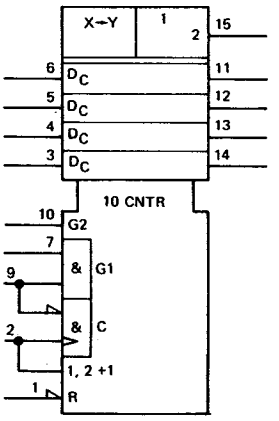

Reference Designation
A10U8, A10U9,
A10U13, A10U14
Part Number
1820-1429
74LS160

Description
SYNCHRONOUS DECADE COUNTER

This synchronous presettable decade counter has four master slave flip-flops that are triggered on the positive-going edge of the clock pulse (pin 2). A LOW at the load input (pin 9) disables the counter and causes the outputs to agree with the setup data after the next clock pulse regardless of the levels at the enable inputs (pins 7 and 10). The clear function (pin 1) is asynhronous and a low level clear input sets all outputs low regardless of the levels of the clock, load or enable inputs. Both count enable inputs (pins 7 and 10) must be HIGH to count and the pin 10 input is fed forward to neable the carry output (pin 15).

Reference Designation
A10U10, A10U15, A10U17
Part Number
1820-1196
SN74LS174N

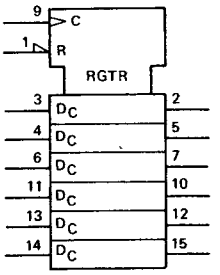

Reference Designation
A10U11, A10U16
Part Number
1820-1195
SN74LS175N

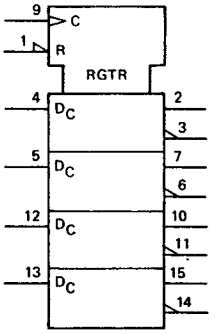

Description
HEX/QUAD D-TYPE FLIP-FLOPS

Information at the D inputs is transferred to the outputs on the positive-edge of the clock pulse (pin 9). Clock triggering occurs at a particular voltage level. The hex FFs have single outputs, the quad FFs have complementary outputs.

Reference Designation
A12U10, A12U15
Part Number
1820-1193
SN74LS197N

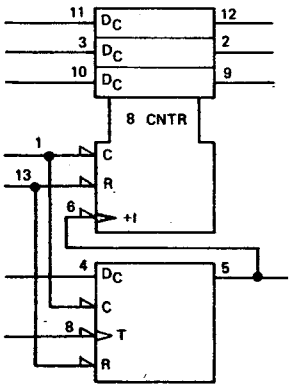

Description
30 MHz PRESETTABLE BINARY
COUNTERS/LATCHES

This counter consists of four master-slave flip-flops that form a divide-by-two and a divide-by-eight counter. The outputs may be preset to any state by placing a low on pin 1 and entering the desired data. The outputs will change to agree with the inputs regardless of the state of the clocks. When used as a high-speed 4-bit ripple-through counter, the output of pin 5 must be externaly connected to the clock 2 input (pin 6). The input count pulses are applied to the clock 1 input (pin 8). Simultaneous divisions by 2, 4, 8, and 16 are performed at output pins 12, 2, 9, and 5, respectively.

When used as a 3-bit ripple-through counter, the input count pulses are applied to the clock 2 input (pin 6). Simultaneous frequency divisions by 2, 4, and 8 are available at the Q_B. Q_C, and Q_D outputs. Independent use of flip-flop A is available if the load and clear functions coincide with those of the 3-bit ripple-through counter.

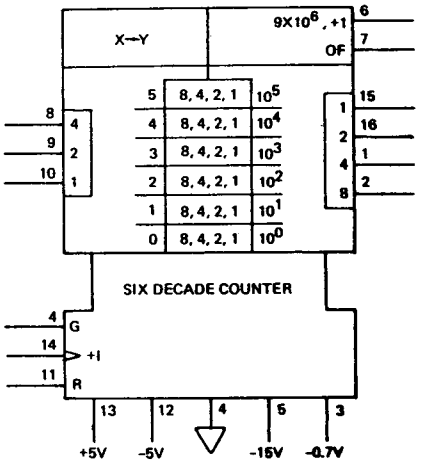

Reference Designation
A13U1, A13U2
Part Number
1820-0634

Description
SIX DECADE COUNTER

The six decade counter is an MOS, 6 digit, 10 MHz ripple-through counter with buffer storage for each of the 6 decades. The circuit has one set of BCD (positive logic (8421) outputs that may be switched from digit-to-digit by means of a 3-to-6 line decoder. An overflow output (pin 7) and a fifth decade carry output (pin 6) is also available. When the transfer input (pin 4) is held LOW, the decimal count of a selected decade can be transmitted through its own decade storage buffer to the BCD outputs by means of the 3-to-6 line decoder which is controlled by the BCD inputs.

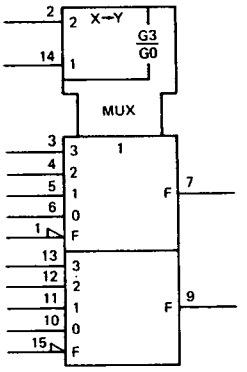

Reference Designation
A13U5, A13U6,
A13U9, A13U10
Part Number
1820-1238
SN74LS253N

Description
DUAL 4-INPUT MULTIPLEXER

Input states on pins 2 and 14 are decoded according to their weighting modifiers to form AND gates (G0 through G3) in the common control block. The data inputs have numeric modifiers to indicate the specific gate which must be active for that input to be selected. The output on pin 7 will be HIGH IFF the selected input is HIGH and the inhibit input on pin 1 is LOW. Similarly, the ouptut on pin 9 will be HIGH IFF the selected input is HIGH and the inhibit input on pin 15 is LOW. If an inhibit input (pin 1 or 15) is HIGH the corresponding output (pin 7 or 9) will be LOW regardless of the state of the selected input.

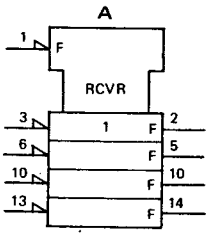

Reference Designation
A14U2, A14U3
Part Number
1820-1081
8T26

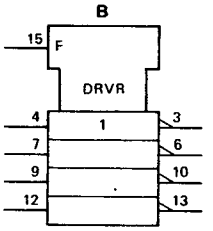

Description
QUAD BUS DRIVER/RECEIVER

The bus driver/receiver consists of four pairs of inverting logic gates and two buffered common enable inputs (pins 1 and 15). A LOW on the input enable (pin 1) enables the receiver gates. A HIGH on the bus enable (pin 15) input allows input data to be transferred to the output of the driver, and a LOW forces the output to a high impedance state.

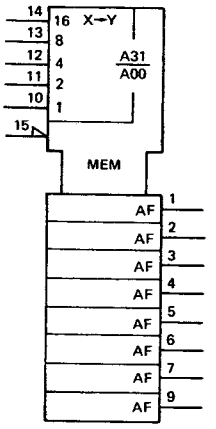

Reference Designation
A15U23
Part Number
1816-1154

Reference Designation
A15U26
Part Number
1816-1155

Description
READ ONLY MEMORY (ROM) WITH 32 ADDRESSES

Address selection is determined by the five upper inputs which are decoded into 32 possible addresses (A00 through A31) corresponding to the weighing modifiers at the inputs. Input modifier F (pin 15) gates the outputs. Stored data will be read from the selected memory address if F is active (LOW). The output data (pins 1-7 and 9) are active HIGH.

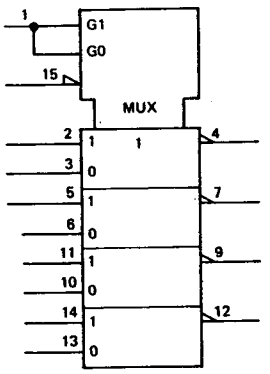

Reference Designation
A16U6, A16U7
Part Number
1820-1439
SN74LS258N

Description
2-LINE TO 1-LINE DATA
SELECTOR/MULTIPLEXER (3-STATE)

This quad two input multiplexer selects one of two word inputs and outputs the data when enabled. When pin 15 is LOW, the level at pin 1 selects the input word. The outputs are LOW. When pin 15 is HIGH, the outputs are off (high impedance).

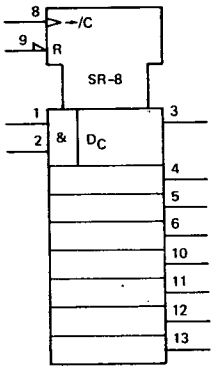

Reference Designation
A17U4, A17U5, A17U7
Part Number
1820-1433
SN74LS164N

Description
8-BIT PARALLEL OUT SERIAL SHIFT REGISTER

This 8-bit shift register has gated serial inputs and an asynchronous clear. A LOW at one or both gated serial inputs (pins 1, 2) inhibits entry of data and resets the first FF to the low level at the next clock pulse (pin 8). A high-level input (pin 1 or 2) enables the other input which will then determine the state of the first FF. Data is serially shifted in and out of the 8-bit register during the positive-going transition of the clock pulse. Clear is independent of the clock and occurs when pin 9 is LOW.

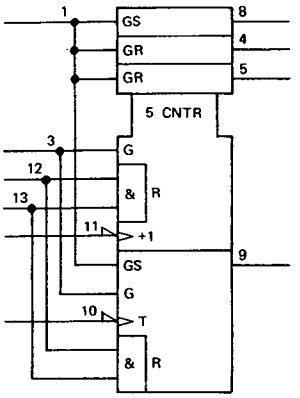

Reference Designation
A17U11
Part Number
1820-1442
SN74LS290N

Description
DECADE COUNTER

The decade counter has four master-slave flip-flops and gating for which the count cycle length is divided by five. This counter has a gated zero reset and a gated set-to-nine input. To use the maximum count length, the pin 11 input is connected to the pin 9 output. The input count pulses are applied to the T input at pin 10. A symmetrical divide-by-ten count can be obtained by connecting the pin 8 ouptut to the pin 10 input and applying the input count to the pin 11 input to obtain a divide-by-ten square wave at the pin 9 output.

8-81. THEORY OF OPERATION

8-82. The following theory of operation is introduced with a description of the unique harmonic heterodyne technique used in the 5342A. Then the overall operation is described with a simplified block diagram, followed by discussions of FM tolerance, automatic amplitude discrimination, and sensitivity. The function and relationships of the major assemblies are described next (to a complete block diagram), followed by a detailed description of the circuits on each assembly with reference to the schematic diagrams.

8-83. HARMONIC HETERODYNE TECHNIQUE

8-84. The HP 5342A Frequency Counter uses a harmonic heterodyne down-conversion technique to down convert the microwave input frequency into the range of its internal, low-frequency counter. This technique combines the best performance characteristics of heterodyne converters and transfer oscillators to achieve high sensitivity, high FM tolerance, and automatic amplitude discrimination.

8-85. All microwave counters must down convert the unknown microwave frequency to a low frequency signal which is within the counting range of an internal low frequency counter (typically 200 to 500 MHz). Heterodyne converters down convert the unknown signal, f_X, by mixing it with an accurately known local oscillator frequency, f_{LO}, such that the difference frequency, f_{IF} ($= f_X - f_{LO}$ if $f_X > f_{LO}$ and $= f_{LO} - f_X$ if $f_X < f_{LO}$) is within the counting range of the low frequency counter. The counted frequency, f_{IF}, is then added (or subtracted if $f_X < f_{LO}$) to/from the local oscillator frequency to determine the unknown frequency.

8-86. Like heterodyne converters, transfer oscillators also mix the unknown signal with harmonics of an internally generated signal, f_{VCO}. When one of the harmonics of the VCO signal, $N \cdot f_{VCO}$, mixes with the unknown to produce zero beat, then the VCO frequency is measured by the low frequency counter. After determining which harmonic produced zero beat, the measured VCO frequency is multiplied by N ($f_X = N \cdot f_{VCO}$). One of the major differences between the heterodyne technique and the transfer oscillator technique is the fact that the heterodyne

converter employs a filter to select only one harmonic of the internal oscillator to mix with the unknown whereas the transfer oscillator mixes the unknown simultaneously with all harmonics of the internal frequency.

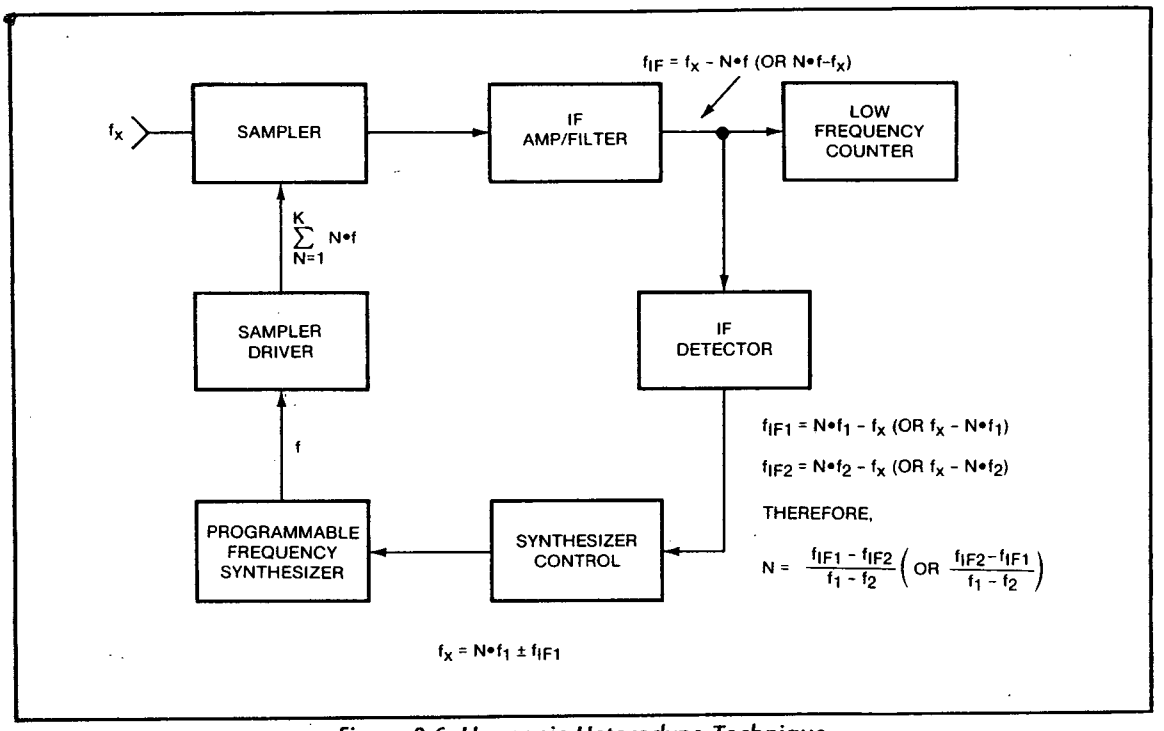

Figure 8-6. Harmonic Heterodyne Technique

8-87. *Figure 8-6* is a simplified block diagram of the harmonic heterodyne technique. In this technique, all of the harmonics of an internal oscillator (a programmable frequency synthesizer locked to the counter's time base) are simultaneously mixed with the unknown signal by the sampler and sampler driver (samplers are like harmonic mixers except that the conduction angle is much narrower — the sampling diodes in the HP 5342A sampler, for example, conduct for only a few picoseconds during each period of the sampling signal). The output of the sampler consists of sum and difference frequencies produced by each harmonic of the internal oscillator mixing with the unknown. The programmable frequency synthesizer is incremented in frequency until one of the outputs of the sampler is in the counting range of the low frequency counter. The IF detector detects when the IF is in the range of the low frequency counter and sends a signal which causes the synthesizer control to stop incrementing the frequency of the frequency synthesizer. The IF is then counted by the low frequency counter. The unknown frequency can be determined from the relation: $f_x = N \cdot f_1 \pm f_{IF1}$

where f_x = unknown frequency

N = harmonic of frequency synthesizer which mixed with unknown to produce countable IF

f_1 = programmed frequency of synthesizer

f_{IF1} = IF produced by $N \cdot f_1$ mixing with f_x

8-88. The frequency, f_1, of the programmable synthesizer is known since it is known where indexing of the synthesizer was stopped. The IF, f_{IF1}, is known since it is counted by the low frequency counter. Still to be determined are the N number and the sign (±) of the IF (the sign of f_{IF1} will be (+) if $N \cdot f_1$ is *less* than f_x; the sign of f_{IF1} is (—) if $N \cdot f_x$ is *greater* than f_x).

8-89. To determine N and the sign of f_{IF1}, one more measurement must be taken with the synthesizer offset from its previous value by a known frequency, $f_2 = f_1 - \Delta f$. This produces an IF, f_{IF2}, which is counted by the low frequency counter. N is determined by the following:

$$f_{IF1} = N \cdot f_1 - f_x \text{ (if } Nf_1 > f_x)$$

$$f_{IF2} = N \cdot f_2 - f_x \text{ (if } Nf_2 > f_x)$$

$$\text{therefore } N = \frac{f_{IF1} - f_{IF2}}{f_1 - f_2}$$

or, if f_x is greater than Nf_1:

$$f_{IF1} = f_x - N \cdot f_1 \text{ (if } Nf_1 < f_x)$$

$$f_{IF2} = f_x - N \cdot f_2 \text{ (if } Nf_2 < f_x)$$

$$\text{therefore } N = \frac{f_{IF2} - f_{IF1}}{f_1 - f_2}$$

8-90. Referring to *Figure 8-7*, it is seen that if f_x is *greater* than $N \cdot f_1$, then f_{IF1}, produced by mixing $N \cdot f_1$ with f_x, will be *less* than f_{IF2}, produced by mixing $N \cdot f_2$ with f_x, since f_2 is *less* than f_1, by Δf. However, if f_x is *less* than $N \cdot f_1$, then f_{IF1} will be *greater* than f_{IF2}.

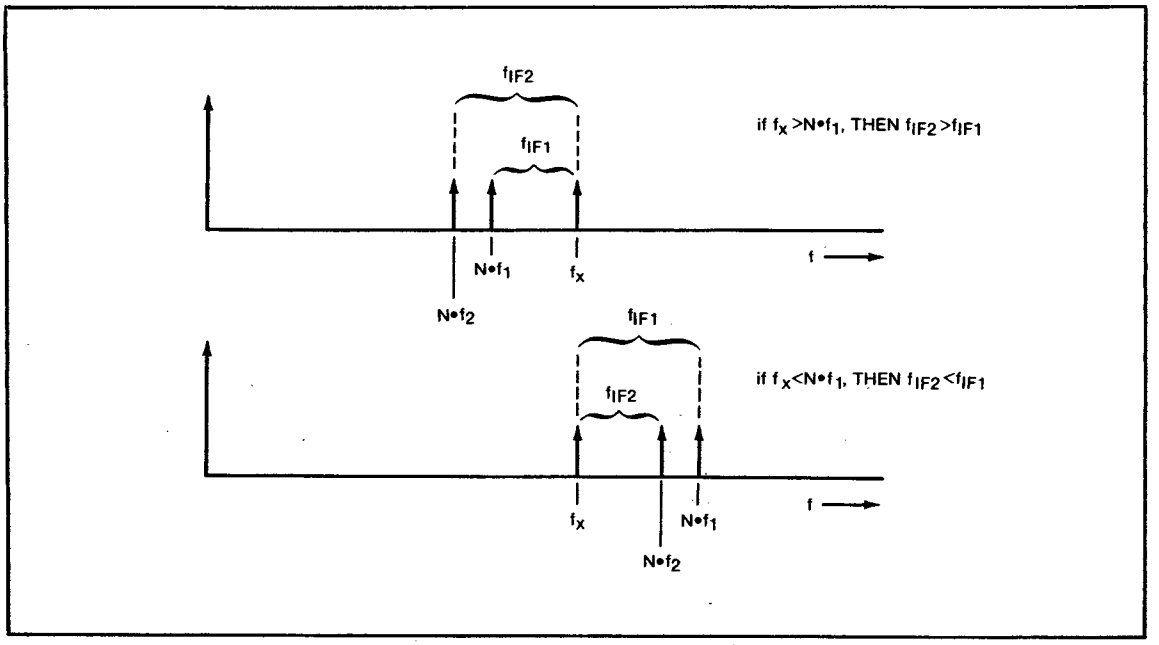

Figure 8-7. Frequency Relationships

8-91. If f_{IF2} is *less* than f_{IF2}, then N is computed from

$$N = \frac{f_{IF1} - f_{IF2}}{f_1 - f_2}$$

If f_{IF2} is *greater* than f_{IF1}, then N is computed from

$$N = \frac{f_{IF2} - f_{IF1}}{f_1 - f_2}$$

8-92. The unknown frequency is then computed from the following:

$$f_x = N \cdot f_1 - f_{IF1} \text{ } (f_{IF2} < f_{IF1})$$

$$f_x = N \cdot f_1 + f_{IF1} \text{ } (f_{IF1} < f_{IF2})$$

8-93. Since the frequency of the synthesizer is known to the accuracy of the counter's time base and the IF is measured to the accuracy of the counter's time base, the accuracy of the microwave measurement is limited only by the time base error and ±1 count error.

8-94. HP 5342A OVERALL OPERATION

8-95. If all signals into the counter could be guaranteed to have little or no FM, then the counter could operate quite simply as described previously. However, many signals in the microwave region, such as those originating from microwave radios, have significant amounts of frequency modulation. To prevent FM on the signal from causing an incorrect computation of N, the harmonic heterodyne technique is implemented as shown in *Figure 8-8* which is a simplified block diagram of the HP 5342A. The differences between *Figure 8-8* and the block diagram of *Figure 8-6* are:

a. Two synthesizers which are offset by precisely 500 kHz.

b. Two counters.

c. A multiplexer which multiplexes between the two synthesizer frequencies — when f_1 is driving the sampler driver, the IF_1 produced is measured by counter A and when f_1 drives the sampler driver, the IF_2 produced is measured by counter B.

d. A pseudorandom sequence generator which controls the multiplexer during N determination.

8-96. The overall operating algorithm for the block diagram of *Figure 8-8* is as follows: With the multiplexer having selected the main oscillator output, the main oscillator frequency, f_1, is swept from 350 MHz to 300 MHz in 100 kHz steps (the offset oscillator frequency, f_2, is maintained at f_1 - 500 kHz by a phase-locked loop) until the IF detector indicates the presence of an IF signal in the range of 50 MHz to 100 MHz. At this point, the synthesizer stops its sweep and the counter starts the harmonic number (N) determination. A pseudorandom sequence (prs) output by the prs

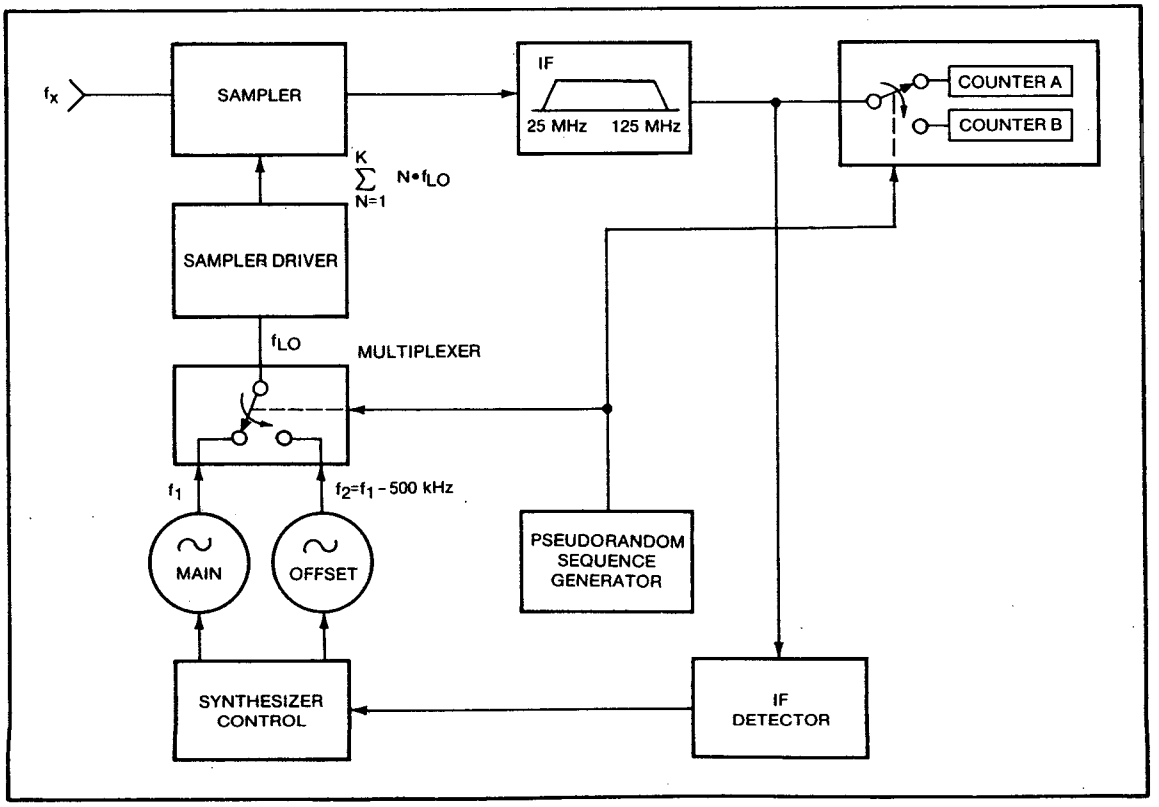

Figure 8-8. HP 5342A Simplified Block Diagram

generator switches between the main oscillator and offset oscillator as well as counter A and B so that counter A accumulates f_{IF1} (produced by $N \cdot f_1$ mixing with f_X) and counter B accumulates f_{IF2} (produced by $N \cdot f_2$ mixing with f_X). The pseudorandom switching prevents coherence between the switching rate of the multiplexer and the modulation rate of the FM from producing an incorrect computation of N. Of course, during the sequence, each counter is enabled for exactly the same total amount of time. The N number and sign of the IF are computed as previously described since counter A accumulates f_{IF1}, and counter B accumulates f_{IF2}. The prs (pseudo-random sequence) is then disabled, the main oscillator is selected, and the frequency of f_{IF1} is measured in counter A to the selected resolution.

8-97. The total measurement time, then, consists of these three components: sweep time, N determination time, and gate time. The period of the sweep is 150 ms which is the worst case time to detect a countable IF. The normal prs for N determination lasts for 360.4 ms (a rear panel switch selects a longer prs for higher FM tolerance). The gate time required depends on the resolution. For 1 Hz resolution, the gate is 1 second. For gate times from 10 Hz to 100 kHz, the gate time is 4 s/Hz so that 1 kHz resolution is achieved in 4 ms. 1 MHz resolution takes a 10-microsecond gate time.

8-99. FM TOLERANCE

8-99. The worst case normal mode FM tolerance is 20 MHz p-p and occurs when the period of the modulation is near the period of the pseudorandom sequence which is 360.4 milliseconds. When the FM exceeds 20 MHz p-p, the computation of N may be in error by ±1 (round off error). For FM is excess of 20 MHz p-p, a wide range FM mode with a long prs is selectable (via a rear panel switch) which provides a worst case FM tolerance of 50 MHz p-p. In this case, however, the limiting factor is not round off in the computation of N but the allowable range of frequencies in the IF.

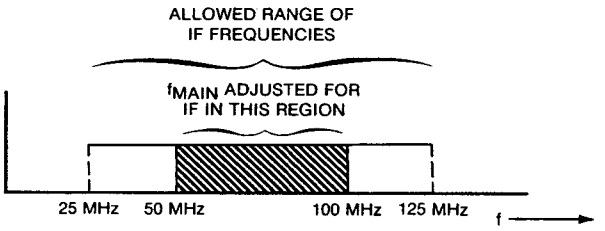

8-100. During the sweep, the frequency of the main oscillator is adjusted until f_{IF1} and f_{IF2} both fall within the range of 50 MHz to 100 MHz. In the worst case, when the IF occurs at 100 MHz or 50 MHz, the signal may deviate by a maximum of 25 MHz before crossing the band-edge of allowable IF frequencies. This gives a worst case FM tolerance of 50 MHz peak-to-peak. For the wide range FM, the period of the long pseudorandom sequence is 2.096 seconds which means that acquisition time is significantly longer for the wide range FM mode.

8-101. AUTOMATIC AMPLITUDE DISCRIMINATION

8-102. The HP 5342A has the ability to automatically discriminate against lower amplitude signals in its range of 0.5—18 GHz in favor of the highest amplitude signal in the range. Thus, if there is 20 dB separation (typically better than 10 dB) between the highest amplitude signal and any other signal in the 0.5—18 GHz range, the counter automatically measures the highest amplitude signal.

8-103. Amplitude discrimination is a feature of the HP 5342A because of two design features: the bandwidth of the preamplifier, which is 175 MHz, means that there are no gaps between the power spectrums produced by mixing harmonics of the oscillator with the input; and limiting of

all IF signals produced by inputs greater than the counter's sensitivity means that the IF is at the frequency of the largest amplitude signal in the input spectrum and is frequency modulated by the lower amplitude signals. (This is the well known AM to PM conversion characteristic of limiters. The bandwidth and roll off of the preamp are chosen so that the PM does not introduce errors into the count.)

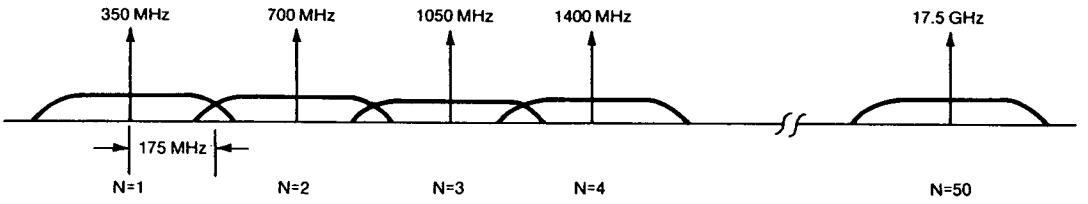

8-104. If there were gaps, then there could be a signal in the 0.5—18 GHz range which would not appear in the down converted IF. Thus, this signal, even if it were the largest, could not be measured.

8-105. SENSITIVITY

8-106. The limiting factor in determining the sensitivity of the HP 5342A is the effective noise bandwidth of the IF. Since the IF signal to noise ratio must be kept at a value which insures that there are no noise induced errors in counting the IF signal, the noise bandwidth of the IF determines the noise power; and, therefore, sets the minimum input signal level.

8-107. The IF Detector detects two parameters: one output is true if the IF signal is in the range of 50 MHz to 100 MHz and the input power level is greater than approximately -30 dBm; the other output is true if the IF signal is in the range of 25 MHz to 125 MHz and the input power level is greater than approximately -30 dBm. The detector thus insures that the input signal is sufficiently large to produce an IF with an acceptable signal to noise ratio. The 50 to 100 MHz IF output is used when sweeping since, to achieve the specified FM tolerance, the counter must center the IF somewhere in the range of 50 to 100 MHz. The 25 to 125 MHz output is used to ensure that the IF signal does not exceed those limits and that the input does not drop below -30 dBm. Either of these events occurring could cause a wrong computation for N.

8-108. The reason the IF is restricted to a 25 to 125 MHz bandwidth is examined in the following: the actual bandwidth of the IF is 175 MHz (set by the A25 Preamplifier) which is required for automatic amplitude discrimination. However, the counter restricts the countable IF to frequencies less than 125 MHz so as to prevent generating two IF signals — one generated by "N" times the main oscillator frequency and the other generated by "N±1" times the main oscillator frequency. If two IF signals are generated, then incorrect counting may result. By restricting the IF signal to be less than 125 MHz, the upper tone is of a high enough frequency as to be sufficiently attenuated by the 175 MHz bandwidth of the preamplifier so that no errors are introduced. Consider what would happen if IF frequencies to 175 MHz were allowed. Take the example of a 760 MHz input signal. By mixing with the second harmonic of 300 MHz, an IF of 160 MHz is produced. The input also mixes with the third harmonic of 300 MHz to produce another IF signal at 140 MHz. Neither signal is greatly attenuated by the 175 MHz bandwidth of the preamp as shown below and miscounting results because of interference between the two tones.

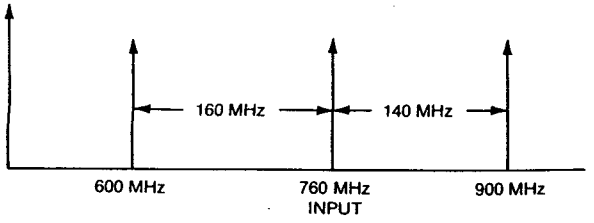

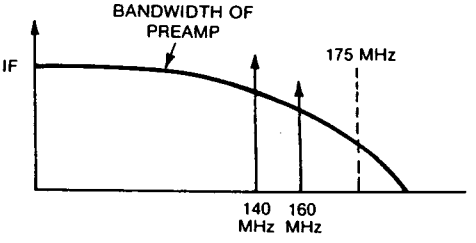

8-109. By limiting the IF to frequencies less than 125 MHz, the problem described in paragraph 8-108 does not occur. For the case of a 725 MHz input, the second harmonic of 300 MHz produces an IF of 125 MHz (the maximum allowable IF) and the third harmonic produces an IF of 175 MHz. But the IF signal at 175 MHz is attenuated by the 175 MHz bandwidth of the preamplifier as shown below so as to prevent errors in counting.

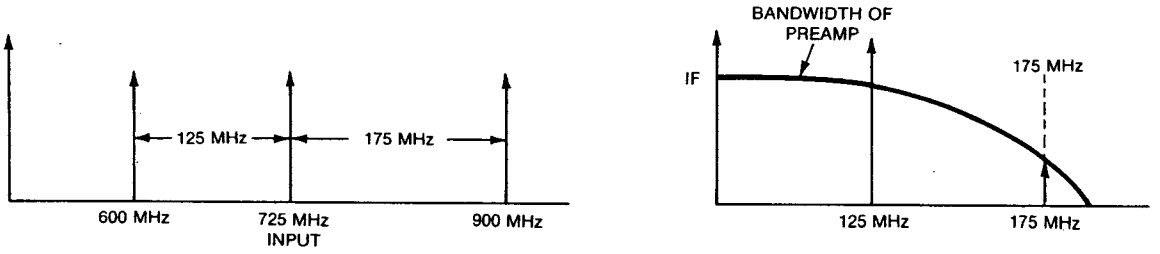

8-110. HP 5342A BLOCK DIAGRAM DESCRIPTION

8-111. *Figure 8-9* is a block diagram of the HP 5342A showing the major assemblies of the instrument. There are five major sections: The direct count section, the synthesizer section, the IF section, the time base section, and the control section. Each of these are discussed in the following paragraphs.

8-112. Direct Count Section

8-113. The direct count section consists of the A3 Direct Count Amplifier assembly and the A13 Counter assembly. Frequencies less than 500 MHz may be measured directly by the direct count input. The input signal, which is applied to the front panel BNC connector, is amplified and conditioned by the input amplfier on A3. The direct count main gate, also on A3, is enabled for a specific period of time (determined by the resolution selected) by the LDIR GATE signal from A17. During the time that the A3 main gate is enabled, counts pass through the main gate to Counter A on the A13 Counter assembly where they are totalized. At the conclusion of the gate time, the A14 Microprocessor assembly reads the contents of Counter A and sends the result to A1 Display along with the correct annunciators and decimal point. The microprocessor continually reads the status of a hardware flag on A17 which indicates the end of the sample rate delay. At the end of the delay, the measurement process begins again.

8-114. Synthesizer Section

8-115. The synthesizer section consists of a main oscillator and an offset oscillator to provide two output frequencies to A5 RF Multiplexer in the range of 300 MHz to 350 MHz which are locked to the counter's 10 MHz time base. The frequency is selected with 100 kHz resolution by the A14 Microprocessor. The main oscillator is formed by the A8 Main VCO assembly, the A9 Main Loop Amplifier assembly, and the A10 Divide-by-N assembly. The microprocessor controls the division factor N in A10 which determines the main oscillator frequency. The offset oscillator consists of the A4 Offset VCO assembly, the A7 Mixer/Search Control assembly, and the A6 Offset Loop Amplifier assembly. The offset loop is phase locked at a frequency 500 kHz below the main VCO frequency. *Figure 8-10* is a block diagram of the synthesizer section which is described in the following paragraphs.

8-116. Main Loop Operation

8-117. A buffered signal from the A8 Main VCO is fed back to the A10 Divide-by-N assembly. The division factor, N, is programmed by the A14 Control assembly and is chosen by the relation N= programmed frequency/50 kHz. For example, if the program requests a frequency of 346.7 MHz, then N would be equal to 6934 (=346.7/0.05). When the main loop is locked, the output of the divide-by-N circuitry on A10 is 50 kHz. This is compared to a 50 kHz signal which is derived

from the time base and the phase error is sent to the A9 Main Loop Amplifier. The phase error signals, available at XA10(1) and $\overline{(1)}$, are used by the main loop to drive the VCO frequency to the programmed frequency.

8-118. The A9 Main Loop Amplifier sums and integrates the two phase detector outputs of A10. The error signal is then passed through one of two low pass filters. When the HP 5342A is searching for an input signal in the range of 500 MHz to 18 GHz, the main loop VCO is programmed to step from 350 MHz to 300 MHz in 100 kHz steps in approximately 90 milliseconds. To achieve this fast search rate, a wideband low pass filter of approximately 2 kHz bandwidth is selected. When the counter is actually making a measurement by opening the main gate and counting the IF frequency, a narrow band low pass filter of approximately 100 Hz bandwidth is selected to achieve high spectral purity in the VCO output.

8-119. The error signal at the output of A9 drives the A8 Main VCO to a frequency which minimizes the error signal. Three buffered outputs are provided: one output is fed back to the A10 Divide-by N; another goes to the A5 RF Multiplexer; the third goes to the A7 Mixer/Search Control assembly and is used by the OFFSET LOOP to set the offset VCO to a frequency which is exactly 500 kHz below the Main VCO frequency.

8-120. Offset Loop Operation

8-121. The frequency of the main VCO and the frequency of the offset VCO are fed to a mixer on the A7 Mixer/Search Control asembly. The difference frequency at the output of the mixer is fed to a phase detector and a 500 kHz detector. The 500 kHz detector sends a search enable (HRSC EN) signal to the search generator on the A6 Offset Loop Amplifier if the offset VCO frequency is not 500 kHz less than the main VCO frequency. The search signal on A6 is a ramp waveform which drives the offset VCO to a frequency which is 500 kHz less than the main VCO frequency. When the 500 kHz detector on A7 detects the presence of 500 kHz, the search is stopped. The phase detector on A7 compares the difference frequency out of the mixer with a 500 kHz reference derived from the time base. The phase error signal is sent to A6.

8-122. The A6 Offset Loop Amplifier sums and integrates the two outputs of the phase detector on A7. This error signal keeps the offset VCO on a frequency which is 500 kHz below the main VCO frequency. To get the difference frequency out of the mixer on A7 into the capture range of the phase-locked loop formed by A7, A6, and A4, a search generator on A6 is turned on in the absence of a 500 kHz difference frequency. The generator sweeps the offset VCO over its range until the VCO is 500 kHz less than the main VCO (the LPOS Slope signal generated on A6, prevents the loop from locking on the upper sideband where the offset VCO is 500 kHz greater than the main VCO). At this point the search generator is disabled and the output of the phase detector on A7 keeps the loop locked.

8-123. The offset VCO has two buffered outputs: one goes to the A5 RF Multiplexer and the other is fed back to the A7 Mixer/Search Control assembly.

8-124. IF Section

8-125. The IF section amplifies the output of the U1 sampler and routes this IF to A13 for counting. It also provides digital outputs which indicate that the IF signal is of sufficient amplitude to be counted and that it is in the proper frequency range. The A25 Preamplifier assembly provides high gain amplification (approximately 42 dB) for the output of the sampler (the sampler has a –48 dB conversion efficiency which means that an input signal at a level of Ø dBm will yield an IF at approximately –48 dBm). The A11 IF Limiter assembly limits the amplitude of the IF signal. The A12 IF Detector assembly detects both the amplitude of the IF as well as the frequency of the IF. During the sweep, the microprocessor monitors the state of the 50 MHz—100 MHz detector output of A12 and stops sweeping when that detector is true. At the conclusion of the N determination the latched 25 MHz—125 MHz detector output is checked. If this detector is true, then the IF signal never varied beyond the 25—125 MHz range nor did it drop too low in amplitude. It the detector is false, then the computation of N may be incorrect and the algorithm specifies that the sweep start at a frequency 100 kHz lower than where it previously stopped sweeping.

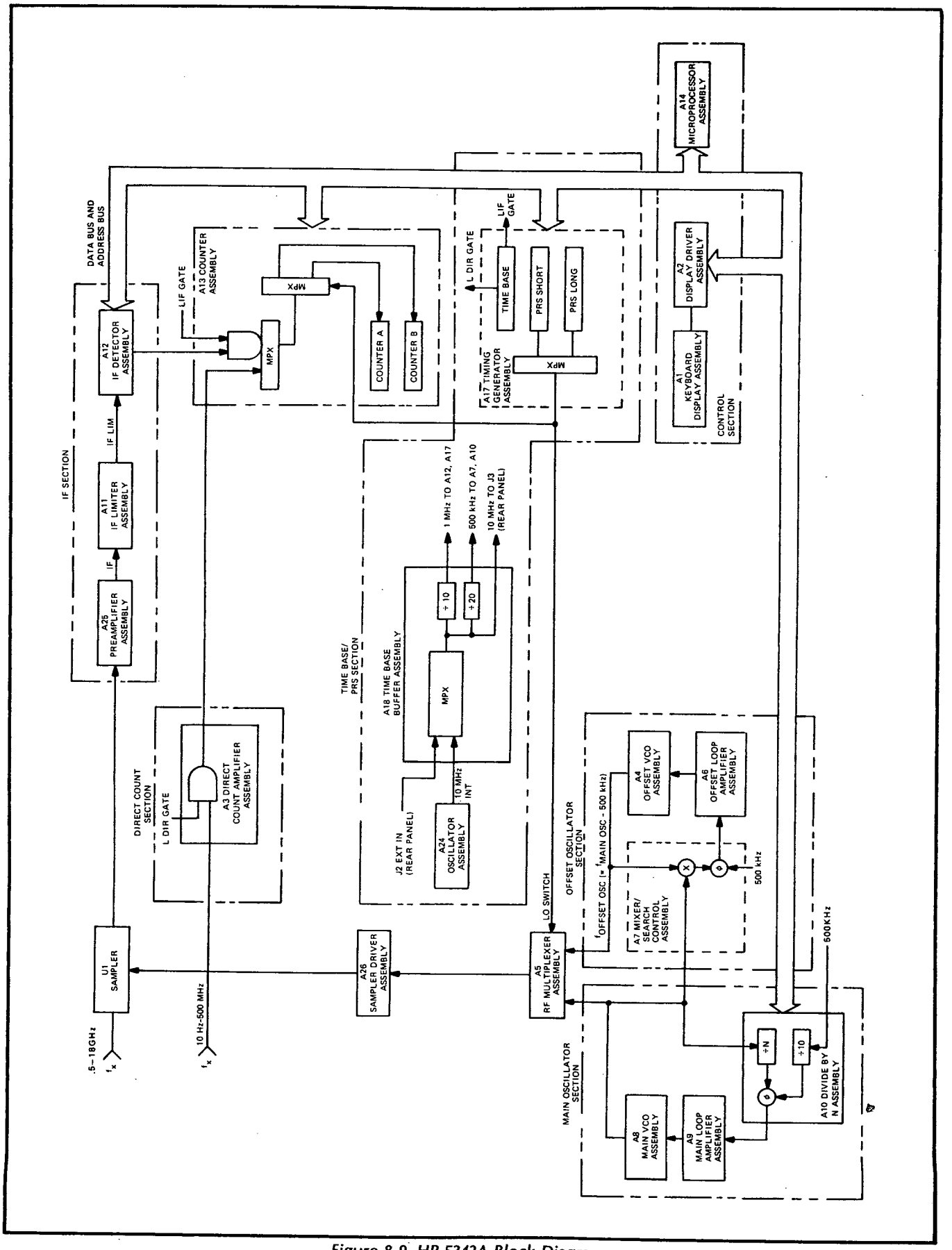

Figure 8-9. HP 5342A Block Diagram

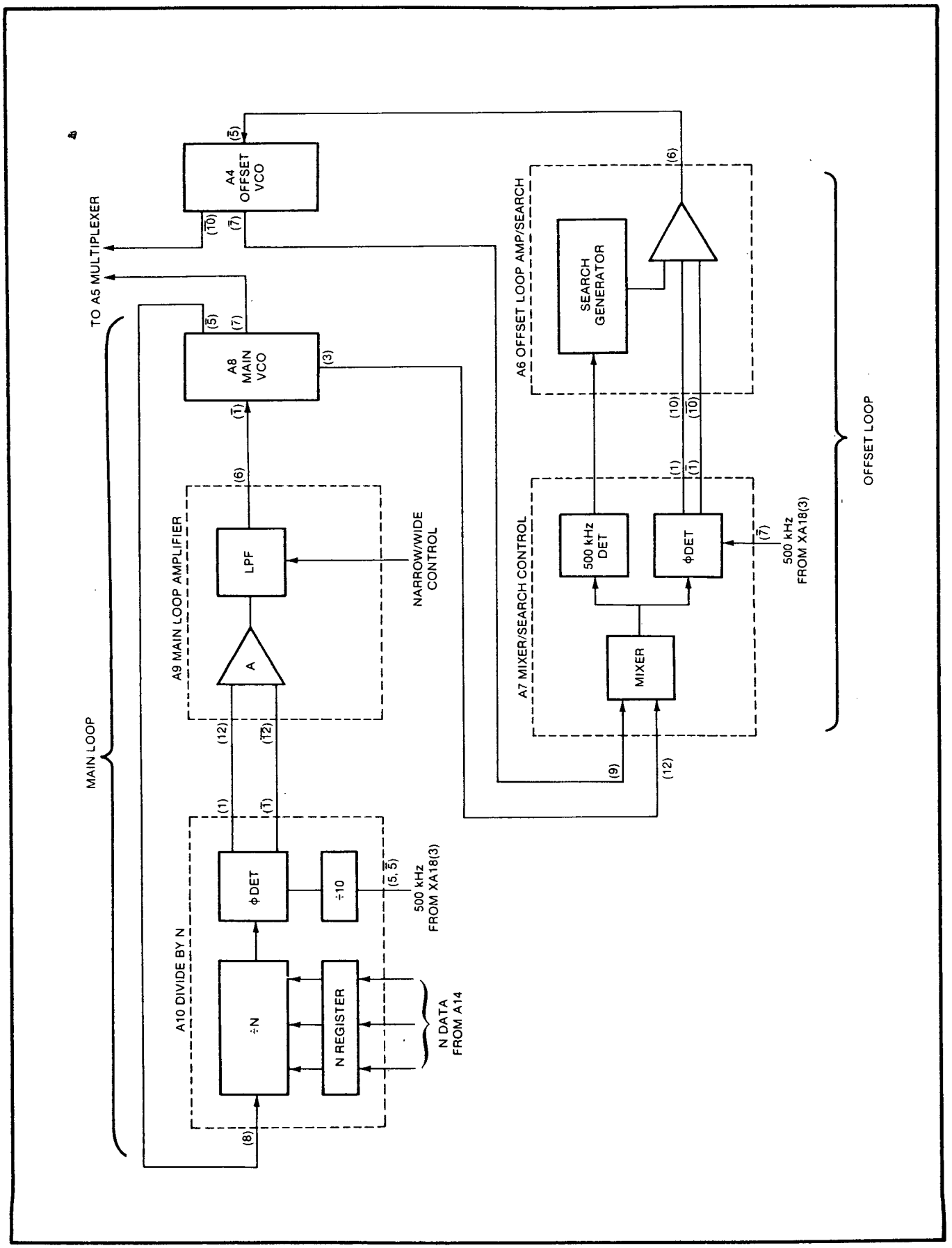

Figure 8-10. Block Diagram of Synthesizer Section

8-126. Time Base/PSR Section

8-127. The time base section consists of the A24 Oscillator assembly which provides a 10 MHz sine wave to the A18 Time Base Buffer assembly. A18 provides TTL compatible 10 MHz, 1 MHz, and 500 kHz outputs to the rest of the counter. The A17 Timing Generator assembly uses the 1 MHz signal to provide gate times from 1 microsecond to 1 second in decade steps as well as generate a pseudorandom sequence during the N determination portion of the algorithm. Based on the position of the rear panel FM switch, the microprocessor selects a short prs (360.4 ms long) for 20 MHz p-p FM tolerance (CW) or a long prs (2.096 seconds long) for 50 MHz p-p FM tolerance (FM).

8-128. Control Section

8-129. The control section is made up of the A14 Microprocessor assembly, the A2 Display Driver assembly, and the A1 Keyboard/Display assembly. The program stored in ROM on the A14 assembly controls the operating algorithm of the instrument. The A1 assembly is used by the operator to interface with the stored program. Via the A1 keyboard, the operator selects operating modes (AUTO, MANUAL, CHECK), resolution and offsets. The A1 assembly also displays measurement results. The A2 Display Driver assembly controls A1 and provides the interface with the A14 Microprocessor.

8-130. DETAILED THEORY OF OPERATION

8-131. The detailed theory of operation is provided in the following paragraphs in numerical order of the assemblies.

8-132. A1 DISPLAY ASSEMBLY AND A2 DISPLAY DRIVER ASSEMBLY

8-133. The A1 Display assembly and A2 Display Driver assembly shown in *Figure 8-24* operate together to provide the user interface with the microprocessor. For a description of microprocessor operation, refer to paragraph 8-228. The keyboard on the A1 Display permits the operator to input commands to the microprocessor. The display on the A1 Display is used by the microprocessor to display measurement results, error codes, and other information to the operator. As an example, consider what occurs when the SET key is pressed by the operator. Pressing the key generates an interrupt to the microprocessor. The program stops executing the current program and jumps to a subroutine to find out which device caused the interrupt and why. The subroutine determines that the keyboard generated the interrupt. Circuitry on A2 tells the microprocessor that the SET key was pressed. The program then sends commands to A2 to cause the light in the SET key to blink as well as the code to be displayed, both of which act as prompters to the user. All of this occurs very quickly and is virtually transparent to the user.

8-134. The A2 Display Driver assembly is driven by a 6 kHz clock (scan clock) formed by Schmitt trigger U5E, feedback resistor R7, and capacitor C5. This clock is continuously running and outputs a TTL signal with a positive pulse width of approximately 40 μs. The output of the scan clock goes through a jumper (which may be removed to allow testing with a logic pulser to simulate the clock) and drives decade counter U3. The outputs of U3 are decoded by U13C and U6 to reset the U3 outputs to all TTL low after 13 clocks have been counted. These 13 states correspond to the 11 digits and 2 annunciator lines which need to be driven in the display.

8-135. The output of the U3 counter passes through 3-state driver U6. The purpose of U6 is to force invalid states into column scanner U2 and U7 so that on power-up, (when LDVRST goes low) the display is blank. On reset, the input to U10D goes low and the control to U6(1) goes high, which forces U6 to the high Z state. Pull up resistors R2(C,D,G,F) put state 16 into U7 and state 7 into U2. Since these states are out of the normally operating range of the scanners, all display digits and annunciators are blanked.

8-136. In normal operation, U6(1) is low and the output of the 13 state counter drives BCD-to-decimal decoders U2 and U7. These two devices form a column scanner whose low output turns on, one at a time, A1 driver transistors Q13, Q10, Q9, Q8, Q7, Q6, Q5, Q4, Q1, Q2, Q11, Q12 for a period of approximately 166 μs (1/6 kHz). For example, when the 13 state counter reaches 0 1 1 1 (7), then U7(9) goes low, turning on transistor A1Q4 and applying +5.0V to the LED digit A1DS14. Whatever segment inputs are low will thus be momentarily lighted. The correct code to be input to the LED digit is stored in TTL RAM A2U11 and U8. U8 and U11 each can store sixteen 4-bit words. When the 13 state counter is in state 0 1 1 1, then the inputs to RAM U11 and U8 are at 0 1 1 1 and the desired digits code for DS14 is output, through A2U1 and U4, to the selected digit. Limiter resistors R8, R13, R15, R16, R6, R4, R11, and R14 limit the current through the LED segments when the NAND gate output (U4 and U1) goes low. When the 13 state counter reaches 1 0 0 0, then the input to U2 looks like Ø Ø Ø Ø and U2(1) goes low which applies +5.0 volts to Q1 and lights DS13. When the 13 state counter reaches 1 1 0 0 (12, 13th state since started at Ø), then the input to U2 is 0 0 1 0 and U2(5) goes low and one or more annunciator lights are turned on according to the code stored in RAM U11, U8.

8-137. HDSPWRT comes in at A2J1(3). When this signal is high, data is written into RAM U8, U11 from the microprocessor for display. When HDSPWRT goes low, the output of U13D is low and quad multiplexer U17 selects its "1" inputs. Thus, the output of the 13 state counter increments through 13 locations in RAM and causes the contents of RAM to be displayed. When HDSPWRT is high, U17 selects its "Ø" inputs. The write enable inputs to U11 and U8 pin 3 are enabled and data appearing on the DØ through D7 data lines is stored at the addresses appearing on the AØ through A3 address lines. Segments are labeled as shown below. DØ lines sends (a) segment information; D1 sends (b), D2 sends (c), D3 sends (d). Segments (a), (b), (c), and (d) are stored in U11. The D4 data lines sends (e) segment information, D5 sends (f), D6 sends (g), D7 sends decimal point. Segments (e), (f), (g), (dp) are stored in U8. For example, if it were desired to display 2 in the DS21 or least significant digit, then segments (a), (b), (g), (e), and (d) must be lighted.

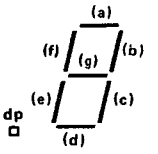

To light these segments the following action occurs. In address location 1 1 1 1 (the output of U17 is inverted in U11, 1 (=D1) 1 (=D2) Ø (=D3) 1 (=D4) are stored. In address location 1 1 1 1 in U8, 1 (=D1) Ø (=D2) 1 (=D3) Ø (=D4) are stored. When the 13 state counters puts out Ø Ø Ø Ø, then the output of U11 will be 1 1 Ø 1 (5, 7, 9, 11) and the output of U8 will be 1 Ø 1 Ø (5, 7, 9, 11). The column scanner has output U7(1) low and all other outputs high (U2(10) is also low but it is not connected to any digit). Thus +5.0 volts is applied to DS21 and the correct segment inputs to DS21 are grounded to turn on segments (a), (b), (g), (e), and (d) which forms a digit 2. The DØ—D3 data lines and AØ, A1 address lines are also connected from driver U17 to the Option 004 (DAC) circuit on A2 assembly, *Figure 8-25*. Refer to paragraph 8-340 for Option 004 circuit description.

8-138. Keyboard Operation

8-139. When a key (pushbutton switch) is depressed, it is not immediately recognized but must wait until the column scanner reaches that particular key. However, since the scan rate is 6 kHz, this is much faster than the operator can depress and withdraw his finger. When the column scanner places a low on the line connected to the key which has been depressed, a low pulse is generated on the output of A2U5(6). This pulse is called $\overline{\text{KEY}}$ and when low, indicates that a key has been depressed.

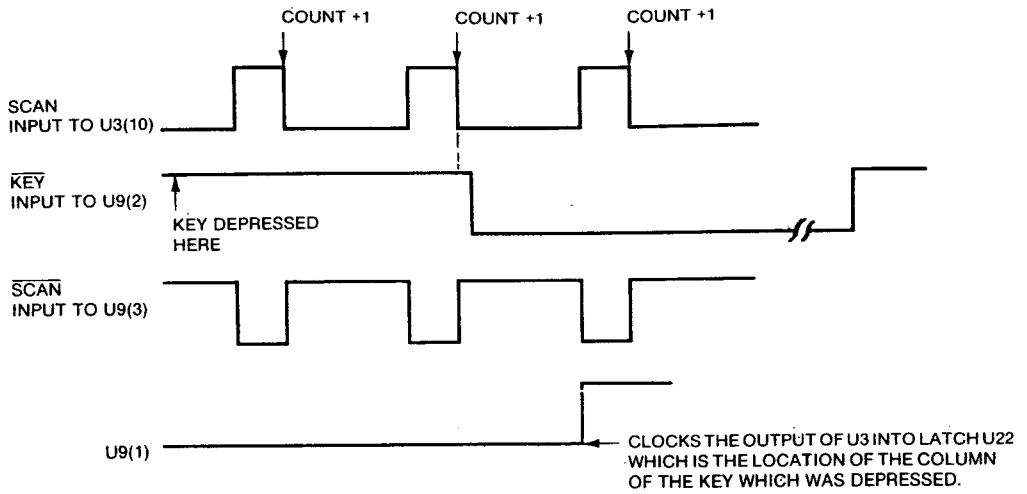

8-140. With $\overline{\text{KEY}}$ low and $\overline{\text{SCAN}}$ low, U9(1) goes high which clocks latch U22 and causes it to store the address (0000 to 1100) of the column of the key which was pushed. Since there are two keys per column, another line is used to indicate top or bottom row. The output of U9(1), which clocks U22, also clocks U19A. U19A(5) will be low if a top row key is pushed and will be high if a bottom row key is pushed. In this manner, the microprocessor determines exactly which key has been depressed.

8-141. Flip-flop U18A is also clocked by the output of U9(1). Its output at U18A(5) will be high anytime that a key is pushed. It is reset to low when the 13 state counter reaches the end of the scan at state 1100. The low signal at U2(5) causes the output of U9(10) to go momentarily low and reset U18A. The End of Scan signal at the output of U9(13) clocks U19B and, if U18A(5) is high, will clock a high into U19B(9). This output is the Key Down signal. Key Down high goes to U22(9, 10) and inhibits other addresses from being latched. U19B(9) is also used as part of the Recall subroutine. To recall a value, the recalled value will be displayed as long as its associated key is depressed. The program examines the output of U19B(9) and if it remains high, continues to display the recalled value. When the key is released, U19B(9) will be reset by End of Scan and the program, upon detecting this, stops displaying the recalled value and displays the original display (e.g., frequency).

8-142. Flip-flop U18B stores the interrupt. U19B(9) going high at the end of the scan clocks a high into U18B(9). This is inverted by U10 and becomes LIRQ which interrupts the microprocessor. The program jumps to a service routine which, upon determining that the keyboard has requested service, issues a low keyboard read command LKBRD. This signal enables three-state latch U22 which puts out its contents onto the bus. LKBRD also enables the three-state buffer U12 which puts out the contents of U19A, U18B, and the position of the front panel RANGE switch. The program determines which key was pressed and acts accordingly. The LKBRD also resets the interrupt flip-flop U18B.

8-143. Processor looks at J1(15) to check if operation is in direct mode (10 Hz—500 MHz) or 500 MHz—18 GHz mode.

8-144. Capacitor C7 is used to differentiate the positive transition of HDSPWRT to produce the write pulse to U8(3) and U11(3).

8-145. A3 DIRECT COUNT AMPLIFIER ASSEMBLY

8-146. The input signal is applied to the BNC connector and switch S23 on the A1 Display assembly as shown in *Figure 8-24* (upper left of A1 schematic). Switch S23 routes the signal through either a 1 MΩ path or a 50Ω path to A3. As shown in *Figure 8-26*, the Z switch transistors

Q7 and Q6 bias the 1 MΩ input at pin 8 of U7 and the 50Ω input at pin 7 of U7 to turn balanced amplifier U7 either on or off, depending upon which signal path has been selected by switch S23. The impedance select line biases pin 7 or 8 approximately -2 volts (50Ω) or -3.3 volts (1 MΩ).

8-147. The 50Ω signal path consists of 0.1 amp fuse F1 (3.5V rms maximum input), clamping diodes CR8, CR5, and the limiting diode bridge formed by CR3, CR4, CR6, CR7 which limit the output to 1 volt peak-to-peak.

8-148. The 1 MΩ path consists of ac coupling capacitor A1R13, A1C1, A2 compensation network C8, R13, clamping diodes CR1, CR2, source follower Q3, and emitter follower Q1. Field effect transistor Q2 is biased as a current source for Q3.

8-149. Balanced amplifier U7 provides complementary outputs of the input signal increased in amplitude by times 2. These complementary outputs drive differential amplifier U6 which provides amplification of times 10 so that the overall gain from U7 input to U6 output is approximately times 20. A portion of the output of U6 is integrated by U3, C17 to provide a dc voltage proportional to amplitude. This voltage provides AGC to U7 so that the input to Schmitt trigger U5 remains relatively constant. The output of U5 is a 0V to -650 mV signal which is divided-by-2 in U4 and divided-by-2 in U1. The main gate on U4 passes the output of U5 on to the dividers only when it is enabled by the LDIR GATE signal from A17 going low.

8-150. The DIRECT A output passes through EECL to TTL converter formed by Q8, Q9 to A13 where it is ready by the microprocessor. The DIRECT B output passes through EECL to ECL converter U2 to A13 where it is counted by the A counter.

8-151. HECL RSET high clears U4, U1 before LDIR GATE opens the main gate for counting.

8-152. A4 OFFSET VCO

8-153. The A4 OFFSET VCO (*Figure 8-27*) is essentially identical to the A8 MAIN VCO assembly described in paragraph 8-172, with the exception that A4 has one less buffer amplifier. The OFS OSC amplitude at XA4($\overline{10}$) should be approximately 600 mV rms and OFS OSC at XA4($\overline{7}$) should be approximately 300 mV rms. Measure with a high impedance RF millivoltmeter, such as the HP 411A.

8-154. A5 RF MULTIPLEXER ASSEMBLY

8-155. The A5 RF Multiplexer assembly shown in *Figure 8-28*, receives two input signals: MAIN OSC from the A8 Main VCO assembly at XA5($\overline{10}$) and OFFSET OSC from the A4 Offset VCO assembly at XA5($\overline{1}$). Upon command by the LO SWITCH signal from the A17 Timing Generator assembly, MAIN OSC (if LO SWITCH is TTL high) or OFFSET OSC (if LO SWITCH is TTL low) is gated to the output of A5 and becomes the LO FREQ signal which drives the A26 Sampler Driver.

8-156. The oscillator signals enter A5 at a level of approximately +4 dBm at XA5($\overline{1}$) for the OFFSET OSC and XA5($\overline{10}$) for the MAIN OSC. After passing through 6 dB matching pads formed by R8, R7, R6, and R22, R21, R20, both signals are amplified by differential amplifiers; U1 amplifies OFFSET OSC and U4 amplifies MAIN OSC. The amplified outputs pass through ac coupling capacitors C6 and C20, respectively, and then are either blocked or passed by diode switches. The offset channel switch is composed of CR3, CR1, CR2, and the main channel switch is composed of CR5, CR6, CR4. With the LO SWITCH signal TTL high, the base of Q3 increases to approximately 3.8 volts which decreases the current through the Q3 emitter. Since the differential amplifier formed by Q2, Q3 is driven by constant current source Q1, the current through the Q2 emitter increases since the total current must remain constant. This causes the voltage dropped across R27 to decrease (because the current decreased) so that the collector of Q3 is at -0.8 volts. Since the voltage dropped across R18 increases, the collector of Q2 goes to +0.8 volts. The -0.8 volts at the Q3 collector is passed through the decoupling network L1, L2, C2 which prevents the 300—350

MHz signal in one channel from passing through the switching network over to the other channel. A –0.8 volt at the cathode of CR1 causes CR1 to be foreward biased and CR2, CR3 to be reversed biased, thereby blocking the OFFSET OSC signal. The +0.8 volt at the cathode of CR6 reverse-biases CR6 and forward-biases CR5 and CR4, thus permitting the MAIN OSC signal to pass in to the differential amplifier U2. With LO SWITCH TTL low, the current through Q3 increases and the operation is reversed.

8-157. The output of the U2 differential pair drives common emitter amplifier U3 which uses one-half of a differential transistor pair. The output, at a level of approximately +15 dBm, is ac coupled through C25 and sent to the A26 Sampler Driver.

8-158. A6 OFFSET LOOP AMP/SEARCH GENERATOR ASSEMBLY

8-159. The A6 Offset Loop Amplifier/Search Generator assembly (*Figure 8-29*) consists of:

a. A filter and amplifier which condition the phase error signal from A7 for locking the offset loop.

b. A search signal generator which drives the offset VCO such that the difference frequency between the offset VCO and the main VCO is within the capture range of the offset phase-locked loop. A signal, called LPOS Slope, is generated on A6 which prevents the loop from locking up when the offset VCO is 500 kHz above the main VCO; this insures that the offset VCO is always 500 kHz *below* the main VCO.

8-160. The search generator consists of transistor Q4, Schmitt trigger NAND gates U1A, U1B, U1D, diodes CR3, CR4, and the integrator formed by operational amplifier U2 and integrating capacitor C10. This integrator is also used by the error signals from A7 and is part of the compensation for the phase-locked loop.

8-161. Variable resistors R1 (SWEEP CENTER FREQ) and R2 (SWEEP RANGE) are adjusted to provide a triangular waveform at test point TP1 of –4 to +4 volts which corresponds to a VCO search frequency range of approximately 380 MHz to 270 MHz.

8-162. With HSRCH EN low, both diodes CR3 and CR4 are reversed-biased and the search generator is effectively isolated from the integrator U2. With HSRCH EN low, the loop is maintained in a locked condition by the phase error signals at XA6(10) and XA6($\overline{10}$). These signals are summed and integrated by U2 and then filtered by the low pass filter formed by R21, C12, and R20. The error signal drives the offset VCO to maintain a constant 500 kHz offset.

8-163. Two voltage regulators convert the +15 and –15 volt inputs to +12 and –12 volts, respectively. The +12 volt regulator consists of transistor Q2, diode CR1, resistors R4, R6, and capacitors C1 and C3. The –12 volt regulator consists of transistor Q3, diode CR2, resistors R8 and R11, and capacitors C8 and C6.

8-164. When the 500 kHz detector on A7 detects that there is not a 500 kHz difference frequency present, the HSRCH EN at XA6(8) goes TTL high and enables U1A and U1B. Since U1D(13) is tied to +5V, it is already enabled. The threshold voltages for U1D(12) are 0.8 volts and 1.6 volts which means that a logic 1 condition is not recognized until the input to U1D(12) moves from below 0.8 volts up through 1.6 volts. A logic Ø condition does not occur until the signal moves from above 1.6 volts down through 0.8 volts. Assuming a 0.8 volt level at U1D(12) to start with, the operation is as follows: U1D(11) is high, which drives U1B(6) low and U1A(3) high. With U1A(3) high, Q4 is turned off and CR4 is reversed-biased since the voltage at U2 inputs is at +1.5 volts. Since U1B(6) is low, CR3 is forward-biased and sinks current from the integrating capacitor C10. This causes the voltage at the output of operational amplifier U2(6) to increase linearly until the voltage at U1A(2) crosses above 1.6 volts. With the output of U1A(3) high, the LPOS Slope signal is high and prevents the loop from locking up on an offset VCO signal which is 500 kHz higher than the main VCO. This is so because with LPOS Slope high, the offset VCO is changing from its high fre-

quencies to lower frequencies. A 500 kHz difference frequency resulting from this sweep would be on the upper sideband. With LPOS Slope low, the offset VCO is changing from low frequencies to higher frequencies. A 500 kHz difference resulting from this sweep only occurs if the offset VCO frequency is 500 kHz less than the main VCO frequency.

8-165. When the sweep ramp present at U1D(12) crosses above the upper threshold of 1.6 volts, the output of U1D(11) goes low, U1B(6) goes high and U1A(3) goes low. This causes Q4 to conduct which forward-biases CR4. Since U1B(6) is high, CR3 is reversed-biased. Current is now supplied through CR4 to the intergrating capacitor C10. This causes the output of U2(6) to decrease linearly. Since U1A(3) is low, LPOS Slope is TTL low and the loop is allowed to lock once a 500 kHz difference frequency is detected on A7. When lock is achieved, HSRCH EN goes TTL low which causes U1B(6) and U1A(3) to both go TTL high, thereby reverse-biasing both CR4 and CR3. The voltage at the output of U2(6) is therefore maintained at that level which achieved lock. The timing diagram for this operation is shown in *Figure 8-11*.

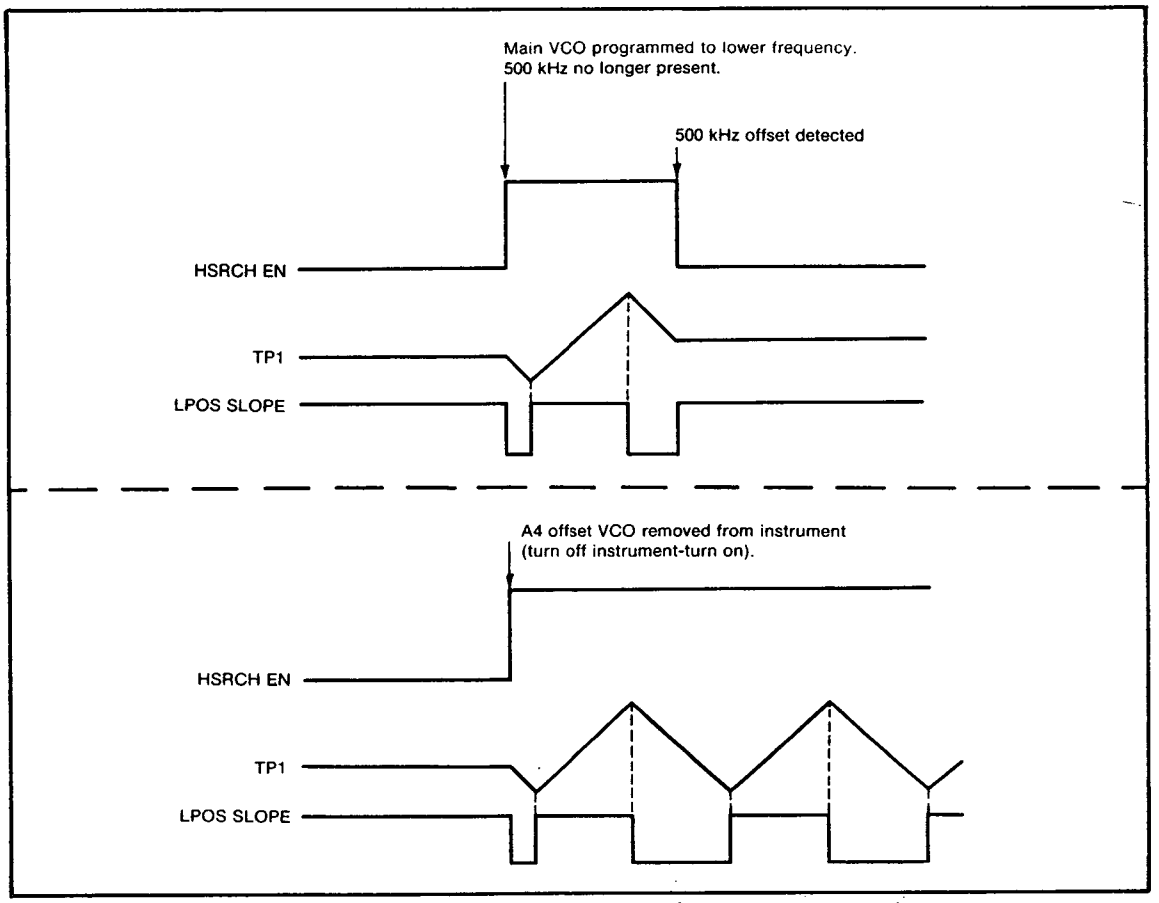

Figure 8-11. Timing Diagram of A6 Search Generator Operation

8-166. A7 MIXER/SEARCH CONTROL ASSEMBLY

8-167. The output of the main loop VCO, which comes in at XA7(12), *Figure 8-30*, is amplified by differential pair U4 to a level of approximately +5 dBm and is half-wave rectified by transistor Q6 whose base-emitter junction is used as the rectifying diode. The output of the offset VCO, which comes in at XA7(9), is amplified by U3 to a level of approximately 0 dBm and is applied to the base of Q1. Since Q1 is being alternately turned on and off by the Main VCO signal appearing at the Q1 emitter, the output appearing across R15 contains the sum and difference frequencies $f_{MAIN} \pm f_{OFFSET}$ (if $f_{MAIN} > f_{OFFSET}$) or $f_{OFFSET} \pm f_{MAIN}$ (if $f_{OFFSET} > f_{MAIN}$). Since Q2 is a low frequency

transistor, the sum frequency is attenuated and only the difference frequency is amplified. At test point TP1, the difference frequency at an amplitude of Ø to 5V is available.

8-168. To insure that the offset phase-locked loop locks up only when a 500 kHz difference frequency is produced by the Main VCO being 500 kHz greater (not less) than the offset VCO frequency, three control signals are produced which control the search enable flip-flop U2. When the HSRCH EN output at XA7(2) is TTL high, the triangle search waveform on A6 is enabled. HSRCH EN goes low when the U2(3,4,5) inputs are all low. This occurs when the following conditions are met:

a. The output of the 500 kHz detector is low.
b. The U1(2) equal frequency output is low.
c. The LPOS Slope signal from A6 is low.

8-169. The 500 kHz detector consists of the low-pass filter formed by resistors R5, R6, and capacitor C16, a full-wave rectifier formed by diodes CR1, CR2, and capacitor C22, and emitter follower Q3. For signal less than approximately 1 MHz, the full-wave rectifier produces a level at the base of transistor Q4 sufficient to turn Q4 on. This developes a voltage across resistor R3 which turns transistor Q5 on. The collector of Q5 then drops from a TTL high to a TTL low.

8-170. U1 is a phase detector which produces fixed amplitude variable duty cycle pulse trains at its two outputs. The duty cycle of the pulse train is proportional to the phase difference between the signals at its inputs. The OFFSET $\Delta\phi 1$ and OFFSET $\Delta\phi 2$ outputs are summed, integrated, and amplified by A6 to provide a dc control voltage to the A4 OFFSET VCO. When the frequency at U1(1) is less than or equal to the 500 kHz reference frequency at U1(3), U1(2) goes TTL low. A TTL low at U2(4) is necessary but not sufficient to disable the search waveform on A6.

8-171. The third input to the NOR gate on U2 is the LPOS Slope signal from A6. This signal is TTL low when the search signal from A6 is sweeping the A4 VCO from low frequencies to high frequencies. Consequently, if a 500 kHz difference frequency is obtained and LPOS Slope is low, then the offset VCO must be 500 kHz less than the main VCO.

8-172. A8 MAIN VCO ASSEMBLY

8-173. The synthesizer uses two voltage controlled oscillators which are essentially identical in operation (A8 and A4). The oscillator circuit shown in *Figure 8-31* consists of transistor Q1, feedback capacitor C7, and varactor diodes CR1 and CR2. Resistors R14 and R13 provide dc bias for Q1. Capacitor C11 resonates with the inductance of ferrite bead E1 to provide a low impedance path to ground for frequencies in the range of the VCO, thus eliminating parasitic oscillations. Transistor Q1, which is operating a common base mode for the VCO frequency range, has a portion of the output signal at its emitter fed back to its collector via capacitor C7. This positive feedback sets up oscillations at a frequency equal to the parallel resonant frequency of the tank circuit formed by varactor diodes CR1 and CR2 and the inductance of a metal trace on the A8 board. By changing the MAIN VCO CONTROL voltage at A8($\overline{1}$), the capacitance of the varactors change which changes the resonant frequency of the tank circuit and hence the frequency of oscillation. The modulation sensitivity of the VCO is approximately -12.5 MHz/volt. For a MAIN VCO CONTROL voltage at A8($\overline{1}$) of +2 volts, the VCO frequency should be approximately 300 MHz while a control voltage of -2 volts results in an output frequency of approximately 350 MHz.

8-174. A voltage regulator, consisting of 11-volt Zener diode CR3, transistor Q2, resistors R21, R22, R23, and capacitor C1, is used to provide low noise dc power to the oscillator circuit since any noise on the power supply of the oscillator will degrade the oscillator's spectral purity. Potentiometer R22 is used to adjust the output voltage of the voltage regulator circuit so that the free-run frequency of the VCO (i.e., the frequency with Ø volts at the MAIN VCO CONTROL A8($\overline{1}$) input) is 325 MHz ±2 MHz. The nominal voltage which achieves this free-run frequency is 8.5 volts and is measured at the junction of C20 and CR2. Inductor L8, capacitors C23 and C16, and resistor R19 provide further filtering for the dc power to the VCO.

8-175. The output of the VCO is sent to three buffer amplifier U1, U2, and U3. Capacitor C4 is a dc blocking capacitor. The differential transistor pairs contained in U1, U2, and U3 provide +6 dB, +8 dB, and +6 dB gain, respectively. The gain is determined by the dc current flowing through the emitters of the transistors. This current is set by the networks connected to pin 3 of the IC. Decoupling networks L7 and C15, L1 and C3, L4 and C8, L11, C22, C24, C25, C26 isolate the -5.2 volt power from the RF signal. Decoupling networks L5 and C10, L2 and C5, L9 and C14, and L12, C18, C27, C28, C29 isolate the +5 volt power from the RF signal. The output of each buffer amplifier, after removal of the dc component by dc blocking capacitor C17, C6, or C12, is transmitted to other parts of the instrument over a 50Ω microstrip transmission line. The ground plane of the microstrip board is connected to the ground plane of the motherboard. The output at XA8($\overline{5}$) and XA8(3) should be approximately 250 mV rms while the output of XA8(7) should be approximately 500 mV rms.

8-176. A9 MAIN LOOP AMPLIFIER ASSEMBLY

8-177. The two variable duty cycle pulse outputs from the phase detector on A10, Main $\Delta\phi 1$ and Main $\Delta\phi 2$, are summed and integrated by U2 on the A9 Main Loop Amplifier assembly, shown in *Figure 8-32*. Bidirectional switch U3(B, C, and D) controlled by D flip-flop U1B, selects the compensation for the phase-locked loop by selecting one of two feedback paths around operational amplifier U2 and by selecting one of two low pass filters in the output. When the HP 5342A is searching for an input signal, the wideband filter is selected. When the HP 5342A is making an actual measurement, the narrowband filter is selected.

8-178. When the least significant bit of the data bus from A14(DØ), is a logic 1 and the LPD Write address is decoded on A14 so that LPD Write goes high, then U1(8) goes low which selects the wideband filter consisting of inductors L1, L2, capacitors C2, C12, C16, C11, and C1. With U1(8) low and U1(9) high, transistor Q3 is turned on and provides +5.6 volts to control pins U3(6) to turn on the switch; transistor Q2 is turned off, thus providing a -5.6 volt level to control pins U3(5) and U3(12) to turn off the switch.

8-179. When DØ is a logic Ø and LPD Write goes high, U1(9) goes low and U1(8) goes high. This selects the narrowband filter consisting of L3, C8, C9, and C10 and also selects the R15 feedback resistor connected to U2. With U1(9) low, Q2 is turned on so that +5.6 volts is applied to control pins U3(5) and U3(12) to turn on the switch. With U1(8) high, Q3 is off and -5.6 volts is applied to control U3(6) to turn off the switch.

8-180. The voltage regulator consisting of transistor Q4, diode CR4, resistors R10, R11, and capacitor C17 converts +15 volts to +5.6 volts and the voltage regulator consisting of transistor Q1, diode CR1, resistors R1, R3, and capacitor C3 converts -15 volts to -5.6 volts.

8-181. A10 DIVIDE-BY-N ASSEMBLY

8-182. The A10 Divide-by-N assembly is essentially a programmable frequency divider and phase detector. As shown in *Figure 8-33* the output of the A8 Main VCO enters at DIV N XA10(8), and is initially divided by two by the ECL D flip-flop U6. The divider chain formed by U12, U9, U13, U14, and U8 divides the output of U6(4) by N. The division factor N is programmed from the A14 Microprocessor assembly via the data bus lines. The output of the divider chain goes from U8 through U3B to the U2 phase comparator where it is compared to a 50 kHz reference frequency. The phase error outputs of the U2 phase comparator, MAIN $\Delta\phi 1$ and MAIN $\Delta\phi 2$, are conditioned by the A9 Main Loop Amplifier and cause the A8 MAIN VCO to go to that frequency which, when divided by N in the divider chain on A10, produces a 50 kHz output.

8-183. Registers U10, U15, and U7A provide storage for the BCD encoded N data sent from A14 and registers U16, U11, and U17 provided buffer storage for the N data. Decade divider U1 outputs a 50 kHz reference frequency to U2 against which the N divided VCO frequency is compared.

8-184. The N divider chain formed by U12, U9, U13, U14, and U8 is programmed by the A14 Microprocessor assembly with a 4-digit positive-true BCD encoded number which is the 9's complement of the desired main VCO frequency. The main VCO frequency may be programmed with 100 kHz resolution. To program the main VCO to a frequency of 342.6 MHz, for example, the program would want N to be 6573 (9's complement of 3426). The actual overall division factor is

$$\frac{342.6}{0.050} = 6852$$

8-185. Since the data bus is only 8-bits wide, the 4-bit BCD encoded N number is divided into two 2-bit bytes. The two more significant bits form the upper byte and the two lower significant bits form the lower byte. The upper byte is first loaded into U17 when LSYH, decoded on A14, goes high. Since the range of VCO is 270 to 380 MHz, the most significant digit of the N number will be either a 6 or 7 (9's complement of 3 and 2, respectively). In BCD, this means that only the least significant bit of the BCD encoded most significant digit of the N number need be sent. If the most significant digit of N is 6, then the D4 input will be a low. If MSD of N is 7, then D4 will be high. U7A stores the D4 bit and presents it to U8 which represents the most significant digit of the N number.

8-186 The lower byte is loaded into U16 and U11 when LSYL, decoded on A14, goes high. The data, which has been temporarily stored in U16, U11, and U17, is next transferred to U10, U15, and U7A by the operation of U4A and U4B. When LSYL goes high, a high is clocked into U4A(5) and is presented to U4B(12). The next positive transition at U4B(11) causes U4B(8) to go low, which clears U4A(5). The following positive transition at U4B(11) then clocks U4B(8) high. The low to high transition of U4B(8) loads the data into U10, U15, and U7A. *Figure 8-12* shows the timing of this operation.

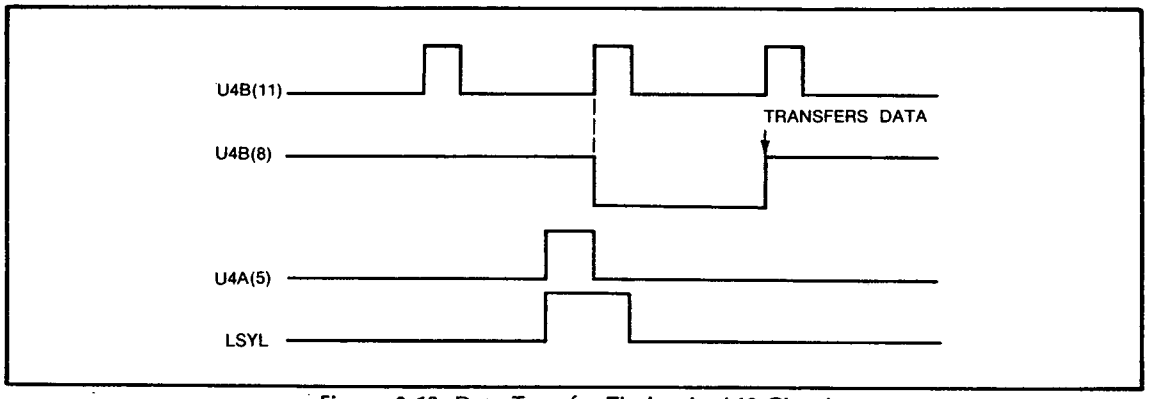

Figure 8-12. Data Transfer Timing in A10 Circuit

8-187. For example, if the program wants to set the main VCO to 342.6 MHz, the following data would be sent:

D7	D6	D5	D4	D3	D2	D1	D0	CONTROL SIGNAL
1†	d*	d*	1	0	1	0	1	LSYH

results in 6 in U8 (9's complement of 3)

5 (9's complement of 4)

*don't care digits
†not check if 1 (check if = 0)

This would be followed by:

D7	D6	D5	D4	D3	D2	D1	D0	
0	1	1	1	0	0	1	1	LSYL

7 (9's complement of 2)

3 (9's complement of 6)

8-188. The most significant bit in the upper byte is used to indicate the CHECK condition. If U17(12) is low, the D flip-flop U5 is enabled and the output of U6 is again divided by two. In CHECK mode, the main VCO is programmed to 300 MHz. The CHECK signal at XA10($\overline{11}$) is 300 MHz divided by four so that the 5342A displays 75 MHz in CHECK. In CHECK, the following outputs should be present:

U16(15)	1	LSB	Least significant BCD digit (9's complement of Ø)
U16(10)	Ø		
U16(2)	Ø		
U16(7)	1	MSB	
U11(7)	1	LSB	Digit 2 (9's complement of Ø)
U11(2)	Ø		
U11(15)	Ø		
U11(10)	1	MSB	
U17(2)	1	LSB	Digit 3 (9's complement of Ø)
U17(5)	Ø		
U17(7)	Ø		
U17(10)	1	MSB	
U17(15)	Ø	—	Most significant digit
U17(12)	Ø	—	CHECK

8-189. Before the divider chain formed by U12, U9, U13, U14, and U8 can be explained, the two following divide-by-N techniques must be discussed:

a. Two modulus prescaler technique.
b. A counter (divider) chain utilizing 9's complement.

8-190. Two Modulus Prescaler Technique

8-191. The two modulus prescaler technique is illustrated below.

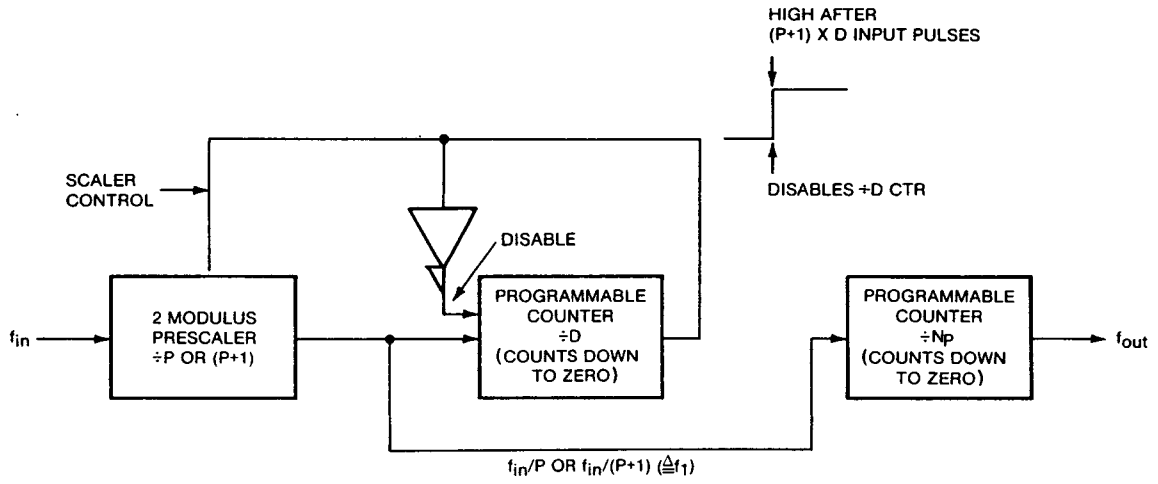

8-192. At first, the scaler control line is set to a low level so that the two modulus prescaler can operate as a ÷ (P+1) prescaler. Therefore, it generates a pulse every P+1 input pulses. After (P+1) × D input pulses occur, the second counter (÷D) reaches zero since it was preprogrammed to D at first. When the content of the second counter (÷D) gets to zero, it generates a pulse which changes the level of the scaler control line high and disables the ÷D counter (itself) at the same time. So, actually, the output of ÷D is not a pulse but a level change. Therefore, after this change occurs, the ÷D counter stops counting and keeps the new state which lets the two modulus prescaler operate as a ÷P prescaler.

8-193. When the level change occurs, the content of the ÷Np counter (which was preprogrammed to Np) is Np-D since D pulses have passed by so far. So, the ÷Np counter will reach zero after receiving (Np–D)•P input pulses (f_{in}). As soon as the ÷Np counter gets to zero, it generates a pulse at f_{out} terminal.

8-194. Therefore, the total input pulses (f_{in}) necessary to get one output pulse is:

$$(P+1)\bullet D+p\bullet(Np-D) \quad (1)$$

8-195. For example, if we choose 10 as P and 100A + 10B + C as Np, equation (1) becomes as follows:

$$11D+10(100A+10B+C)-D$$
$$=1000A+100B+10C+D \quad (2)$$

NOTE

The output is also used as a loading pulse to initiate the next dividing cycle.

8-196. Now, we have a complete programmable divider chain which can be programmed to any dividing ratio expressed by equation (2). The only limitation on this technique is as follows:

$$Np \geq D \quad (3)$$

8-197. This limitation doesn't matter for our application because NP≥299≥9≥D.

8-198. Counter (Divider) Chain Utilizing 9's Complement

8-199. A counter chain utilizing 9's complement numbers is illustrated below. In the explanation above, we used down counters to achieve ÷D and ÷Np. In the actual circuit, however, up counters (74LS160) are used for that purpose. The up counter generates a positive pulse when used for that purpose. The up counter generates a positive pulse when it reaches a state 9. Therefore, a divide-by-D can be realized if it is preprogrammed to 9-D at first. Then, it generates a pulse after getting D input pulses. One comment to note is that after generating an output pulse (after getting D pulses), it will operate as a divide-by-10 divider unless it is present (loaded to D again).

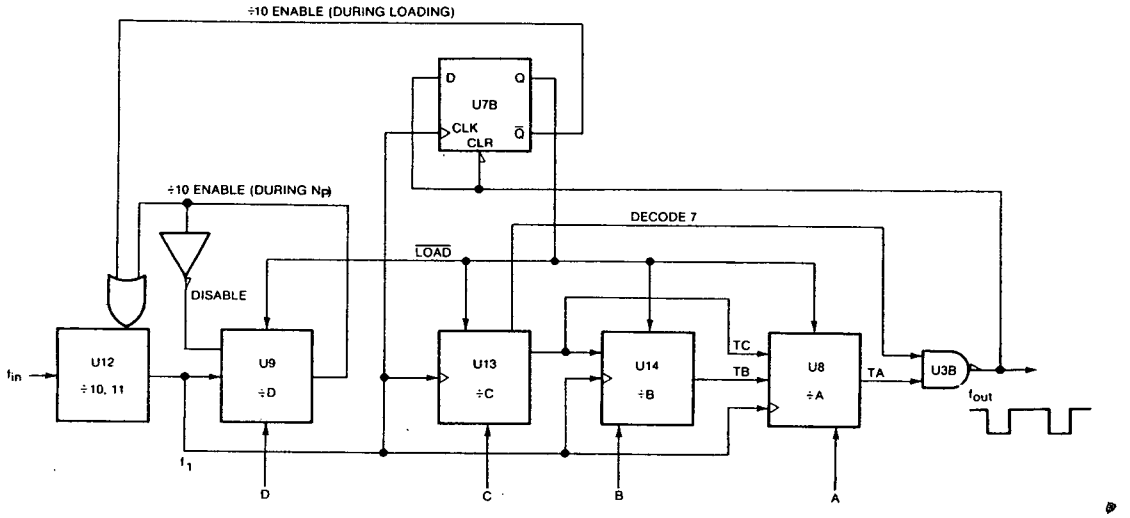

Remarks:
1. TA, TB, and TC are outputs of ÷A, ÷B, and ÷C.
2. TC for ÷A is look forward connection.
3. ÷B and ÷C operate as divide-by-10 after their first dividing cycle.
4. A, B, C, and D are numbers to be loaded.
5. U9 is preset to 9 in check. Output is high so it is always disabled and always ÷10.

8-200. A two-pulse period of f_1 is used to load the divider chain since one pulse period is not long enough to load the divider chain. The load pulse is provided by U7B. As soon as the f_{out} pulse (negative pulse) appears, LOAD goes low because of CLR input and stays low when the next f_1 pulse comes in because of the low input to D input. LOAD goes high when the second f_1 comes in because of a high input to D input. As long as LOAD is low, the counter chain is inhibited and the state of each divider agrees with the number to be loaded. Since we use a two-pulse period for loading, we have to decode 997 (999-2) for the ÷Np chain to get a correct dividing ratio as a whole. The BCD output of U13 is decoded to detect 7 for this purpose. The output of U8 which corresponds to 99X (X = don't care) is AND'ed with the decoded 7 to get the f_{out} pulse. Since a NAND gate is used, the output pulse is a negative pulse.

8-201. When CHECK mode is selected, the MPU writes to the A10 Divide-by-N assembly to enable D flip-flop U5 and to select a 300 MHz main oscillator frequency. With LSYNHI going low, bit D7 low at U17(13) is clocked in to cause U17(12) to go low, thus enabling U5(÷2). When CHECK is not selected, U17(12) is high so that U5 is disabled and the CHECK output at XA10(11) is inhibited.

8-202. A11 IF LIMITER ASSEMBLY

8-203. The A11 IF Limiter assembly, shown in *Figure 8-34*, provides an additional 14 dB gain to the IF signal over a bandwidth of 0.1 to 175 MHz. For high amplitude signals, the output of A11 is amplitude limited. The 14 dB amplification is provided by differential pair U2. Potentiometer R1, "AMP", is used to maximize the gain through U2 by balancing the currents through the differential pair. The 75 MHz CHECK signal from A10 enters the IF circuitry at XA11($7, \overline{7}$). CHECK should not be selected when a signal at the type N input connector is present.

8-204. The A11 assembly also generates a LPWR RST signal which is sent to the A25 Preamplifier assembly to control attenuation for Options 002 and 003. This signal, when low, resets an RS latch on A25 which causes input attenuation, (provided by pin diode attenuators in the Amplitude Option 002 and Extended Dynamic Range Option 003) to be reduced by approximately 15 dB. The attenuation is increased by 15 dB by a detector on A25 which detects when the signal level into the counter exceeds +5 dBm.

8-205. As shown in *Figure 8-34*, detecting diode CR1 and capacitor C2 detect the negative half-cycle of the IF signal. This dc level is sent to voltage comparator U1 which compares the detected level with a reference level set by the "DET" potentiometer, R14. For input signals greater than approximately -15 dBm, the detected IF appearing at U1(3) will be more negative than the reference voltage at U1(2) and the output at U1(7) will be TTL high. When the input level to the counter drops below about -15 dBm, U1(7) will go TTL low which means that LPWR RST is low. The LPWR RST signal causes the RS latch on A25 to be reset, thus reducing the attenuation of the pin diode attenuator if it was set initially by a high level signal (greater than +15 dBm). The pin diode attenuators are present only when the Amplitude Option 002 or Extended Dynamic Range Option 003 is present. Of course, when neither option is present, the LPWR RST has no effect. Resistor R4 on U1 provides hysteresis of about 1 dB in IF signal amplitude so that the output of U1 does not go high again until the IF amplitude increases by 1 dB over the level where it caused LPWR RST to go low.

8-206. A12 IF DETECTOR ASSEMBLY

8-207. The A12 IF Detector assembly shown in *Figure 8-35*, further amplitude limits the IF signal by amplifying it an additional 28 dB before sending it to the A13 Counter assembly to be counted. A level-detecting diode detects if the input signal level is of sufficient amplitude to be counted. A digital filter provides two outputs which indicate: 1) the IF is in the range of 48 MHz to 102 MHz, and 2) the IF is in the range of 22 MHz to 128 MHz. The program reads these filter outputs and stops the sweep when the IF is in the range of 48 MHz to 102 MHz. The 22 MHz to 128 MHz output is latched and is reset if the input power to counter drops below a preset level or if the IF leaves the range of 22 MHz to 128 MHz. This output is examined at the conclusion of the N determi-

nation routine to insure that the count during the prs was not invalidated by a power drop-out or excessive FM deviation.

8-208. The IF signal enters differential pair U2 and is amplified by approximately 14 dB. The output at U2(5) passes through a 125 MHz low pass filter formed by C5, L1, C10, L2, C7, and is detected by CR1 and C1. The voltage across C1 is presented to the inverting input of voltage comparator U1, which, due to the positive feedback provided by resistor R9, exhibits approximately 5 mV hysteresis. The OFFSET potentiometer R7 is adjusted so that the output of U1(7) goes low when the input signal to the counter drops below -32 dBm (for a 1 GHz input).

8-209. The other IF output of U2, U2(8), is ac coupled through C11 to differential pair U4 where it is amplified by another 14 dB. Potentiometer R12, (B2) is used to equalize (balance) the currents through the two emitters of the transistor pair. This is done by adjusting R5 for maximum gain through the stage. Potentiometer R2, (B1) is adjusted in a similar manner. U4 has two outputs: U4(5) and U4(8). The output at U4(5), IF COUNT, appears at XA12$\overline{(8)}$ and is sent to the A13 counter to be counted. The output at U4(8) is ac coupled by capacitor C16 to a digital filter.

8-210. The digital filter consists of U6, U5, U10, U8, U9, U11, U14, and U15. The filter counts the IF signal for a period of 4 microseconds and, based on the number of counts totalized during the 4 microseconds, sets two qualifiers which indicate if the IF is within the necessary frequency range. The counters are reset every 8 microseconds and the counting of the IF begins again. This process of counting the IF for 4 microseconds, setting the qualifiers, and resetting the counters after 8 microseconds occurs continuously.

8-211. The IF signal output is prescaled by 4 in U3A (÷2) and U3B (÷2). The ECL output of U3(15) is translated to TTL levels by transistor Q1. This signal is then counted for 4 microseconds. The NOR gate U6 is enabled for a period of 4 microseconds by U6(2) going low for 4 microseconds. This 4-microsecond gate is generated by divider U15 which divides a 1 MHz input by 8. The input is from the A18 Time Base Buffer. During the 4-microseconds gate time, the count is totalized by binary counters U5 and U10. The contents of the counters are decoded by U8, U9 such that if the IF frequency is in the range of 48 MHz to 102 MHz (the U5 and U10 counters count 48 to 102 counts during the 4-microsecond gate), U6(13) [TP5] will be high. If the IF is in the range of 22 MHz to 128 MHz, U6(10) [TP6] will be high. Dual flip-flop U13 is loaded with this qualifier information every 8 microseconds by a clock signal from U11(12) [TP4]. After a 1-microsecond delay, the U5, U10 counters are reset by a low level from U14(6). *Figure 8-13* shows the timing for the filter.

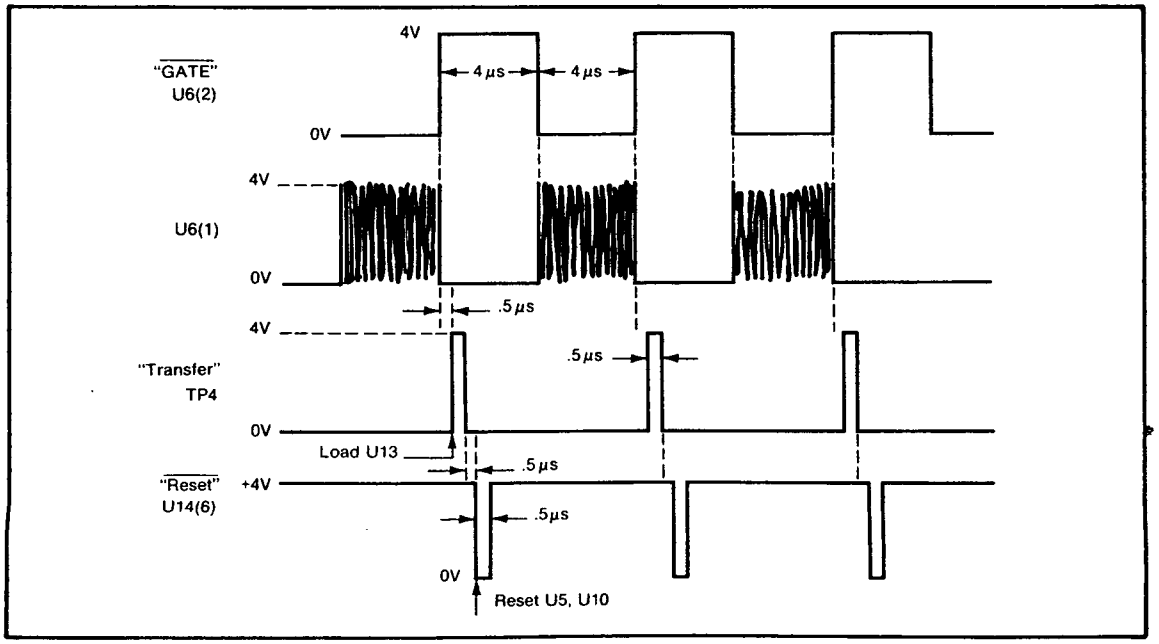

Figure 8-13. Filter Timing on A12 IF Detector

8-212. When the instrument is sweeping, the A14 Microprocessor issues LPDREAD which enables the three-state buffer/driver U12, and data from A12 is placed onto the data bus. The 48—102 MHz detector output (D6) is examined and when D6 is low (TP8 high), the microprocessor stops sweeping the main oscillator. After the sweep has stopped, the microprocessor issues LPDWRT which sets the U7(11) output of the latch formed by U7C and U7D to the low state. U7(11) [TP10] goes low when LPDWRT goes low since U13(5) is high (since U6(13) is high, then U6(10) must also be high).

8-213. The program then begins the N determination. At the conclusion of the N determination, the microprocessor sends LPDREAD and examines the latched 22—128 MHz detector D7. If the input power has dropped below -32 dBm or if the IF has exceed the range of 22 MHz to 128 MHz, then U13(5) will have been low at some time and the U7(11) output of latch U7C, U7D will have been reset to a high. If the D7 bit read by the microprocessor is low, then the N determination is considered invalid and the sweep routine is re-entered at a point 100 kHz lower in frequency than when it previously stopped searching.

8-214. At different points in the algorithm, the microprocessor issues LPDREAD and examines bit D4, LOVL. If this bit is high, then the input signal level to the counter exceeds +5 dBm and the microprocessor sends dashes (— — — —) to the 5342A display.

8-215. A13 COUNTER ASSEMBLY

8-216. The IF Count signal enters the A13 Counter Assembly shown in *Figure 8-36* at XA13(17) and is capacitively coupled via C10 into the main gate of the counter, U11C. U11 is a high-speed ECL AND gate. When U11(9) and U11(10) are both low (-0.8V = high; -1.5V = low), the gate is enabled and the IF Count signal is passed through the gate to be counted. Flip-flop U4B selects either the IF Count signal at XA13(17) or the Direct B signal from the direct count amplifier at XA13(14) to be counted. If in direct count mode, the microprocessor sets the D1 bit to logic Ø and writes to the counter so that LCTRWRT (low counter write) will clock a logic Ø into U4(9). When operating in the 500 MHz—18 GHz range, D1 will be logic 1 and the U4(9) output will be a logic 1. This enables U11B and disables U11C.

8-217. There are two operating modes, one during and one after acquisition. During acquisition the A5 multiplexer is switched between the two LO's. In synchronism with the A5 multiplexer switching, the IF signal on the A13 Counter assembly is switched between counter A (U17, U13, and U1) and counter B (U18, U14, and U2). Thus, counter A accumulates counts only during the time that the main VCO is producing the IF and counter B accumulates counts only during the time that the offset VCO is producing the IF. After acquisition, the pseudorandom switching between VCO's stops and the multiplexer selects the main VCO. The IF is then measured by counter A with a gate time determined by the desired resolution.

8-218. The LO Switch signal comes in at XA13($\overline{8}$) and, after passing through TTL to ECL converters, drives U12A and U12B to switch the IF between counter A and counter B. When LO Switch is high, counter A is selected and LO Switch is low, counter B is selected.

8-219. The 8-decade channel A counter consists of decade counter U17 (the least significant decade), decade counter U13, and 6-decade counter U1. The 8-decade channel B counter consists of decade counter U18 (least significant decade), decade counter U14, and 6-decade counter U2.

8-220. To output the contents of the 8 decades to the microprocessor, each counter has outputs which pass through multiplexers. The counter A multiplexer consists of 4-line-to-1-line data selectors U5A, U5B, U9A, U9B. The counter B multiplexer consists of U6A, U6B, U10A, and U10B. If the LCTRRD (low counter read) signal goes low and if A5 = logic 1, then the A counter multiplexer is enabled (otherwise the three-state outputs are in the high Z state) and the contents of

the A counters are output on the data lines to the microprocessor. With LCTRRD low and the A5 = logic Ø, then B counter multiplexer is enabled and its contents are output on the data lines.

8-221. After passing through main gate U11, the signal is switched to either the A counter or the B counter by gates associated with ÷2 flip-flop U12A and U12B. If the A counter is selected, the IF signal is divided by 2 by U12B and divided by 2 again by U16B. The output of U16B(14) passes through ECL to TTL level converter U15. The outputs of these first two binaries are connected to the "Ø" data inputs of the multiplexer and are read first by the microprocessor.

8-222. For example, the output of the first binary in the A counter chain U12B(14) is connected, via an ECL to TTL converter, to U9A(6). Consequently, the state of the A counter's two least significant binaries is read by the microprocessor by sending LCTRRD low, A5 = logic 1, and A3 = A4 = logic 1 (the inverter U7 causes the "Ø" data inputs of the multiplexer to be connected to the multiplexer outputs). The outputs of the first decade counter following the binaries are read in a similar fashion. These outputs are connected to the "1" data input of the multiplexers. For example, to read the first decade of the A counter, LCTRRD goes low with A5 = logic 1, A3 is set to logic Ø and A4 is set to logic 1 (because of the inversion, the "1" data iputs to the multiplexers are selected). To read the last six decades, the "3" data inputs of the multiplexers are selected by setting A3 = A4 = logic Ø. The AØ, A1, and A2 address lines used to address the decades in U2 (if A5 = logic Ø) or U1 (A5 = logic 1). To address the least significant decade in U1, for example, the logic state of the address lines would be:

LCTRRD	A5	A4	A3	A2	A1	AØ
Ø	1	Ø	Ø	1	1	1

8-223. The Direct A input at XA13($\overline{7}$) is the output of the first high-speed binary located on the A3 Direct Count Amplifier. The Direct B input is the output of the second high-speed binary on A3 and it drives the A counter when making direct count measurments. The state of the first and second binaries on A3 are connected to the "Ø" data inputs of U5A and U5B on A13 and are read first for direct count measurement. The state of the ÷4 output from A3, which causes the output of A13U11C(4), passes through an ECL to TTL converter formed by Q2 and Q3 before going to U5B(10). Therefore, in direct count, the signal is divided by 4 on A3 and then divided by 4 in U12A, U16A on A17, before passing to the decade counters U17, U13, and U1.

8-224. After counting, the decades are reset by writing to A13 counter board with DØ = logic Ø. This causes U4(5) to go low to reset U18, U17, and U13. U4(6) goes high to reset U2 and U1 as well as U12 and U16.

8-225. A14 MICROPROCESSOR ASSEMBLY

8-226. The A14 Microprocessor (MPU) assembly shown in *Figure 8-37* contains in ROM the operating algorithm of the instrument. This assembly controls the measurement cycle, performs numerical computations for frequency measurements, and interfaces with many of the other assemblies.

8-227. The A14 MPU assembly uses the Motorola 6800 MPU (U21). The application in the HP 5342A is described in the following paragraphs.

8-228. Microprocessor Operation

8-229. The HP 5342A uses U21 for control and computation purposes. An expanded block diagram of U21 is shown in *Figure 8-14*. The 16-bit address bus allows the MPU to address up to 64K memory locations. The data bus is 8 bits wide and is bidirectional. Data on the bus is read into the internal MPU registers when the Read/Write control line is low. All operations are synchronized to a two-phase nonoverlapping 1 MHz clock, ϕ1 and ϕ2. Each instruction requires at least two-clock cyles for execution. The HP 5342A utilizes the following additional 6800 control lines:

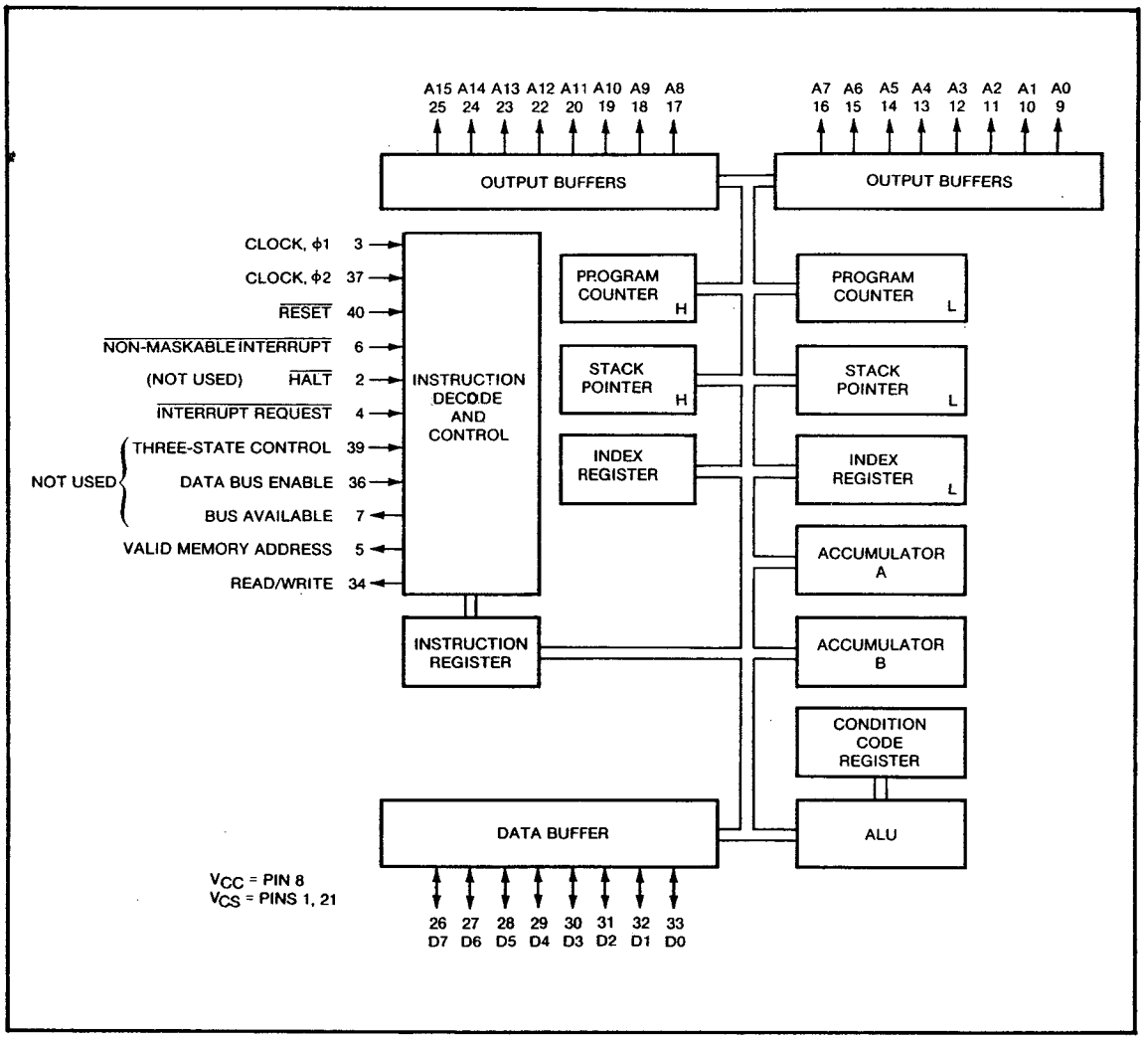

Figure 8-14. A14U21 Expanded Block Diagram

a. $\overline{\text{RESET}}$ — This input is used to reset and start the MPU from a power-down condition, resulting from a power failure or an initial start-up of the processor. If a positive edge is detected on the input, this will signal the MPU to begin the reset sequence. This will start execution of a routine to initialize the processor from its reset condition. All the higher order address lines will be forced high. For the restart, the last two (FFFE, FFFF) locations in memory will be used to load the program counter. During the restart routine, the interrupt mask bit is set and must be reset before the MPU can be interrupted by $\overline{\text{IRQ}}$.

b. $\overline{\text{NONMASKABLE INTERRUPT}}$ ($\overline{\text{NMI}}$) — A low-going edge on this input request that a nonmask-interrupt sequence be generated within the processor. As with the $\overline{\text{INTERRUPT REQUEST}}$ signal, the processor will complete the current instruction that is being executed before it recognizes the $\overline{\text{NMI}}$ signal. The interrupt mask-bit in the Condition Code Register has no effect on $\overline{\text{NMI}}$. The Index Register, Program Counter, Accumulators, and Condition Code Register are stored away on the stack. At the end of the cycle, a 16-bit address will be loaded that points to a vectoring address which is located in memory locations FFFC and FFFD. An address loaded at these locations causes the MPU to branch to a nonmaskable interrupt routine in memory. $\overline{\text{NMI}}$ has a high impedance pullup internal resistor, however, a 3 KΩ external resistor to V_{CC} should be used for wire-OR and optimum control in interrupts. Inputs IRQ and $\overline{\text{NMI}}$ are hardware interrupt lines that are sampled during $\phi 2$ and will start the interrupt routine on $\phi 1$ following the completion of an instruction.

c. $\overline{\text{INTERRUPT REQUEST}}$ ($\overline{\text{IRQ}}$) — This level sensitive input requests that an interrupt sequence be generated within the machine. The processor will wait until it completes the current instruction that is being executed before it recognizes the request. At that time, if the interrupt mask bit in the Condition Code Register is not set, the machine will begin an interrupt sequence. The Index Register, Program Counter, Accumulators, and Condition Code Register are stored away on the stack. Next the MPU will respond to the interrupt request by setting the interrupt mask bit high so that no further interrupts may occur. At the end of the cycle, a 16-bit address will be loaded that points to a vectoring address which is located in memory locations FFF8 and FFF9. An address loaded at these locations causes the MPU to branch to an interrupt routine in memory. The $\overline{\text{HALT}}$ line must be in the high state for interrupts to be recognized. The $\overline{\text{IRQ}}$ has a high impedance internal pullup; however, a 3 KΩ external resistor to V_{CC} should be used for wire-OR and optimum control of interrupts.

d. Valid Memory Address (VMA) — This output indicates to peripheral devices that there is a valid address on the address bus. In normal operation, this signal should be utilized for enabling peripheral interfaces. This signal is not three-state. One standard TTL load and 30 pF may be directly driven by this active high signal.

e. Read/Write (R/W) — This TTL compatible output signals the peripherals and memory devices whether the MPU is in a Read (high) or Write (low) state. The normal standby state of this signal is Read (high). Three-state Control going high will turn Read/Write to the off (high impedance) state. Also, when the processor is halted, it will be in the off state. The output is capable of driving one standard TTL load and 130 pF.

8-230. The MPU (U21) is driven by a two-phase clock, $\phi 1$ at U21(3) and $\phi 2$ at U21(37). As shown in *Figure 8-37*, the two-phase clock is derived from the 1 MHz input at XA14B(8, $\overline{8}$). Switch S2 allows a 1 MHz clock to be used (normal operation) or a 500 kHz clock (debugging purposes). The switch must be set as shown for 1 MHz operation or 500 kHz operation.

8-231. The 1 MHz signal now passes through the delay generator formed by U22A, U22B, and U24F which delays $\phi 2$ with respect to $\phi 1$. The $\phi 1$ clock driver consists of U23A and B and the $\phi 2$ clock driver consists of U23C and D.

8-232. The address outputs of U21 pass through three-state inverting line drivers U16, U18, and U8. Since the Bus Available control line, U21(7), is low, the three-state drivers are always enabled. (In direct memory access (DMA) applications, which are not implemented in the HP 5342A, Bus Available goes high indicating that the MPU has stopped and that the address bus is available.) The address lines drive RAM U12 and ROM U1, U4, and U7. The U12 RAM occupies 128 memory locations from ØØ8Ø to ØØFF. To see how this is implemented, consider what happens when the address ØØ8Ø is output by the MPU:

A15	A14	A13	A12	A11	A10	A9	A8	A7	A6	A5	A4	A3	A2	A1	AØ
Ø	Ø	Ø	Ø	Ø	Ø	Ø	Ø	1	Ø	Ø	Ø	Ø	Ø	Ø	Ø
Ø				Ø				8				Ø			

After going through the inverting line drivers U16, U18, and U8, the address lines become:

A15	A14	A13	A12	A11	A10	A9	A8	A7	A6	A5	A4	A3	A2	A1	AØ
1	1	1	1	1	1	1	1	Ø	1	1	1	1	1	1	1
F				F				7				F			

8-233. To address a location in RAM, all the enable inputs must be true. Consequently, U12(11) must be low, U12(12) must be low, U12(14) must be low, U12(10) must be high, U12(13) must be high, and U12(15) must be low. The seven address inputs then select one of 128 locations in the RAM. For the case of ØØ8Ø sent out by the MPU, it is seen that U12(11) goes low when the inputs to U22D are both high (VMA high indicating that the address data on the address bus has settled and is valid data and $\phi 2$ high); U12(12) is low since the inputs to U9B (inverted A15, A14, A13) are all high; U12(14) is low since the inputs to U9C (inverted A12, A11, A10) are all high; U12(10) is high since the inputs to U5D are both high (inverted A9 and LFRERUN); U12(13) is high since inverted A8 is high; U12(15) is low since inverted A7 is low. Thus, due to the inversion, ØØ8Ø on the address bus from the MPU accesses location ØØFF in RAM. In a similar fashion, memory assignments are made to ROM U1 (78ØØ to 7FFF), ROM U4 (7ØØØ to 77FF), and ROM U7 (68ØØ to 6FFF).

8-234. The address lines are decoded by device decoding circuitry on A14. In some instances, further decoding occurs at a particular device (for example, on the A13 Counter assembly). The MPU treats an external device just like a memory location. To pass information between the registers of the MPU and the registers of an external device (such as the count registers on the A13 Counter assembly), the program writes or reads data from (or to) the location associated with the device. Address decoding circuitry decodes the address output from the MPU and generates a strobe which enables the register on the device. For example, to read data from the A1 keyboard, LKBRD goes low which enables the three-state bus driver A1U12 to drive the data bus and send keyboard information back to the MPU. The address location assigned to reading the keyboard is ØØ1Ø. When ØØ1Ø is output by the MPU, address decoding causes U20(7) to go low. Since only one device can drive the data bus at a time, all other device code outputs are high (so that the device buffers on these devices are in the high Z state). To see how ØØ1Ø causes U20(7) to go low, consider that the inverted address lines at the output of inverter buffers U16, U18, U8 will be:

A15	A14	A13	A12	A11	A10	A9	A8	A7	A6	A5	A4	A3	A2	A1	AØ
1	1	1	1	1	1	1	1	1	1	1	Ø	1	1	1	1

Since AØ, A1, and A2 are all high, these inputs to U20 will cause 7 to be decoded and U20(7) to go low provided that the control inputs U20(4) and U20(5) are both low. U20(5) goes low when the inputs to U22D are both high (VMA high and $\phi 2$ high). U20(4) is low when U17 decodes the address output by the MPU and the address in the range of ØØ1Ø to ØØ17. U17(11) is low when U17(14) is high and U17(13) is low, provided that the control input U17(15) is low. Since inverted A3 is high and inverted A4 is low, the U17(11) output will be low provided that U17(15) is low. U17(15) is low provided that U13A(2) and U13A(1) are both low. U13A(1) is low since inverted A5 is high. Inverted A15, A14, A13, A12, A11, A10 all high is decoded by U9A, U9B, and U13C. A9 is also high. Thus U14 is enabled. Since inverted A8, A7, A6 are all high, the decoded 7 output U14(7) goes low. In summary, U14(7) goes low only when inverted A15, A14, A13, A12, A11, A10, A9, A8, A7, A6 are all high. Inverted A5 high, A4 low, A3 high is decoded by U17B. Inverted A2, A1, and AØ all high is decoded by U20.

8-235. The eight bidirectional data bus lines coming out of U21 pass through an eight-section switch, S1, which allows each line in the data bus to be opened for troubleshooting purposes. Resistor pack R6, with individual pull-up resistors connected to the data lines, together with two lines connected to ground via CR2 and CR3 (these lines connected to ground only when LFRERUN is ground by switch S2), cause a CLB (clear accumulator B) instruction to be presented to the MPU when the switch S1 is opened and LFRERUN is grounded. This causes the MPU to continuously increment the addresses on the address bus from the least significant address (ØØØØ) to the most significant address (FFFF) for diagnostic purposes when using the 5004A Signature

Analyzer. LFRERUN grounded forces the Clear B instruction and also causes U15E(10) to go low which disables RAM U12. With S1 opened, feedback is broken between the ROM outputs and the MPU inputs which is a necessary condition for taking signatures with the HP 5004A Signature Analyzer. If LXROM (Low External ROM) is grounded, the ROM's U1, U4,and U7 will be disabled by U6A(1) going low and the address lines can now be used to drive external memory residing in the upper 32K of the memory map.

8-236. The power up reset circuitry formed by Schmitt trigger U11A, U11B, and inverter U15F provides a low reset pulse to the MPU reset input U21(40) and a LDVRST output to the A2 Display Driver to blank the display during power-up. The length of the low reset is determined by the time constant of resistors R5, R3, and capacitor C5 (400 milliseconds).

8-237. The LAMP EN input at XA14B($\overline{2}$) is used to indicate the presence or absence of the A16 Amplitude assembly (Option 002) since program execution will be different if this option is installed. If Option 002 is present in the HP 5342A, LAMP EN will be grounded. The LAMP EN line is connected to three-state line driver U8 and the output connects to the D1 line of the data bus. To check if Option 002 is present, the MPU sends out address 0018 which causes the output of U11C(8) to go low and strobe a high (if LAMP EN is low) onto D1 of the data bus.

8-238. The eight data lines, after passing through switch S1, pass through bidirectional inverting line drivers U3, U2. When data is being written out to the external devices (or to RAM), U21(34) goes low which causes U12(16) to go low and U3(15), U2(15) to go high (and U3(1), U2(1) low) thereby enabling the drivers which write to external devices. When data is being read from external devices (or RAM), U21(34) goes high which causes U12(6) to go high and U3(1), U2(1) to go low (and U3(15), U2(15) high). This enables the drivers in U2, U3, which read data from external devices.

8-239. The memory assignments are summarized in *Figure 8-15*. Ordinarily, when power on, the MPU executes the instructions in FFFF and FFFE. Since the A14 MPU assembly has the A15 address line configured as "don't care", the MPU in the HP 5342A executes 7FFF and 7FFE after the power on reset.

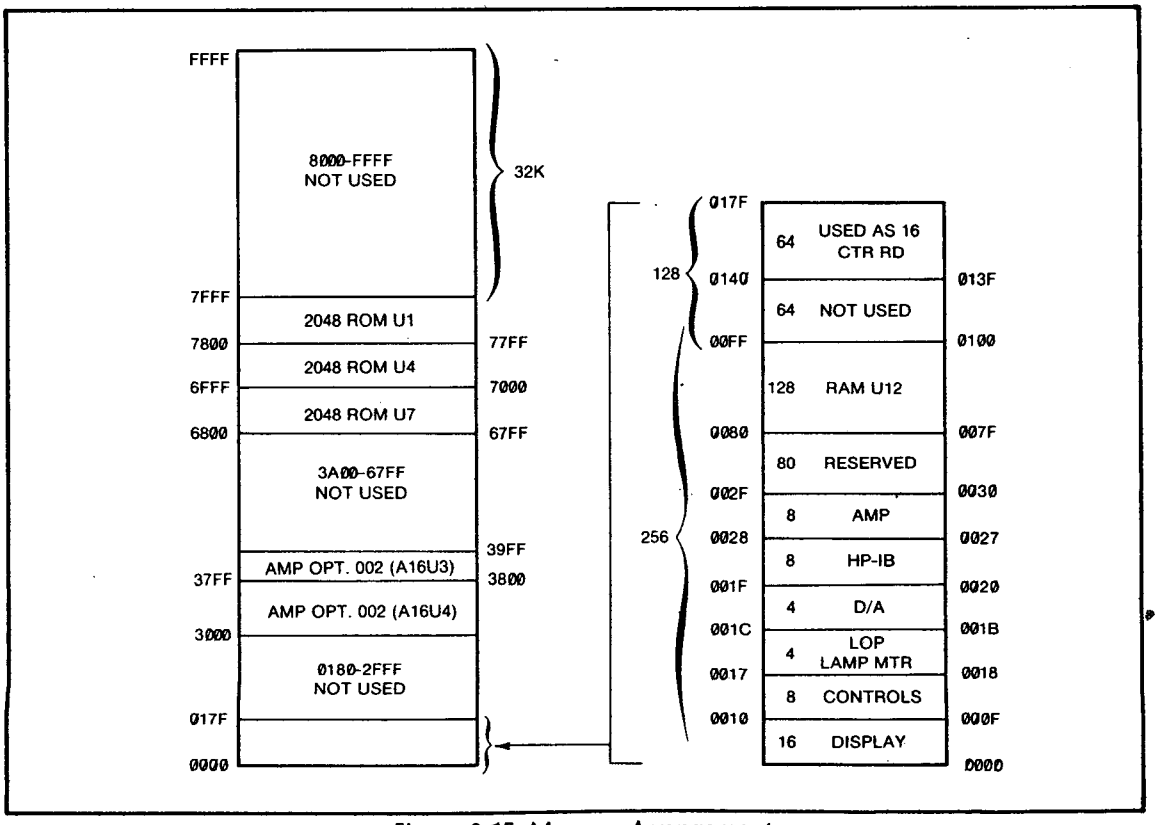

Figure 8-15. Memory Arrangement

8-240. A15 OPTION 011 HP-IB ASSEMBLY

8-241. The A15 Option 011 HP-IB assembly is described under OPTIONS in paragraph 8-346.

8-242. A16 OPTION 002 AMPLITUDE MEASUREMENTS ASSEMBLY AND A16 OPTION 003 EXTENDED DYNAMIC RANGE ASSEMBLY

8-243. The A16 Option 002 Amplitude Measurements assembly is described under OPTIONS in paragraph 8-296. The A16 Option 003 Extended Dynamic Range assembly is described in paragraph 8-331.

NOTE

The A16 slot is used for either the Option 002 or 003 pc assembly. Only one of these options can be installed in an instrument.

8-244. A17 TIMING GENERATOR ASSEMBLY

8-245. The A17 Timing Generator shown in *Figure 8-41* has the following functions: during acquisition, it generates the pseudorandom sequence used to switch the A5 Multiplexer and the A13 counters for N determination; after acquisition, it generates gate times for the measurement of the IF on A13; between measurements, its sample rate circuitry determines when to begin a new measurement.

8-246. The DØ through D5 data lines from the microprocessor data bus transmit data from the microprocessor to the hex D-type register U19 when the LTIM WRT signal (decoded on A14) goes low. LTIM WRT returning high clocks the data into the register. The data lines also transmit data back to the microprocessor from hex three-state driver U18 which drives the data bus when LTIMRD (decoded on A14) goes low.

8-247. Pseudorandom Sequence Generation

8-248. During acquisition, after a countable signal has been detected and the sweep stopped, the N number must be computed. By measuring the IF_1 frequency which occurs when the Nth harmonic of the main VCO mixes with the unknown frequency and then measuring the IF_2 that occurs when the Nth harmonic of the offset VCO mixes with the unknown, the harmonic number N can be determined. N equals (IF_1—IF_2)/500 kHz where 500 kHz is the precise frequency difference between the main VCO and the offset VCO. To speed the process of determining N, two counters (on A13) are used, counter A and counter B. To prevent coherence between FM on the unknown signal and the switching rate between counters from causing an incorrect computation of N, the switching between counter A and B (which is synchronous with the switching in A5 between the main VCO and the offset VCO) is done in a pseudorandom fashion. Two different sequence lengths are possible: 1) the normal or short pseudorandom sequence (prs) which lasts for a total time of 360.4 milliseconds (counter A and counter B are open for 163.83 ms each — there's ~32.8 ms of "dead" time). This short prs gives a worst case FM tolerance of 20 MHz peak-to-peak; or 2) the long prs, which is selected by a rear panel switch, lasts for a total time of 2.096 seconds (counter A and counter B are open for 524 ms each in addition to 1.048 seconds of "dead" time). This long prs gives FM tolerance of 50 MHz peak-to-peak.

8-249. To begin the pseudorandom sequence, the microprocessor writes to A17 and sets U19(15) high (prs enable), U19(12) low (gate time disable), U19(7) high (for 1 MHz prs clock), and U19(5) high for the long prs or sets U19(2) high for the normal prs. For the short prs, a 100 kHz prs clock is used and U19(7) is low. Decade divider U11 divides down the 1 MHz input to 100 kHz which appears at U10(8). For the long prs, a 1 MHz prs clock is used and U19(7) is high. Since U11(1, 3) are both high, the counter is preset to 9 so that U11(9, 8) are both high which enables U10. Thus the 1 MHz input appears at U10(8) and becomes the prs clock.

8-250. The prs generator consists of shift registers U7, U4, U5, 4-bit counters U2, U1, and logic gates U6, U3. When U19(15) (prs enable) goes high, the output of U14(11) goes high which releases the reset signal from all the components of the prs generator and starts the sequence. To generate the sequence, data is shifted through the shift register formed by U5, U4, and U7. Feedback taps exclusively "OR" two of the shift register outputs to generate the next input. This feedback generates the prs. For the short prs, U3B(4) is high and U6A is used to perform the exclusive "OR" function (the output of U7(6) is not used for the short prs). For the long prs, U3A(1) is high and U6B performs the exclusive "OR". The data is then fed back to the input of the shift register at U5(1, 2) via inverter U3C.

8-251. The short prs is 15 bits long and stops after 14 consecutive highs in the sequence are detected. The long prs is 20 bits long and stops after 19 consecutive highs in the sequence are detected. The detection of the number of consecutive highs in the sequence is performed by presettable counters U2 and U1. For the short prs, "1" is preset into U2 (least significant counter) and "15" is preset into U1 (most significant counter) by a low level on U2(9) and U1(9). When a high appears in the sequence, the U2 counter is incremented by the prs clock at U2(2). When a low appears in the sequence, U2 and U1 are reset to the initial preset conditions and counting up begins again. After 14 consecutive highs in the prs, U2 has counted to "15" and the carry output U2(15) has enabled U1 so that the 14th clock causes the carry output U1(15) to go high. This causes U8A(3) to go low which resets the latch formed by U14A and U14B so that U14D(11) goes low to reset U7, U4, U5, U2, and U1.

8-252. For the long prs, operation is similar: this time "12" is preset in U2 and "14" is preset into U1 so that after 19 consecutive 1's in the prs, the carry out of U1 sets U14A(3) low so that U14D(11) is low and clears the prs generator.

8-253. To allow sufficient settling time for the multiplexer on A5 after switching, 2 microseconds of dead time are added to each transition in the sequence which means that the transistions of the LIF GATE signal (which enables counter A or counter B on A13) are delayed with respect to the LO Switch signal which switches the A5 multiplexer and switches between counter A and counter B on A13 as shown below:

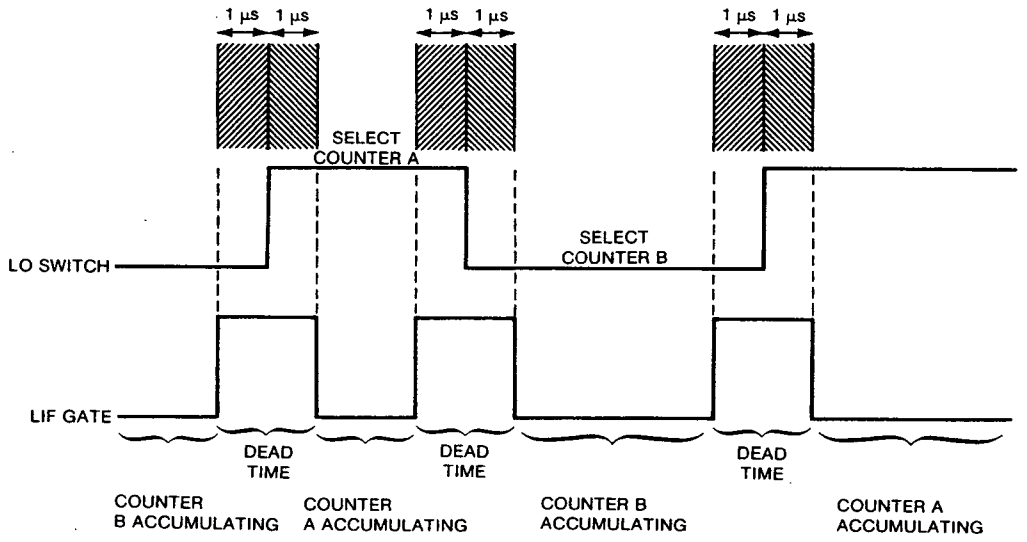

8-254. The dead time in the LIF GATE signal is generated by D flip-flops U9A, U9B, exclusive "OR" U6D, and D flip-flop U15A. The dead time is generated when U6D(11) goes high for two periods of the 1 MHz clock. With U6D(11), high, U10B is disabled and the prs clock at U10C(8) remains high. The reset input to U15A(1) is low during the prs generation so that U15A(5) is low. When the preset input U15A(4) goes low also, the output goes high for the time that the preset

signal is high (both Q and $\overline{Q}$ outputs go high when preset and clear inputs are both low). When U6D(11) goes high to disable the prs clock for 1 μs, U15A(5) goes low for 2 μs. The low is presented to U17A(7) and on the next clock at U17A(6), the low at U17A(7) is clocked into the output so that LIF GATE goes low to enable counting on A13.

8-255. The following timing diagram for the long prs generation (prs clock = 1 MHz) will help clarify the operation:

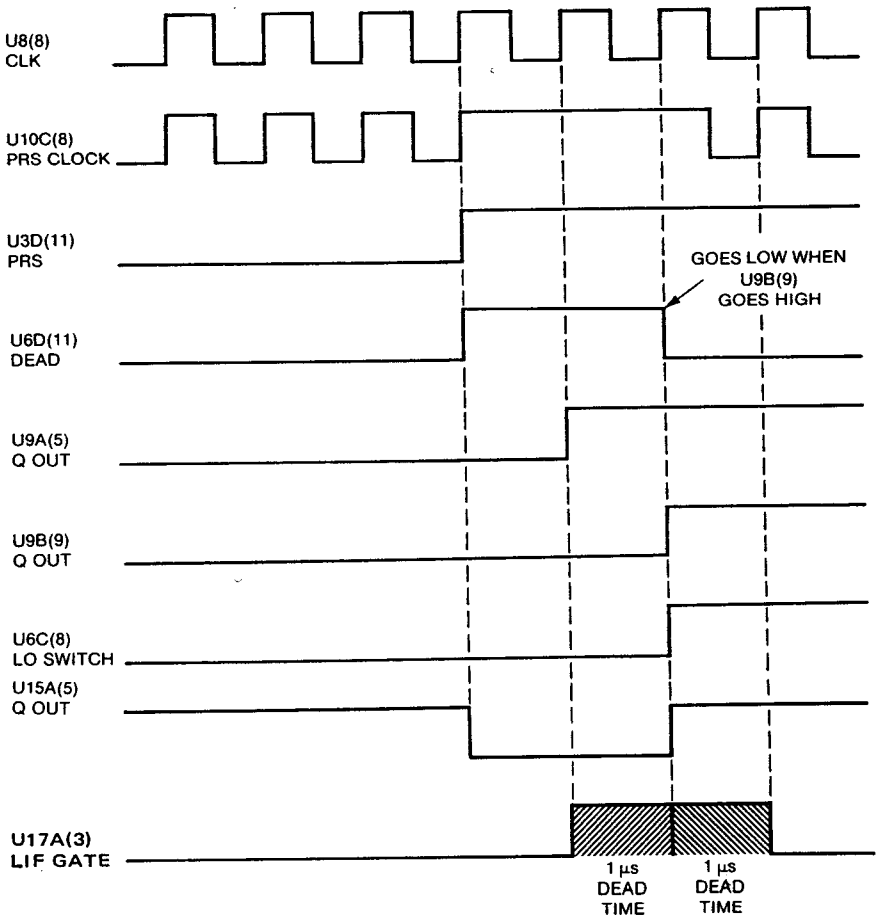

8-256. When the prs is over, U14D(11) goes low. When the A17 board is read by the microprocessor, LTIM RD goes low and three-state drivers U18 are enabled. If the prs is over, U18(5) is low and the program detects this, causing the next program segment to be executed.

8-257. Gate Time Generation

8-258. Gate times for measuring the IF signal after acquisition and N determination are generated by time base generator U16, D flip-flops U15 and U17. To generate gate times from 10 μs to 1-second, the microprocessor writes to A17 to set U19(21) (gate time enable) high, U19(10) (sets LO SWITCH to high which selects counter A and the main loop VCO) high, U19(15) low (prs disabled), and a 3-bit resolution code on U19(7, 5, 2) which selects the division factor of the decade dividers in U16.

8-259. For gate time generation, divider U11 divides the 1 MHz clock input to 100 kHz. Since U14(8) is high, the 100 kHz passes through gate U12D to U16(3). The 100 kHz signal at U16(3) will be divided by a factor of 10^0 to 10^5, depending upon the resolution code at U16(14, 13, 12) and will appear at the output U16(1):

U16(14)	U16(13)	U16(12)	U16(1)
1	Ø	1	1 Hz
Ø	Ø	1	10 Hz
Ø	1	1	100 Hz
Ø	1	Ø	1 kHz
1	Ø	Ø	10 kHz
Ø	Ø	Ø	100 kHz

8-260. Since U15B(8) is high, the low to high transition at U15(3) clocks a high into U15A(5). U15A(6) low then presets U15B(8) low so that after one period of the divided U16 output, a low is clocked into U15A(5). After passing through a TTL to ECL level shifter, the gate signal is clocked into the high-speed ECL D flip-flop U17A and U17B. U17A and U17B act as the main gate flip-flop for the counter. U17A is used for measurements in the 0.5—18 GHz range and U17B for direct measurements below 500 MHz.

8-261. U15A(6) goes low when the gate time has expired and this is sent to three-state driver U18A(2). When LTIM RD goes low, U18A(3) low indicates to the microprocessor that the gate time is over and that the program may advance to the next operation.

8-262. Sample Rate Generation

8-263. The sample rate rundown is initiated by writing a low into U19(2) followed by writing a high into U19(2). During the time that U19(2) is low, C16 is charged toward +5 volts through the saturated transistor Q2. The voltage at the base of Q1 is sufficient to turn on Q1, which generates a TTL high at U18C(6). With U19(2) high, the charge on C16 is discharged through R16 and the 1 MΩ SAMPLE RATE pot R9 on A2 until the voltage at the base of Q1 turns off the transistor, thus producing a TTL low at U18C(6). The microprocessor reads this data and upon detecting the low, advances to the beginning of the measurement algorithm. For infinite sample rate the SAMPLE RATE pot is adjusted to 1 MΩ position so that the leakage through R16 and the SAMPLE RATE pot is less than the charging current flowing through R19.

8-264. U18E, U18F, and U20 are not currently used but are reserved for future use.

8-265. The LFM signal at XA17($\overline{12}$) will be low if the rear panel FM switch is on. This will cause bit D3 to be low when the MPU reads the timing generator and tells the program to set the FM light on the front panel as well as select the long prs.

8-266. A18 TIME BASE BUFFER ASSEMBLY

8-267. The A18 Time Base Buffer assembly shown in *Figure 8-42*, provides logic to select a 10 MHz signal from either the internal 10 MHz standard (A24) or from a 10 MHz external standard applied to the 5342A rear panel. A rear panel switch generates an LEXT signal which, when TTL low, disables gate U5C (and hence the internal 10 MHz) and enables gate U5A which allows the external standard to pass through gate U5B.

8-268. The 10 MHz output of U5B is divided by 10 in U3 to provide a 1 MHz output to A12 IF Detector and to the prs generator on A17 Timing Generator. Dividers U2 and U1 divide-by-20 to provide a 500 kHz output to the phase detector on A7 Mixer/Search Control assembly and to the divide-by-10 circuit on A10 Divide-by-N assembly.

8-269. A19, A20, A21 POWER SUPPLY

8-270. The power supply used in the 5342A is a high efficiency switching regulator which is made up of the A19 Primary Power Assembly, the A20 Secondary Power Assembly, and the A21 Switch Drive Assembly. The ac line voltage is directly rectified on A19. Consequently, A19 is isolated from the rest of the instrument and care must be exercised when voltage measurements are made on A19. A19 measurements should be made by supplying power to the 5342A via an isolation transformer.

8-271. SIMPLIFIED BLOCK DIAGRAM. Figure 8-16 is a simplified block diagram of the 5342A power supply. As shown in the diagram, the supply consists of six major elements: an input rectifier-filter, a pair of push-pull switching transistors (A19Q1, Q2), an RF transformer (A20T1), output rectifiers and associated linear voltage regulators, a pulse width control feedback network, and current limiting circuitry.

8-272. VOLTAGE REGULATION LOOP. Regulation is accomplished primarily by switching transistors Q1 and Q2 under control of a feedback network consisting of the A21U4 20 kHz oscillator/pulse width modulator, and the switch drive transformers on A19. The schematic diagram is shown in *Figure 8-43.* If the 5V (D) output (digital supply) voltage attempts to decrease, the +5V sense signal drops which causes an error signal (difference between +5V sense and +5V reference set by A21R17) to drive a pulse width modulator (part of U4) and increase the pulse width of the 20 kHz outputs of A21U4. Conversely, for an increase in the voltage of +5V (D), the pulse width of the A21U4 outputs decrease. The net result of controlling the pulse width of the 20 kHz output is to control the duty cycle of the output waveforms of Q1, Q2, and hence the duty cycle of the rectangular waveform delivered to the LC filter in the +5V (D) output. The LC filter averages this rectangular waveform to produce a dc output level which is proportional to the duty cycle of the input waveform.

8-273. The feedback provided by the +5V (D) sense signal establishes a controlled input to the primary of A20T1. Other taps on the secondary of A20T1 are rectified, filtered, and delivered to individual linear voltage regulators to provide +5V (A) output (analog supply), -5.2V, +15V, -15V, and +12V.

8-274. The oven transformer output is rectified and filtered to provide power to the control circuits U3, U4 on A21 and oven power when the Option 001 oven oscillator is installed. These oven transformer voltages are available whenever the 5342A is plugged into the line voltage, regardless of the position of front panel power switch.

8-275. CURRENT LIMITING. Total current load is sensed by resistor A19R5 and a signal is sent, via optical isolator CR2, to the A21U3 Timer which acts as an overcurrent shutdown circuit. When excessive current is drawn, the output of U3 turns off the 20 kHz oscillator on U4 for approximately 2 seconds.

8-276. For output voltages other than the +5V (D) output, excessive current may or may not cause A21U4 to turn off since the current limiting circuitry built into the individual linear regulaor may shutdown the output before the U3 Timer has time to shutdown the 20 kHz oscillator in U4.

8-277. When the hold-off output of U3 is TTL high, the 20 kHz oscillator on U4 is disabled. This high level causes a red LED to light which indicates overcurrent shutdown. When this occurs, the green LED on A20 turns off, indicating the absence of +5V (D).

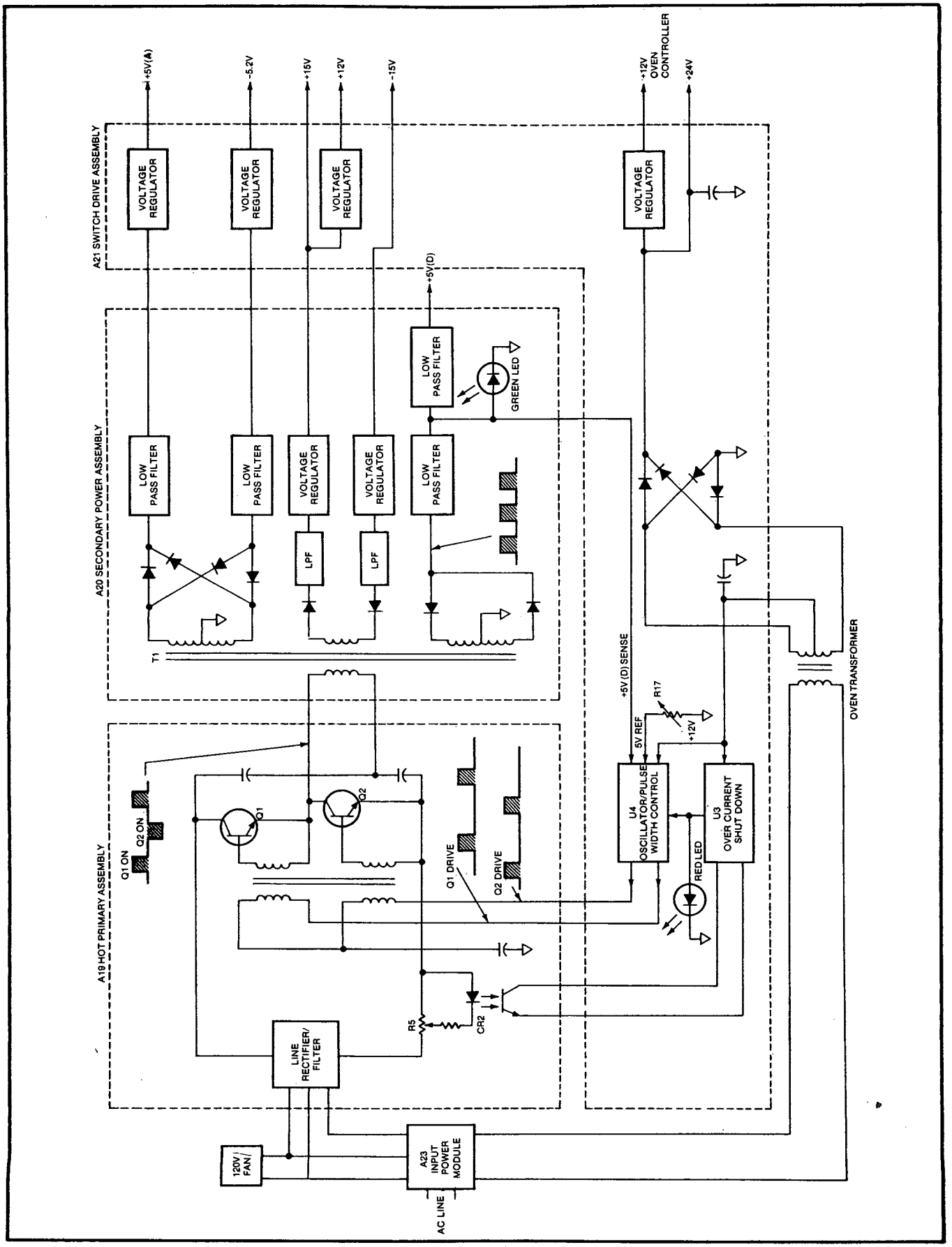

Figure 8-16. A19, A20, and A21 Power Supply Block Diagram

8-278. A22 MOTHERBOARD

8-279. The A22 Motherboard contains the XA (Assembly No.) connectors for the plug-in printed circuit assemblies (cards) and provides interconnections between the cards. The motherboard also contains terminals and connectors for interconnection of assemblies to the front and rear panels.

8-280. A23 POWER MODULE

8-281. The A23 Power Module is mounted on the rear panel of the 5342A and contains a connector for a power cable, a fuse and a pc card. The pc card can be inserted in any one of four positions to select 100-, 120-, 200-, or 240-volt ac operation. The schematic diagram of the power module is shown in *Figure 8-43* and a detailed description is contained in paragraph 2-6.

8-282. A24 OSCILLATOR ASSEMBLY

8-283. The A24 oscillator board contains a 10 MHz crystal oscillator that supplies the internal signal to the A18 Time Base Buffer Assembly. An Option 001 A24 board contains an oven-controlled crystal oscillator (10544A) that results in higher accuracy and longer time periods between calibration. Refer to the specification listed in *Table 1-1*. The schematic diagrams for both oscillators is shown in *Figure 8-44*.

8-284. A25 PREAMPLIFIER

8-285. The A25 Preamplifier Assembly shown in *Figure 8-45*, combines the two outputs from the sampling diodes in the U1 Sampler and provides approximately 42 dB gain for the sampler output. This gain remains approximately flat out to 125 MHz and rolls off by 8 to 10 dB at 175 MHz. This roll-off for frequencies above 125 MHz prevents interference between the difference frequency produced by the desired Nth harmonic of the VCO mixing with the unknown and the difference frequency produced by the (N±1) harmonic of the VCO mixing with the unknown. Refer to paragraph 8-105 for a detailed description of sensitivity.

8-286. A level detecting diode (CR1) detects RF level and is used to indicate overload to the microprocessor. The detected RF output is also used for controlling current sources on A25 which are used to control pin diode attenuators in the Amplitude Option (002) and Extended Dynamic Range Option (003).

8-287. The two sampler outputs are combined in C5 and C9 at the input and are passed to the first stage of amplification. High frequency transistor Q22 and its associated circuitry provide approximately 10 dB gain. Resistors R6 and R7 provide negative feedback to stabilize Q2's operating point. Emitter resistors R14 and R13 are low inductance strip resistors and also provide negative feedback for gain stabilization. The amplified output of Q2 is coupled through dc blocking capacitor C7 to a similar stage of amplification built around Q1. The output of this second stage is approximately 24 dB greater than the input from the sampler and is coupled through C8 to a 3 dB pad, consisting of R9, R17, and R16, which provides a well defined driving impedance for all subsequent filter and amplifier stages. The signal then passes through an elliptic function filter consisting of L3, L4, L6, C10, L5, L7, and C11. This filter reduces the 500 MHz bandwidth of the first two stages to something less than 175 MHz. Variable capacitor C11 is adjusted to provide the required roll-off at 175 MHz. Differential pair U1 provides approximately 14 dB gain.

8-288. The output of U1 passes through a 200 MHz low-pass filter whose major purpose is to filter out the fundamental sampling frequencies of the main oscillator and offset oscillator which appear in the output of the sampler. Differential pair U2 provides another 14 dB gain and the output is coupled through capacitor C26 to the A11 IF Limiter Assembly.

8-289. Diode CR1 rectifies the output of the 175 MHz elliptic filter and provides an output which is proportional to the amplitude of the RF input signal. This level is fed to voltage comparator U3, which, due to the positive feedback provided by R33, has hysteresis and operates like a Schmitt trigger. When the dc level from the detecting diode CR1 rises above the level at U3(2), set by "OFST" potentiometer R31, the output of U3 goes TTL high which causes U4(3) to go low. This output, called LOVL, is sent to the A12 IF Detector where it is buffered and read by the microprocessor. If LOVL is low, then the microprocessor sends dashes to the counter display. Potentiometer R31 is adjusted so that LOVL goes low when the RF into the counter exceeds about +5 dBm. When U4A(3) goes low due to the RF input level exceeding +5 dBm, the RS latch formed by U4B and U4D is set so that U4B(6) is TTL high. This causes U4C(8) to go low which turns off transistor Q4. With Q4 turned off, the voltage at the base of Q5 goes to +15 volts and Q5 is turned off. The current source formed by Q6, R41, R39, CR5, and R40 is always on. By turning off the current source formed by Q5 and R36, the current flowing through the pin diode attenuator (Options 002, 003 only) is decreased and the diode resistance increases by approximately 15 dB. This allows signals up to approximately +20 dBm to be measured if Option 002 or 003 is present. For signals less than +5 dBm U4C(8) is high, Q4 is on and the Q5 current source is on. Since more current flows through the pin diode, its resistance is less (by 15 dB). A LPWR ST signal from A11 resets the RS latch U4B, D when the input power level drops below about -15 dBm.

8-290. A26 SAMPLER DRIVER ASSEMBLY

8-291. The A26 Sampler Driver shown in *Figure 8-46* converts the LO FREQ sine wave signal into a negative spike waveform at the same frequency as the LO FREQ signal input. The spike goes from +0.7V dc to about -8V dc with a slew rate of approximately 8 picoseconds/volt. This fast transition is used to turn on the sampling diodes in the sampler for a few picoseconds and is necessary in order to produce useable harmonics of the VCO frequency up beyond 18 GHz.

8-292. The input frequency, in the range of 300 to 350 MHz, is applied to a common collector amplifier formed by one-half of transistor pair U1 (ac coupling for the LO FREQ signal is provided on the A5 RF Multiplexer). The otuput is taken off the emitter of the 1st transistor, through R5, and is applied to the common emitter formed by the other half of U1. Matching network R1, L1, C3, L3, L2, C1 is used to match the output impedance of U1 to the step recovery diode CR1.

8-293. AGC is provided by coupling part of the U1 output through CR5 to detecting diode CR2. The detected dc voltage which appears across C10 is used to cause transistor Q1 to conduct more or less current, thereby changing the gain through the first transistor in U1. The gain is changed in such a fashion as to cause the A26 output at the SMA connector A26J1 to have little change in amplitude for variations in input signal amplitude. The output is sent to U1 Sampler.

8-294. OPTIONS THEORY (OPTIONS 002, 003, 004, AND 011)

8-295. The following paragraphs contain the theory of operation for the 5342A options as follows:

a. Option 002 Amplitude Measurements

b. Option 003 Extended Dynamic Range

c. Option 004 Digital-to-Analog Conversion (DAC)

d. Option 011 Hewlett-Packard Interface Bus (HP-IB)

8-296. OPTION 002 AMPLITUDE MEASUREMENTS OVERALL THEORY

8-297. Introduction

8-298. The 5342A measures amplitude by multiplexing the counter input signal (either at the 0.5 to 18 GHz high-frequency input or 10 Hz to 500 MHz low-frequency input) between the normal counting circuits and the amplitude measuring circuits. An amplitude measurement takes approximately 100 milliseconds.

8-299. The multiplexing is performed by the U2 High Frequency Amplitude Assembly for the 0.5 to 18 GHz input or by the A27 Low Frequency Amplitude Assembly for the direct count input (when the 50Ω - 1MΩ switch is in the 50Ω position). The A16 Amplitude Assembly completes the assemblies required for amplitude measurements.

8-300. Block Diagram

8-301. *Figure 8-17* is a simplified block diagram of the amplitude measurement option. The incoming 0.5 to 18 GHz rf signal is applied to the rf detector diode inside the U2 assembly. Since the transfer function of the detector diode changes with input level and temperature, a feedback circuit using two diodes in thermal proximity is used. The feedback circuit linearizes the transfer characteristic between the rf input voltage and the dc voltage output to the analog to digital converter and compensates for the temperature drift of the detector diode.

8-302. The rf detector is driven by the input signal and the 100 kHz detector is driven by a variable amplitude 100 kHz signal generated on the A16 Amplitude Assembly. The feedback loop adjusts the amplitude of the 100 kHz signal so that the output of the 100 kHz detector is equal to the output of the RF detector. The amplitude of the 100 kHz signal is determined, log converted, corrected by calibration data stored in PROM, and is output to the display as the amplitude of the rf input signal in dBm.

8-303. The amplitude of the 100 kHz signal is determined by measuring (with an analog to digital converter) the dc control voltage which determines the amplitude of the 100 kHz signal. The dc control voltage, which is developed by the error amplifier, drives a linear modulator which varies the amplitude of the 100 kHz signal. The proportionality constant between control voltage input and the amplitude of the 100 kHz output is known and is used by the program residing in ROM to compute the level of the 100 kHz signal.

8-304. Further linearization of the diode characterization is provided by a programmable ROM which is specifically programmed to compensate for a particular U2 assembly. Thus, the PROM and U2 assembly form a matched pair unique to each instrument with option 002.

8-305. OPTION 002 DETAILED THEORY

8-306. U2 High Frequency Amplitude Assembly (5088-7035)

8-307. The U2 assembly is a thin film hybrid circuit built on a sapphire substrate and placed in a hermetically sealed package. It is not field repairable. This assembly is the microwave front end which switches the microwave input signal between the U1 Sampler for frequency measurements and the U2 detectors for amplitude measurements. It also can provide approximately 15 dB attenuation to the signal which is routed to the U1 Sampler.

8-308. The microwave signal enters at U2J1, as shown in *Figure 8-39*, and passes through dc blocking capacitor C1. PIN diodes CR1 and CR2 switch the signal either to the U1 sampler or the U2CR3 Shottky diode detector. A positive signal at the FREQ on input (approximately 2.5 volts and 30 mA when "on" and approximately +0.7 volts when "off") turns on CR1 and routes

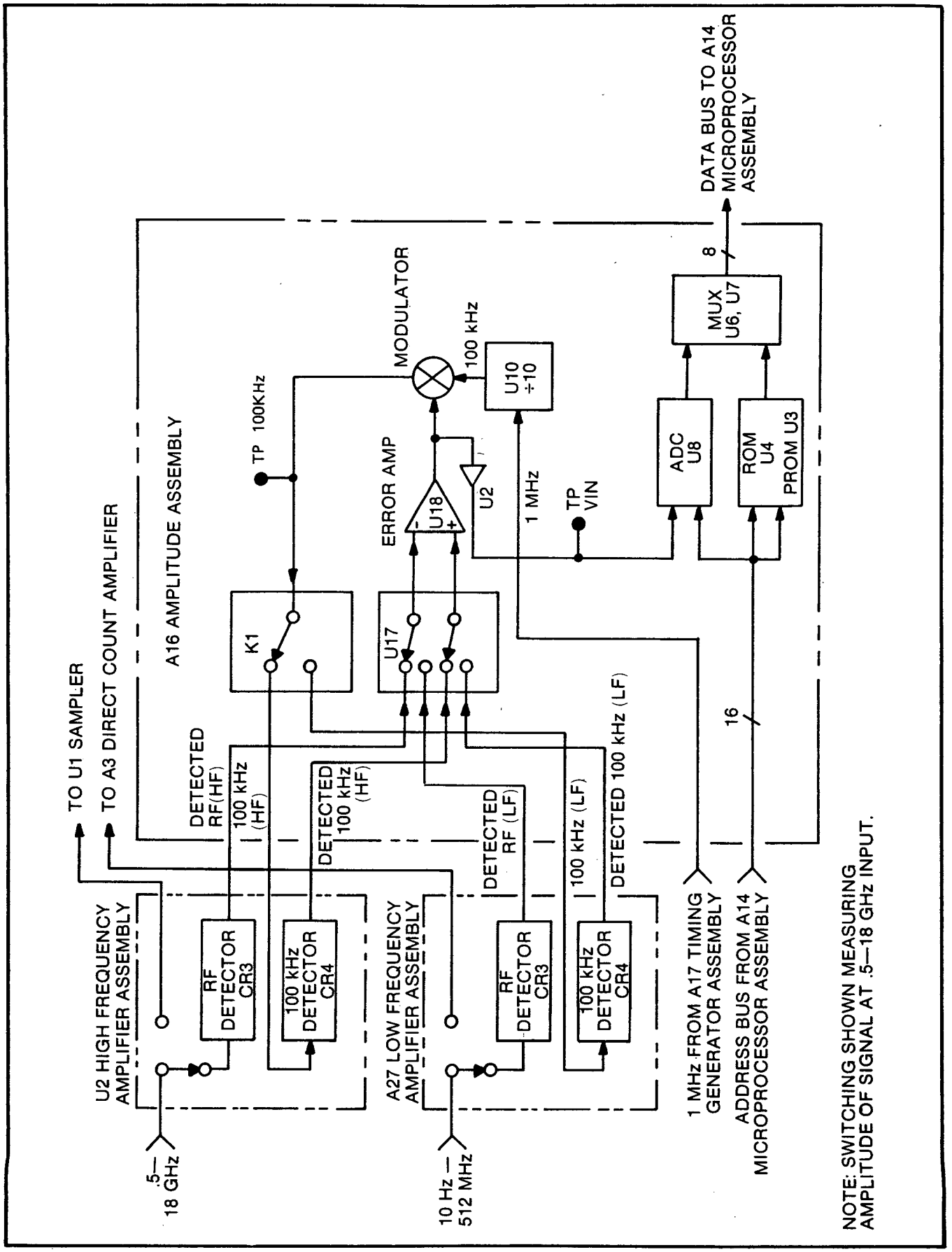

Figure 8-17. Option 002 Amplitude Measurements Block Diagram

the microwave signal to U2J2 RF OUT (CR2 is off since the AMPL ON signal is at +0.7 volts). A positive signal at the AMPL ON input (approximately +2.5 volts) turns on CR2 and routes the signal to detector CR3 (CR1 is off in this mode). The detected microwave signal, DETECTED RF (HF), exists through feedthrough capacitor C10. This dc level can vary from -500 μV (for inputs around -30 dBm) up to -2 volts (for +20 dBm inputs).

8-309. The 100 kHz (HF) input from A16 is detected by Shottky diode CR4 which is in thermal proximity to CR3. The DETECTED 100 kHz (HF) output is sent to A16 for comparison with the detected microwave signal.

8-310. A27 Low Frequency Amplitude Assembly

8-311. This assembly, shown in *Figure 8-39,* performs the same function as the U2 assembly by switching the input signal (in the range of 10-520 MHz) between the A3 Direct Count Amplifier for frequency measurements and A27CR3 Shottky diode detector for amplitude measurements. The frequency range for amplitude does not go below 10 MHz due to the storage time of the PIN diodes.

8-312. When the AMPL SEL input is +15 volts, CR1 is turned on via R4 to ground and CR2 is turned off. This routes the input signal to A3 for frequency measurements. When AMPL SEL is -15 volts, CR2 is turned on via R3 to ground and CR1 is turned off. This routes the input to Shottky diode detector CR3.

8-313. Detector CR4 detects the 100 kHz input and the detected output is sent to A16 for comparison with the detected low frequency signal. Variable resistors R9 and R10 are used to compensate for differences between matched detector diodes CR3 and CR4, and the insertion loss of the PIN diode switch.

8-314. A16 Amplitude Assembly

8-315. The A16 Amplitude Assembly, shown in *Figure 8-39,* consists of the analog feedback loop, the analog to digital converter (which digitizes the dc output voltage from the feedback loop), the switching circuitry required for the U2 and A27 assemblies, and the digital circuitry including the U4 ROM containing the amplitude measuring algorithm.

8-316. ANALOG LOOP. The analog feedback loop consists of U18 differential error amplifier, U14, transistors Q10, Q11, Q12 and associated circuitry for generating the 100 kHz feedback signal, range amplifier U12, switch U17 and relay K1.

8-317. The LDIRECT signal sent to transistor Q13 from Counter Assembly A13 is set low by the microprocessor if the front panel RANGE switch (read by the microprocessor from A2U12, pin 9) is in the 10 Hz-500 MHz position. LDIRECT low causes relay K1 and bilateral switch U17 to connect the A27 low frequency module 100 kHz input and the two detector outputs to the A16 circuits. LDIRECT high causes the U2 multiplexer inputs and outputs to be connected to the A16 circuits. Since the front end is being switched between frequency measurements and amplitude measurements, the output of either detector appears as a negative pulse train. To prevent switching the front end during troubleshooting, use diagnostic mode 5 or 6. Diagnostic modes are described in *Table 8-8.*

8-318. Consider circuit operation for the case where the front panel RANGE switch is in the 0.5 to 18 GHz position. In this case, the DETECTED RF (HF) signal from U2 is connected to the inverting input of U18 and the DETECTED 100 kHz (HF) signal from U2 is connected to the noninverting input of U18. The 100 kHz (HF) input is connected through U18 and associated circuits to buffer U15. The dc voltage difference between the detected 100 kHz signal and the detected microwave signal is amplified by U18. However, the negative feedback of the loop causes the

difference between the detected RF and detected 100 kHz to be very small. Although the voltage difference is amplified by the very high gain of U18, the U18 output voltage stays within the dynamic range of U18 because the difference is extremely small. (When a frequency measurement is being made, the output of U18 is shorted to its input by switch U13(2, 3) to prevent U18 from saturating.) The output of U18 drives U14 which converts the input voltage to a current by driving Q11. The current flowing through Q11 sets the gain of differential pair Q10, Q12 and this gain is directly proportional to the Q11 current. The 1 MHz input to A16 is applied to decade divider U10 and the 100 kHz output is amplified by differential pair Q10, Q12. The output of Q10, Q12 is filtered by the 100 kHz active filter U16 to produce a 100 kHz sinewave. Since this signal must drive 50 ohms on the U2 assembly (or A27 assembly), it first passes through buffer driver U15. The gain of the loop is adjusted by resistor R29.

8-319. The voltage at the input to U14(3) is directly proportional to the amplitude of the microwave signal since the voltage at U14(3) determines the amplitude of the 100 kHz signal. The voltage at U12(3) is equal to the voltage at U14(3) due to the feedback around U14. Amplifier U12 amplifies this voltage by X1 (for input levels above about -2 dBm) or by X16 (low range for levels below about -2 dBm). The gain of U12 is controlled by Low Range bilateral switch U13 which is controlled by the LLRNG bit output of U5(14). If U5(14) is low, then U12 amplifies by X16 [U13(7, 6) open and U13(10, 11) closed]. If U5(14) is high, then U12 amplifies by X1 [13(7, 6) closed, and U13(10, 11) open]. Any dc offset in the loop and in U12 is corrected by adjusting resistor R26.

8-320. U8 ANALOG TO DIGITAL CONVERTER. The output of U12 feeds the U8 analog to digital converter which converts the dc voltage at U8(5) to a 13-bit, 2's complement, digital word. The microprocessor, after detecting the end of the A to D conversion, reads the digital word in two 8-bit bytes. The input power is computed and displayed. ROM U4 contains the firmware subroutine which controls the amplitude measurement process and PROM U3 contains the corrections for frequency (as measured by the counter) and level (as measured by the U8 Analog to Digital Converter).

8-321. Register U5 is used by the microprocessor to write to the A16 Amplitude Assembly. U1(10) clocks the data on the data lines into U5 when the LAMP MTR signal is low and the LR/HW signal goes low to high.

8-322. U5(3) contains the START CONVERSION input to U8. When START CONVERSION goes high, U8's digital logic is initialized and BUSY is latched high. When START CONVERSION returns low, the conversion begins.

8-323. U5(6) controls the HIGH BYTE ENABLE (HBEN) input of U8 and the STATUS ENABLE (STEN) input of U8. When HBEN is high, the high order data bits (five most significant bits) appear at U8(29, 30, 31, 32, 33). HBEN low causes these outputs to float (high Z state). STEN high enables the status bits BUSY, $\overline{\text{BUSY}}$, and OVERRANGE (OVRG). BUSY indicates conversion complete. The microprocessor waits 40 ms after the START pulse and then continually reads the BUSY bit U8(36) until the bit is low (conversion complete). If conversion complete does not occur within 140 ms, error message E16.1 is displayed. When U8(36) is high, the conversion is in progress (approximately 40 ms). The overrange bit, OVRG, at U8(34) goes high if the input voltage has exceeded the plus or minus full scale voltage by at least 1/2 LSB.

8-324. Register U5(7) controls the Low Byte Enable (LBEN) input of U8. When LBEN is high, the low order data bits (eight least significant bits) appear at U8(21, 22, 23, 24, 25, 26, 27, 28). LBEN low causes these outputs to float. After the microprocessor determines that the conversion is over, the high order bits are read and then the low order bits are read.

8-325. Multiplexers U6 and U7 are used to switch between the output of U8 and the output of PROM U4. When U2(4) goes low, the three-state outputs of U6 and U7 are enabled. U2(4) goes low when LAMP MTR and LR/HW are both low or when U1(2) goes high. U1(2) goes high when the correction data in PROM U4 is being read. The signal at U6(1) and U7(1) determines which

output will be read by the microprocessor. If U2(5) is high, then the U8 ADC outputs are selected U6(3, 6, 13, 10) and U7(3, 6, 13, 10). If U2(5) is low, then the U4 PROM outputs are selected. The output of U8 is first read by the microprocessor by having U6, 7(1) high. Then U6, 7(1) goes low and the correction is read from U4 for that particular frequency and level.

8-326. MULTIPLEX CONTROL. Transistors Q1 through Q9 and associated circuitry are responsible for controlling the rf signal multiplexing in U2 and A27. In addition, this circuitry controls the attenuation of the pin diode U2 CR1 to allow 0.5 to 18 GHz frequency measurements at levels to +20 dBm.

8-327. When a frequency measurement is made, the microprocessor sets U5(10) high which not ony closes switch U13(2, 3) but also turns on transistor Q8 and Q7. With the collector of Q7 near +15V, Q5 is turned on and Q3 is turned off. The emitter of Q3, which is the Amplitude Select (AMPL SEL) signal sent to A27, will be near +15 volts, thereby routing the low frequency input signal to the A3 Direct Count Assembly for a frequency measurement. With U5(10) low, Q8 and Q7 are off. The base of Q5 and Q3 is pulled toward -15 volts, which turns off Q5 and turns on Q3. The emitter of Q3 drops to near -15V which causes A27 to route the low frequency input signal to the A27CR3 detector for an amplitude measurement.

8-328. Consider what happens at the same time for the U2 Assembly. For amplitude measurements, U5(10) is low and U5(11) is high. U5(11) high turns on Q6. Since there is no signal into the sampler, the current source on A25 is sourcing high current (approximately 30 mA), via the AT1 signal input, to the collector of Q6. Since Q6 is on, this current does not greatly raise the voltage at the base of Q9 so that Q9 is on, applying approximately +2.5 volts to the AMPL ON input of U2. Since U5(10) is low, U1(6) is high and Q1 is turned off. Since Q6 is on, Q4 is off and Q2 is off. The FREQ ON output therefore floats near ground.

8-329. For frequency measurements and no attenuation, U5(10) high and U5(11) low cause Q6 to be off and Q1 to be on. Since attenuation is not wanted, the high current from AT1 develops a voltage across R10 which is sufficient to raise the base of Q9 toward +5 volts, thereby turning Q9 off so that AMPL ON floats near ground. Since Q6 is off, Q4 is on and Q2 is on. Both Q2 on and Q1 on cause a high level of current to be supplied to the PIN diode U2CR1 at a level near +2.5 volts. The high current through the diode provides little attenuation to the microwave signal.

8-330. For frequency measurements with attenuation, the current supplied by AT1 drops to a very low level which causes the voltage at the collector of Q6 to be near ground. This means that Q9 is on, Q4 is off and Q2 is off. Q1 is still on so that FREQ ON is still at +2.5 volts but with Q2 off, a lower level of current is being driven through PIN diode U2CR1. This low level of current increases the diode's attenuation by approximately 15 dB.

8-331. OPTION 003 EXTENDED DYNAMIC RANGE

8-332. Extended Dynamic Range Option 003 provides automatic attenuation of input signals in the 500 MHz to 18 GHz range. This option extends the dynamic range of operation to 42 dB for signals in the 500 MHz to 12.4 GHz range and to 35 dB for signals in the 12.4 GHz to 18 GHz range.

8-333. When the input signal level to the high frequency range input of the 5342A exceeds approximately +5 dBm, the high level is detected by a circuit in A25 Preamplifier Assembly as shown in the block diagram, *Figure 8-18.* The detector turns off the current source to the A16 circuit which causes diode CR2 in the U2 assembly to conduct heavily and attenuate the input signal. When the input signal level drops to approximately -15 dBm, the Low Power Reset (LPWR RST) signal is generated by the detector circuit on A11 IF Limiter Assembly. The LPWR RST signal resets the detector circuit in A25 Preamplifier and allows the current source to turn on the current to the A16 circuit. This causes diode CR1 in the U2 assembly to conduct heavily and pass the input signal to U1 Sampler.

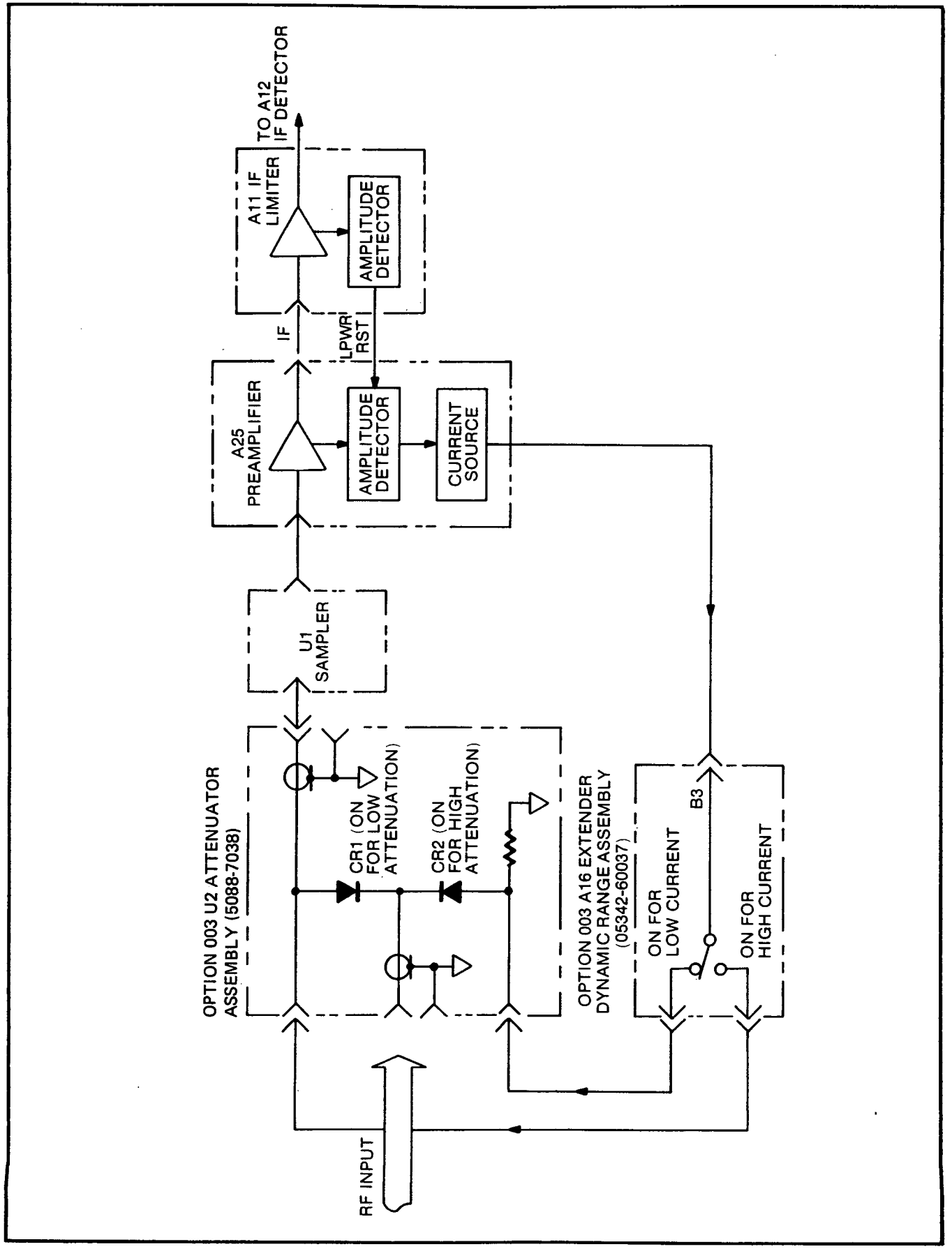

Figure 8-18. Option 003 Extended Dynamic Range Block Diagram

8-334. The schematic diagram for the Option 003 is shown in *Figure 8-40.* The A16 assembly shown in the diagram plugs into the same connector used for Option 002 A16 Amplitude Assembly and the U2 assembly is installed inside the high frequency input connector as is a similar module used by Option 002. Therefore, only one of these options can be installed in the same instrument.

8-335. A detailed description of the operation of Option 003 circuit shown in the schematic diagram is provided in the following paragraphs.

8-336. For low attenuation of the input signal, a high level current is supplied from the current source in A25 Preamplifier Assembly to pin B3 on A16 Extended Dynamic Range Assembly. See *Figure 8-40.* This current turns on transistor A16Q3 which turns on Q1 and provides current from the +5V supply thru transistor Q1 and resistor R3 to feedthru capacitor C5 on U2 Attenuator Assembly via A22 Motherboard. This current passes thru coil U2L2, diode CR1 and coil L1 to ground. Diode CR1 is turned on heavily with approximately 30 mA of current. This allows the input signals (RF IN) at J1 to flow freely thru diode CR1, capacitor C2 to RF OUT (to U1 Sampler). This is the low attenuation mode.

8-337. For the high attenuation mode, there is little or no current from the current source supplied to A16B3. In this case, transistor Q3 will not be turned on and transistor Q2 will be turned on by a base current being drawn thru resistor R6, diode CR1 and resistor R4 to the -5V supply. For this high attenuation mode transistor Q2 is turned on, Q1 is turned off. With transistor Q2 on, current is drawn from the +5V supply thru Q2, and resistor R7 to feedthru capacitor C7 on U2 via A22 motherboard. This current passes thru coil U2L3, diode CR2 and coil L1 to ground. Diode CR2 is turned on heavily with approximately 30 mA of current. This causes the input signals (RF IN) to flow freely thru diode CR2, capacitor C4 and dissipate in resistors R9 and R7 to ground.

8-338. In addition to turning on diode CR2 heavily for the high attenuation mode, diode CR1 is turned on lightly (with less than 1 mA of current) to act like a resistor of 100 to 200 ohms to allow a small amount of signal to pass through diode CR1 and capacitor C2 to RF OUT and to U1 Sampler, providing 15 to 18 dB of attenuation. The current that turns diode CR1 on very lightly is provided from the +5V supply thru resistor R2 and R3 to U2C5, L2, CR1 and L1.

8-339. The current thru diode CR1 is determined by the value of resistor A16R2 which is selected at the factory during manufacture to produce the correct amount of attenuation in the high attenuation mode. This value is labeled on the outside of the U2 assembly.

8-340. OPTION 004 DIGITAL-TO-ANALOG CONVERSION (DAC)

8-341. The digital-to-analog (DAC) conversion option (004) provides an analog output at the rear panel DAC OUT connector. Any group of three consecutive digits on the front panel display may be selected to produce an analog output of from 0 to 10 volts, dc as described in *Figure 3-5.* This conversion is performed by the circuit shown in *Figure 8-25.* The components of this circuit are added to the A2 Display Driver Assembly to provide Option 004.

NOTE

The following description assumes a knowledge of the theory of operation of A1 Display, A2 Display Driver (paragraph 8-132) and A14 Microprocessor (paragraph 8-225).

8-342. The four data lines, D0-D3, and two address lines A_0, A_1 are connected to the input of the DAC circuit as shown in *Figure 8-25.* These lines from A14 Microporocessor are connected via U16 on A2 assembly as shown in *Figure 8-24.* The only other signal input to the DAC circuit is the Load Digital Analog (LDA) signal from Decoder U17 on A14 Microprocessor.

8-343. Data lines D0-D3 are connected to counters U14, U20 and U21 which act as buffer registers (control lines connected to +5V). When LDA is low, the A_0 and A_1 lines are decoded by U15 to provide a clock signal to the buffer registers. Each of the buffer registers provides a 4-bit output to the 12-bit digital-to-analog converter U23. Register U14, U20 and U21 provide the least-, next- and most-significant digit, respectively, to U23 for conversion to analog voltage which is output at pin 15 to the DAC OUT connector.

8-344. The GAIN ADJ variable resistor R25 and OFFSET variable resistor R27 are internal service adjustments to set the high and low limits of the DAC output voltage. Refer to paragraph 5-41 for adjustment procedures.

8-345. To keep incremental changes in the DAC output as small as possible, the 5342A should be operated in the manual mode with minimum required resolution and as fast a sample rate as possible. If operating with a low sample rate or high resolution (1 Hz is highest) and a rapidly changing counted input, the DAC output will change in large increments. The AUTO operating mode may also have a similar effect with a resultant loss of smoothness in the DAC output.

8-346. OPTION 011 HEWLETT-PACKARD INTERFACE BUS (HP-IB)

8-347. Introduction

8-348. The A15 HP-IB Assembly serves as an interface between the microprocessor on A14 and the device controlling the lines of the HP interface bus as shown in *Figure 8-38*. The A15 HP-IB consists of seven interface registers (which are used by the microprocessor for interpreting commands and data, sending status, sending data, interpreting interrupts, etc.), two command decoding ROM's, source handshake circuitry, and acceptor handshake circuitry.

8-349. Interface Registers

8-350. There are seven interface registers on A15 which are used by the A14 microprocessor to communicate with the device controlling the HP interface bus. A register is selected by the microprocessor when the microprocessor sends that particular register's address. This address is decoded by 1-of-8 decoder U11. Decoder U11 is enabled by the LHPIB signal (decoded from address lines on A14) and the phase 2 clock, $\phi 2$, also from A14. A particular register is selected by decoding the two-least-significant address lines of the microprocessor, LAØ and LA1, in addition to the read/write line, LR/HW also from A14. The following table shows which register is selected for each combination of the three inputs to U11, provided U11 is enabled by LHPIB and $\phi 2$.

U11(3) (LR/HW)	U11(2) (LA1)	U11(1) (LAØ)	U11 OUTPUT GOES LOW	ENABLES REGISTER
0	0	0	U11(15)	U30 STATE IN
0	0	1	U11(14)	U15 COMMAND IN
0	1	0	U11(13)	U18 INTERRUPT IN
0	1	1	U11(12)	U27 DATA IN
1	0	0	U11(11)	— —
1	0	1	U11(10)	U16 CONTROL OUT
1	1	0	U11(9)	U24 STATUS OUT
1	1	1	U11(8)	U21 DATA OUT

8-351. State in buffer U30 is read by the microprocessor when the microprocessor wants to determine the state of the interface. Listen flip-flop U20B, talk flip-flop U20A, serial poll mode flip-flop U29B, remote flip-flop U29A, and service request flip-flop U9A are all buffered by U30. Buffer U30 is enabled by U11(15) going low.

8-352. Command In register U15 is read by the microprocessor whenever an addressed command is sent by the controller.

8-353. Interrupt In buffer U18 is read by the microprocessor in response to an interrupt. The output of the interrupt buffer indicates why the A15 assembly generated the interrupt (LIRQ low).

8-354. Data In register U27 stores programming codes which have been sent over the HP-IB by the controller. Data In register U27 is clocked by decoding ROM U23(5) which sets Data flip-flop U19A. After one byte of ASCII program data has been clocked into U27, an interrupt is generated by A15 and the microprocessor reads the U18 Interrupt In buffer to find out why the interrupt was generated. Since U18(2) is high, the microprocessor knows that program data is ready to be read from U27. The microprocessor then reads U27. If the byte completes a code (for example, the "5" of the code "SR5"), the microprocessor executes the code and then continues executing the operating program. If the byte does not complete a code, the microprocessor waits until the completed code has been sent.

8-355. Control Out register U16 is used by the microprocessor to control the HP-IB board. For example, in response to a front panel reset, the microprocessor returns A15 to local control by setting U16(10) low then high, which resets the remote flip-flop U29B. On power up, U16(2) is set low then high which resets Serial Poll FF U29B, Talk FF U20A, and Listen FF U20B. When measurement data is sent to the HP-IB, the microprocessor sets U16(12) low which sets the EOI control line of the HP-IB low after the final byte of the data message is sent (i.e., after CR, LF).

8-356. Status Out register U24 is used by the microprocessor to send a status byte when the serial poll mode is ordered by the system controller. The microprocessor sends octal 120 (01010000) to indicate that it has pulled on SRQ (bit 7) and that a measurement has been completed (bit 5).

8-357. Data Out register U21 is used by the microprocessor to output measurement data, one byte at a time, to the HP-IB. U21 is clocked by the Address Decoder U11 and is enabled by Serial Poll FF U29B being set low (not serial poll mode).

8-358. Command Decoding ROM's

8-359. Decoding ROM's U23 and U26 decode bytes sent over the data lines of the HP-IB. The acceptor handshake operates when LATN is low (address information is being sent) or when the Listen flip-flop has been set. Decoding ROM U23 is enabled only during the acceptor handshake cycle. The outputs of the ROM's generate interrupts, set or reset various control flags, and are read by the microprocessor via Command in register U15.

8-360. During the acceptor handshake, U1C(8) goes low for one period of the $\phi 2$ clock just prior to the HDAC signal going high, thus enabling U23 (U26 is always enabled). The byte on the data lines of the HP-IB appears at the inputs to U23 and U26. The ROM outputs change accordingly.

8-361. If the Unlisten command is given, U26(1) goes low and U23(2) goes high to clock Unlisten FF U20B, causing it to be reset. If a talk address other than the 5342A's talk address is sent, U23(1) goes high to clock into the U20A Talk FF the output of Address Comparator U33. Since the 5342A's talk address was not sent, U33(14) is low and the U20A Talk FF is set low. If the 5342A's listen address is sent, U23(2) goes high to clock a high from U33(14) into Listen flip-flop U20B.

8-362. Now that the 5342A is addressed to listen, consider what occurs when program data is sent. When program data appears at the inputs to ROM's U23 and U26, output U23(5) goes low to set the Data flip-flop, U19A. When U23(5) returns high, Data In register U27 is clocked and the data byte is stored in U27. At the same time that U23(5) goes low, U23(6) goes low which resets Interrupt flip-flop U14A and causes LIRQ (the output of U17B) to go low and interrupt the microprocessor. The microprocessor reads Interrupt In buffer U18 (which clears interrupt FF

U14A), determines that program data is in U27, and reads U27. When U27 is read (U27(1) goes low), the U19A Data flip-flop is reset in preparation for the next byte.

8-363. Consider what occurs when an addressed command or universal command is sent by the controller. If a command is sent, U23(4) goes low which sets Command flip-flop U14B. When U23(4) returns high, it clocks into Command In register U15 the decoded outputs from U26 as follows:

Command	U26(4)	U26(5)	U26(6)	U20(9)	
LLO (Local lockout)	0	0	0	1	Universal
DCL (device clear)	1	0	0	1	Commands
GTL (go to local)	0	0	1	0	
SDC (selected device clear)	1	0	1	0	Addressed
GET (group execute trigger)	0	1	1	0	Commands

8-364. At the same time that U23(4) goes low, U23(6) goes low. This sets Interrupt flip-flop U14A and causes LIRQ to go low, whch interrupts the microprocessor. The microprocessor reads Interrupt In buffer U18, determines that a command code is in U15, and reads U15. The microprocessor determines which command was sent according to the table and acts accordingly.

8-365. When the serial poll enable signal is sent, U26(2) goes high and U23(3) goes high to clock Serial poll flip-flop U29B to the high state. When the serial poll disable signal is sent, U26(3) goes low and U23(3) goes high to clock U29B to the low state.

8-366. Acceptor Handshake

8-367. The acceptor handshake is enabled by U1B(4) low (LATN control line of bus is low, indicating address information is being sent) or U1B(5) low (the 5342A has been addressed to listen). When the talking device puts data on the HP-IB data bus and pulls LDAV low indicating data valid, the acceptor handshake causes HDAC to go high (indicating that the data has been read into U27). After the data in U27 has been read by the microprocessor, the acceptor handshake causes HRFD to go high, indicating that U27 has been read by the MPU and that the MPU is ready to receive the next data byte.

8-368. A timing diagram of a typical acceptor handshake is shown below. The talker places a data byte on the eight data lines and, after allowing for settling, pulls LDAV low to indicate to the listener (5342A in this case) that there is valid data on the data bus. The first positive transition of the $\phi 2$ clock after LDAV goes low, clocks a high into flip-flop U3B(9). This causes the input to U3A(2) to go high. On the next clock, U3A(5) goes high and U3A(6) goes low. U3A(5) high and U3B(9) high cause U1C(8) to go low which enables ROM U23. When ROM U23 is enabled, Data flip-flop U19A(5) is set high which causes U32(12) to go high (HRFD goes low) and also clocks the data into U27. Simultaneously, LIRQ goes low to interrupt the microprocessor. The next $\phi 2$ clock causes U3B(9) to return low, thus disabling U23. Since U3B(9) is low and U3A(6) is low, HDAC goes high, indicating to the talking device that the data has been accepted (read into U27) and may be removed from the data lines. The talker then removes the data from the bus and takes LDAV high to indicate that there is not valid data on the bus. U3A(2) goes low when LDAV goes high. On the next positive transition of $\phi 2$, the low at the input to U3A is clocked into the output, causing U3A(5) to go low and U3A(6) to go high. This causes HDAC to return low. After the microprocessor reads the Interrupt In register U18 and determines that data is stored in U27, the U27 Data In register is read by the MPU. This causes the U19A data flag to be reset and also causes HRFD to go high, indicating that the Data In register has been read and is ready for another data byte. The handshake process then repeats as described.

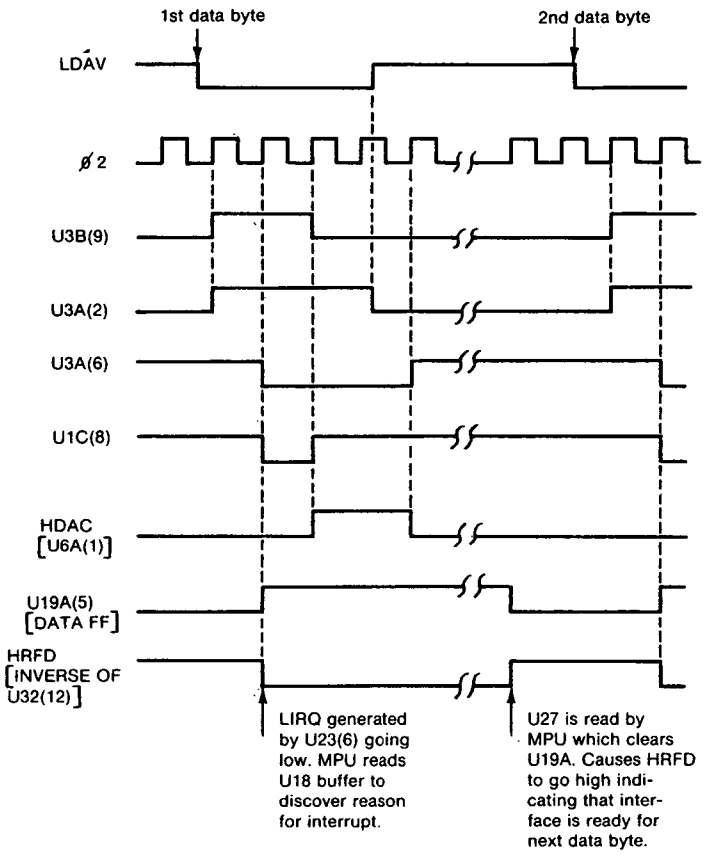

8-369. Source Handshake

8-370. The source handshake controls the LDAV control line of the HP-IB in response to the state of the HDAC and HRFD control lines which are controlled by the acceptor handshake circuitry in the listening device. When the 5342A operating program finishes a measurement, the microprocessor reads State In buffer U30 to see if the counter has been addressed to talk. If the counter has been addressed to talk, the microprocessor reads Interrupt In buffer U18 to determine the state of Data Out flip-flop U9B. If U9B(9) is high, then the previous data byte has been accepted by the listener and a new data byte may be written into Data Out register U21. When a data byte is written into U21, U9B(9) is reset low and the source handshake logic sets LDAV low, two $\phi 2$ periods later. When the listener sets HDAC high, U9B(9) goes high on the next positive transition of the $\phi 2$ clock. Since the listener has accepted the data, a new data byte is written into U21. However, LDAV will not go low again until the listener sets HRFD high to indicate that it is ready for more data. Data Out register U21 is always enabled if the Serial Poll FF U29 is set low. The output data bus drivers, U22, U25, U31, and the source handshake circuits however, are only enabled in talk mode and LATN set high.

8-371. A timing diagram of a typical source handshake is shown below. Since U9B(9) is high, the microprocessor clocks data into U21. This clock also resets U9B(9) low. U9B(9) going low causes the input to flip-flop U4B to go low, and U4B's output goes low on the next $\phi 2$ clock positive transition. Since U4(9) is low and HRFD is high, the input to flip-flop U4A(2) goes high and the U4(5) output goes high on the next clock. When U4(5) goes high, LDAV at U36(3) goes low. Sometimes later the listener set HDAC high to indicate that the data has been accepted. HDAC going high causes the U4(12) flip-flop input to go high and the U4(9) output goes high on the next clock pulse. Since U4(9) is high and U4(5) is high, U12(6) goes high and sets the Data Ready flip-flop U9(9) to high. When U9B(9) goes high, U4(2) input goes low and causes the U4(5) flip-flop output to go low on the next clock. This causes LDAV to return high. After LDAV goes high, the listener reset HDAC low in preparation for the next handshake cycle. Since

U9B(9) is high, the microprocessor writes the second data byte into U21. U21(11) going high resets U9B(9) to a low which sets the U4B(9) flip-flop output low. However, the source handshake logic can not indicate the presence of the second data byte (by pulling LDAV low) until the listener sets HRFD high. When HRFD finally does go high, the output of flip-flop U4(5) goes high on the first clock after HRFD goes high. U4(5) going high sets LDAV low. When the listener senses LDAV low, it sets HRFD low and the process continues as previously described.

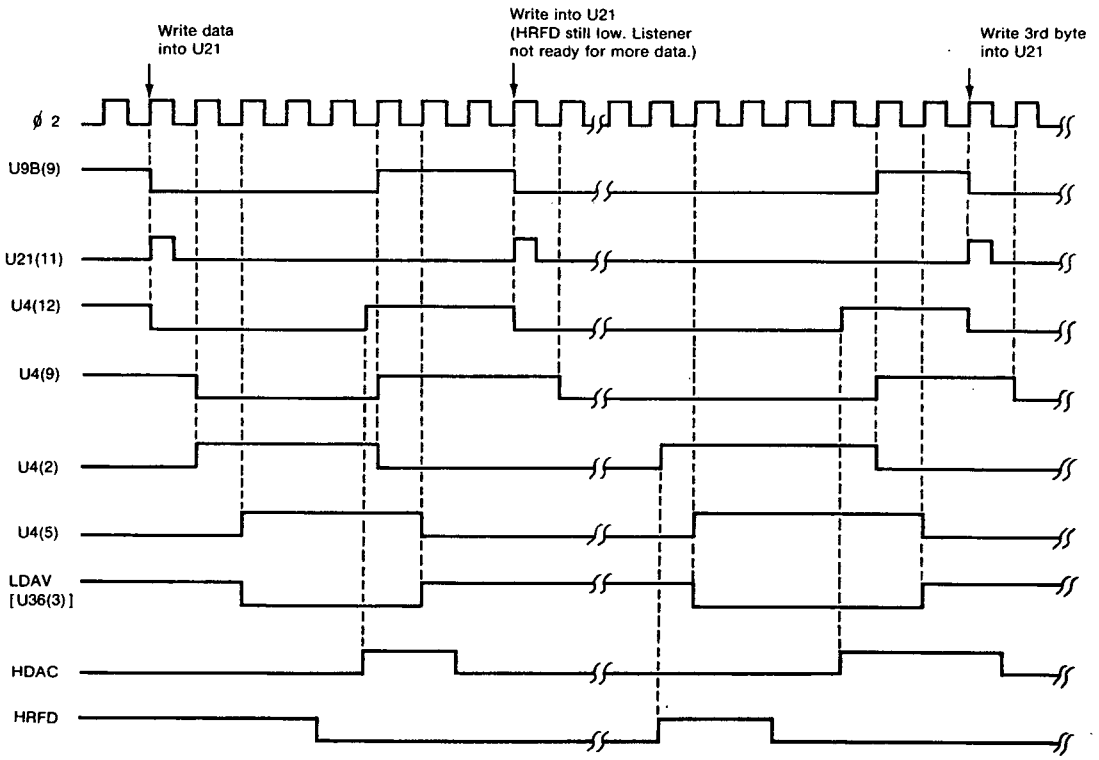

8-372. ASSEMBLY LOCATIONS

8-373. *Figures 8-19, 8-20, 8-21* and *8-22* shows the front (A1 Display Assembly) rear, top and bottom views, respectively, of the 5342A. The front and rear views show reference designators of the front and rear panel controls, connectors, and indicators. The top view shows assembly locations and adjustments.

8-374. TROUBLESHOOTING TO THE ASSEMBLY LEVEL (STANDARD INSTRUMENT)

8-375. Troubleshooting Technique

8-376. In the troubleshooting procedure outlined in *Table 8-5*, the 5342A is exercised through a series of operating modes which are arranged in an increasing order of complexity. As can be seen in *Table 8-6*, an increasing number of assemblies is exercised as the operating modes progress from the first mode (power-up diagnostic) to the last mode (AUTO/1 GHz). By noting the first mode in the sequence that fails, it is possible to isolate the defective assembly to a specific group of assemblies by noting those assemblies common to the current (failed) test *and all* previous tests (which passed). These common assemblies can be eliminated as being the source of the failure and only those assemblies which are not common to previous operating modes are examined. *Table 8-7* is a list of the noncommon assemblies for each of the operating modes and it is the basis for the troubleshooting procedure presented in *Table 8-5*.

8-377. *Tables 8-9* through *8-21* are individual troubleshooting procedures for various assemblies and assembly groups and are referenced in the overall troubleshooting of *Table 8-5*. By using the diagnostic modes of the 5342A, explained in *Table 8-8*, and the test equipment listed in *Table 1-4*, the troubleshooting procedure outlined in *Table 8-5* and *Tables 8-9* through *8-21* allows isolation of a failed assembly. By reading the detailed theory of operation of the assembly and referencing the dc voltages and 5004A signatures provided on the individual schematics, it should be possible to find the failed components.

8-378. *Figure 8-23* is a detailed description block diagram of the 5342A and is valuable in troubleshooting. *Figure 8-9* shows the relationship of the assemblies listed in *Table 8-6*.

8-379. RECOMMENDED TEST EQUIPMENT

8-380. Test equipment recommended for troubleshooting, adjustments, operational verification, and full performance testing is listed in *Table 1-4*. Equipment other than that listed may be used if it meets the required characteristics.

Table 8-5. Overall Troubleshooting

1. POWER UP DIAGNOSTIC — Apply power to the 5342A and press front panel power switch to ON. The power-up diagnostic routine progressively lights all LED segments in the 5342A display, from left to right. Finally, the following should be displayed briefly:

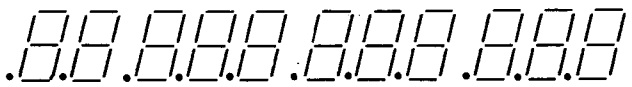

If the 5342A powered up properly, go to step 2. If not:

a. If E's fill the display, then RAM A14U12 failed the check sum routine exercised on power up. A14U12 may be faulty if none of the address lines AØ—A15 or data lines DØ—D7 are stuck low or high. Check address lines and data lines on A14 for stuck nodes (use current tracer such as 547A to find faulty device). Stuck data lines may be caused by stuck ROM outputs (U1, U4, U7) or stuck buffer inputs (U2, U3). If 1 is displayed, then ROM A14U7 failed the check sum routine exercised on power up. Since the RAM proved good (E's were not displayed), the data lines and address lines be OK. Replace A14U7.

   1) If 2 is displayed, then ROM A14U4 failed the check sum routine exercised on power up. Replace A14U4.

   2) If 3 is displayed, then ROM A14U1 failed the check sum routine exercised on power up. Replace A14U1.

   3) If E16.0 is displayed (amplitude Option 002 only) then the check sum performed on PROM A16U3 failed. In this case, a new multiplexer/PROM (matched pair) P/N 05342-80005, must be ordered and installed (blue stripe exchange P/N 05342-80505).

   4) If E16.1 is displayed (amplitude Option 002 only) then the analog-to-digital conversion did not take place in A16U8 (U8 pin 36, BUSY, remains high).

b. Check for the clock on A14. If the clock is not present, check A24, A18, A17U8.

c. Go to *Table 8-9* for A14 testing.

d. Go to *Table 8-10* for power supply troubleshooting.

e. Go to *Table 8-11* for A1, A2 testing.

Table 8-5. Overall Troubleshooting (Continued)

2. DIAGNOSTIC MODE 8 — Put the 5342A in diagnostic mode 8 (see *Table 8-8* for a description of diagnostic modes and how to set them). Perform the keyboard check, paragraph 3-43. If the 5342A operates properly, go to step 3. If not:

   a. Go to *Table 8-11* for A1, A2 testing. If the 5342A passed the power-up diagnostic test but failed the diagnostic mode 8 test, then likely problems on A1, A2 are failed A1 keyboard or failed A2 keyboard decoding circuitry such as A2U22, U12, U18, U19, etc.

   b. Go to *Table 8-9* for A14 testing. The difference between this test and the previous test is that the LKBRD device select is sent by A14.

3. DIRECT COUNT MODE — Apply the 10 MHz FREQ STD OUT from the rear panel of the 5342A to the direct count input (front panel BNC). Place the impedance select switch in 50Ω position and place the range switch in the 10 Hz—500 MHz position. If the counter counts 10 MHz ±1 count for all resolution settings, go to step 4. If not:

   a. Check the A3 Direct Count Amplifier (*Table 8-12*).

   b. Check the A14 Microprocessor as described in *Table 8-9*. A difference between this test and previous tests is that LCTRRD, LCTRWRT, TMRD, LTMWRT device select codes are used.

   c. Check the A13 counter (*Table 8-13*). Only the A counter is used in this mode.

   d. Check the A17 timing generator (*Table 8-14*). Only the gate time generation circuitry is used in this mode.

4. CHECK MODE — Place the 5342A in CHECK (place range switch in 500 MHz—18 GHz position) and verify that the counter displays 75 MHz ±1 count for all resolution settings. If the counter operates properly, go to step 5. If not:

   a. Go to *Table 8-9 for A14 Microprocessor testing. A difference between this test and* previous tests is that LSYNHI, LSYNLO, LPDREAD, LPDWRT device select codes are used.

   b. Check that the 500 kHz output of A18, available at XA18(3), is present.

   c. Go to *Table 8-15* for A8, A9, A10 Main Loop Synthesizer troubleshooting.

   d. Go to *Table 8-16* for IF troubleshooting. Since the check signal enters the IF chain at A11($\overline{7}$, $\overline{7}$) the A25 Preamplifier and the U1 Sampler can be eliminated as possible failed modules.

NOTE

In the following step, for instruments containing Option 002 or 003, inject the 50 MHz test signal at the U1 Sampler Input. This requires removal of the semirigid coax cable from U1 input. This action is necessary due to the filter in U2 at the 500 MHz—18 GHz input.

5. AUTO/50 MHz MODE — Place the 5342A in AUTO mode, with the range switch in the 500 MHz—18 GHz position and apply a 50 MHz signal at -10 dBm to the high frequency input. Verify that the counter counts 50 MHz ±1 count for all resolution settings. If the 5342A operates properly, go to step 6. If not:

   a. Place the 5342A in diagnostic mode 0. If the counter displays SP or SP2 only (instead of SP23 followed by Hd), then the failure is likely in the U1 Sampler or A25 Preamplifier since A11 and A12 are used in the CHECK mode. Go to IF troubleshooting in *Table 8-16*.

   b. If the counter (still in diagnostic mode 0) displays SP23 but does not display Hd, suspect A17 PRS generation circuitry. Go to *Table 8-14* for A17 Troubleshooting.

   c. If the counter displays an incorrect answer, go to diagnostic mode 4 to verify that the IF measured is 50 MHz. If it is not, check the A counter on A13 (*Table 8-13*). Also go to diagnostic mode 1 to check the N number computed. If N is not 0, check the B counter on A13 (*Table 8-13*).

Table 8-5. Overall Troubleshooting (Continued)

6. AUTO/1 GHz MODE — Place the 5342A in AUTO mode, with the range switch in the 500 MHz—18 GHz position and apply a 1 GHz signal at -25 dBm to the high frequency input. Verify that the counter counts 1 GHz ±1 count for all resolution settings.

   a. Place the 5342A in diagnostic mode 0. If the counter displays SP (instead of SP23 followed by Hd), then the failure is likely to be in the A26 Sampler Driver since the other components in the IF were exercised in step 5. Go to *Table 8-18* for A26 Sampler Driver troubleshooting.

   b. Check U1 Sampler per *Table 8-16,* step b.

7. AMPLITUDE MODE — Place the 5342A in Amplitude Mode and proceed:

   a. Set 5342A front panel range switch to the 10 Hz-500 MHz position and the impedance select switch in the 50 ohm position. Connect rear panel FREQ STD OUT to direct count input (front panel BNC) of 5342A. Verify that counter displays 10 MHz at approximately 11 dBm.

   b. If the counter displays an erroneous frequency reading, problem is likely to be in A27 Low Frequency Amplifier Assembly switching diodes CR1, CR2 or in the direct count assembly. (Refer to DIRECT COUNT TEST MODE in step 3.)

   c. Set 5342A front panel range switch to 500 MHz-18 GHz. Apply a 600 MHz signal at 0 dBm the input N-type connector of the 5342A. Verify that counter displays the correct frequency and power readings.

   d. If the counter displays are erroneous frequency reading, problem is likely to be in U2 High Frequency Amplitude Assembly, or U1 Sampler and related circuitry. (Refer to AUTO/1 GHz MODE in step 6.)

   e. If the instrument displays an erroneous amplitude/frequency measurement or an erroneous amplitude measurement only, refer to *Table 8-20.*

8. HP-IB MODE — Perform the Option 011 HP-IB Performance Verification as outlined in paragraphs 4-19 through 4-26 of the manual. If the 5342A fails the performance verification program, refer to *Table 8-21,* HP-IB (Option 011) Troubleshooting.

Table 8-6. Assemblies Tested by Test Mode

ASSEMBLIES	POWER-UP DIAG.	TEST MODES							TROUBLE-SHOOTING TABLE NO.
		SET 8 DIAG.	DIRECT COUNT	CHECK	AUTO 50 MHz	AUTO 1 GHz	AMPL	HP-IB	
A1 Keyboard Display	√(1)	√	√	√	√	√	√		Table 8-11
A2 Display Driver	√(2)	√	√	√	√	√	√		Table 8-11
A3 Direct Count Amp			√				√		Table 8-12
A4 Offset VCO						√	√		Table 8-17
A5 RF Multiplexer						√	√		Table 8-19
A6 Offset Loop Amp						√	√		Table 8-17
A7 Mixer/Search Control						√	√		Table 8-17
A8 Main VCO				√		√	√	√	Table 8-15
A9 Main Loop Amp				√		√	√	√	Table 8-15
A10 Divide-by-N				√		√	√	√	Table 8-15
A11 IF Limiter				√	√	√	√	√	Table 8-16
A12 IF Detector				√	√	√	√	√	Table 8-16
A13 Counter			√(7)	√(7)	√	√		√(7)	Table 8-13
A14 Processor	√(3)	√(6)	√(8)	√	√	√		√	Table 8-9
A15 HP-IB (Option 011)								√	Table 8-21
A16 Amplitude (Option 002)							√		Table 8-20
A17 Time Base Generator	√(4)	√(4)	√(9)	√(9)	√	√	√	√(9)	Table 8-14
A18 Time Base Buffer	√(5)	√(5)	√(5)	√	√	√	√	√	Table 8-5
A19 Primary Power	√	√	√	√	√	√	√	√	Table 8-10
A20 Secondary Power	√	√	√	√	√	√	√	√	Table 8-10
A21 Switch Drive	√	√	√	√	√	√	√	√	Table 8-10
A24 Oscillator	√	√	√	√	√	√	√	√	Table 8-5
A25 Preamplifier					√	√	√		Table 8-16
A26 Sampler Driver						√	√		Table 8-18
U1 Sampler					√(10)	√	√		Table 8-16
U2 HF Amplifier (Option 002)							√		Table 8-20
A27 LF Amplifier (Option 002)							√		Table 8-20

NOTES:
(1) Keyboard not exercised.
(2) Keyboard decoding circuitry such as A2U22, U12, U18, U19 not exercised.
(3) HDSPWRT select code is only device select code exercised.
(4) A17U8 only is exercised; sends 1 MHz clock to A14.
(5) 1 MHz output only is used.
(6) HDSPWRT, LKBRD select codes are only device select codes exercised.
(7) B counter not exercised.
(8) LPDREAD, LPDWRT, LSYNHI, LSYNLO device select codes not exercised.
(9) PRS generation circuitry not exercised.
(10) Tests only that at least one of the two diodes is not open.

Table 8-7. Probable Failed Assemblies by Test Mode

TEST MODES					
POWER-UP DIAG.	**SET 8 DIAG.**	**DIRECT COUNT**	**CHECK**	**AUTO 50 MHz**	**AUTO 1 GHz**
A1	A1(1)	A3	A8	A17(9)	A4
A2	A2(2)	A13(4)	A9	A25	A5
A14	A14(3)	A14(5)	A10	U1	A6
A17		A17(6)	A11	A13(10)	A7
A18			A12		A26
A19			A14(7)		U1
A20			A18(8)		
A21					
A24					

NOTES:

(1) A1 keyboard.
(2) A2 keyboard decoding circuitry such as A2U22, U12, U18, U19.
(3) A14 LKBRD device select code.
(4) A counter.
(5) A14 LCTRRD, LCTRWRT, LTIMRD, LTIMWRT device select codes.
(6) A17 gate time generation.
(7) A14 LSYNHI, LSYNLO, LPDREAD, LPDWRT device select codes.
(8) A18 500 kHz output.
(9) A17 prs generation.
(10) A13 B counter exercised.

Table 8-8. Diagnostic Modes of the 5342A

TABLE 8-8
DIAGNOSTIC MODES

To go to a diagnostic mode, press front panel set key twice (SET, SET) and then the number corresponding to the desired mode. For example, pressing SET SET 8 goes into diagnostic mode 8, the keyboard check. To leave a diagnostic mode, press RESET . The following describes the available diagnostic modes:

DIAGNOSTIC MODE	FUNCTION
0	Displays mnemonics SP 23 followed by Hd. SP indicates that the VCO's are sweeping. 2 indicates that the unlatched power detector is set, indicating an IF of sufficient amplitude and an IF in the range of 50—100 MHz. 3 indicates that there is a proper IF for both the Main VCO and OFFSET VCO. 3 is displayed after the VCO's have stopped sweeping. Hd indicates harmonic determination has been complete. It is displayed at the end of the prs.
1	Counter displays Main OSC in MHz to 100 kHz, sign of IF (+ for subtract and – for add) and the harmonic number N. For example: 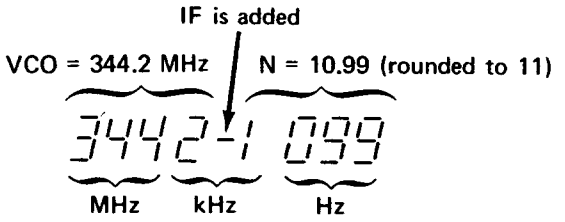 This is displayed at the end of the harmonic determination. (The (–) sign of the IF indicates that the Nth harmonic of the VCO is **less** than the unknown so that the IF must be added; the (+) sign of the IF indicates that the Nth harmonic of the VCO is **greater** than the unknown so that the IF must be subtracted.)
2	Counter continuously displays the contents of the A counter during harmonic determination.
3	Counter continuously displays the contents of the B counter during the harmonic determination.
4	Counter continously displays the measured IF frequency. Resolution determined by resolution selected before going to diagnostic mode 4.
5 (Option 002 only)	Put 5342A in AMPL mode (Option 002), then select diagnostic mode 5. Counter displays continously the corrected amplitude. Multiplexer on front end is **not** switching between frequency and amplitude.
6 (Option 002 only)	Put 5342A in AMPL mode (Option 002), then select diagnostic mode 6. Counter display continously **un**corrected amplitude (not corrected for level and frequency on A16). Multiplexer on front end is **not** switching.
7	Sweeps Main VCO from 350 MHz to 300 MHz in 100 kHz steps. Time between updates in VCO frequency determined by SAMPLE RATE setting. To stay at a particular frequency, put SAMPLE RATE to HOLD. (Remove input signal to counter, place counter in 500 MHz—18 GHz range and AUTO mode.)
8	Keyboard check. Refer to paragraph 3–43 for complete list of what should be displayed when each key is pressed.

To return to normal operation, press RESET .

Table 8-9. A14 Microprocessor Troubleshooting

1. Place the A14 Microprocessor Assembly on the extender board, P/N 05342-60036 which is shown below. Place the 5004A START and STOP probes on the B(4) test pin of the A14 extender board. (Or, place on AP clip on U8 of A14 and place the START probe and the STOP probe of a 5004A Signature Analyzer on A14U8(2), which is the most significant address line out of the U21 microprocessor (A15).) Place the CLOCK probe of the 5004A on the $\overline{VMA \bullet \phi_2}$ test point located in the upper righthand corner of A14. Place the GROUND probe of the 5004A on the ground test point of A14.

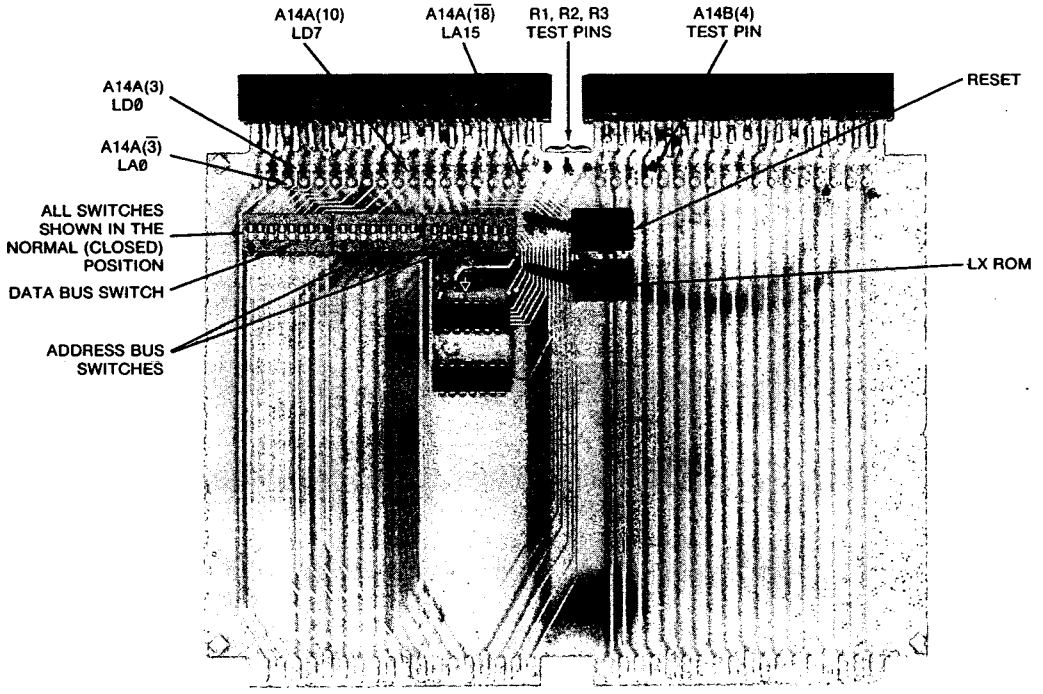

2. Set the 5004A for positive slope on START, STOP, and CLOCK (all pushbuttons of the 5004A should be out). Apply power to the 5342A.

3. Place the 5342A in free-run mode by moving A14 switch S2A to the up position and all S1 switches down (opens up data bus lines back into MPU U21). Ensure that the LX ROM switch on the A14 extender board is in the up position. Press the RESET switch on the A14 extender board.

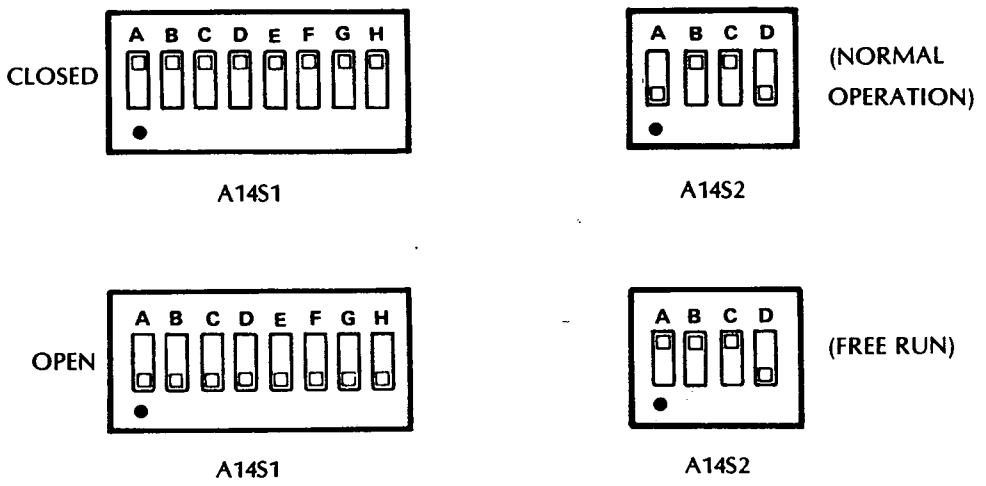

Table 8-9. A14 Microprocessor Troubleshooting (Continued)

TABLE 8-9
A14

4. Place the 5004A data probe on +5V and verify that the characteristic "1's" signature displayed on the 5004A is 0003. If 0003 is not displayed, then the U21 microprocessor is not free-running. If 0003 is displayed when the 5004A data probe is placed on +5V, go to step 5.

   a. Check the clock inputs to the microprocessor by looking at the $\phi 1$ (phase 1) clock test point on A14 and the $\overline{VMA \bullet \phi 2}$ test point. These signals should be as in the following oscilloscope photos.

      If these signals are not present, troubleshoot the clock generation circuitry U19, U22, U24, etc., on A14.

   b. If these signals are present, check diodes CR2, CR3, and switches A14S1 and S2. If these parts are good, then the U21 MPU is suspect.

   c. With switches S1 and S2 set for freerun, check for correct inputs, as listed below:

      $\overline{RESET}$ U21(40) - High, $\overline{NMI}$ U21(6) - High, $\overline{HALT}$ U21(2) - High, $\overline{IRQ}$ U21(4) - High, 3-State U21(39) - Low control

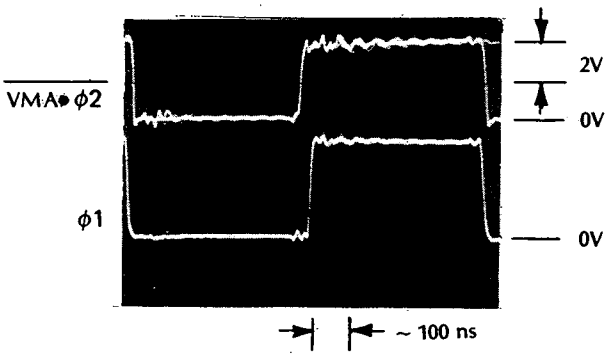

*Time base of scope out of CAL in order to get one complete period in photo.

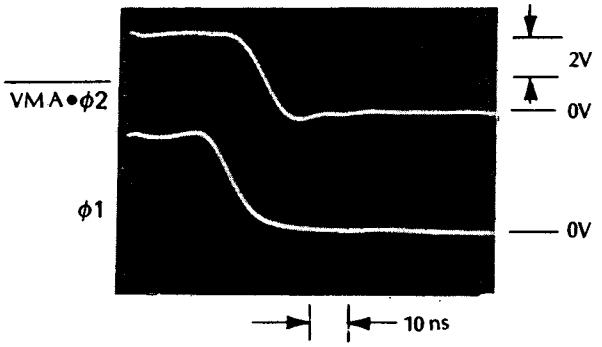

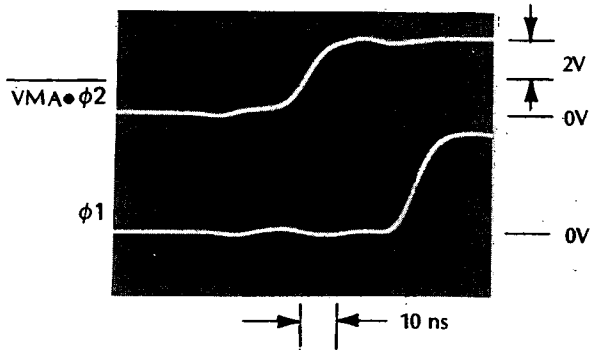

Table 8-9. A14 Microprocessor Troubleshooting (Continued)

5. Place the 5004A data probe on the following address signal points (available on the A14 extender board) and check that the proper free-run signatures are obtained:

XA14A($\overline{3}$) ... UUUF	XA14A($\overline{11}$) ... 7792
XA14A($\overline{4}$) ... FFFU	XA14A($\overline{12}$) ... 6322
XA14A($\overline{5}$) ... 8487	XA14A($\overline{13}$) ... 37C6
XA14A($\overline{6}$) ... P760	XA14A($\overline{14}$) ... 6U2C
XA14A($\overline{7}$) ... 1U5H	XA14A($\overline{15}$) ... 4FC9
XA14A($\overline{8}$) ... 0355	XA14A($\overline{16}$) ... 486C
XA14A($\overline{9}$) ... U75A	XA14A($\overline{17}$) ... 9UP2
XA14A($\overline{10}$) ... 6F99	XA14A($\overline{18}$) ... 0001

If these signatures are obtained, go to step 6.

a. Check the signatures on the MPU side of buffer/drivers U16, U18, U8. These signatures are adjacent to the A14 schematic. Correct or incorrect signatures should isolate the problem to either U21 or one or more of the buffer/drivers U16, U18, U8.

b. A signature may be incorrect because that particular address line is being held low or high by another assembly which is connected to the address bus. To check this possibility, isolate the A14 address bus from the other assemblies by setting the address bus switches on the A14 extender board all open (low).

6. Place the 5004A data probe on the following device select codes and check that the proper free-run signatures are obtained:

DEVICE SELECT CODE	LOCATION	SIGNATURE
HDSPWRT	U22(8)	U05H
LKBRD	U20(7)	FF48
LTIMRD	U20(9)	7311
LTIMWRT	U20(10)	9FF7
LCTRWRT	U20(11)	A732
LPDRD	U20(12)	A9FU
LPDWRT	U20(13)	6A70
LSYNHI	U20(14)	1A9U
LSYNLO	U20(15)	46A4
LCTRRD	U14(13)	94F1
LHPIB	U17(7)	CC1A
LAMPMTR	U17(6)	1P2A

If these signatures are correct, go to step 7.

a. If the signatures are not correct, check the inputs to the IC's with the incorrect signatures. If the inputs are not correct, troubleshoot backwards along the signal flow, from output to input, until a device is found where the input exhibits a correct signature but the output is incorrect. Change that IC.

b. If the inputs to U20, U22, U17 have good signatures, then either the IC is bad or the output line is being held high or low by some other assembly connected to that signal. To check this possibility, A14 must be isolated from the rest of the instrument. Perform as follows:

(1) Remove A14 assembly and place it near lefthand side of instrument.

(2) Connect a clip lead from the +5V test pin on A17 to the +5V test pin on A14.

(3) Connect a clip lead from the gound test pin on A17 to the ground test pin on A14.

(4) Connect an AP clip to A14U22. Connect a clip lead from test pin TP1 on A17 (1 MHz clock signal) to A14U22(4). The A14 assembly can now be exercised.

(5) Connect an AP clip to A14U8. Place the 5004A START and STOP inputs on A14U8(2).

Table 8-9. A14 Microprocessor Troubleshooting (Continued)

(6) Connect the 5004A CLOCK to $\overline{VMA \bullet \phi_2}$ test pin on A14 and GROUND to A14 ground test pin.

(7) Place the A14 board in free-run as in step 3.

(8) Measure the signatures again. If the A14 signatures are now good, then there is an assembly common to that signal which has a faulty input/output buffer. To detect which assembly this is, put A14 back in the instrument and pull assemblies which are connected to the failed A14 signal output, one at a time, until a good signature is obtained.

7. a. With the 5004A set up as in steps 1, 2, 3, place switch S2B in the down position:

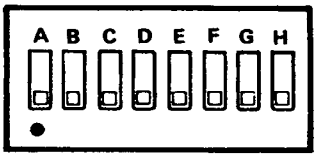

S1

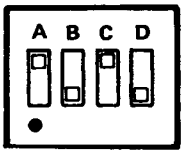

S2

b. Open the data bus switches on the A14 extender board as shown below:

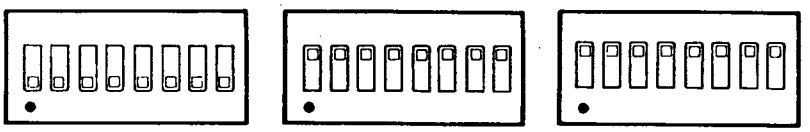

c. Connect the 5004A data probe GND connector to chassis ground and the ground lead of the test pod to ground.

d. Connect the START of the 5004A to the R3 test point of the extender board and the STOP to the R1 test point.

e. Set the 5004A for (–) slope START (↘)
(+) slope on STOP (↗)
(+) slope on CLOCK (↗)

f. Observe the following signatures: +5V – C690

Signal Name	Location	Signatures (for ROM Combinations listed)		
		A14U1 (P/N-1818-0329) A14U4 (1818-0330) A14U7 (1818-0331)	A14U1 (1818-0698) A14U4 (1818-0697) A14U7 (1818-0331)	A14U1 (1818-0698) A14U4 (1818-0697) A14U7 (1818-0706)
LDØ	A14A(3)	AA7C	27H1	HP37
LD1	A14A(4)	9UH5	H950	C256
LD2	A14A(5)	A4PF	OAP2	61P4
LD3	A14A(6)	F1P9	65PF	65PF
LD4	A14A(7)	P1P9	84U9	84U9
LD5	A14A(8)	AOAC	PC7U	PC7U
LD6	A14A(9)	312H	COF3	4925
LD7	A14A(10)	54C7	5P8H	358C

g. If these signatures are good, go to step 8.

h. Check the inputs to A14U2, U3 by changing switch A14S2 as follows:

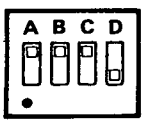

A14S2

Table 8-9. A14 Microprocessor Troubleshooting (Continued)

With the 5004A set up and connected as in steps 7d and 7e, take the following signatures:

Signal Name	Location	Signatures (for ROM Combinations listed)		
		A14U1 (P/N 1818-0329) A14U1 (P/N 1818-0330) A14U7 (P/N 1818-0331)	A14U1 (1818-0698) A14U4 (1818-0697) A14U7 (1818-0331)	A14U1 (1818-0698) A14U4 (1818-0697) A14U7 (1818-0706)
DØ	U3(9)	1FPC	9141	68A7
D1	U3(12)	2945	6UF0	04F6
D2	U3(4)	127F	CF72	H774
D3	U3(7)	7779	H37F	H37F
D4	U2(12)	5779	3269	3269
D5	U2(9)	163C	5HPU	5HPU
D6	U2(7)	87CH	0653	UUC5
D7	U2(4)	P227	P81H	831C

i. If these signatures are good, suspect buffers U2 and U3. If any of these signatures are bad, then perform the following to isolate the problem to a particular ROM.

U7 ROM Test:

START and STOP of 5004A to R3 test point on A14 extender board
CLOCK of 5004A to VMA•ϕ_2 test point on A14
START to (-) slope
STOP to (+) slope
CLOCK to (+) slope
GND of data probe to ground

A14S1 and A14S2 switches remain unchanged:

+5V — 826P

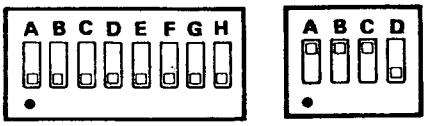

A14S1 A14S2

Signal Name	Location	Signatures (for ROM Combinations listed)		
		A14U1 (P/N 1818-0329) A14U1 (P/N 1818-0330) A14U7 (p/N 1818-0331)	A14U1 (1818-0698) A14U4 (1818-0697) A14U7 (1818-0331)	A14U1 (1818-0698) A14U4 (1818-0697) A14U7 (1818-0706)
DØ	U7(23)	F3PC	F3PC	HP87
D1	U7(22)	CA11	CA11	CA12
D2	U7(21)	52H7	52H7	52H4
D3	U7(20)	3UP5	3UP5	3UP5
D4	U7(19)	U9H1	U9H1	U9H1
D5	U7(18)	359F	359F	359F
D6	U7(17)	0FUC	0FUC	1197
D7	U7(16)	3PCF	3PCF	3PCU

U4 ROM test — change the START and STOP of the 5004A to the R2 test point on the A14 extender board. All other settings remain unchanged.

+5V — 826P

Table 8-9. A14 Microprocessor Troubleshooting (Continued)

U1 ROM test — change the START and STOP of the 5004A to the R1 test point on the A14 extender board. All other settings remain unchanged:

+5V — 826P

Signal Name	Location	Signatures (for ROM Combinations listed)		
		A14U1 (P/N 1818-0329) A14U4 (P/N 1818-0330) A14U7 (P/N 1818-0331)	A14U1 (1818-0698) A14U4 (1818-0697) A14U7 (1818-0331)	A14U1 (1818-0698) A14U4 (1818-0697) A14U7 (1818-0706)
DØ	U4(23)	FAA3	4P63	4P63
D1	U4(22)	9697	6HPH	6HPH
D2	U4(21)	UHU3	UHU3	UHU3
D3	U4(20)	A6A8	2268	2268
D4	U4(19)	196H	5U0A	5U0A
D5	U4(18)	24F6	7UHU	7UHU
D6	U4(17)	A956	1748	1748
D7	U4(16)	92F1	2FHF	2FHF

Signal Name	Location	Signatures (for ROM Combinations listed)		
		A14U1 (P/N 1818-0329) A14U4 (P/N 1818-0330) A14U7 (P/N 1818-0331)	A14U1 (1818-0698) A14U4 (1818-0697) A14U7 (1818-0331)	A14U1 (1818-0698) A14U4 (1818-0697) A14U7 (1818-0706)
DØ	U1(23)	6000	AAPC	AAPC
D1	U1(22)	6P3H	A4H6	A4H6
D2	U1(21)	HP60	706P	706P
D3	U1(20)	P686	05F2	05F2
D4	U1(19)	65P0	86A4	86A4
D5	U1(18)	A520	A520	A520
D6	U1(17)	P903	P903	P903
D7	U1(16)	H4UC	H4UC	H4UC

8. To check the read buffers, place A14 in free-run:

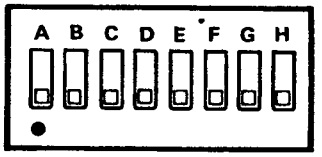

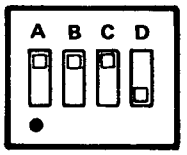

a. Set the LX ROM switch on the A14 extender board to the down position to disable ROM's U1, U4, U7. Ground U19(2) to halt the microprocessor.

b. With a logic pulser, pulse the read buffer inputs U2(3,6,10,13), U3(3,6,10,13) and verify no output pulse on U2(2,5,11,14) U3(2,5,11,14) otputs with a logic probe. Verify that the read buffer outputs U2(2,5,11,14) U3(2,5,11,14) all indicate an intermediate or high Z state (dim lamp). Place on AP clip on U3 and ground U3(1) to enable the read buffer. Now pulse the U2, U3 inputs with the logic pulser and verify with the logic probe that the U2, U3 outputs pulse.

NOTE

Return A14 switch settings to normal operation (see step 3).

9. It is possible for the MPU (U21) to freerun and still not operate properly. If trouble persists, replace U21.

Table 8-10. A19, A20, A21 Power Supply Troubleshooting

CAUTION

It is extremely dangerous to troubleshoot the A19 assembly of the power supply if an isolation transformer is not used. A19 is connected directly to the power main. Use an isolation transformer such as Allied Electronics P/N 705-0048 (for 120V ac) to isolate the instrument from the power main. The measurements in this troubleshooting procedure may be made only if an isolation transformer is used.

1. Connect 5342A power cord to isolation transformer.
2. The first step in power supply troubleshooting is to check the state of the green LED on A20 and the red LED on A21. If the green LED is on and the red LED is off, then the +5V(D) supply is working properly. If the red LED is on and the green LED is off, then one or more of the voltage outputs of A20, A21 may be drawing excessive current. Even if the green LED is on, one of the regulated outputs of A21 may be shut down due to excessive current. Check the following voltage levels:

SUPPLY	LOCATION	VALUE
-5.2V	XA15B($\overline{3}$)	-5.2(-0.1, +0.05)V*
+5V(D)	XA15B($\overline{4}$)	+5 (±0.1)V
+15V	XA15B($\overline{2}$)	+15 (±0.5)V
-15V	XA15B($\overline{1}$)	-15 (±0.5)V
+5V(A)	XA5($\overline{7}$)	+5 (±0.1)V
+12V oven	XA21($\overline{14}$)	+12 (±0.5)V
+12V	XA21(16, $\overline{16}$)	+12 (±0.5)V

*If this voltage is not correct, adjust A21R17 before making other voltage measurements.

NOTE

If one or more of the voltage outputs is at ground, then a probable cause is that one of the assemblies in the instrument connected to that voltage output has a short to ground. Remove assemblies connected to that voltage output, one at a time, until the short is removed. After removing an assembly, replace it in the instrument if that assembly is not the problem. This must be done because the power supply looses regulation if not run at approximately 75% of full load. The following table shows which assemblies are connected to the various supply voltages:

SUPPLY	FROM	TO
+5V(D)	XA20(18,$\overline{18}$)	A1, A2, A12, A13, A14, A15, A16, A17, A19
-5.2V	XA21(5,$\overline{5}$)	A3, A4, A5, A6, A7, A8, A9, A10, A11, A12, A13, A15, A16, A17, A25, A26
+15V	XA21(14)	A4, A6, A7, A8, A9, A10, A11, A12, A13, A15, A16, A17, A25
-15V	XA21(13)	A6, A7, A9, A10, A11, A12, A13, A15, A16, A17, A25
+5V(A)	XA21(1,$\overline{1}$)	A3, A4, A5, A6, A7, A8, A9, A10, A11, A12, A16, A18, A25, A26
+12V oven	XA21($\overline{14}$)	A24(8,$\overline{8}$)
+12V	XA21(16,$\overline{16}$)	A24(3)
+24V	XA21(11,$\overline{11}$)	A24(8,$\overline{8}$)

CAUTION

The waveforms in the following paragraph require using an isolation transformer as described in the CAUTION preceding step 1.

Table 8-10. A19, A20, A21 Power Supply Troubleshooting (Continued)

3. A21 Troubleshooting

   a. Pull A19 and A20 from the instrument and put A21 on an extender board. Plug the 5342A to the line but leave the ON/STBY switch in STBY. Measure the voltage at test lead TLS (labeled TLS 13.5V), which is the positive side of A21C20, and verify that this voltage is approximately 13.5 volts. If not, suspect rectifier A21CR2 or oven transformer T4.

   b. With the 5342A still in STBY, monitor test points TP2 and TP3 on A21 with an oscilloscope. Short TPJ and TPG (lower right corner TP on A21) together. Observe the following waveforms:

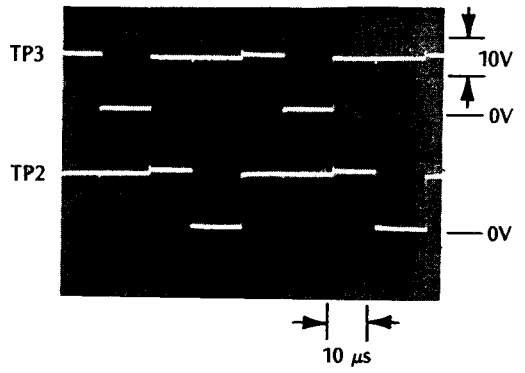

Now remove the short from TPJ to TPG and observe:

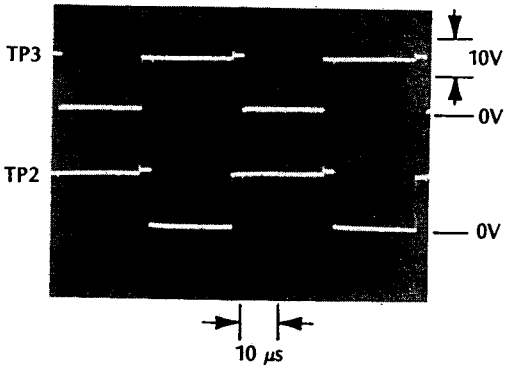

   c. Connect a clip lead to A21TP4 and momentarily ground the other end to the chassis. Observe red LED turn on for approximately 1-2 seconds and waveforms at TP2, TP3 go to a constant +13 volts for same duration. If not, suspect A21U3.

Table 8-10. A19, A20, A21 Power Supply Troubleshooting (Continued)

4. With A21 still on extender board (remove short from TPJ to TPG), insert A19 on an extender board into the instrument (A20 is still out of the instrument). Leave the 5342A line switch in STBY. The waveform at A19TP4 indicates that A19 transformers T1 and T2 are operating properly.

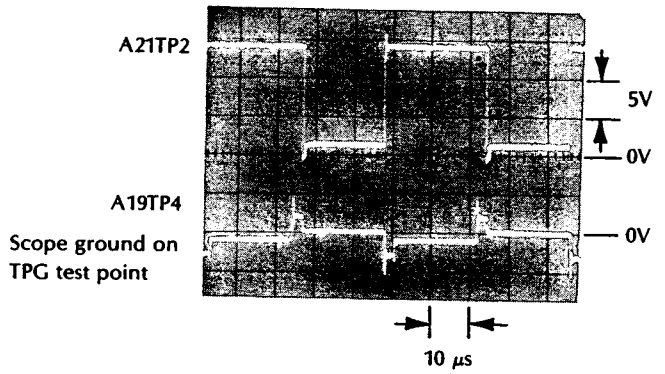

Now switch front panel line switch to ON and observe:

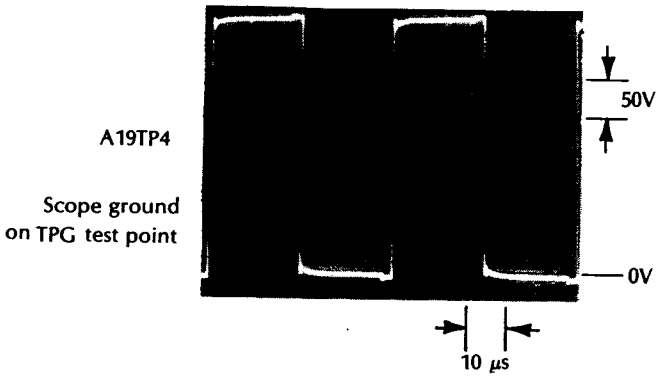

If the above waveform is not present, check the collector of A19Q1 for 300V (with respect to the test point TPG). If 300V dc is not present, suspect input rectifier A19CR1 and associated circuitry. If 300V dc is present, suspect open transistors Q1 and Q2.

Table 8-10. A19, A20, A21 Power Supply Troubleshooting (Continued)

5. Fabricate the following special test extender board shown below. This board is useful because, by placing a 1 KΩ load in series with the A20T1 transformer, the current drawn from transistors A19Q1, Q2 is limited. If A19Q1, Q2 have failed because of excessive current (due to a failure in the A21 overcurrent protection circuitry), then replacing A19Q1, Q2 and using the 1 KΩ load allows the power supply to be checked out without danger of blowing A19Q1, Q2 again.

   a. Take a 22-pin extender board (such as HP P/N 05342-60034) and cut the traces on pin 8 and $\bar{8}$ as shown below.

   b. Solder a 1 KΩ, 20W resistor (HP P/N 0819-0006) above and below the cut as shown:

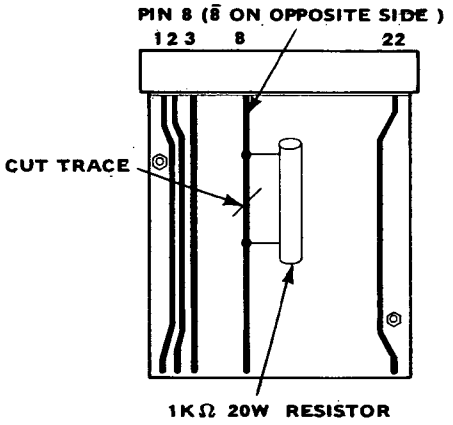

   c. Insert A20 in the above extender board into the instrument. Insert A21 (on standard HP P/N 05342-60034 extender board) into the instrument. Short A21TPJ to TPG (low right test point). Insert A19 on extender into instrument. Monitor A19TP4 with the scope probe ground on A19 TPG test point (emitter of Q2). If an isolation transformer is not used, do NOT make this measurement.

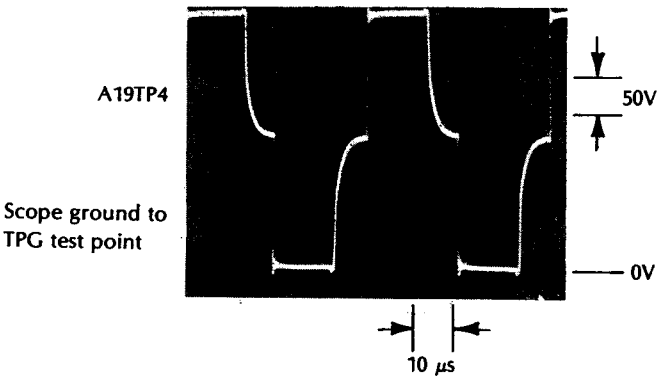

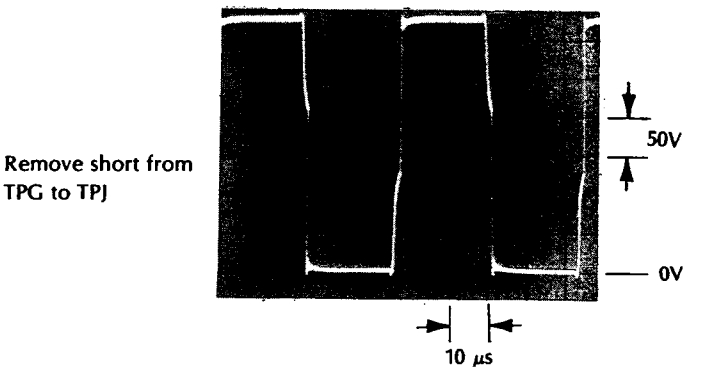

Table 8-10. A19, A20, A21 Power Supply Troubleshooting (Continued)

d. Remove special extender board and remove the short between A21TPJ and TPG. Insert A20 into XA20.

A19TP4
Scope ground on A19TPG

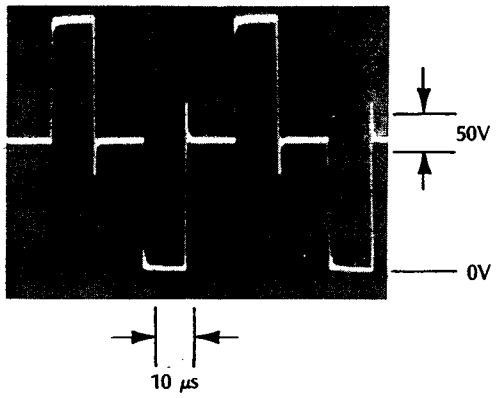

Green LED on A20 should be lit.

e. Now monitor A19TP5 and observe (adjust A19R1 for -1V on trailing edge):

TPJ
With Scope ground on test point TPG which is the emitter of A19Q2

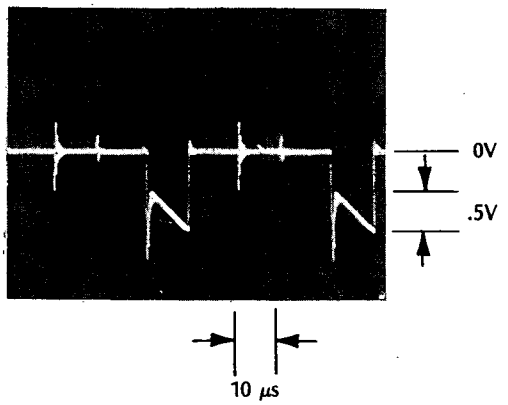

Table 8-11. A1, A2 Keyboard/Display Troubleshooting

TABLE 8-11
A1, A2

1. First verify that HDSPWRT at XA14B(10) pulses high when power is applied to the 5342A by using a logic probe such as the 545A. If not, troubleshoot A14 to obtain an HDSPWRT signal.

2. If HDSPWRT is present on the power up and pulses consistently thereafter but the display/keyboard still does not operate properly, remove the A1, A2 and front panel assembly as follows:

   a. Remove front panel sample rate knob with allen wrench.

   b. Remove BNC connector nut and type N connector nut.

   c. Pull off the two coax cables connected to A1J3 and A1J1.

   d. Remove the two chassis screws from each side strut holding the front panel to the strut.

   e. Pull off front panel assembly carefully.

   f. Remove 5 screws holding A1, A2 to front panel.

   g. Pull out A1, A2 which are sandwiched together by a center press-on connector.

   h. Make sure ribbon cable remains connected to A2.

3. Remove A14 from the 5342A chassis. With a clip lead, ground the following pins and observe the display for the following lighted LED segments:

   a.
A2U1(3)	all (b) segments and dBm light should light
A2U1(6)	all decimal points and blue key should light
A2U1(8)	all (d) segments, REM light, and MAN key should light
A2U1(11)	all (c) segments, GATE light, and OFS MHz key should light

   b.
A2U4(3)	all (g) segments and RECALL key should light
A2U4(6)	all (a) segments and FM light and AMPL key should light
A2U4(8)	all (e) segments and AUTO key should light
A2U4(11)	all (f) segments, SET key and OFS dB key should light

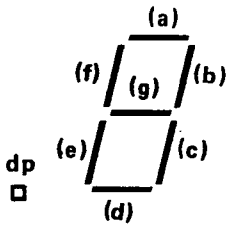

   c. If all segments light as specified, then the LED's A1DS11 through DS21 and the associated transistor drivers on A1 are operating properly. In addition, the scan clock comprised of A2U5, U3, U13, U6, and the column scanners A2U2, U7 are operating properly.

   d. If only one segment in the display lights, troubleshoot the scan clock and column scanners on A2.

Table 8-11. A1, A2 Keyboard/Display Troubleshooting (Continued)

4. If the 5342A does not perform the power up diagnostic but A1, A2 properly perform the test described in step 3, the probable cause of the failure is A2U11, U8 (TTL RAM memory), A2U16 (data bus buffer), A2U5, U13 (write enable generation), or U17 (multiplexer).

5. If the 5342A performs the power-up diagnostic but does not perform the diagnostic mode 8 keyboard check, the probable cause of the problem is the key decoding circuitry on A2 consisting of U13A, U5C, U18, U19, and U12. To test this circuitry, perform the following tests with A14 still removed from instrument:

   a. Monitor U10(8) with a logic probe and verify that each time a key is depressed, U10(8) goes low. To cause U10(8) to return to high, ground U22(1) momentarily. This verifies that pushing a key generates an interrupt request (LIRQ) and that reading the keyboard (LKBRD) clears the interrupt request.

   b. Place AP clip on U22 and monitor the outputs of latch U22 by grounding U22(1) and verify that when a key is pressed, the latch stores the following data:

KEY	U22(3)	(4)	(5)	(6)
0	0	0	0	0
1	1	0	0	0
2	0	1	0	0
3	1	1	0	0
4	0	0	1	0
5	1	0	1	0
6	0	1	1	0
7	1	1	1	0
8	0	0	0	1
9	1	0	0	1
•	0	1	0	1
ENTER	1	1	0	1

   c. Monitor U12(2) and verify that when any of the leftmost grouping of keys (AUTO, MAN, RESET, etc.) is pressed, U12(2) is high and that when any of the rightmost grouping of keys (0, 1, 2, etc.) is pressed, U12(2) is low. This verifies that the top/bottom row decoder U19A is operating properly.

   d. If the A2 assembly passes all the above, then the most probable cause of the problem is the A2U12 bus driver. Another possible cause is that the A14U2 MPU does not respond to the LIRQ signal.

Table 8-12. A3 Direct Count Amplifier Troubleshooting

To check that the direct count amplifier is working, connect the 10 MHz FREQ STD rear panel output to the direct count input (front panel BNC). Place the range switch in the 10 Hz—500 MHz range and the impedance select to 50Ω. Monitor TP1 of A3 for the following waveform (TP1 is the output of Schmitt Trigger U5).

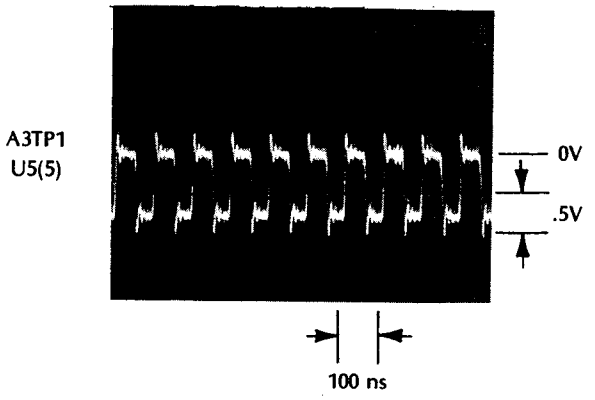

Table 8-12
A3

NOTE

Check that the output of A3, DIRECT B available at XA3($\overline{1}$), is divided by four and that DIRECT A available at XA3(2) is divided by two.

Table 8-13. A13 Counter Troubleshooting

1. Apply approximately 50 MHz signal at -10 dBm to the high frequency input of the 5342A. Put the counter in diagnostic mode 2 (press SET, SET, 2) to read the contents of the A counter. The A counter should read approximately 8,200,000. Put the 5342A in diagnostic mode 3 to read the B counter. It should be the **same** reading as A, ±1 count (provided the stability of the 50 MHz source is that good). If this is true, then A13 is good. If it is not true, A13 may be at fault (as well as A17 for the prs generation and gate time generation).

2. Check the inputs to the A counter as follows: Apply 10 MHz FREQ STD OUT on rear panel to the direct count input (fron panel BNC) with 50Ω position selected. Check the following A counter test points (since 10 MHz is divided by four on A3, TP6 which divides A3 output by 2, should have a period of 8x100 ns = 800 ns and TP7, which divides A3 output by four should have a period of 16x100 ns = 1.6 μs):

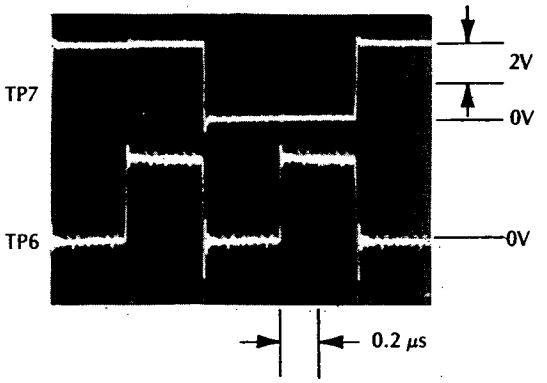

3. Check the inputs to the B counter as follows: Apply a 50 MHz, -10 dBm signal to the high frequency input and select the 500 MHz—18 GHz range. Put the 5342A in AUTO and push RESET to cause the counter to go to the prs generation, thus enabling the B counter. Place the rear panel FM switch to the FM position so that the B counter is enabled for 2.1 seconds.

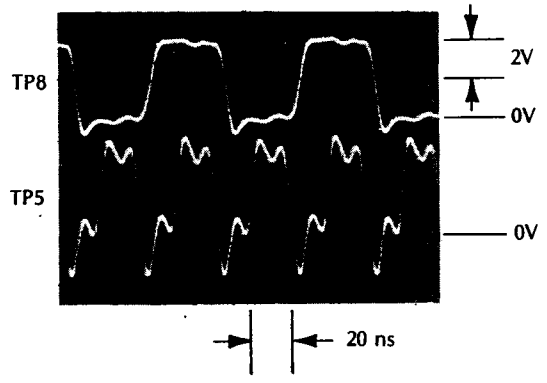

Table 8-13. A13 Counter Troubleshooting (Continued)

4. Test the outputs of U1 and U2 for activity by applying a 50 MHz, -10 dBm signal to the high frequency input. Place the counter in AUTO, 500 MHz—18 GHz range, and diagnostic mode 2 so that the prs is continually generated. Monitor TP2 and TP3 with an oscilloscope. If the signals appears much different than the waveform shown below, one or more of the U3 buffers have probably failed. Use a logic pulser and logic probe to check out the U3, U7 buffers. An HP 1607A Logic State Analyzer may be used to check out the actual data going back to the microprocessor as shown in step 5.

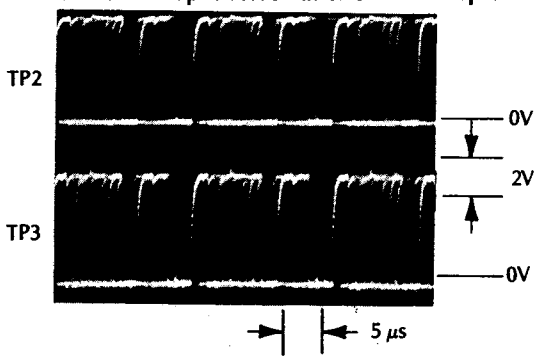

TABLE 8-13 A13

When the counter is not in diagnostic mode 2 but is just measuring the 50 MHz signal, the waveform below shows activity at the A counter (counting the IF) but none at the B counter.

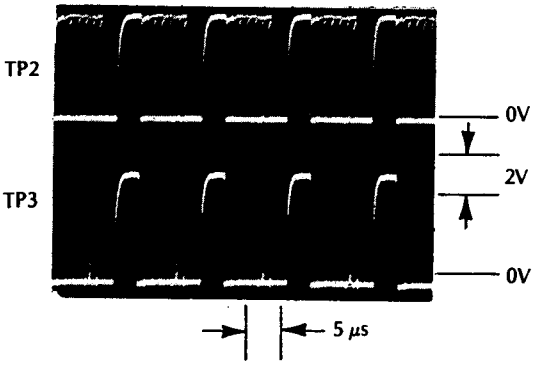

5. 1607A check out of A13

   a. Put A13 on extender board and put AP clips on A13U3, U5, U8, and U10. Connect the following 1607 data bit lines as follows:

1607 Data Inputs	A13 Connections	Description
Data bit 0	U3(8)	AØ line
1	U3(10)	A1 line
2	U3(12)	A2 line
3	U5(14)	A3 line
4	U5(2)	A4 line
5	U8(1)	A5 line
•GND	U3(7)	GND
6	U8(12)	LCTR RD
7	U5(7)	DØ
8	U5(9)	D1
9	U10(7)	D2
10	U10(9)	D3
11	NOT USED	
•GND	U5(8)	GND
CLOCK	$\overline{VMA}$•ϕ_2 TP on A14	
•GND	U10(8)	

   b. Set 1607A to repetitive, Table A, word trigger, delay off and start display. Put bits 15–7 in the OFF (don't care) position. Place the 5342A in CHECK mode and 1 MHz resolution. Select each of the following trigger words (EXAMPLES 1, 2, and 3) and verify the proper 1607A display in the don't card bits of the trigger word.

Example 1: CHECK Mode — 1 MHz Resolution

COMMENTS	OFF DATA BITS SHOULD BE: 10	9	8	7	TRIGGER WORD (DATA BITS) 6	5	4	3	2	1	0
*These two bits ignored in CHECK since they represent state of dividers on A3. This reads out least significant counts. In this case we're reading state of divider U12B (bit 9) and divider U16B (bit 10). Count equals 3 in this case.	1	1	*	*	0	1	0	0	0	0	0
Bit 7 = U17(5) output Bit 8 = U17(9) output Bit 9 = U17(2) Bit 10 = U17(12) Count = 8 in this case.	1	0	0	0	0	1	0	1	0	0	0
Bit 7 = U13(5) output Bit 8 = U13(9) output Bit 9 = U13(2) output Bit 10 = U13(12) Count = 1 in this case.	0	0	0	1	0	1	1	0	0	0	0
Bit 7 = U1(15) 10^0 decade Bit 8 = U1(16) 10^0 decade Bit 9 = U1(1) 10^0 decade Bit 10 = U1(2) 10^0 decade Count = 0	0	0	0	0	0	1	1	1	0	0	0
Bit 7 = U1(15) 10^1 decade Bit 8 = U1(16) 10^1 decade Bit 9 = U1(1) 10^1 decade Bit 10 = U1(2) Count = 0	0	0	0	0	0	1	1	1	0	0	1
Bit 7 = U1(15) 10^2 decade Bit 8 = U1(16) 10^2 decade Bit 9 = U1(1) 10^2 decade Bit 10 = U1(2) 10^2 decade Count = 0	0	0	0	0	0	1	1	1	0	1	0
Bit 7 = U1(15) 10^3 decade Bit 8 = U1(16) 10^3 decade Bit 9 = U1(1) 10^3 decade Bit 10 = U1(2) 10^3 decade Count = 0	0	0	0	0	0	1	1	1	0	1	1
Bit 7 = U1(15) 10^4 decade Bit 8 = U1(16) 10^4 decade Bit 9 = U1(1) 10^4 decade Bit 10 = U1(2) 10^4 decade Count = 0	0	0	0	0	0	1	1	1	1	0	0
Bit 7 = U1(15) 10^5 decade Bit 8 = U1(16) 10^5 decade Bit 9 = U1(1) 10^5 decade Bit 10 = U1(2) 10^5 decade Count = 0	0	0	0	0	0	1	1	1	1	0	1

Total Count = 3+4(8+10) = 75 counts
(Count display 75 MHz)

Multiply all the counts after the 1st by 4 since the input to the decade counters has essentially been prescaled by 4.

Example 2: CHECK Mode — 100 Hz Resolution

COMMENTS	OFF DATA BITS SHOULD BE:				TRIGGER WORD (DATA BITS)						
	10	9	8	7	6	5	4	3	2	1	0
Count = 0	0	0	*	*	0	1	0	0	0	0	0
Count = 0	0	0	0	0	0	1	0	1	0	0	0
Count = 0	0	0	0	0	0	1	1	0	0	0	0
Count = 5	0	1	0	1	0	1	1	1	0	0	0
Count = 7	0	1	1	1	0	1	1	1	0	0	1
Count = 8	1	0	0	0	0	1	1	1	0	1	0
Count = 1	0	0	0	1	0	1	1	1	0	1	1
Count = 0	0	0	0	0	0	1	1	1	1	0	0
Count = 0	0	0	0	0	0	1	1	1	1	0	1

Total Count = 4(187500) +0 = 750,000 = Display of 75.0000 MHz

Example 3: Apply 10 MHz from EXT FREQ STD OUT to 10 Hz—500 MHz input and select the direct count range with 1 Hz resolution

COMMENTS	OFF DATA BITS SHOULD BE:				TRIGGER WORD (DATA BITS)						
	10	9	8	7	6	5	4	3	2	1	0
Count = 0	0	0	0	0	0	1	0	0	0	0	0
Count = 0	0	0	0	0	0	1	0	1	0	0	0
Count = 0	0	0	0	0	0	1	1	0	0	0	0
Count = 0	0	0	0	0	0	1	1	1	0	0	0
Count = 5	0	1	0	1	0	1	1	1	0	0	1
Count = 2	0	0	1	0	0	1	1	1	0	1	0
Count = 6	0	1	1	0	0	1	1	1	0	1	1
Count = 0	0	0	0	0	0	1	1	1	1	0	0
Count = 0	0	0	0	0	0	1	1	1	1	0	1

In the direct count mode, because of the divide-by-4 on A3, the output of the decade dividers must be multiplied by 16 instead of 4. So total count is 16 (625,000) + 0 = 10,000,000 and is displayed as 10.000000 MHz.

To check the B counter, the same set-up may be used but Bit 5 in the Trigger word must be a zero. Put the counter in diagnostic mode 3 with a 50 MHz, -10 dBm signal applied to the high frequency input. Observe that a reading of around 8,200,000 is output for 1 Hz resolution.

Table 8-14. A17 Timing Generator Troubleshooting

1. The A17 Timing Generator has a number of outputs:
   a. LO SWITCH at XA17($\overline{1}$) which switches the A5 multiplexer and A13 counters in a pseudorandom sequence after acquisition.
   b. LDIR GATE at XA17($\overline{4}$) which gates the main gate on A3 for direct count measurements.
   c. LIF GATE at XA17($\overline{5}$) which gates counter A on A13 for measuring the IF.
   d. CLOCK at XA17(4) which drives A14.
   e. When A17 is read by the microprocessor, the D4 line is examined to see if the gate time is over. The D1 line indicates the end of the prs. The D2 line indicates the end of the sample rate run down.

2. LO SWITCH verification. To verify that the LO SWITCH signal is operating properly, the 5342A must be able to acquire so that the counter can be forced into its harmonic determination routine. This means that A25, U1, A11, A12 must be working properly. To check LO SWITCH, apply a 50 MHz signal, -10 dBm, to the high frequency connector and put the 5342A in the 500 MHz—18 GHz range. The LO SWITCH signal at XA5($\overline{5}$) should appear:

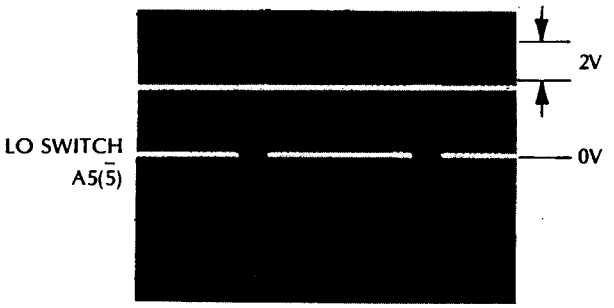

The time during which the signal switches between high and low levels in a pseudorandom fashion should be 360 ms. The time where the signal is high and not switching is controlled by the front panel sample rate control and resolution of counter. If the rear panel switch is placed in the FM position, then the time during which the signal is switching should extend to 2.1 seconds (actually 2.096).

A sample of what the sequence looks like is shown below where the sweep speed of the scope has been increased to 100 μs:

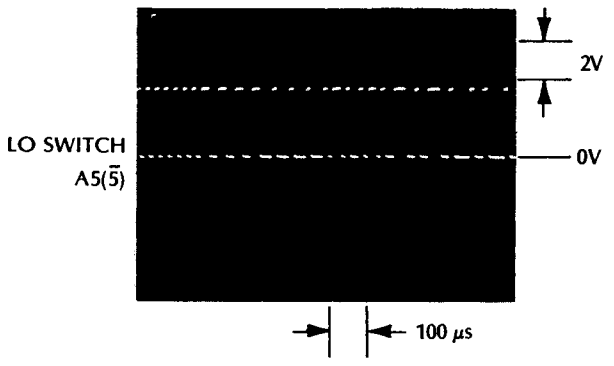

If LO SWITCH is stuck low, then the 5342A will not acquire even if all the IF circuitry is working properly. This is due to the fact that during acquisition, a 1 μs measurement is made on the IF and this requires that LO SWITCH go high to select the A counter on A13. This measurement is made to insure that the IF is in the proper frequency range. The above troubleshooting procedure will not work in this case since diagnostic mode 3 can not be entered. This condition would be evidenced by the counter displaying SP2 in diagnostic mode 0.

TABLE 8-14
A17

Table 8-14. A17 Timing Generator Troubleshooting (Continued)

IF LO SWITCH is not present, check the TP5 test point on A17 to see if the prs generator is working. Put the counter in diagnostic mode 2 for continual prs generation. TP5 is high during the prs and should remain high for 360 ms (normal or CW mode on rear panel) or for 2.096 seconds (FM mode).

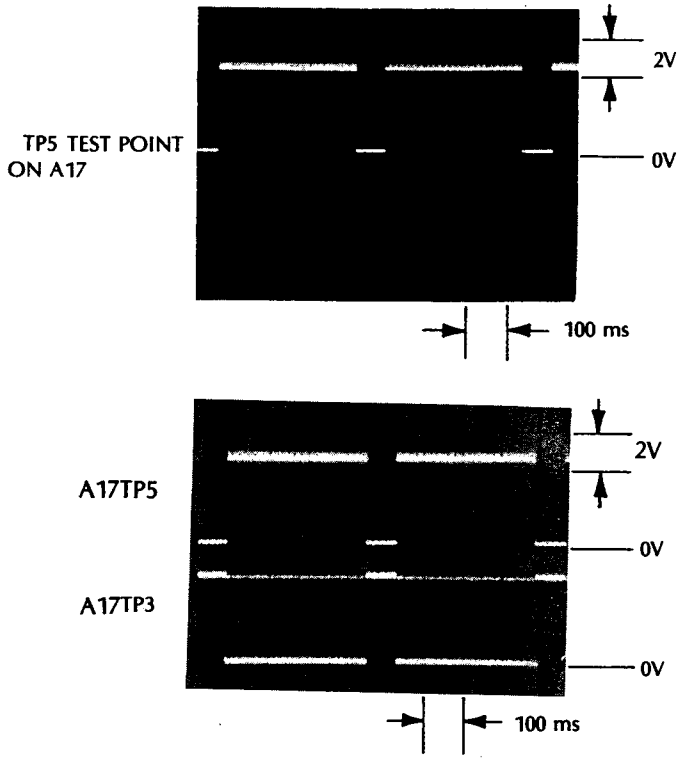

TABLE 8-14
A17

3. Troubleshooting the A17 prs generator.

To troubleshoot the prs generator on A17 (consisting of A17U7, U4, U5, U2, U1, and various gates), pull the A18 time base buffer board from the instrument to disable the 1 MHz clock into A17. Put A17 on an extender board, connect logic probe and logic pulser power leads to A17 +5V and ground, and perform as follows:

a. U7, U4, U5 SHIFT REGISTER CHECK

1) Put AP clip on U3 and connect clip lead from U3(9) to ground. Verify that U5(1) is high. Clear U7, U4, U5 by applying 1 pulse with logic pulser to TP5 test point. Monitor U5(9) with logic probe to see that the clear input pulses low (if clear input powers up low, then apply a pulse to U19(9) then to U14(2) to cause the clear input to go high).

2) Apply logic pulser to TP4 test point and monitor the shift register outputs.

After 1 pulse at TP4, U5(3) should go from low to high.

Apply 2 more pulses at TP4, U5(5) should go from low to high.

Apply 12 more pulses at TP4, U4(12) should go from low to high.

Apply 5 more pulses at TP4, U7(6) should go from low to high.

b. U2, U1 Counters Check

1) Connect AP clip to U3. Connect clip lead from U3(1) to ground.

2) Verify that U1(1) is high. If not, pulse U19(9), then U14(2) with logic pulser. Verify that U2(3) is high and U2(5) is low. If not, pulse U19(9).

3) Connect another clip lead from U3(5) to ground. Verify that U1(9) is low. Move clip lead from U3(5) to U3(6) so that U3(6) is grounded. Verify that U1(9) is high. This loads data into U1 and U2 counters.

4) Monitor U1(15) with logic probe and pulse TP4 test point with pulser 14 times. ON 14th clock, U1(15) should pulse high.

Table 8-14. A17 Timing Generator Troubleshooting (Continued)

4. A17 LDIR GATE and LIF GATE troubleshooting.

   a. Set the 5342A to 10 Hz—500 MHz range, sample rate full ccw, no input signal, and 100 Hz resolution. With an oscilloscope, monitor LDIR GATE at XA3(5) and TP6 on A17 as shown below:

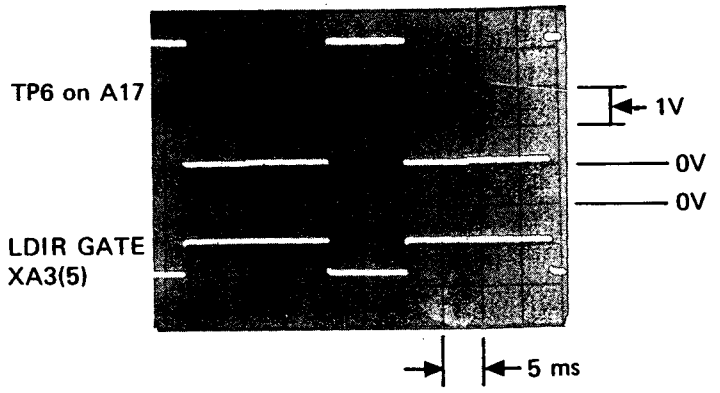

   b. As the resolution is changed, the width of the gate signal (TP6 high) should vary as follows:

Resolution	Width
1 MHz	1 μs
100 kHz	10 μs
10 kHz	100 μs
1 kHz	1 ms
100 Hz	10 ms
10 Hz	100 ms
1 Hz	1 sec

   c. Change the range of the 5342A to the 500 MHz—18 GHz range and place the counter in MAN mode and observe:

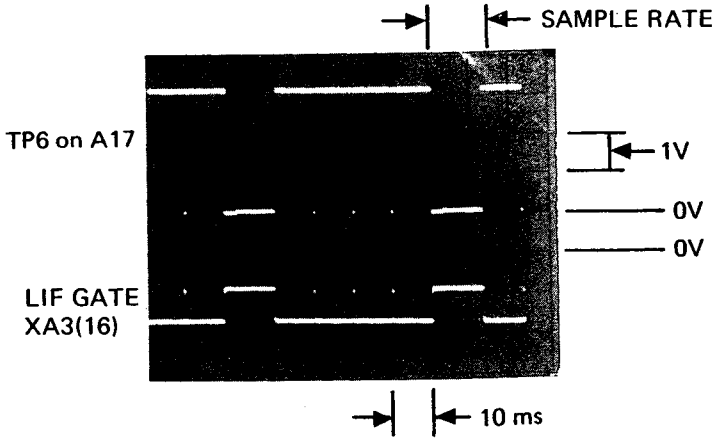

   d. As the resolution is change, the width of the gate signal should vary as follows:

Resolution	Width
1 MHz	10 μs
100 kHz	Four 10 μs width pulses, 100 μs between each
10 kHz	Four 100 μs width pulses, 100 μs between each
1 kHz	Four 1 ms width pulses, 100 μs between each
100 Hz	Four 10 ms width pulses, 100 μs between each
10 Hz	Four 100 ms width pulses, 100 μs between each
1 Hz	1 sec

   For resolutions from 100 kHz to 10 Hz, each gate time consists of four gate signals separated by 100 μs dead time.

Table 8-14. A17 Timing Generator Troubleshooting (Continued)

5. IF LDIR GATE or LIF GATE signals are not present, place A17 on an extender board and monitor A17U16(1), the output of the A16 time base generator. Place the 5342A in 10 Hz—500 MHz range, sample rate full ccw, and 1 kHz resolution and observe:

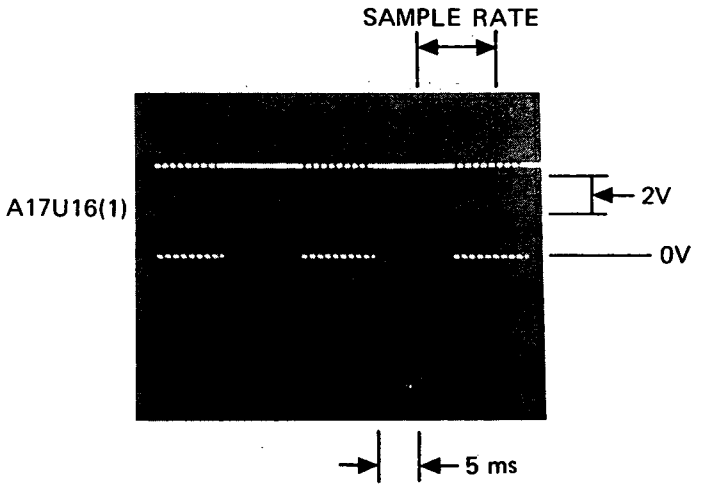

Only the first period of the U16(11) output is used to generate the LDIR GATE is used to generate the LDIR GATE signal as shown below:

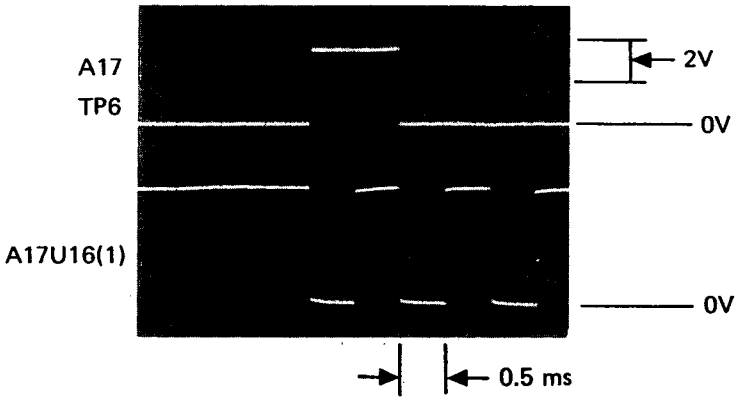

Table 8-15. A8, A9, A10 Main Loop Synthesizer Troubleshooting

1. To test if the A9 Main Loop Amplifier and A10 Divide-by-N are operating properly, put the 5342A in AUTO and select the 500 MHz—18 GHz range. Disconnect any input signal. In diagnostic mode zero (press SET, SET, 0), the counter should display SP, indicating that it is sweeping the synthesizers. The MAIN CNTRL signal, measured at XA8($\overline{1}$), should look like:

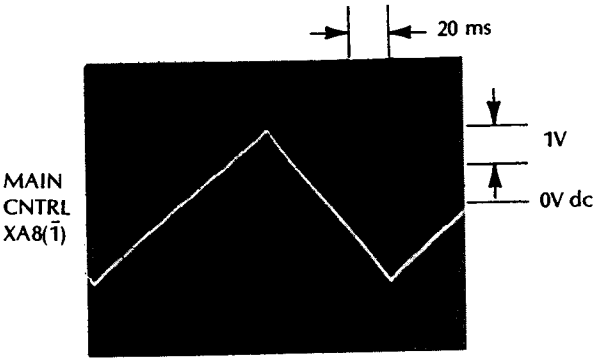

The sweep up time is approximately 90 ms while the sweep down time is 60 ms. If this signal is present, then A9, A10, and part of A8 as well as the ROM program on A14, are operating properly.

2. To test if the A8 Main VCO is operating properly, put the 5342A in MANUAL mode, 500 MHz—18 GHz range and set the MANUAL center frequency to the values in the following table. Connect a coax cable, with BNC connector on one end and alligator clips on the other, from XA5(10) to the 5342A direct count input (front panel BNC). XA5(10) is the Main OSC signal and will be measured by the 5342A if the range switch is changed to the 10 Hz—500 MHz range (impedance select should be in 50Ω). To change MANUAL center frequency, place the range switch back in the 500 MHz—18 GHz position and SET MAN. Verify that the counter measures the proper MAIN OSC frequency for each of the MANUAL center frequencies selected.

MAN CENTER FREQ	MAIN OSC FREQ
500 MHz	300.0 MHz
550 MHz	312.5 MHz
600 MHz	337.5 MHz
650 MHz	350.0 MHz

Also test the output level of the A8 outputs. Using an RF Millivoltmeter with a high Z probe, the following A8 output levels should be measured (±100 mV):

XA8(7)	MAIN OSC	500 mV rms
XA8(3)	MAIN VCO	250 mV rms
XA8($\overline{5}$)	DIV N	250 mV rms

These levels are essentially independent of frequency.

If steps 1 and 2 pass the test, then the Main Loop Synthesizer is working properly. If not, proceed to step 3.

3. A8 FREE RUN FREQUENCY CHECK. Connect XA5($\overline{10}$), the MAIN OSC signal, to the direct count input (front panel BNC), of the 5342A. Use a coax cable, BNC on one end and alligator clips on the other. With a jumper, short MAIN CNTRL, A9TP1, to ground. The 5342A should read approximately 325 MHz (±2 MHz). If not, adjust A8R22. If no signal is present, repair A8. (Test all of the A8 outputs for a signal.)

TABLE 8-15
A8, A9, A10

Table 8-15. A8, A9, A10 Main Loop Synthesizer Troubleshooting (Continued)

4. Troubleshooting A9 and A10.

Put A10 on an extender board and put an AP clip on A10U2. Connect scopes probes to U2(5) which is MAIN $\Delta\phi_1$ and U2(10) which is MAIN $\Delta\phi_2$. Ground TP1 on A9 with a clip lead. This causes the A8 VCO to go to its free run frequency of 325 MHz. Put the 5342A in AUTO, 500 MHz—18 GHz range, and no input. This causes the 5342A to sweep the synthesizers. Verify that the U2 phase detector outputs appear as follows:

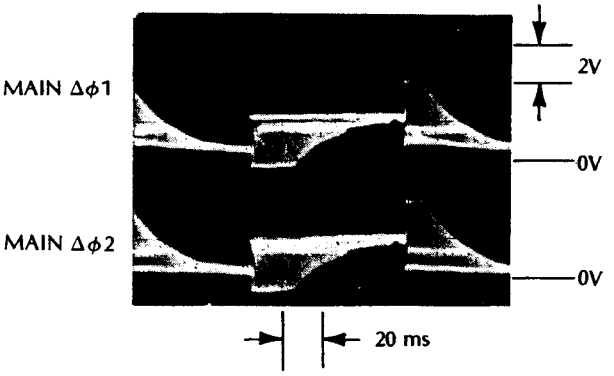

If these signals are not present, then either the divide-by-N or the phase detector on A10 is faulty. If this signal is present but there is no MAIN CNTRL sweep signal at XA8($\overline{1}$) as in step 1, then A9 is faulty.

BLE 8-15
A9, A10

5. The following test determines if the divide-by-N is faulty:

With the Main Synthesizer loop working properly, the signal at A10TP1 is a 50 kHz signal as shown:

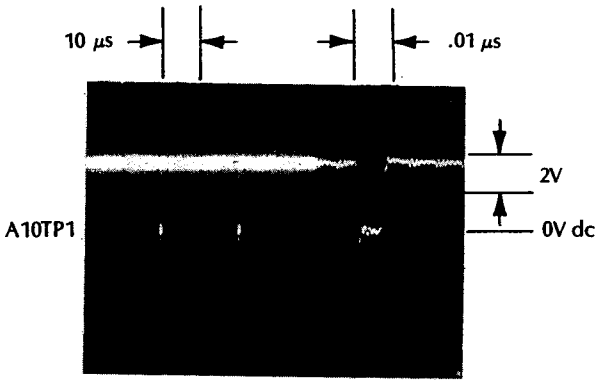

MIXED SCOPE DISPLAY

Table 8-15. A8, A9, A10 Main Loop Synthesizer Troubleshooting (Continued)

Ground A9TP1 so that A8 will go to its free run frequency of 325 MHz. Put the 5342A in MANUAL mode and set the following center frequencies. Monitor A10TP1 and check the period of this signal. It should vary per the table below since the 325 MHz free run frequency is divided by the programmed N.

MAN CNTRL FREQ	DESIRED VCO FREQ (frequency A8 would go to if A9TP1 not grounded)	DIVISION FACTOR N	A10TP1 PERIOD (if free run = 325.0 MHz)
500 MHz	300.0 MHz	6000	18.46 μs
550 MHz	312.5 MHz	6250	19.23 μs
600 MHz	337.5 MHz	6750	20.77 μs
650 MHz	350.0 MHz	7000	21.54 μs

For example:

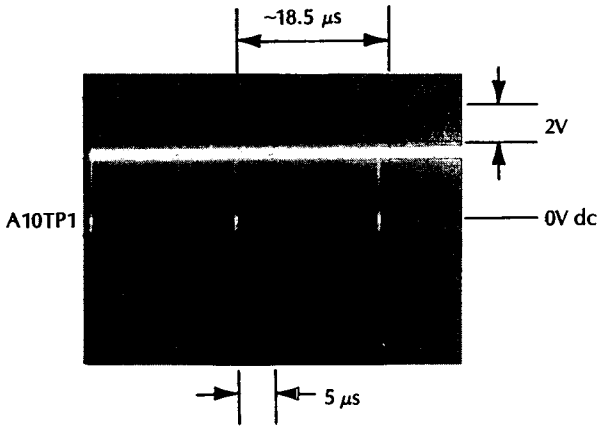

If the MAN CNTRL FREQ is changed to 600 MHz, then the period of A10TP1 changes:

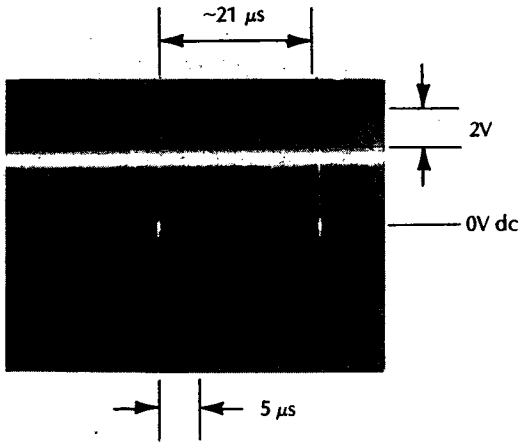

If this doesn't occur, then the divide-by-N circuitry on A10 is faulty.

Table 8-16. A11, A12, A25, U1 IF Troubleshooting

1. Set up signal generator at 50 MHz to deliver 0.6V p-p into 50Ω as measured on an oscilloscope with 100 MHz bandwidth.

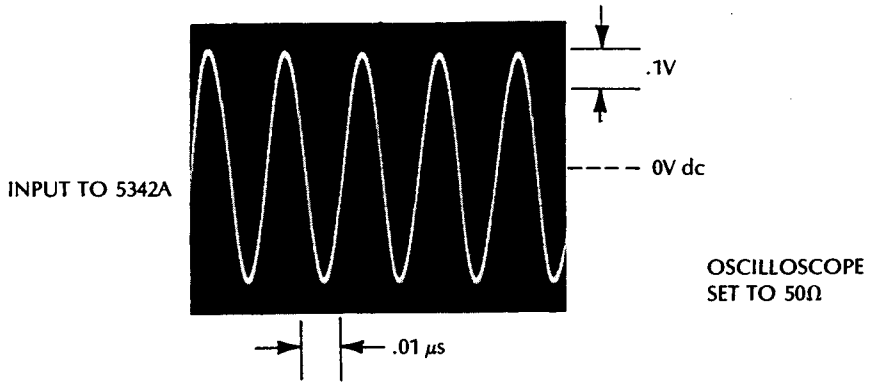

NOTE

In the following step, for instruments containing Option 002 or 003, inject the 50 MHz test signal at the U1 Sampler Input. This requires removal of the semirigid coax cable from U1 input. This action is necessary due to the filter in U2 at the 500 MHz—18 GHz input.

BLE 8-16
, A12, A25

2. Apply the 50 MHz signal generator output to the 500 MHz—18 GHz input of the 5342A. Place the 5342A in AUTO and the range switch in the 500 MHz—18 GHz position.

   The IF OUT on the rear panel of the 5342A should appear as follows:

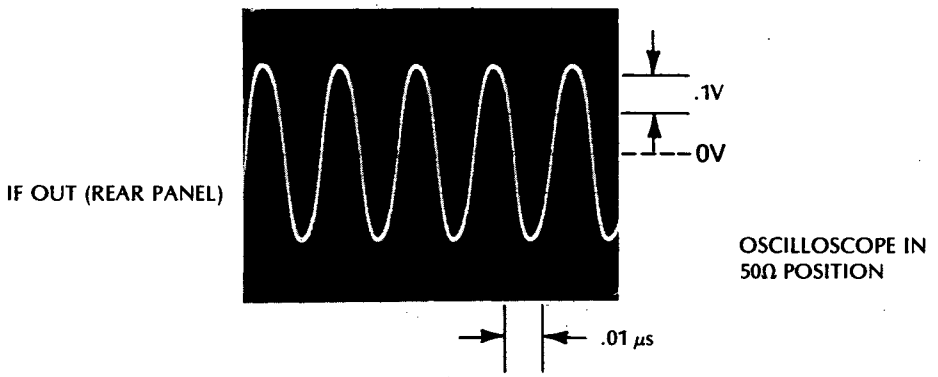

   If this output is as shown above, go to step 3.

   a. If this output is not present, then either the U1 Sampler or the A25 Preamplifier has failed. Check the A25 Preamplifier by checking the dc voltages on the active components as given on the apron of the A25 schematic.

Table 8-16. A11, A12, A25, U1 IF Troubleshooting (Continued)

b. The U1 Sampler may be checked for continuity (does not guarantee proper operation across the frequency range, however) in the following manner:

1) Remove U1 sampler. (Refer to *Table 8-18*).

2) Measure the following resistance values on an ohmmeter set to the 1 KΩ resistance range (1 mA constant current). Different values are obtained if the current is different than 1 mA.

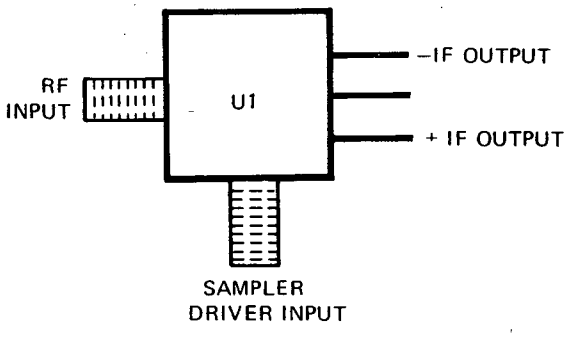

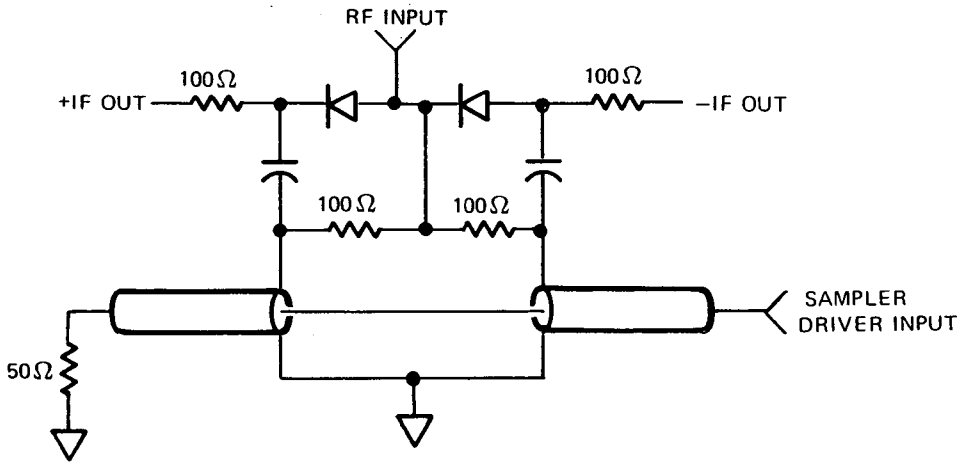

- Measure from the RF Input to + IF OUT, both forward and reverse bias. Ohmmeter should read ≈570Ω forward bias, ∞ for reverse bias.
- Measure from the RF Input to – IF OUT, both forward and reverse bias. Ohmmeter should read ≈570Ω forward bias, ∞ for reverse bias.
- Measure from the RF Input to ground. Ohmmeter should read 50 ±5Ω.
- Measure from sampler driver input to ground. Ohmmeter should read 50 ±5Ω.

TABLE 8-1
A11, A12, A2

Table 8-16. A11, A12, A25, U1 IF Troubleshooting (Continued)

3. Check the IF signal at XA11($\overline{1}$) using a 10 MΩ/10 pF oscilloscope probe. Signal should appear as follows:

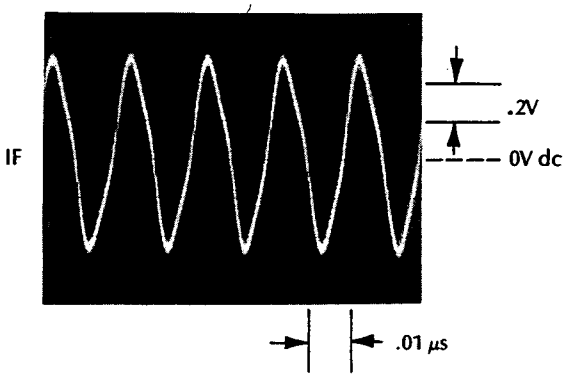

If this signal is not present, suspect A25.

4. Check the IF LIM signal at XA11($\overline{12}$) with 10 MΩ/10 pF oscilloscope probe. Signal should appear as shown:

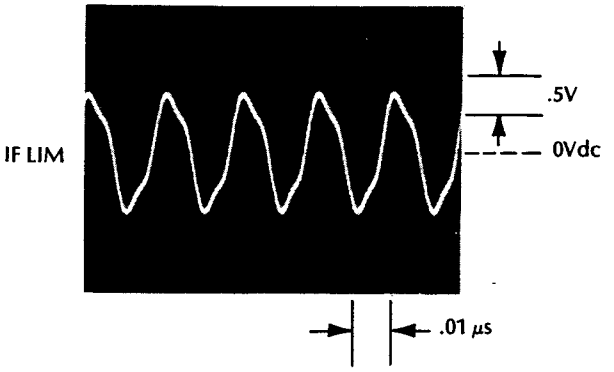

If this signal is not present, suspect A11.

5. Check the IF COUNT signal at XA12($\overline{8}$) with 10 MΩ/10 pF scope probe. Signal should appear as shown:

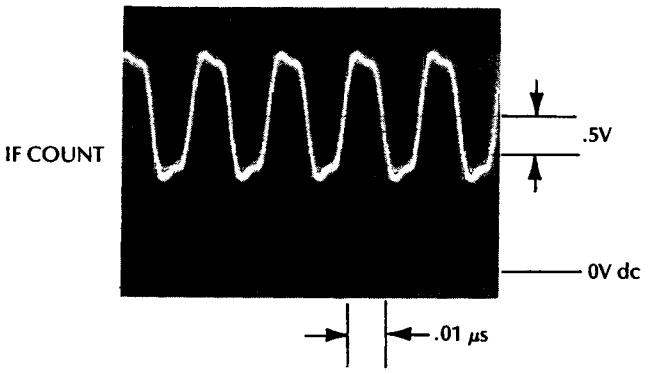

If this signal is not present, suspect amplifiers U2 and/or U4 on A12.

Table 8-16. A11, A12, A25, U1 IF Troubleshooting (Continued)

6. Testing A12 IF Detectors

Put the A121F detector on an extender board. Monitor TP8 (48—102 MHz detector) and TP9 (22—128 MHz detector) with a logic probe. Put the 5342A in AUTO and the 500 MHz—18 GHz range. Apply a 20 MHz 0 dBm signal to the high frequency input. Note that both TP8 and TP9 are low. Increase the input frequency to 22 MHz and notice that the logic probe indicates a high at TP9 (near the limits of the detectors, the logic probe will blink high). Increase the input frequency to 48 MHz and check that TP8 goes high. As the frequency is increased to 102 MHz, both TP8 and TP9 should be high. As the frequency is increased beyond 102 MHz, TP8 should go low and TP9 should remain high until 128 MHz is reached, at which TP9 also goes low. If these test points are correct the detectors operate properly. If the detectors do not operate, go to step 7.

If the detectors operate as above but if the counter is in AUTO with a 50 MHz signal applied to its high frequency input and if, after placing the counter in diagnostic mode 0, the counter displays SP or SP2 only, the most probable cause is that the U12 output gates which drive the data bus are bad or else LPDRD is not being sent by the MPU. Use a logic pulser to pulse LPDRD and check the bus driver outputs with a logic probe. Also use a pulser to pulse LPDWRT to see if that sets the U7 latch to the low state (monitor TP10).

7. Troubleshooting 48—102 MHz Detector on A12. With a dual trace oscilloscope, monitor TP5 (48—102 MHz detector) and TP4 (transfer signal) on A12 under the following conditions. Check that the correct display is obtained. (Put A12 on extender board 05342-60034).

a. Apply a 45 MHz signal at 0.6V p-p to the 500 MHz—18 GHz input of the 5342A.

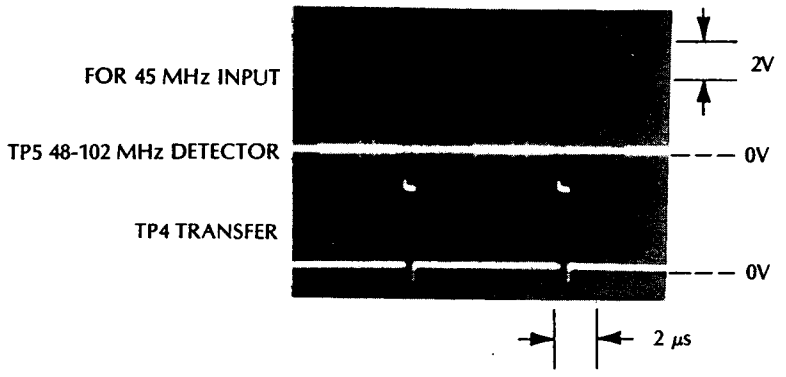

b. Increase the frequency to 48 MHz. The following display should be observed:

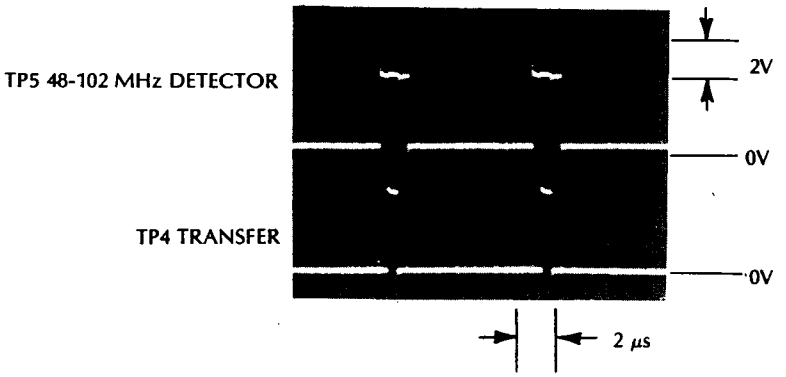

Table 8-16. A11, A12, A25, U1 IF Troubleshooting (Continued)

c. Increase the frequency from 48 to 102 MHz. Over the entire frequency range, the transfer pulse (TP4) should occur inside the detector pulse (TP5). The transfer pulse clocks the state of the detectors into U13 on A12.

d. Increase the frequency beyond 102 MHz to obtain the following display:

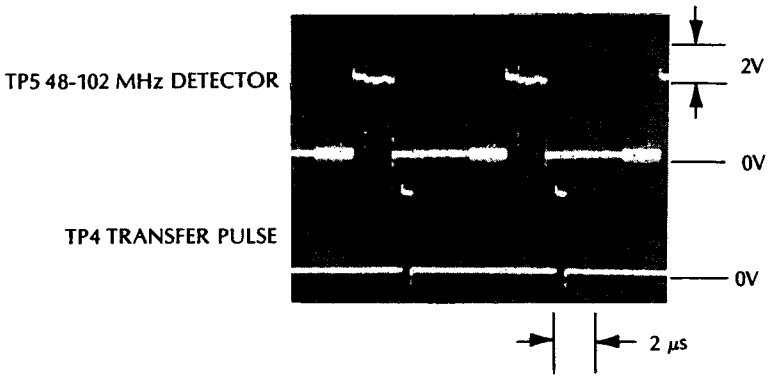

Transfer pulse occurs outside the detector pulse so that a low is transferred into U13.

e. Similar waveforms occur for the 22—128 MHz detector with different frequency limits.

f. Using the 5004A Signature Analyzer, troubleshoot the frequency detectors on A12.

Put A12 on an extender board and an AP clip on A12U15. Place the START probe and STOP probe of the 5004A Signature Analyzer on U15(12) which is the Q_D output. Place the CLOCK probe of the 5004A on U15(8) which is the 1 MHz input to A12. Place the GROUND probe on U15(7).

Place the CLOCK, START, and STOP switches on the 5004A to positive slope (buttons out).

Connect the 10 MHz FREQ STD output on the rear panel of the 5342A to the high frequency input of the 5342A.

Table 8-16. A11, A12, A25, U1 IF Troubleshooting (Continued)

Place the data probe on +5V to see if characteristic 1's signature of UP73 is obtained. If not, replace U15. CHECK the signature at U6(3) to see if the 10 MHz signal is entering the digital filter properly. This signature should be 55H1. Check U6 signatures and work back along the incorrect signature signal path.

U6(1) A1C9	U5(1) UP73	U8(1) 0000	U9(1) 0000
U6(2) 0U16	U5(2) 6097	U8(2) 0000	U9(2) 1F2C
U6(3) 55H1	U5(3) NA	U8(3) HP01	U9(3) 0000
U6(4) P258	U5(4) NA	U8(4) P258	U9(4) 6097
U6(5) 1F2C	U5(5) 9HP0	U8(5) 0000	U9(5) 2F60
U6(6) 0000	U5(6) 9HP0	U8(6) UP73	U9(6) UP73
U6(7) 0000	U5(7) 0000	U8(7) 0000	U9(7) 0000
U6(8) 0000	U5(8) A1C9	U8(8) UP73*	U9(8) 0000*
U6(9) UP73	U5(9) 2F60	U8(9) UP73	U9(9) UP73
U6(10) 0000	U5(10) NA	U8(10) 0000	U9(10) UP73
U6(11) 0000	U5(11) NA	U8(11) 0000	U9(11) 0000
U6(12) UP73	U5(12) 1F2C	U8(12) UP73	U9(12) 0000
U6(13) 0000	U5(13) UP73*	U8(13) 0000	U9(13) UP73
U6(14) UP73	U5(14) UP73	U8(14) UP73	U9(14) UP73

U10(1) UP73	U11(1) UP73	U7(1) 6097	U14(1) 0U16
U10(2) 0000	U11(2) 0000	U7(2) 2F60	U14(2) 55H1
U10(3) NA	U11(3) 0000	U7(3) HP01	U14(3) 0000*
U10(4) NA	U11(4) UP73		U14(4) FH3F
U10(5) 0000	U11(5) 0000		U14(5) 0000*
U10(6) 0000	U11(6) UP73		U14(6) UP73*
U10(7) 0000	U11(7) 0000		U14(7) 0000
U10(8) 1F2C	U11(8) ACA2		U14(8) UP73*
U10(9) 0000	U11(9) 55H1		U14(9) 0000*
U10(10) NA	U11(10) FH3F		U14(10) FH3F
U10(11) NA	U11(11) 334U		U14(11) NA
U10(12) 0000	U11(12) 0000*		U14(12) ACA2
U10(13) UP73*	U11(13) UP73*		U14(13) 0U16
U10(14) UP73	U11(14) UP73		U14(14) UP73

*Probe blinks

Table 8-17. A4, A6, A7 Offset Loop Synthesizer Troubleshooting

1. To test if the Offset Loop Synthesizer is working, put the 5342A in AUTO, 500 MHz—18 GHz range, and no input signal. Monitor the OFFSET CNTRL signal at A6TP1 and the MAIN CNTRL signal at A9TP1:

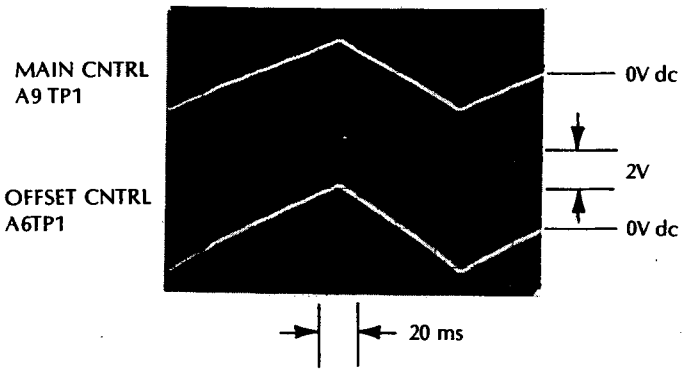

Also measure the A4 output signal levels with an RF millvoltmeter with a high impedance probe. XA4($\overline{10}$) should be around 600 mV rms and XA4($\overline{7}$) around 300 mV rms. Both levels are ±100 mV and essentially independent of frequency.

2. To determine if A4 has failed, use a clip lead to ground A6TP1. This forces the A4 VCO to its free run frequency of 325 MHz (±2 MHz). Connect XA4($\overline{10}$), the OFFSET OSC signal, to the direct count input of the 5342A using a coax cable with BNC connector on one end and alligator clips on the other. Adjust A4R1 for the proper frequency if necessary. Check that the level is approximately 600 mV rms.

3. If A4 is good, then either A6 or A7 has failed. Pull the A6 OFFSET LOOP AMP from the instrument, put A7 on an extender board and monitor A7U1(5) and A7U1(10), the phase detector outputs, with an oscilloscope. Put the 5342A in AUTO, 500 MHz—18 GHz range, and no signal input. Ground XA4($\overline{5}$), the OFFSET CNTRL signal, with a clip lead to cause A4 to go to 325 MHz. It may be necessry to push MAN, then AUTO, in order to get the characteristic display of all zeros and start the instrument sweeping. The display should be as follows:

TABLE 8-17
A4, A6, A7

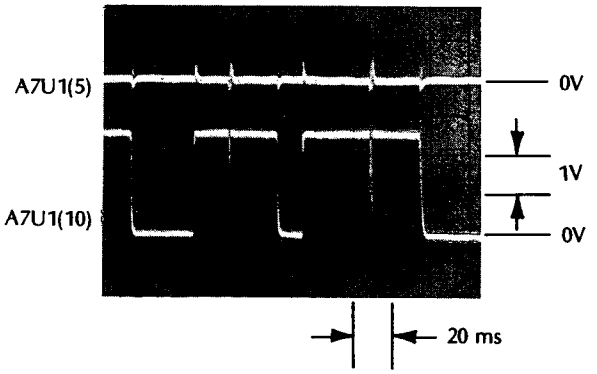

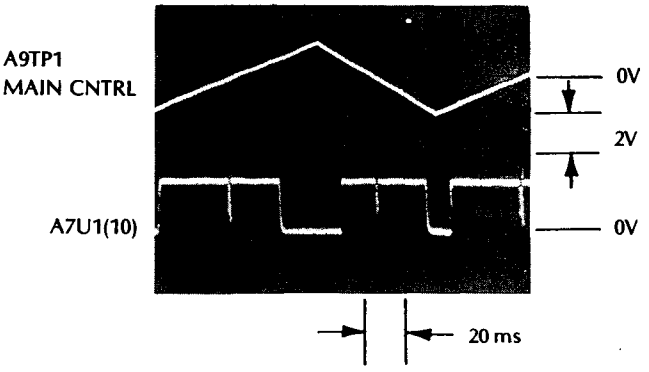

If these signals are present, then A7 is OK.

Table 8-17. A4, A6, A7 Offset Loop Synthesizer Troubleshooting (Continued)

4. If these signals are not present, then the mixer portion of A7 should be checked. With A6 out of the instrument, ground XA4($\overline{5}$) so that the A4 VCO goes to 325 MHz. Put the 5342A in manual mode and program the MAN center frequency (to check that the VCO frequency is that desired, put the 5342A in diagnostic mode 1 so that the main VCO frequency is displayed). For example, program the MAN center frequency to 576 MHz: the diagnostic mode 1 displays 325.5 MHz as the main VCO frequency. Monitor A7TP1, the output of the mixer and check for the presence of the difference frequency between the main VCO programmed frequency and the free run frequency of A4.

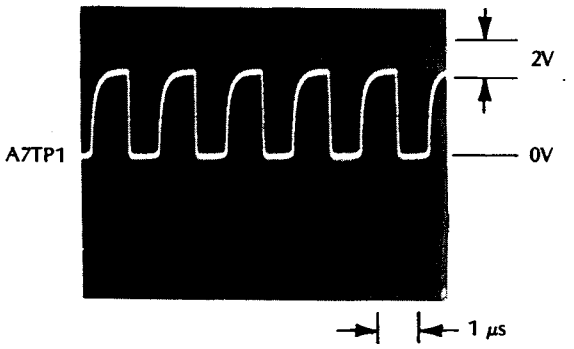

With A6 removed, HSRCH EN, XA7(2) should be TTL high.

5. To check A6, install A6 and remove A7 from the instrument. Remove the short to ground on XA4($\overline{5}$). The search generator on A6 should begin searching and driving the OFFSET CNTRL signal in a search ramp. LPOS SLOPE should go low to indicate when the frequency of the VCO is being swept from higher to lower values.

TABLE 8-17
A4, A6, A7

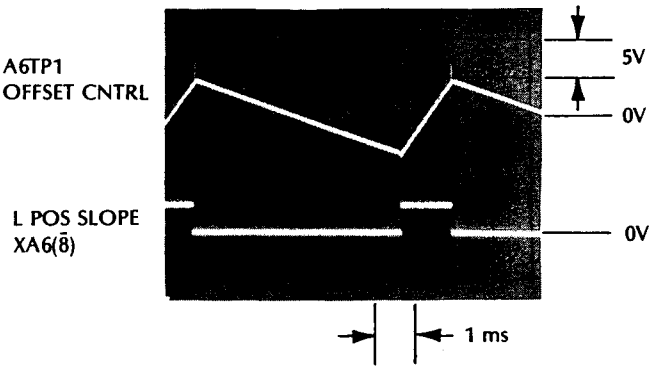

Table 8-18. A26 Sampler Driver Troubleshooting

1. Remove the U1 Sampler and A26 Sampler Driver as follows:
   a. Remove bottom panel by loosening screw at rear, remove two front feet and slide panel rearward.
   b. Locate assemblies at bottom front of instrument.
   c. Pull off coax cables from A1J1, A1J3, A25J1 (IF OUT INT) and A25J2 (IF OUT EXT).
   d. Disconnect rigid coax from U1 Sampler by loosening attaching nut.
   e. Remove nut on front panel type N connector and remove rigid cable to allow access.
   f. Remove cable strap connector at A22 motherboard and move cable strap to one side to allow access.
   g. Remove 5 screws (four corner and one middle screw) attaching A25 Preamplifier mounting bracket and withdraw bracket (and attached assemblies) from instrument.
   h. Remove A26 from bracket by removing the two small attaching bolts and nuts. Separate A26 from U1 by loosening the interconnecting hex connector from U1.
2. Set 5342A to CHECK mode and measure the sampler driver output with a power meter. The output should be greater than +16 dBm (if the output of A5, which is driving A26, is at a level of approximately +15 dBm).
3. If the A26 output level is good, then A26U1 and associated circuitry are probably functioning properly. However, a good level does **not** indicate that the step recovery diode CR1 is working. CR1 could be open. To check the diode with an ohmmeter, connect the positive lead of the ohmmeter (such as the HP 3465A in OHMS function) to the center conductor of the A26 Sampler Driver output and the common leads to the A26 case. Place the ohmmeter in the 2K range (1 mA current source) and measure a forward resistance of approximately 800 ohms. Measure a reverse resistance of infinity.
4. To replace CR1, simply unscrew the plastic holder and remove CR1 with tweezers. Reverse the process for assembly.

Table 8-19. A5 RF Multiplexer Troubleshooting

Set up the test equipment as shown:

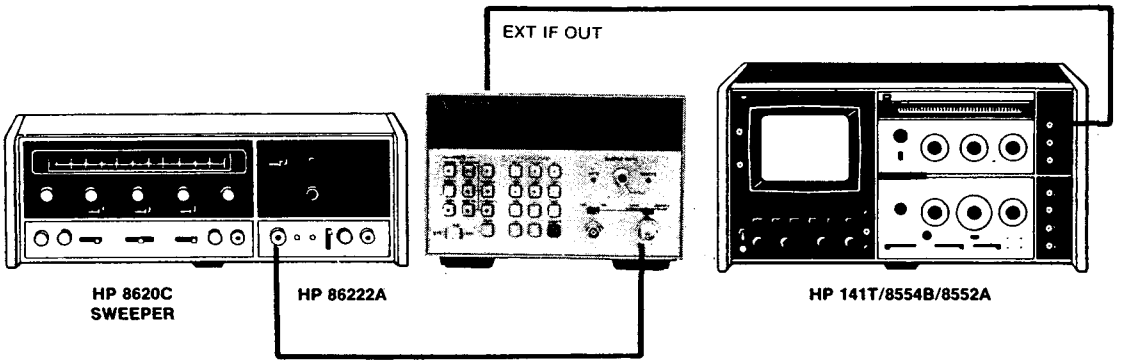

Set the 8620C to 1.2 GHz at approximately -20 dBm. Place the 5342A in AUTO, 500 MHz—18 GHz range, and in diagnostic mode 2 (press SET, SET, 2) so that the counter continuously displays the A counter contents as it remains in the harmonic determination routine. The trace on the spectrum analyzer should show two IF's, indicating that the A5 Multiplexer is switching between the main synthesizer and the offset synthesizer.

The wideband filter on A9 is switched in as can be determined by the wider noise skirts about the signal.

EXT IF OUT

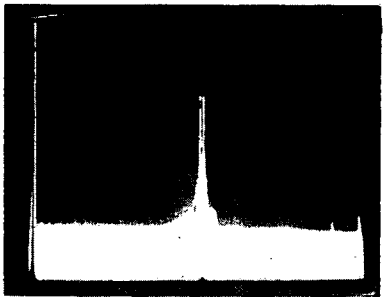

TABLE 8-19
A5

1.2 GHz @ -20 dBm input to CNTR

If the scale is expanded to 1 MHz/div., it is seen that the separation between the IF's is 2 MHz (=4 x 500 kHz) where 4 is the N number. Go to diagnostic mode 1 to verify N=4.

EXT IF OUT

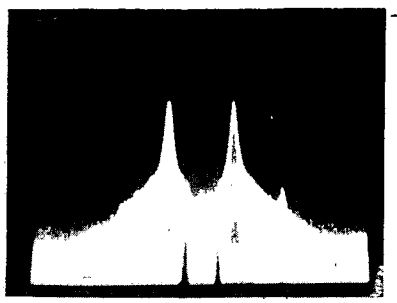

Table 8-19. A5 RF Multiplexer Troubleshooting (Continued)

Put counter in diagnostic mode 4 which continuously measures the IF. The narrow band filter on A9 is switched in and noise skirt about IF reduced:

EXT IF OUT

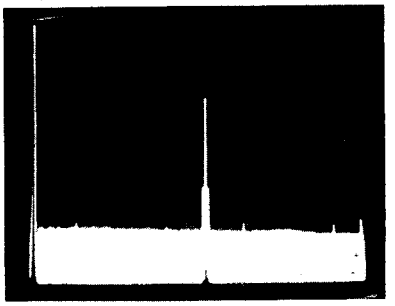

—0 dBm

20 MHz/div.
300 KHz BW

1.2 GHz @ -20 dBm input

ABLE 8-19
5

Table 8-20. Option 002 Amplitude Measurements Troubleshooting

GENERAL. The steps in this table troubleshoot the amplitude option in three basic tests:

1. The analog loop is checked for proper operation by checking the input voltage to the analog-to-digital converter;
2. The inputs and outputs of the analog-to-digital converter are checked;
3. The digital control is checked using signature analysis.

1. ANALOG LOOP CHECK

a. Set up test equipment as follows:

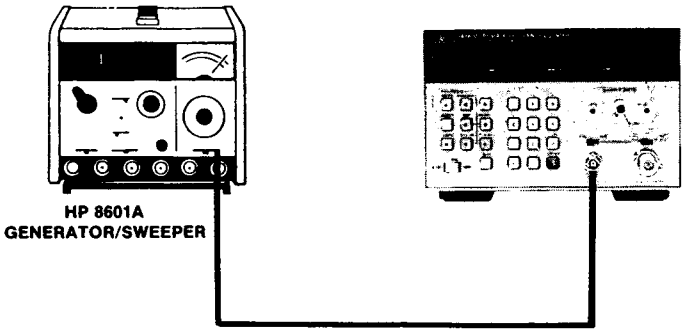

b. Place the A16 assembly on extender boards. Monitor the V_{in} Test point (same as A16U8(5). The following waveforms should be observed:

A16 V_{in} TEST POINT
50 MHz, -10 dBm INPUT

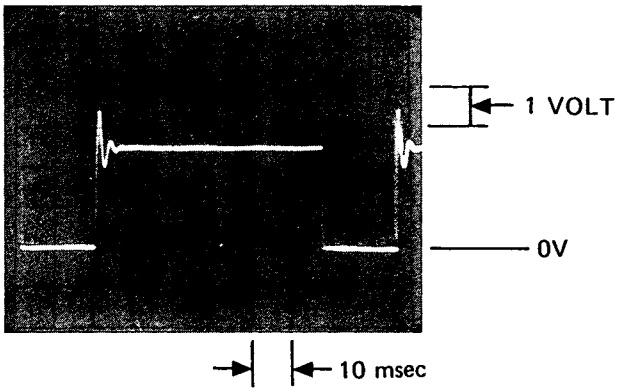

TABLE 8-20
OPTION 002

Table 8-20. Option 002 Amplitude Measurements Troubleshooting (Continued)

TABLE 8-20
OPTION 002

c. If the input level is increased to 0 dBm, the gain of A16U12 is decreased which decreases the level of V_{in} as follows:

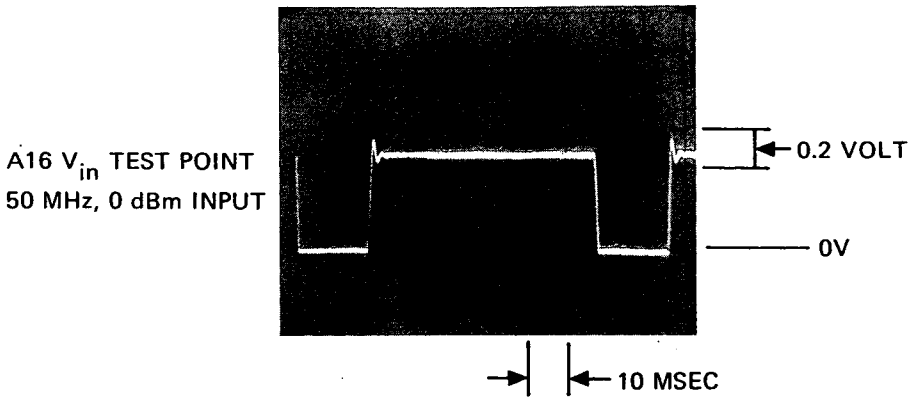

d. If the above waveforms are present, it indicates that the analog loop, consisting of A27 Low Frequency Amplitude module and the analog portion of A16 circuits are functioning properly. To test U2 High Frequency Amplitude module portion of the high frequency loop, apply a 500 MHz signal at -10 dBm to the high frequency input of the counter (5342A set up for 500 MHz-18 GHz range) and monitor the V_{in} test point. Similar waveforms should be observed.

e. If these waveforms are present, go to step 2, Analog-to-Digital Converter Check.

f. The following steps troubleshoot the analog loop:

(1) Apply a 50 MHz, -10 dBm signal to the low frequency input. Select AMPL and place the 5342A in diagnostic mode 6 (SET, SET 6). With a DVM, measure the DETECTED RF (LF) input to A16 at A16U18(2).

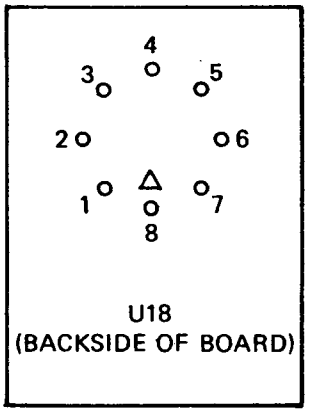

This voltage should be approximately -0.04 Volts. Increase the input level +10 dBm and measure A16U18(2). This voltage should be approximately -0.70 Volts. If not, check U17(15) for these voltages. If still not present, suspect bad cable or failed A27 Low Frequency Amplitude module.

(2) Apply a 2 GHz, -10 dBm signal to the high frequency input. With the counter in AMPL mode and diagnostic mode 6, measure the DETECTED RF (HF) input to A16 at A16U18(2). This voltage will be approximately -0.03 to -0.04 volts. Increase the input level to +10 dBm and observe a level in the range of approximately -0.6 to -0.7 volts.

Table 8-20. Option 002 Amplitude Measurements Troubleshooting (Continued)

(3) If the U2 High Frequency Module or the A27 Low Frequency module is suspected, perform the following dc checks using a DVM such as the 3465A. Place the DVM in OHMS function and 2KΩ range (if using a different DVM, select that range which provides a 1 mA constant current). Connect the positive lead of the DVM to the point indicated by a (+) and the common lead to the point indicated by a (-).

U2 High Frequency Module Checks

SIGNAL NAME	+	—	OHMMETER
	XA16$\overline{B3}$	GROUND	950Ω
	GROUND	XA16$\overline{B3}$	∞
	XA16$\overline{B4}$	GROUND	950Ω
	GROUND	XA16$\overline{B4}$	∞
DETECTED 100 kHz (HF)	A16J4*	GROUND	200Ω
	GROUND	A16J4	1.4KΩ
DETECTED RF (HF)	A16J5*	GROUND	200Ω
	GROUND	A16J5	1.4KΩ

A27 Low Frequency Module Checks

SIGNAL NAME	+	—	OHMMETER
	XA16B4	GROUND	1.2KΩ
	GROUND	XA16B4	700Ω
DETECTED 100 kHz (LF)	A16J3*	GROUND	200Ω
	GROUND	A16J3	1.4KΩ
DETECTED RF (LF)	A16J6*	GROUND	200Ω
	GROUND	A16J6	1.4KΩ

Note: *touch center conductor of connector to DVM.

If the U2 High Frequency Module on the A27 Low Frequency Module is suspected, perform the following dc checks using a DVM such as the 3465A. Place the DVM in OHMS function and 2KΩ range (if using a different DVM, select that range which provides a 1 mA constant current). Connect the positive lead of the DVM to the point indicated by a (+) and the common lead to the point indicated by a (—).

(4) Return the counter to normal operating mode by pressing RESET. Apply a 50 MHz, -10 dBm signal to the low frequency input. With the counter in AMPL mode, 1 MHz resolution, sample rate full CCW, 50Ω and 10 Hz-500 MHz range, observe the following waveforms at the 100 kHz test point (second TP from right edge of A16 board):

A16 100 kHz TEST POINT
50 MHz, -10 dBm INPUT

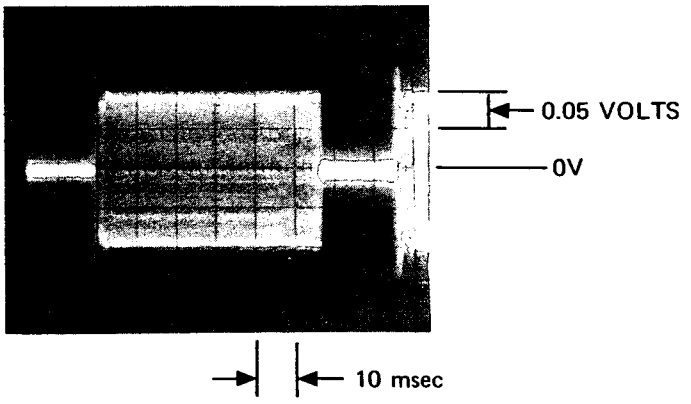

Table 8-20. Option 002 Amplitude Measurements Troubleshooting (Continued)

Increase the input level to 0 dBm:

A16 100 kHz TEST POINT
50 MHz, 0 dBm

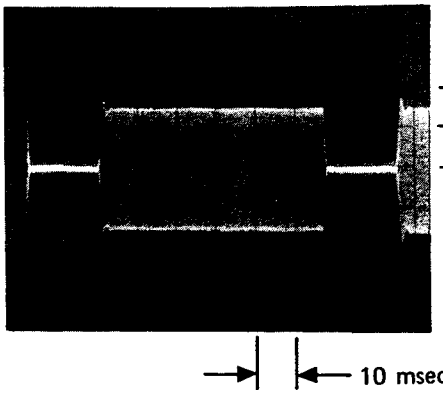

(5) With the 5342A set-up as in step (3), place the 5342A in diagnostic mode 6 and for a 0 dBm input observe a CW 100 kHz signal at the 100 kHz TP:

A16 100 kHz TEST POINT
50 MHz, 0 dBm
SET SET 6

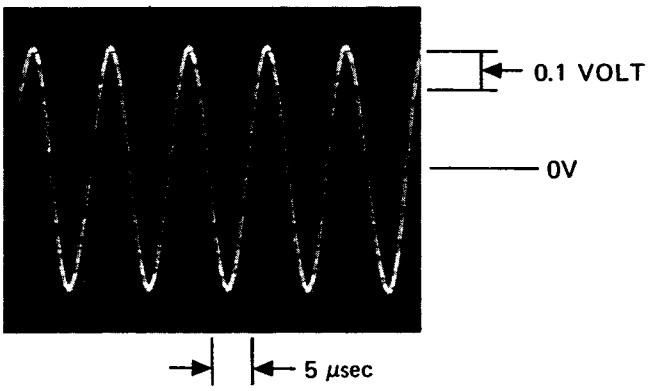

(6) To check the switching signals which are sent to the input multiplexers U2 and A27, apply a 50 MHz, -10 dBm signal to the low frequency input of the 5342A. Place the 5342A in 50Ω, 10 Hz-500 MHz range, 1 MHz resolution, sample rate full CCW and AMPL mode. Monitor the AMPL SEL signal at XA16B(4) with an oscilloscope:

Table 8-20. Option 002 Amplitude Measurements Troubleshooting (Continued)

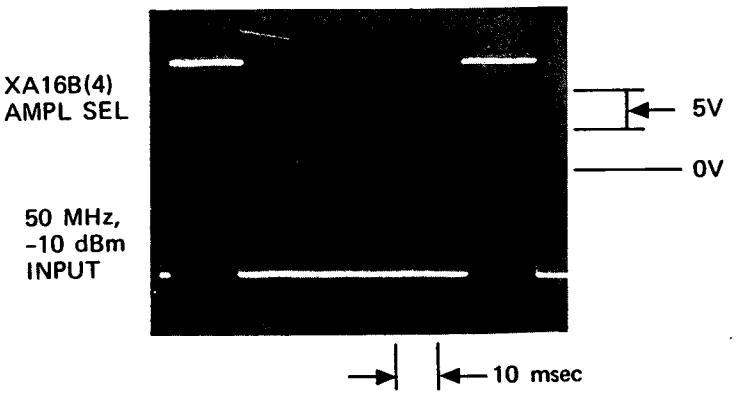

(7) If this signal (shown above) is not present, go to diagnostic mode 6 and measure the following dc levels for AMPL on and AMPL off:

A16 DC Levels, 50 MHz, -10 dBm Input

Front Panel Mode	U5(10)	Q8 Collector	Q8 Emitter	Q7 Collector	Q5 Emitter
AMPL ON	+0.2V	+14.6V	+0.02V	-13.9V	-13.1V
AMPL OFF	+3.9	+14.5V	+3.3	+15.1	+14.5V

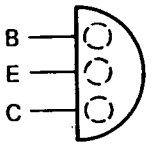

Table 8-20. Option 002 Amplitude Measurements Troubleshooting (Continued)

(8) Apply a -10 dBm, 500 MHz signal to the 500 MHz-18 GHz input and press RESET. Set the 5342A to 1 MHz resolution, AMPL on, and the 500 MHz-18 GHz range. Check the AMPL ON signal at XA16B(4) and the FREQ ON signal at XA16B(3) with an oscilloscope:

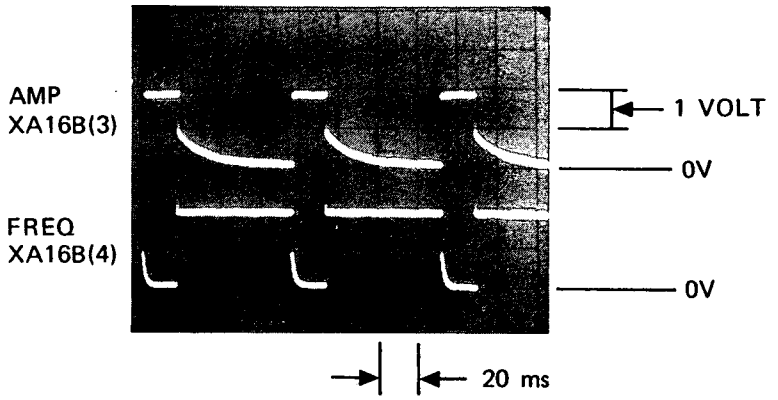

(9) If the waveforms (shown above) are not present, go to diagnostic mode 6 and check the voltages in the following table:

A16 DC LEVELS, 500 MHz, -10 dBm INPUT

Mode	U5(10)	U5(11)	Q5 Emitter	Q9	Q6	Q4	Q1	Q2
AMPL ON	+0.2	+3.4	-13.1	+4.97C +4.2B	+0.07C +0.7B	+4.99C +0.07B	+0.05C +5.0B	+0.05C +5.0B
AMPL OFF	+3.9	+0.2	+14.5	+0.01C +4.98B	+4.8C +0.16B	+0.07C +0.7B	+5.0C +4.4B	+5.0B +4.3B

Note: C = Collector, B = Base

NOTE

For amplitudes greater than approximately +5 dBm at the high frequency input, the ATT signal at XA16B(3) changes from +7(±1) volts (low levels) to 0(±1) volts (high levels). To verify proper operation, apply a 500 MHz, -10 dBm signal to the 5342A high frequency input. Select AUTO and AMPL off. Increase the input level while monitoring XA16B(3) on the ATT test point with a DVM. Decrease input level until ATT goes to +7(±) volts again. The input signal level where this occurs should be around 1-2 dB less than the level which originally caused ATT to go low.

Table 8-20. Option 002 Amplitude Measurements Troubleshooting (Continued)

2. **ANALOG-TO-DIGITAL CONVERTER CHECK**

a. Using DVM, measure the following voltage points:

(1) Check the 10 volt reference at the +10V TP (or A16U8(3) for 10.00 volts.

(2) Check the 6.6V TP (or A16U8(7)) for 6.64V DC.

(3) Check the 3.2V TP (or A16U8(8)) for 3.20V DC.

b. Apply a 50 MHz, -10 dBm signal to the 5342A low frequency input. Set the 5342A to 50Ω, 10 Hz-500 MHz range, 1 MHz resolution, sample rate full CCW, and AMPL mode. Monitor U5(6) and the *start conversion* signal at U5(3) with an oscilloscope:

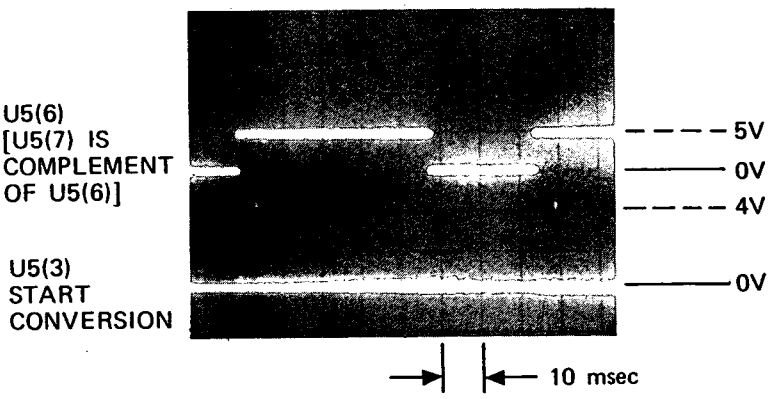

CAUTION

U8 is a large-scale MOS integrated circuit. Its inputs are susceptible to damage by high voltage and static charges. Particular care should be exercised when servicing this circuit or handling it under conditions where static charges can build up.

c. With the counter set up as in step b, monitor the conversion complete signal at U6(10) and U8(6). Since U6(10) also receives data, the signal at U6(10) may vary as shown in the following two scope photos. In the first photo, the data is high after the conversion complete goes low (true). In the second photo, the data is low after the conversion complete goes low.

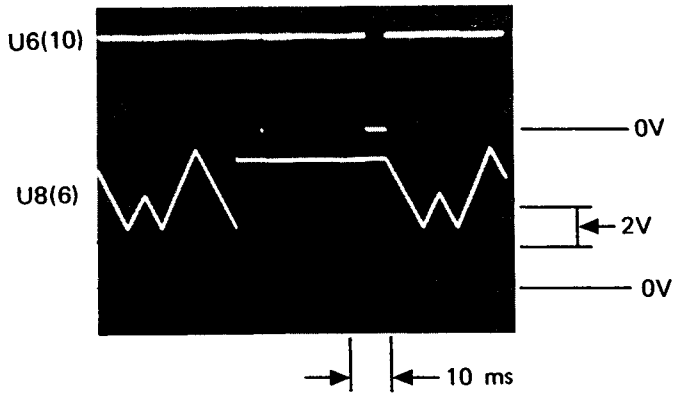

Table 8-20. Option 002 Amplitude Measurements Troubleshooting (Continued)

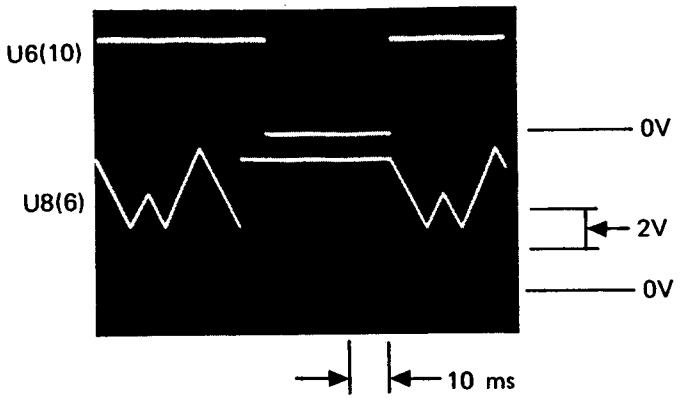

3. **DIGITAL CHECK**

a. Place the A16 assembly on a 10- and an 18-pin extender board (05342-60030 and 05324-60033). Set switches S1 and S2 on the A14 Microprocessor assembly to the Count Mode as shown below.

Normal Mode

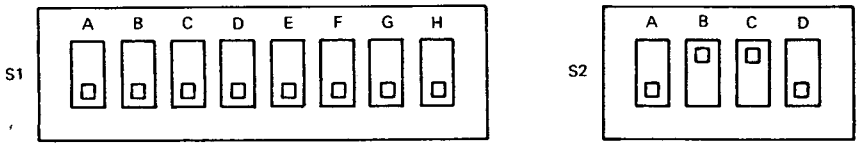

Count Mode (for use with 5004A Signature Analyzer)

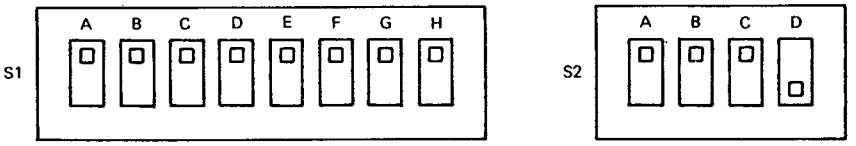

b. Connect 5004A Signature Analyzer START and STOP probes to A16U1(4), the CLOCK probe to $\overline{\text{VMA}}$ Ø2 test pin on the A14 assembly and the GND probe to ⏚ test pin on the A14 assembly. Set the 5004A front panel switches as follows:

START ⌐‾|_

STOP _|‾|_

CLOCK _|‾|_

Table 8-20. Option 002 Amplitude Measurements Troubleshooting (Continued)

Signatures on PROM U4 should be as follows:

Signal Name	Location	Signature
LAØ	U4(8)	A872
LA1	U4(7)	2068
LA2	U4(6)	335H
LA3	U4(5)	OF51
LA4	U4(4)	C177
LA5	U4(3)	U929
LA6	U4(2)	3032
LA7	U4(1)	HU4U
LA8	U4(23)	9CC8
LA9	U4(22)	5F08
LA10	U4(19)	U81P
LA11	U4(20)	0000
	U4(9)	1U2F
	U4(10)	7471
	U4(11)	H412
	U4(13)	59U1
	U4(14)	512P
	U4(15)	60HA
	U4(16)	7463
	U4(17)	85C8

c. Connect the 5004A Signature Analyzer START and STOP probes to A16U9(8) (test pin labeled $3) on A16 assembly, the CLOCK probe to $\overline{\text{VMA}}$ 02 test pin on the A14 assembly and the GND probe to ⏚ test pin on the A14 assembly. Set the 5004A front panel switches as follows:

START ⌝_

STOP _⌜‾

CLOCK _⌜‾

d. Remove PROM A16U3 from its socket. Signatures on A16U6 and U7 should be as follows:

Signal Name	Location	Signature
H READ ADC	U6(1)	0000
L READ	U6(15)	0000
	U6(2)	733U
DB4/DB12	U6(3)	0000
	U6(5)	U110
DB5	U6(6)	0000
	U6(11)	HHH8
DB7/BUSY	U6(10)	0000
	U6(14)	8UUH
DB6/OVERRANGE	U6(13)	0000
H READ ADC	U7(1)	0000
L READ	U7(15)	0000
	U7(2)	UFU5
DBØ/DB8	U7(3)	0000
	U7(5)	P9A7
DB1/DB9	U7(6)	0000
	U7(11)	2045
DB3/DB11	U7(10)	0000
	U7(14)	6C72
DB2/DB10	U7(13)	0000
LDØ	U7(4)	9FFU
LD1	U7(7)	899H
LD2	U7(12)	OC48
LD3	U7(9)	407U
LD4	U6(4)	1305
LD5	U6(7)	912A
LD6	U6(12)	PUF7
LD7	U6(9)	CHP2

Table 8-20. Option 002 Amplitude Measurements Troubleshooting (Continued)

e. Connect the 5004A Signature Analyzer START and STOP probes to A16U9(1), the CLOCK probe to $\overline{\text{VMA}}$ Ø2 test pin on the A14 assembly and the GND probe to ⏚ test pin on the A14 assembly. Set the 5004A front panel switches as follows:

START ⎍

STOP ⎍

CLOCK ⎍

f. Observe the following signatures:

+5V 0003 (Characteristic High Signature)

Pin	Signature	Pin	Signature
U1(1)	854F	U9(1)	0002
(2)	854U	(2)	9UP2
(3)	6U2C	(3)	0003
(4)	6U28	(4)	0003
		(5)	0003
		(6)	0003
U2(1)	6114	(8)	854F
(2)	486C	(9)	—
(3)	4FC9	(10)	—
(4)	C91U	(11)	6114
(5)	3F53	(12)	0003
(6)	854U		
(8)	3F50		
(9)	0003		
(10)	0000		
(11)	3F50		
(12)	0000		
(13)	3F53		

Table 8-21. Option 011 HP-IB Troubleshooting

1. Acceptor Handshake Troubleshooting

a. Setup:

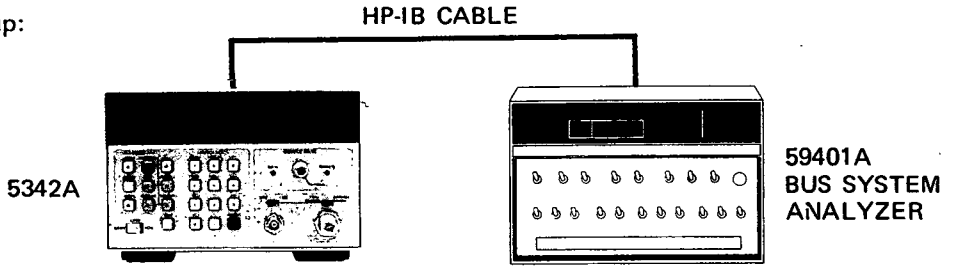

Set 5342A rear panel address switch to:

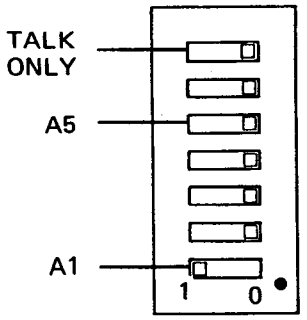

59401A settings:
MEMORY . . . . OFF
COMP . . . . . OFF
TALK Mode
HALT
ATN = 1, SRQ = 0, EOI = 0
REN true (REN light on)
DIO switches to 5342A listen address:

8	7	6	5	4	3	2	1
0	0	1	0	0	0	0	1

b. Remove the A14 Microprocessor assembly from the 5342A. Perform the actions listed in *Table 8-21A* to verify the acceptor handshake. Use a 546A Logic Pulser to apply a clock pulse to a particular circuit node. Use a 545A Logic Probe to check the state of circuit nodes.

Table 8-21A. Acceptor Handshake (HP-IB)

STEP	ACTION	59401A*			U6(13)	U3(9)	U6(10)	U6(4)	U3(5)	U6(1)	U32(6)	COMMENTS
		DAV Light	NRFD Light	NDAC Light								
Ø	Apply power to 5342A	OFF	ON	ON	Low	High	Low	Low	High	Low	High	Since the 5342A's listen address is on the data lines, U33(14) should be high. If not, check inputs. U33(4,5,6,7, 9,10,11,12) should all be TTL high. U33(3,13) should be TTL low.
1	Clock U3(11) once	OFF	OFF	ON	Low	Low	High	Low	Low	Low	Low	U20(10) and U29(6) should go high. U23(2) should go high. U1(8) should go high. Interrupt flag U10(5) should go high
2	Press EXECUTE on 59401A	ON	OFF	ON	High	Low	High	Low	Low	Low	Low	
3	Clock U3(11) once	ON	OFF	ON	High	High	Low	High	Low	Low	Low	
4	Clock U3(11) once	ON	ON	ON	Low	High	Low	High	High	Low	High	
5	Clock U3(11)	OFF	ON	OFF	Low	Low	Low	Low	High	High	High	
6	Go to Step 1 and Handshake sequence Repeats											

NOTES:
*DAV "ON" means that LDAV at A15U31(6) is TTL Low.
NRFD "ON" means that HRFD at A15U22(14) is TTL Low.
NDAC "ON" means that HDAC at A15U25(14) is TTL Low.

Table 8-21. Option 011 HP-IB Troubleshooting (Continued)

2. Source Handshake Troubleshooting

a. Setup:

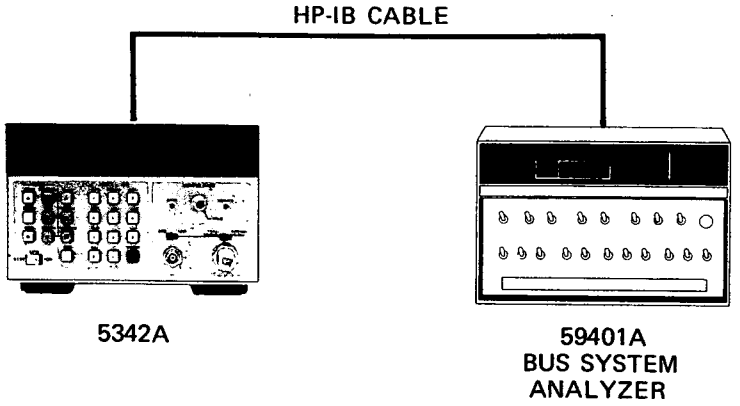

Set rear panel address switch to Talk only:

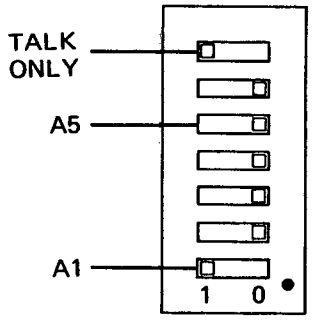

59401A settings:
- REN true (REN light ON)
- HALT
- LISTEN mode

b. Remove the A14 Microprocessor assembly. Perform the actions listed in *Table 8-21B* to verify the source handshake. Use a 546A Logic Pulser to clock circuit nodes and a 545A Logic Probe to check the state of circuit nodes.

BLE 8-21
TION 011

Table 8-21B. Source Handshake (HP-IB)

STEP	ACTION	59401A			U5(4)	U9(9)	U2(4)	U2(13)	U4(9)	U5(13)	U4(5)	U36(3)
		DAV Light	NRFD Light	NDAC Light								
0	Apply power to 5342A	OFF	OFF	ON	High	High	Low	Low	High	Low	Low	High
1	Clock U9(11) once	OFF	OFF	ON	High	Low	High	Low	High	Low	Low	High
2	Clock U4(11) once	OFF	OFF	ON	High	Low	High	High	Low	Low	Low	High
3	Clock U4(11) once	ON	OFF	ON	High	Low	Low	High	Low	Low	High	Low
4	Press EXECUTE on 59401A	ON	ON	OFF	High	Low	Low	Low	Low	Low	High	Low
5	Clock U4(11) once	OFF	OFF	ON	Low	High	Low	Low	High	Low	High	High
6	Clock U4(11) once	OFF	OFF	ON	High	High	Low	Low	High	Low	Low	High
7	Go to Step 1 and the Handshake Sequence Repeats											

Table 8-21. Option 011 HP-IB Troubleshooting (Continued)

3. U23, U26 ROM Troubleshooting

a. Setup:

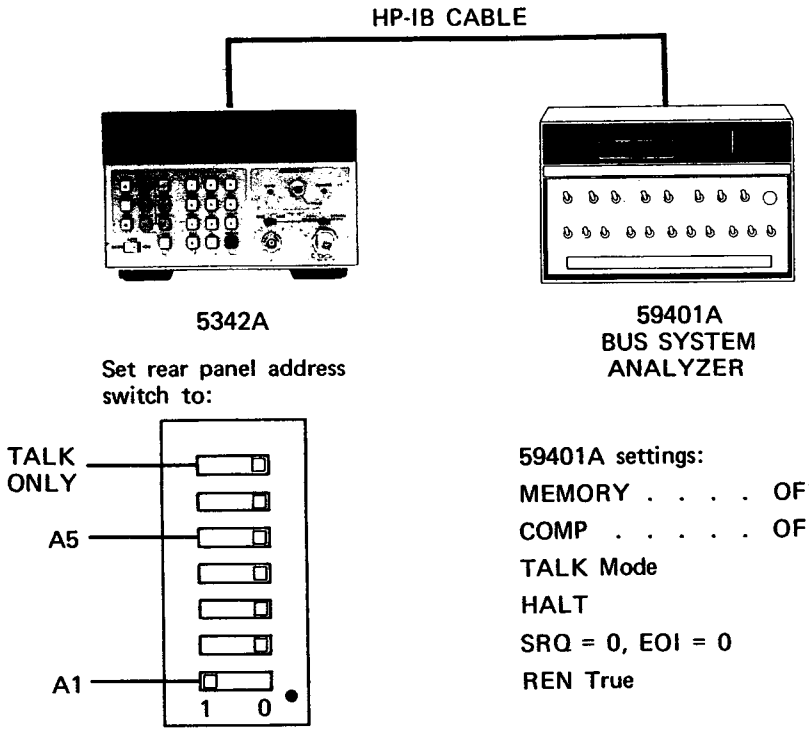

b. Remove the A14 Microprocessor assembly from the 5342A. Place A15 HP-IB assembly on an extender. Place an AP clip on U1 and ground U1(8). Set ATN and the DIO switches on the 59401A as listed in *Table 8-21C* and check with a 545A Logic Probe for the correct outputs.

Table 8-21C. U23, U26 ROM Table (HP-IB)

COMMENTS	**59401A SETTINGS DIO LINES									*U23 PINS							*U26 PINS							
	ATN	8	7	6	5	4	3	2	1	1	2	3	4	5	6	7	1	2	3	4	5	6	7	9
Listen Address	1	0	0	1	0	0	0	0	0	1	0	1	1	1	1	1	1	0	1	0	0	0	0	0
Talk Address	1	0	1	0	0	0	0	0	0	0	1	1	1	1	1	1	1	0	1	0	0	0	0	0
Data (M)	0	0	1	0	0	1	1	0	1	1	1	1	1	0	0	1	1	0	1	0	0	0	0	0
Go to Local	1	0	0	0	0	0	0	0	1	1	1	0	0	1	0	1	1	0	1	1	1	0	1	0
Serial Poll Enable	1	0	0	0	1	1	0	0	0	1	1	0	1	1	1	1	1	1	1	0	0	0	0	0
Serial Poll Disable	1	0	0	0	1	1	0	0	1	1	1	0	1	1	1	1	1	0	0	0	0	0	0	0
Group Execute Trigger	1	0	0	0	0	1	0	0	0	1	1	0	0	1	0	1	1	0	1	1	0	0	1	0
Local Lock-Out	1	0	0	0	1	0	0	0	1	1	1	0	0	1	0	1	1	0	1	1	1	1	1	0
Device Clear	1	0	0	0	1	0	1	0	0	1	1	0	0	1	0	1	1	0	1	0	1	1	1	0
Selected Device Clear	1	0	0	0	0	0	1	0	0	1	1	0	0	1	0	1	1	0	1	0	1	0	1	0
Unlisten	1	0	0	1	1	1	1	1	1	1	0	1	1	1	1	1	0	0	1	0	0	0	0	0
Untalk	1	0	1	0	1	1	1	1	1	0	1	1	1	1	1	1	0	0	1	0	0	0	0	0

NOTES:
*Ground U1(8) to enable ROM U23
*1 = TTL High for U23, U26
**(1 = TTL Low for 59401A outputs, e.g., if DIO7 set to 1, then LDIO7 at A15U31(10) is TTL Low)

Table 8-21. Option 011 HP-IB Troubleshooting (Continued)

4. Troubleshooting Registers U27, U24, U21, U16, U18, U30, U15

a. Setup:

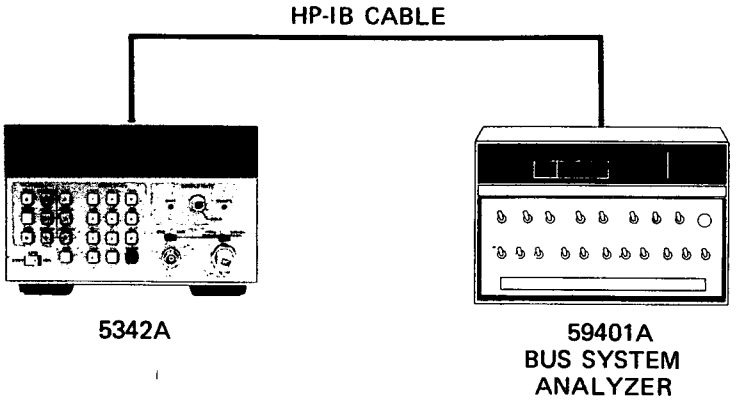

b. Remove A14 Microprocessor assembly from the 5342A and place the A15 HP-IB assembly on extender boards.

c. Place an AP clip on U11 and connect a clip lead from U11(12) to ground. This enables the U27 Data In register.

d. U27 CHECK:

Set the 59401A to TALK, HALT, and the 8 DIO switches to Ø (all switches down). Check the inputs to U27(3, 4, 7, 8, 13, 14, 17, 18) for all TTL high. If these inputs are not all TTL high, troubleshoot the input data buffers U22, U25, U31. With the 546A Logic Pulser, pulse U27(11). Check the outputs of U27(2, 5, 6, 9, 12, 15, 16, 19) for all TTL high. Change the DIO switches of the 59401A to all 1 (all switches up). Pulse U27(11) once. Check the U27 outputs for all TTL low.

e. U21 CHECK:

If U27 is working, it is possible to control the state of the microprocessor data bus and thereby check out U21, U24, and U16. To check out U21, ground U12(5) with another clip lead (U12(12) is still grounded). This enables U21. With the 59401A DIO switches all set to 1 (all switches up), clock U27(11) with the Logic Pulser. Now clock U21(11). Check the outputs of U21(2, 5, 6, 9, 12, 15, 16, 19) for all TTL low. Now change all the 59401A DIO switches to Ø (all switches down). Clock U27(11) with the Logic Pulser. Verify that the U21 outputs are still TTL low. Now clock U21(11). Verify that the U21 outputs are all high.

f. U24 CHECK:

Change the clip lead on U12 from pin 5 to pin 13 so that U12(13) is grounded. Check that U21(1) is TTL high. If U21(1) remains low after the clip lead is removed, the serial poll FF U29 must be set high. To do this, ground U29(14) and clock U29(12). Verify that U29(10) is TTL high. U12(13) grounded enables U24. U27 should still be enabled by the ground on U11(12). With the 59401A

DIO switches all set to Ø (switches down), clock U27(11) and clock U24(11). Verify that the outputs of U24(2, 5, 6, 9, 12, 15, 16, 19) are all TTL high. Change the 59401A DIO switches to 1 (all switches up). Clock U27(11) with the Logic Pulser. Verify that all the U24 outputs are still TTL high. Now clock U24(11) and verify that the U24 outputs are all TTL low.

g. U16 CHECK:

Remove the clip lead from U12(13). U27 should still be enabled by the ground on U11(12). With the DIO switches of the 59401A all set to 1 (all switches up), clock U27(11) with the 546A Logic Pulser. Next clock U16(9) and verify that the outputs of U16(2, 5, 7, 10, 12, 15) are all TTL low. Change the DIO switches on the 59401A to Ø (all switches down) and clock U27(11). Verify that U16 outputs remain TTL low. Now clock U16(9) and verify that the U16 outputs are all TTL high.

Table 8-21. Option 011 HP-IB Troubleshooting (Continued)

h. U18 CHECK:

Change the clip lead on U11 from pin 12 to pin 13 so that U11(13) is now grounded. This action will disable the U27 Data In register and will enable the U18 Interrupt Out register. Clock each of the inputs to U18(2, 4, 6, 10, 12) with a 546A Logic Pulser, and simultaneously check the corresponding output, U18(3, 5, 7, 9, 11) with the 545A Logic Probe. Remove the ground from U11(13) and verify that clocking an input has no effect upon an output (all the outputs should be in the high Z state).

i. U30 CHECK:

Change the ground to U11(15) with the clip lead. This enables the State In register U30. Clock each of the inputs to U30(2, 6, 10, 12, 14) and simultaneously check the corresponding outputs of U30(3, 7, 9, 11, 13). Remove the ground from U11(15) and verify that clocking an input has no effect upon an output.

j. U15 CHECK:

Change the ground to U11(14) which enables the Command In register U15. Set the DIO switches and ATN to the following:

ATN	8	7	6	5	4	3	2	1
1	0	0	1	0	0	0	0	0

(5342A rear panel HP-IB address switches set to 00001)

This should cause the U26 ROM outputs to present a TTL low to U15(12, 13, 14). Verify this with a logic probe. U15(11) will be TTL high since the A15 assembly powers up with the U20 Listen FF reset.

Clock U15(7) with the Logic Pulser and verify that U15(3, 4, 5) are TTL low and U15(6) is TTL high.

Set the DIO switches to the following:

ATN	8	7	6	5	4	3	2	1
1	0	0	1	0	0	0	0	1

Clock U20(12) to set the U20 Listen FF. This causes U15(11) to go TTL low.

Now set the DIO switches to the following:

ATN	8	7	6	5	4	3	2	1
1	0	0	0	1	0	0	0	1

This causes the U26 ROM outputs to present a TTL high to U15(12, 13, 14). Verify this with the logic probe. U15(11) should be TTL low. Clock U15(7) and verify that U15(3, 4, 5) are TTL high and U15(6) is TTL low.

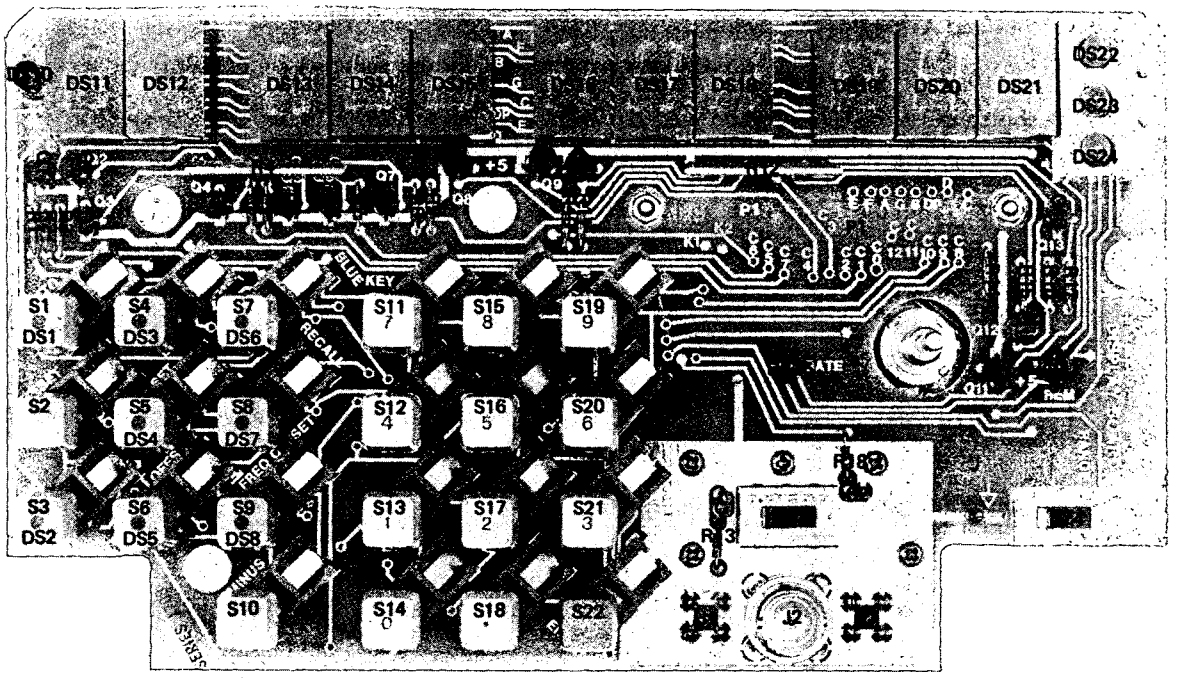

Part of Figure 8-19. 5342A Front (A1 Display) View

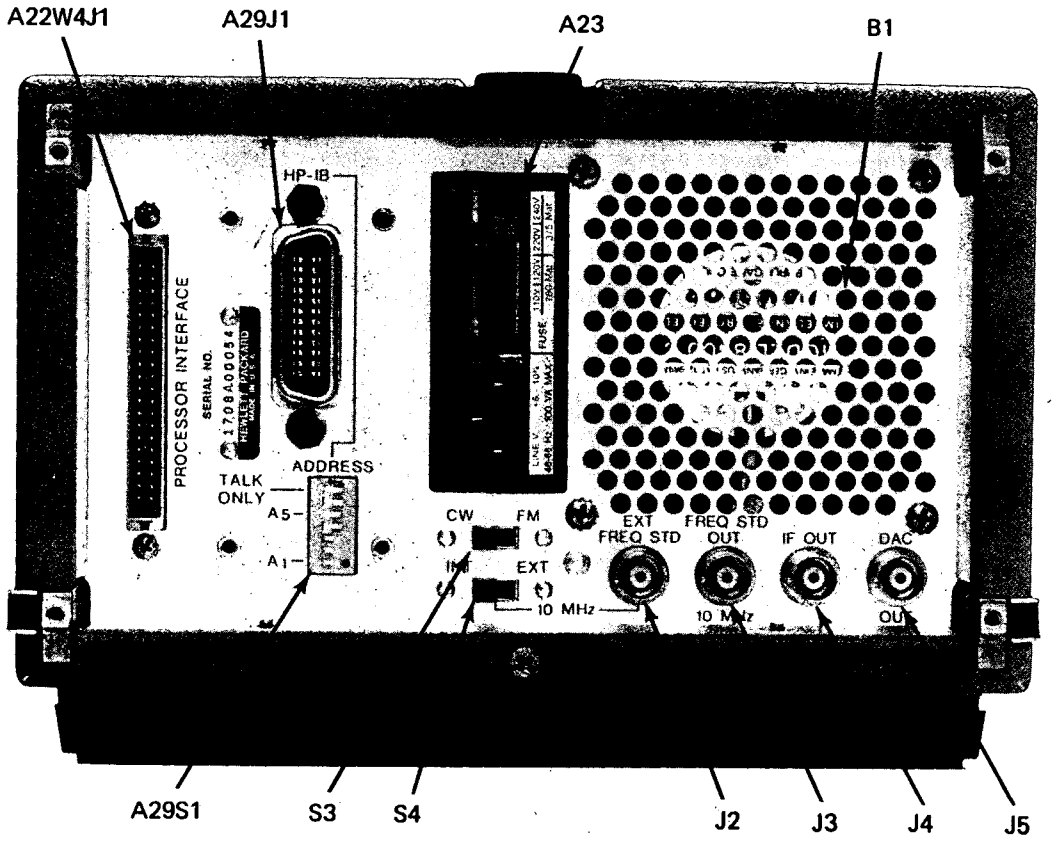

Figure 8-20. 5342A Rear View

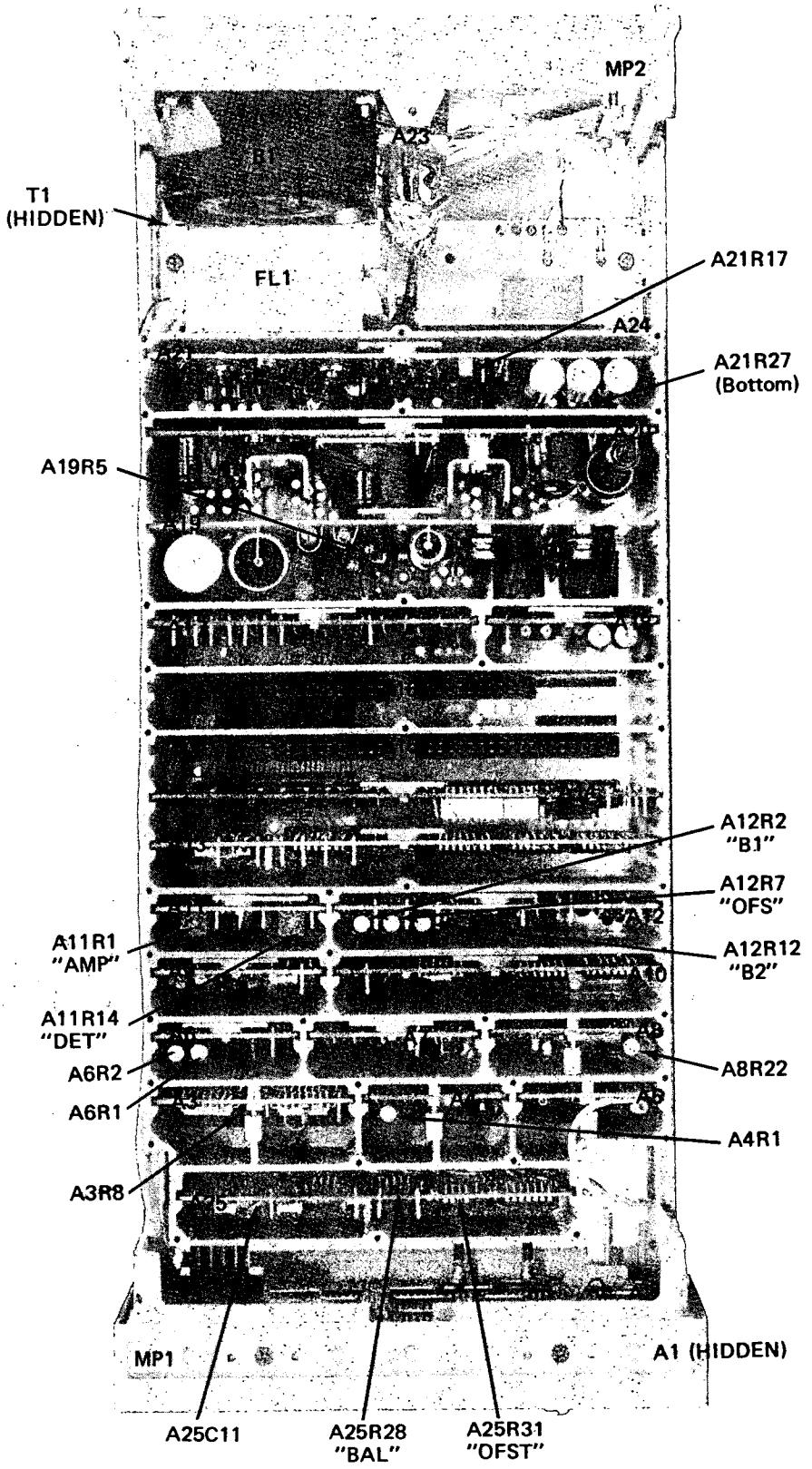

Figure 8-21. 5342A Top View (Assembly Locations and Adjustments)

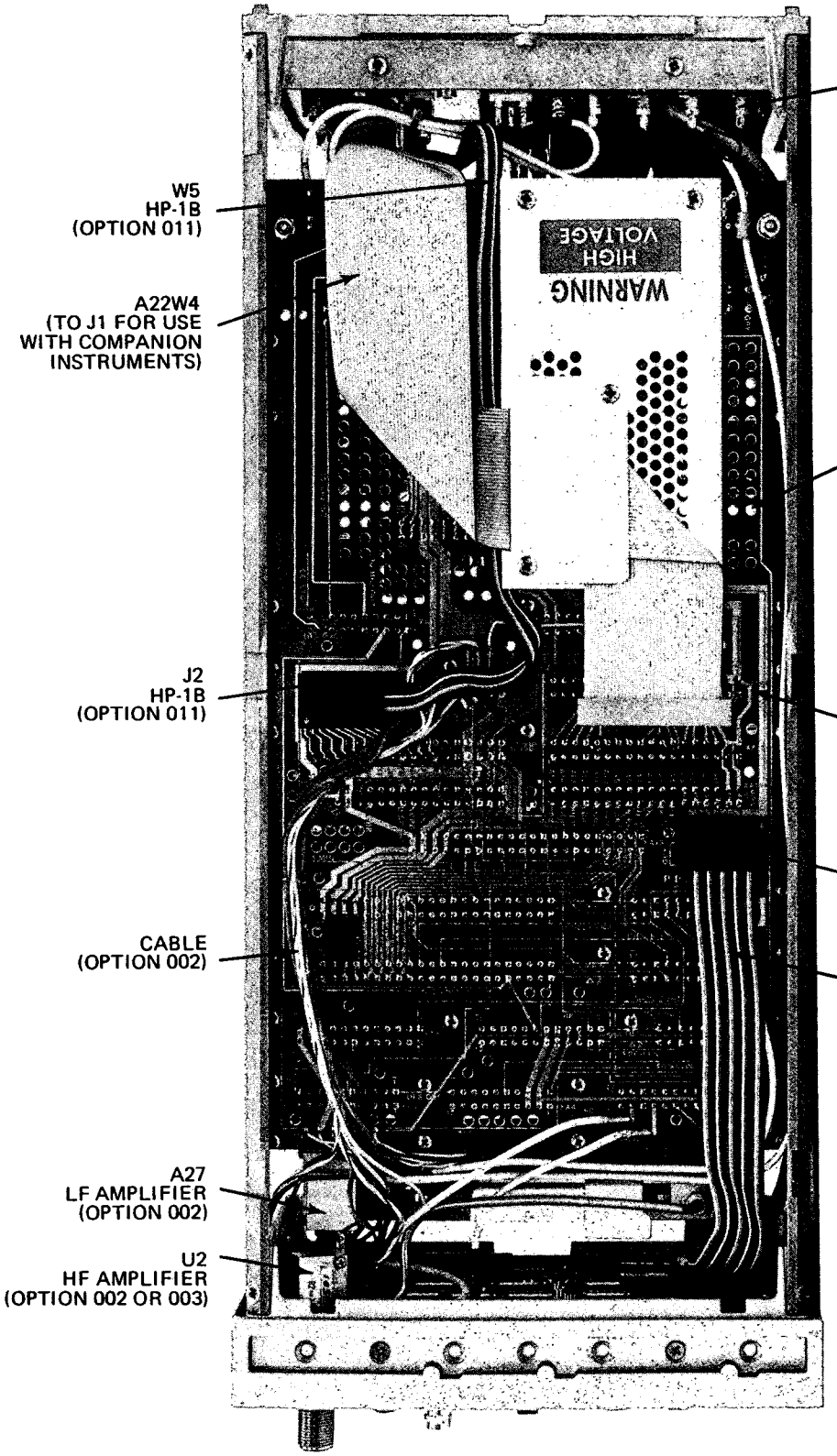

Figure 8-22. 5342A Bottom View, Options Installed

Figure 8-23
5342A DETAILED BLOCK DIAGRAM

(See Page 8-147)

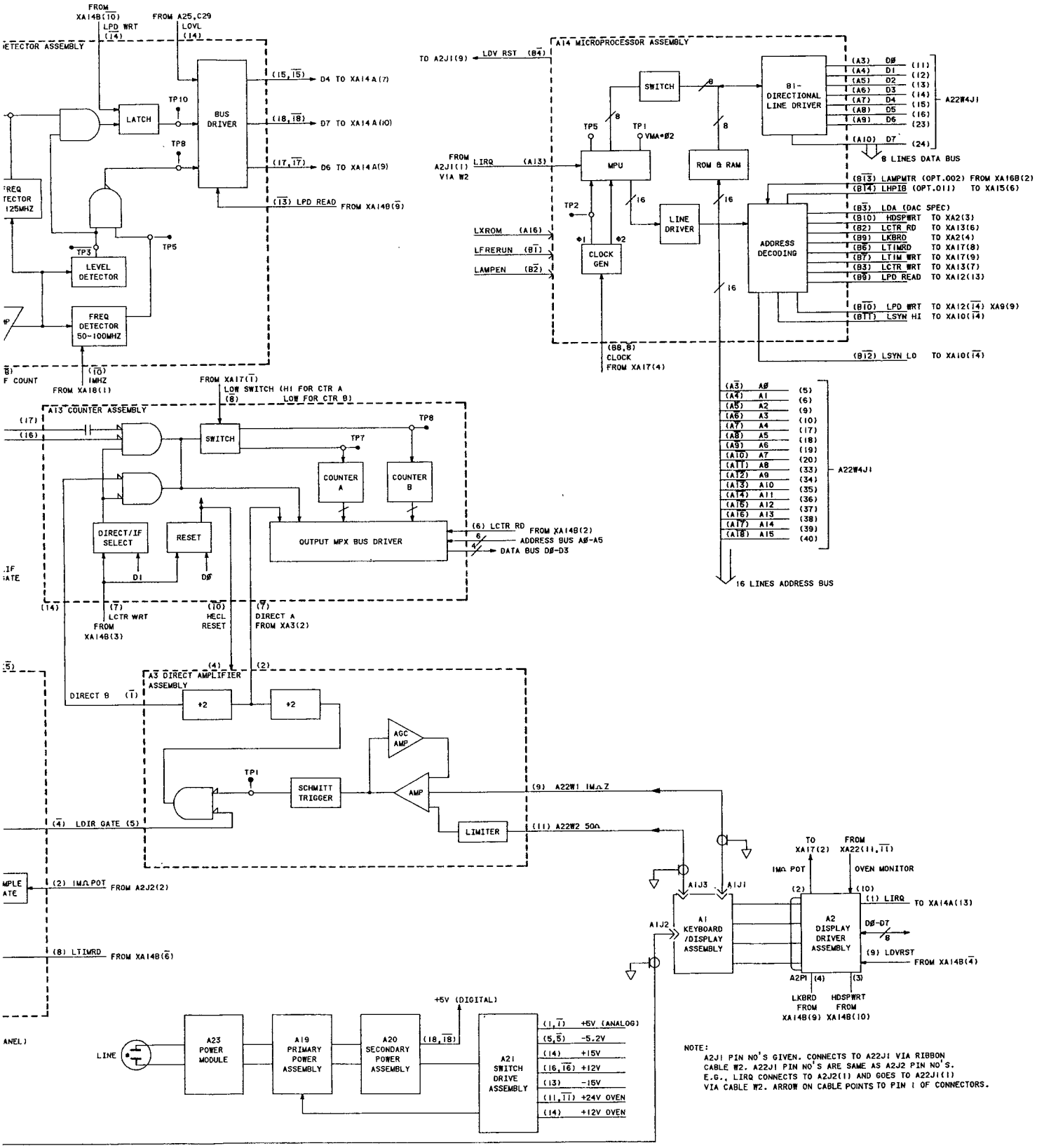

Figure 8-23. 5342A Detailed Block Diagram

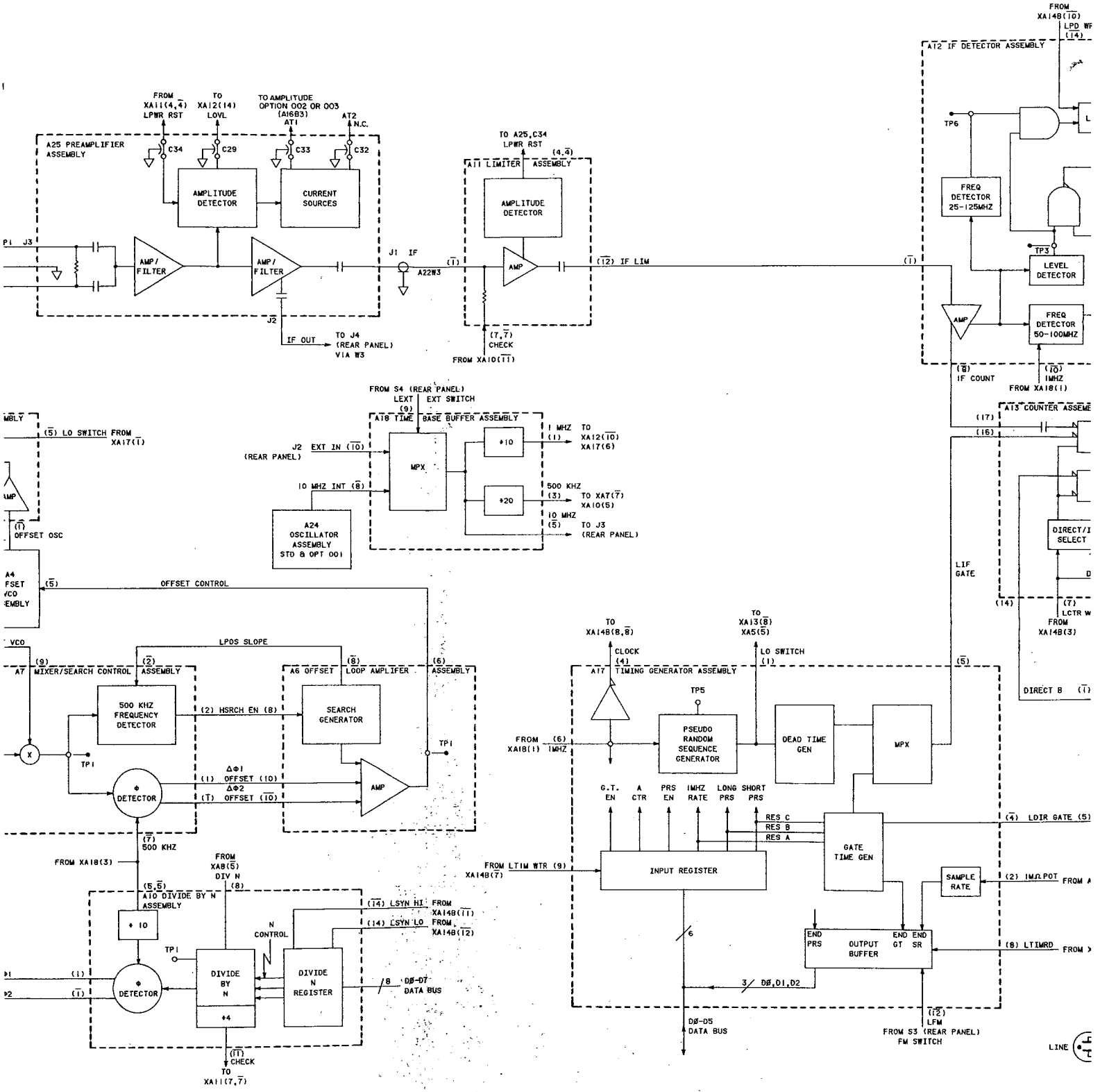
A25 PREAMPLIFIER ASSEMBLY
AMPLITUDE DETECTOR
CURRENT SOURCES
AMP/ FILTER
AMP/ FILTER
A11 LIMITER ASSEMBLY
AMPLITUDE DETECTOR
AMP
A22W3
IF OUT
TO J4 (REAR PANEL) VIA W3
CHECK
FROM XA10(11)
A12 IF DETECTOR ASSEMBLY
FREQ DETECTOR 25-125MHZ
LEVEL DETECTOR
FREQ DETECTOR 50-100MHZ
IF COUNT
IMHZ
FROM XA18(1)
A18 TIME BASE BUFFER ASSEMBLY
MPX
*10
*20
1 MHZ TO XA12(10) XA17(6)
500 KHZ TO XA7(7) XA10(5)
10 MHZ TO J3 (REAR PANEL)
10 MHZ INT (8)
J2 EXT IN (10) (REAR PANEL)
FROM S4 (REAR PANEL) LEXT EXT SWITCH
A24 OSCILLATOR ASSEMBLY STD & OPT 001
OFFSET OSC
LO SWITCH FROM XA17(1)
OFFSET CONTROL
LPOS SLOPE
A7 MIXER/SEARCH CONTROL ASSEMBLY
500 KHZ FREQUENCY DETECTOR
(2) HSRCH EN (8)
SEARCH GENERATOR
A6 OFFSET LOOP AMPLIFER ASSEMBLY
ΔΦ1
(1) OFFSET (10)
ΔΦ2
(7) OFFSET (10)
AMP
TP1
DETECTOR
500 KHZ
FROM XA18(3)
FROM XA8(5) DIV N
A10 DIVIDE BY N ASSEMBLY
÷ 10
÷4
DIVIDE BY N
DIVIDE N REGISTER
N CONTROL
(14) LSYN HI FROM XA14B(11)
(14) LSYN LO FROM XA14B(12)
8 DØ-D7 DATA BUS
CHECK TO XA11(7,7)
A17 TIMING GENERATOR ASSEMBLY
CLOCK
LO SWITCH
TP5
PSEUDO RANDOM SEQUENCE GENERATOR
DEAD TIME GEN
MPX
FROM XA18(1) IMHZ
G.T. EN
A CTR
PRS EN
IMHZ RATE
LONG PRS
SHORT PRS
RES C
RES B
RES A
GATE TIME GEN
INPUT REGISTER
FROM LTIM WTR (9) XA14B(7)
SAMPLE RATE
(2) IMΩ POT
END PRS
OUTPUT BUFFER
END GT
END SR
(8) LTIMRD
3 DØ,D1,D2
DØ-D5 DATA BUS
(2) LFM
FROM S3 (REAR PANEL) FM SWITCH
A13 COUNTER ASSEMBLY
LIF GATE
DIRECT/I SELECT
LCTR W
FROM XA14B(3)
DIRECT B
LDIR GATE (5)
LINE

5342A DETAILED BLOCK DIAGRAM

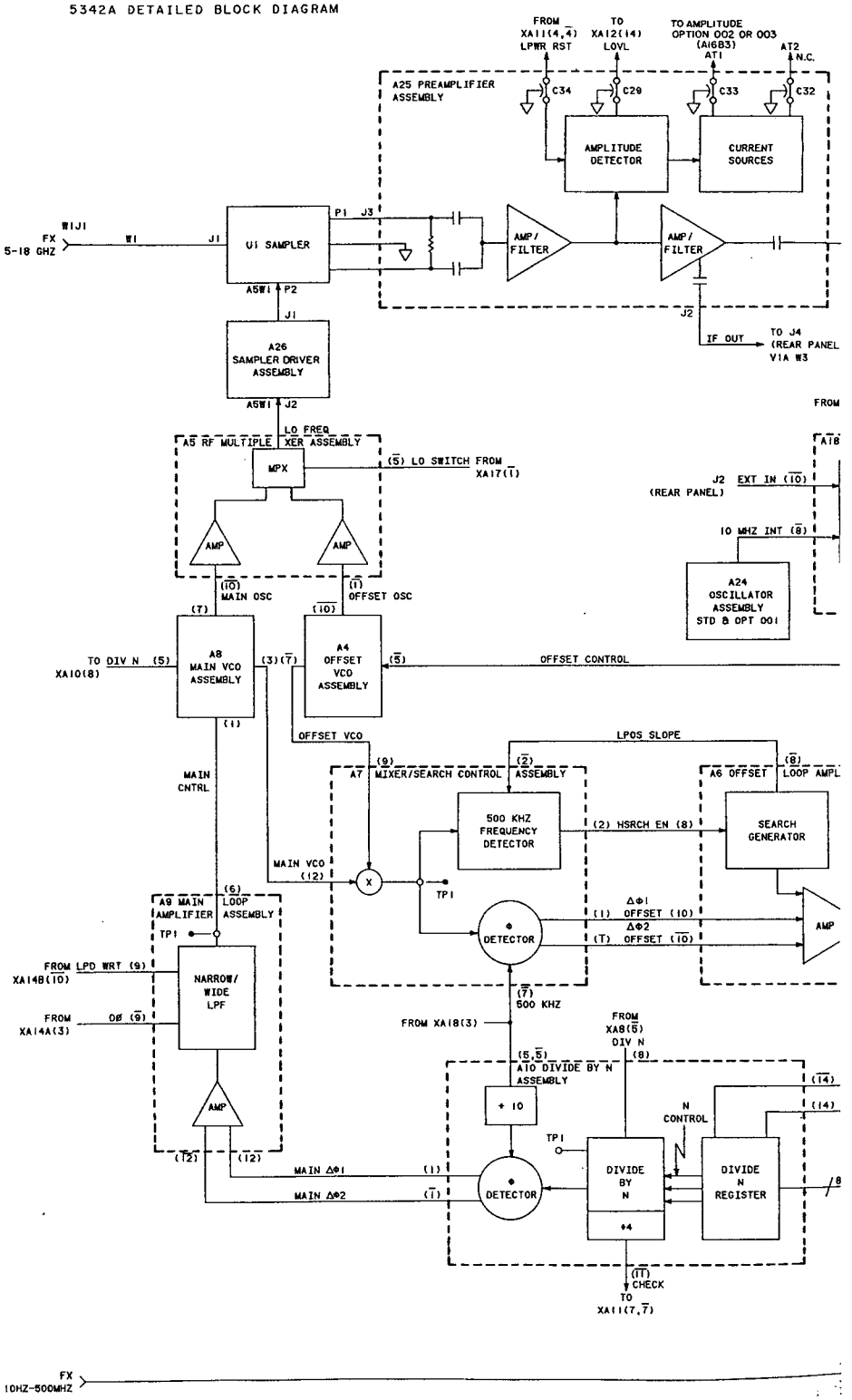

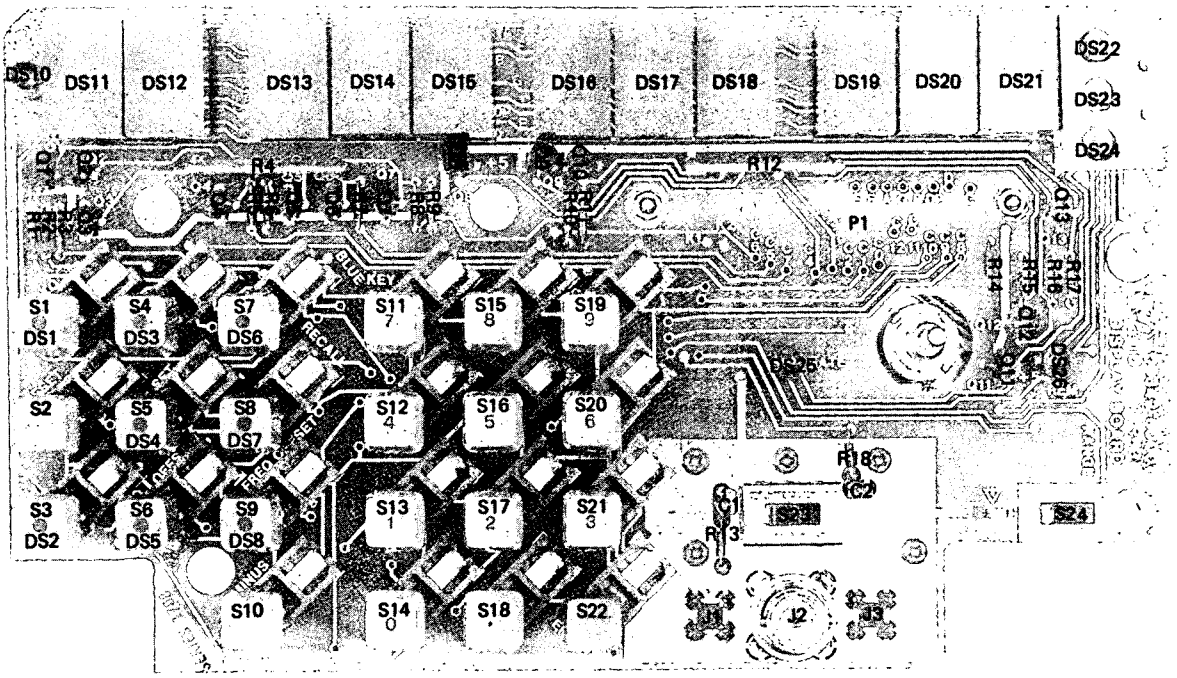

A1

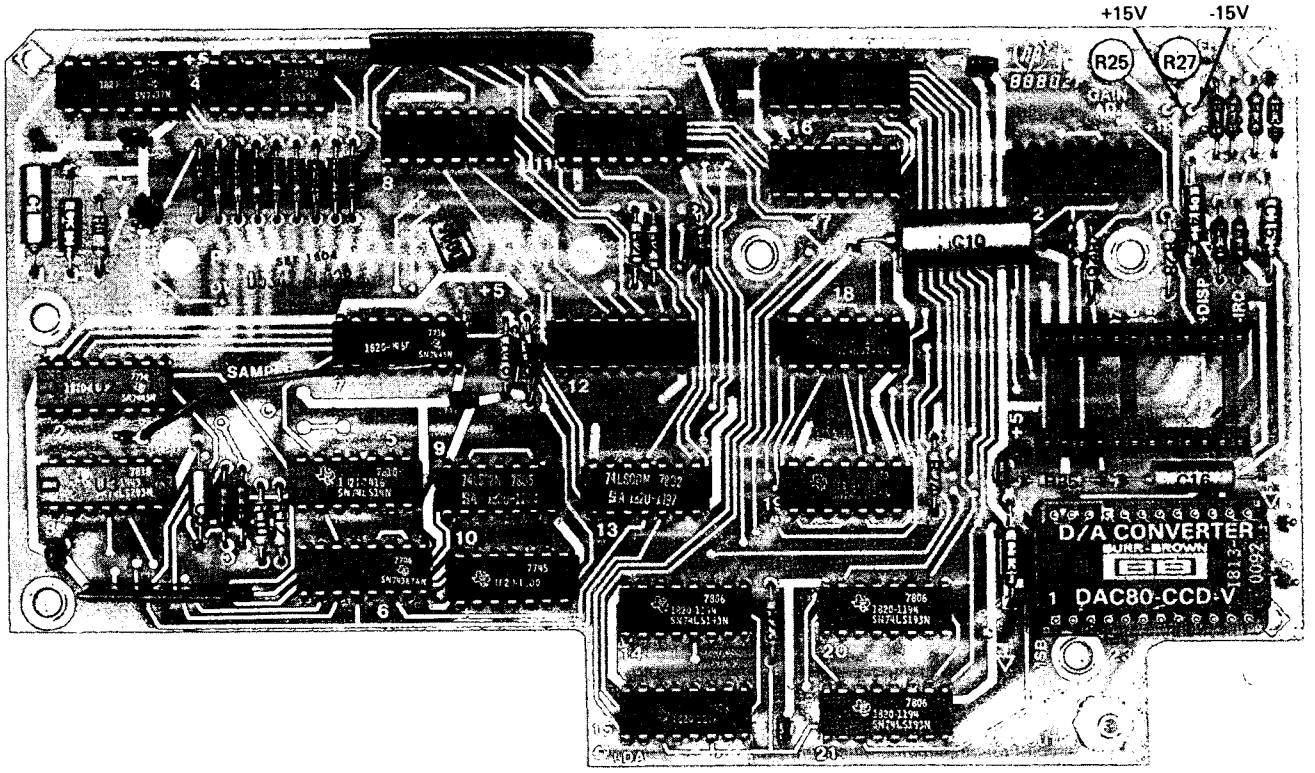

A2

Part of Figure 8-24. A1 Display Assembly and A2 Display Drive Assembly

Figure 8-24
A1 DISPLAY ASSEMBLY AND A2 DISPLAY DRIVE ASSEMBLY

(See Page 8-149)

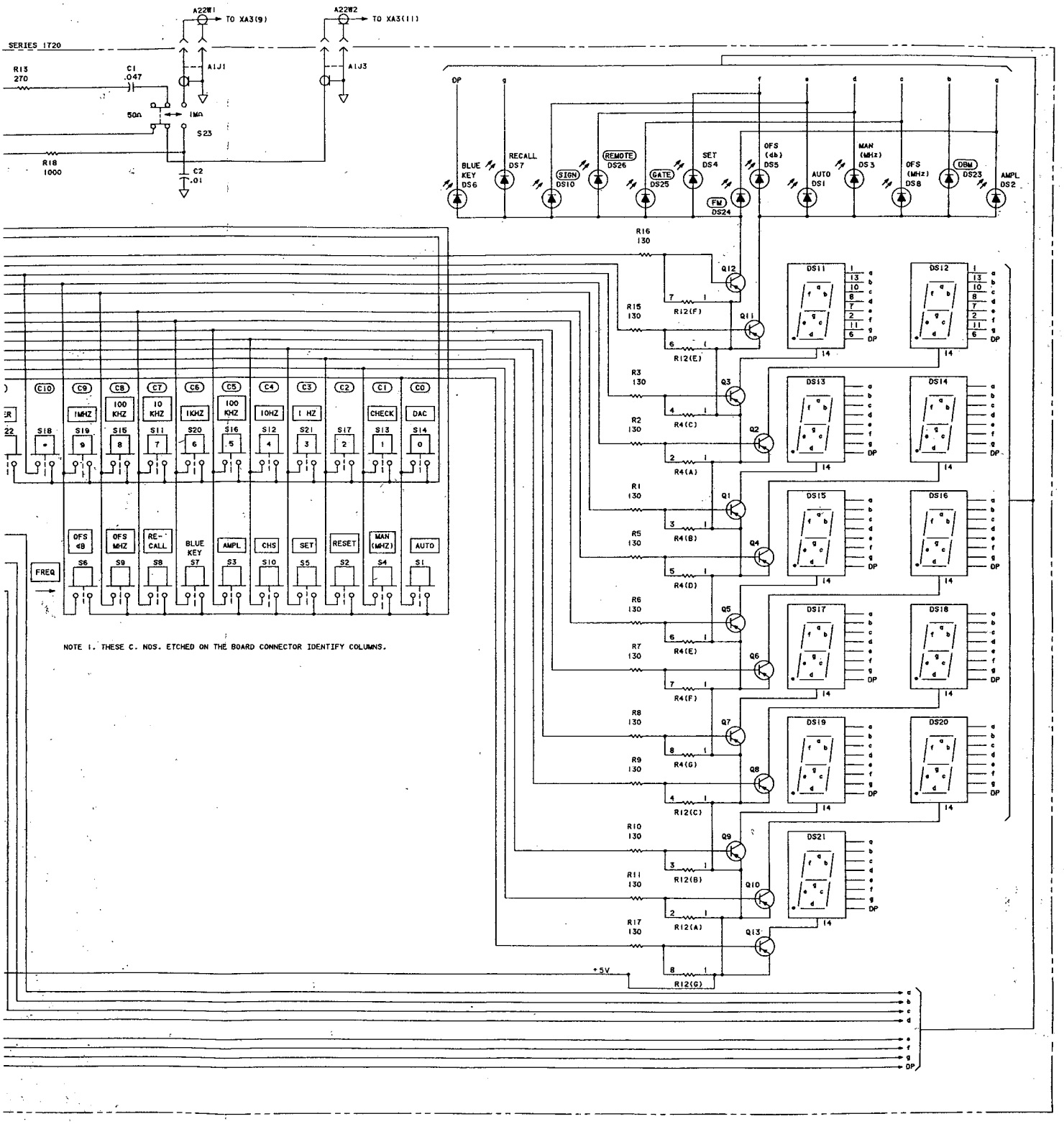

Figure 8-24. A1 Display Assembly and A2 Assembly Driver Assembly

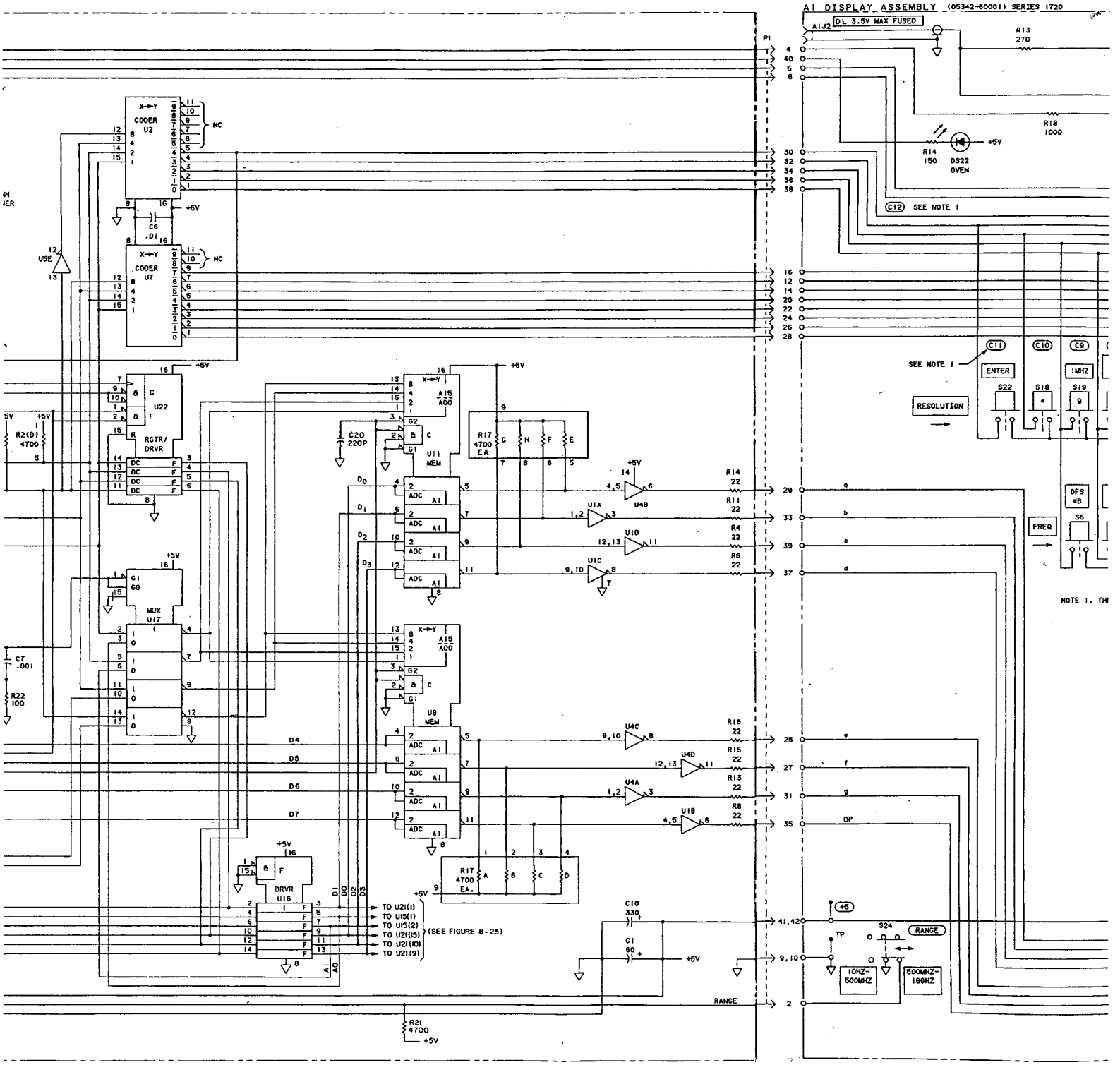
A1 DISPLAY ASSEMBLY (05342-60001) SERIES 1720
DL 3.5V MAX FUSED
A1J2
P1
R13 270
R18 1000
R14 150
DS22 OVEN
+5V
C12 SEE NOTE 1
C11
C10
C9
SEE NOTE 1
ENTER
1MHZ
S22
S18
S19
RESOLUTION
OFS dB
S6
FREQ
NOTE 1. THI
CODER U2
CODER U7
NC
C6 .01
U5E
U22
RGTR/ DRVR
R2(D) 4700
MUX U17
C7 .001
R22 100
U11 MEM
U8 MEM
A15 A00
C20 220P
R17 4700 EA.
U1A
U1B
U1C
U4A
U4B
U4C
U4D
U1D
R14 22
R11 22
R4 22
R6 22
R16 22
R15 22
R13 22
R8 22
D4
D5
D6
D7
DRVR U16
TO U21(1)
TO U15(1)
TO U15(2)
TO U21(15)
TO U21(10)
TO U21(9)
(SEE FIGURE 8-25)
C10 330
C1 60
S24
RANGE
TP
10HZ-500MHZ
500MHZ-18GHZ
R21 4700
DP

PUT IMPEDANCE SELECT

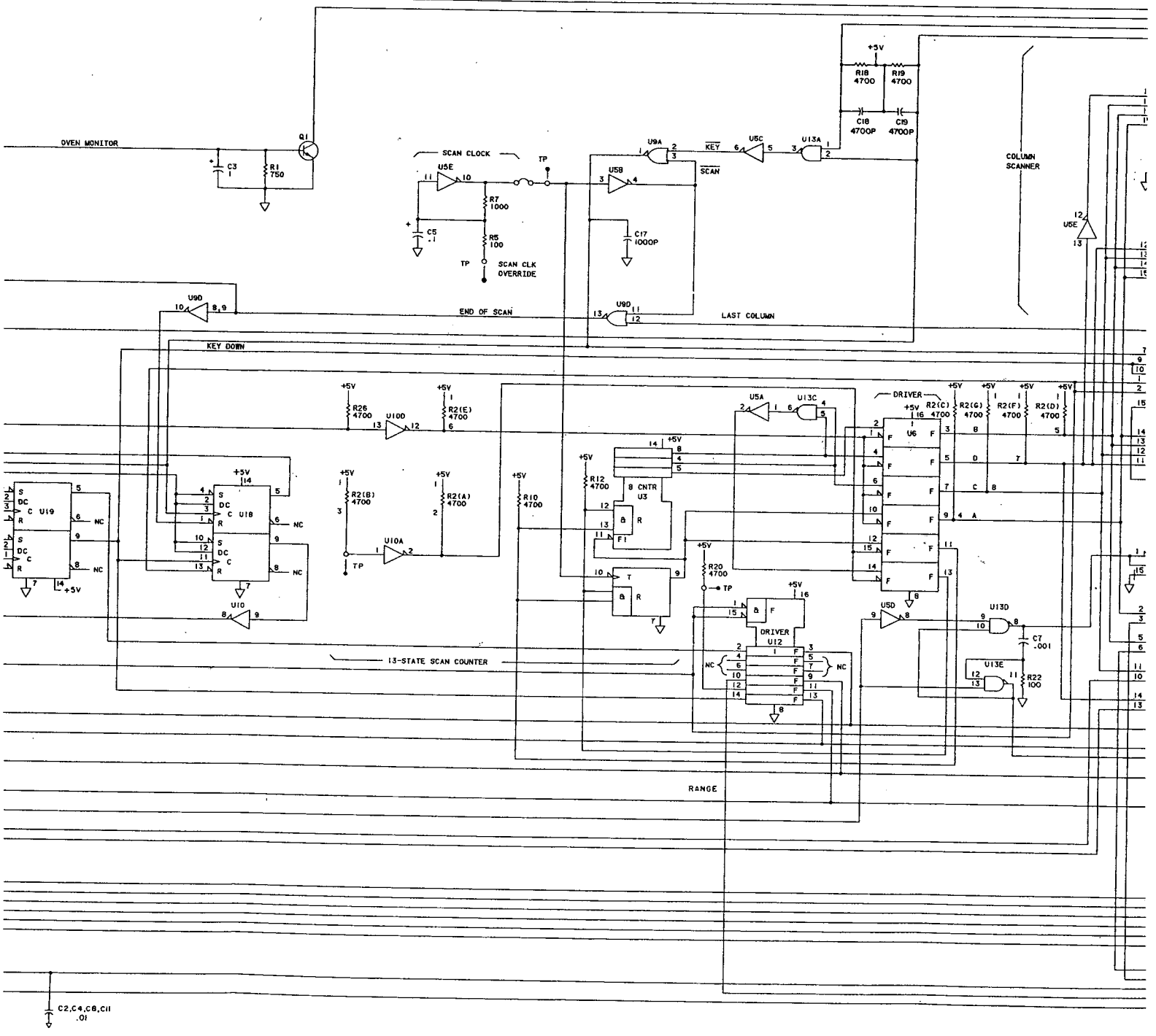

A2
C1-C20
Q1
R1-R35
TP1
U1-U22

Deleted:
C12, C14, C19
R23, R25, R34
U14, U15,
U20, U21

S

R OR INDUSTRY ART NUMBER
MPS6562
SN7437N
SN7445N
SN74LS293N
SN74LS14N
DM8097N
DM7489N
9L302PC
SN74LS05N
DM8095N
SN74LS00N
SN74LS158N
SN74LS74N
DM74LS173N

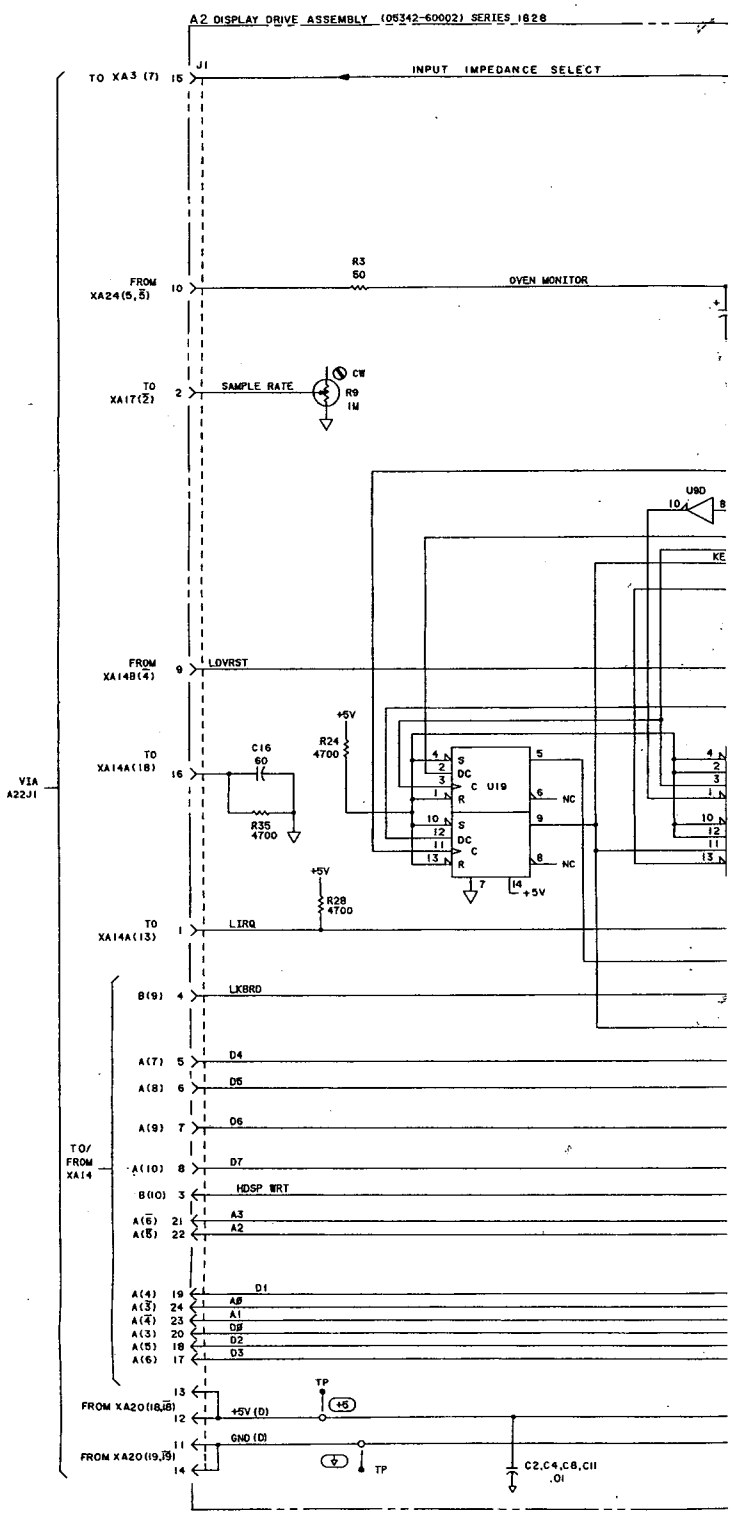

REFERENCE DESIGNATIONS

A1
C1, C2
DS1-DS26
J1-J3
Q1-Q13
R1-R18
S1-S24
TP1-TP2

Deleted: DS9

A2
C1-C20
Q1
R1-R35
TP1
U1-U22

Deleted:
C12, C14, C19
R23, R25, R34
U14, U15,
U20, U21

TABLE OF ACTIVE ELEMENTS

REFERENCE DESIGNATION	HP PART NUMBER	MFR OR INDUSTRY PART NUMBER
A1Q1-Q13	1853-0318	MPS6562
A2		
U1, U4	1820-0539	SN7437N
U2, U7	1820-0468	SN7445N
U3	1820-1443	SN74LS293N
U5	1820-1416	SN74LS14N
U6	1820-1049	DM8097N
U8, U11	1820-0428	DM7489N
U9	1820-1144	9L302PC
U10	1820-1200	SN74LS05N
U12, U16	1820-1254	DM8095N
U13	1820-1197	SN74LS00N
U17	1820-1428	SN74LS158N
U18, U19	1820-1112	SN74LS74N
U22	1820-1885	DM74LS173N

Deleted: U14, U15, U20, U21

Figure 8-25
OPTION 004 DISPLAY DRIVER ADDITIONS ON A2 ASSEMBLY

(See Page 8-151)

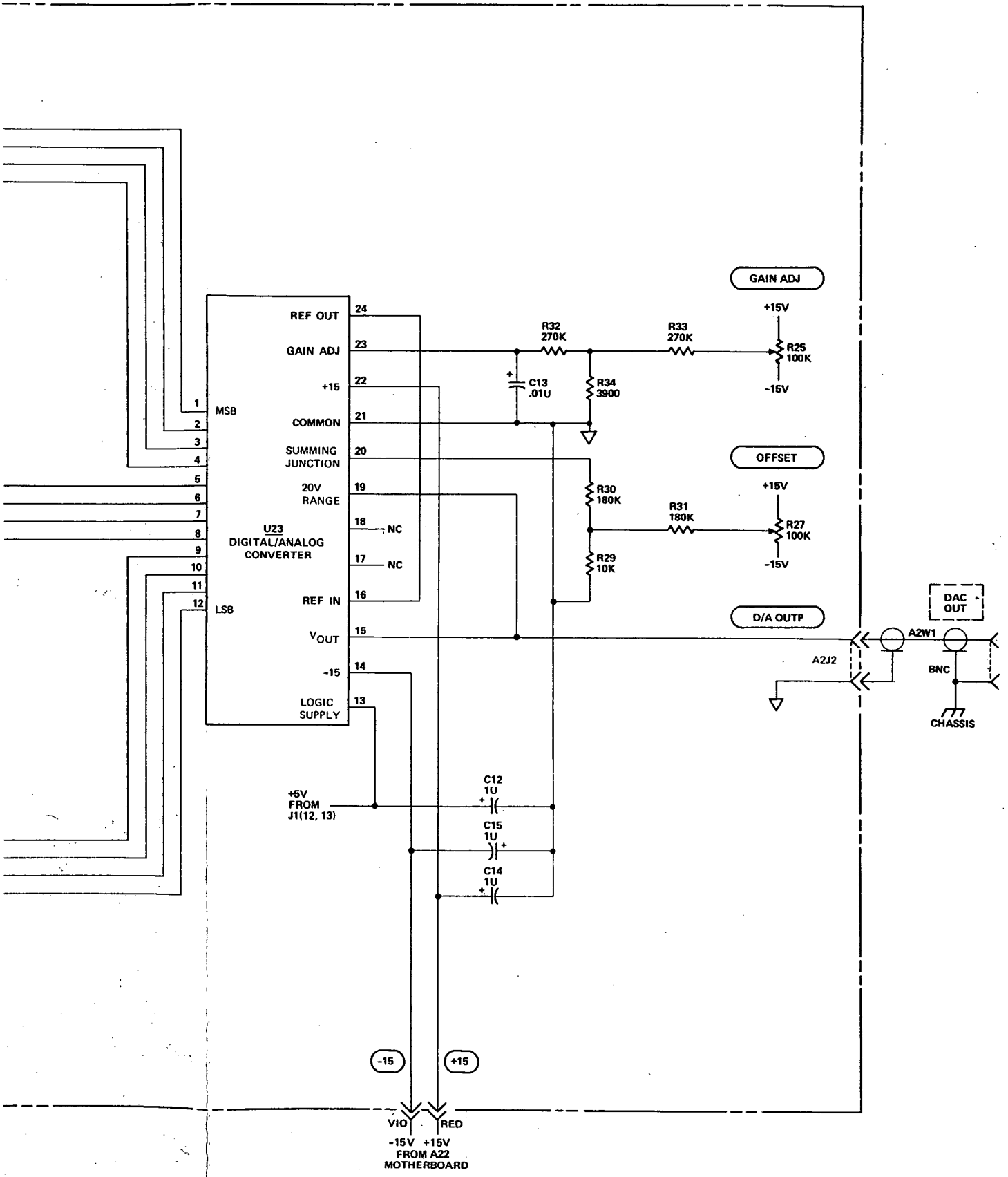

Figure 8-25. Option 004 Display Driver Additions on A2 Assembly

A2 DISPLAY DRIVER ASSEMBLY (05342-60028) ADDITIONS FOR OPTION 004

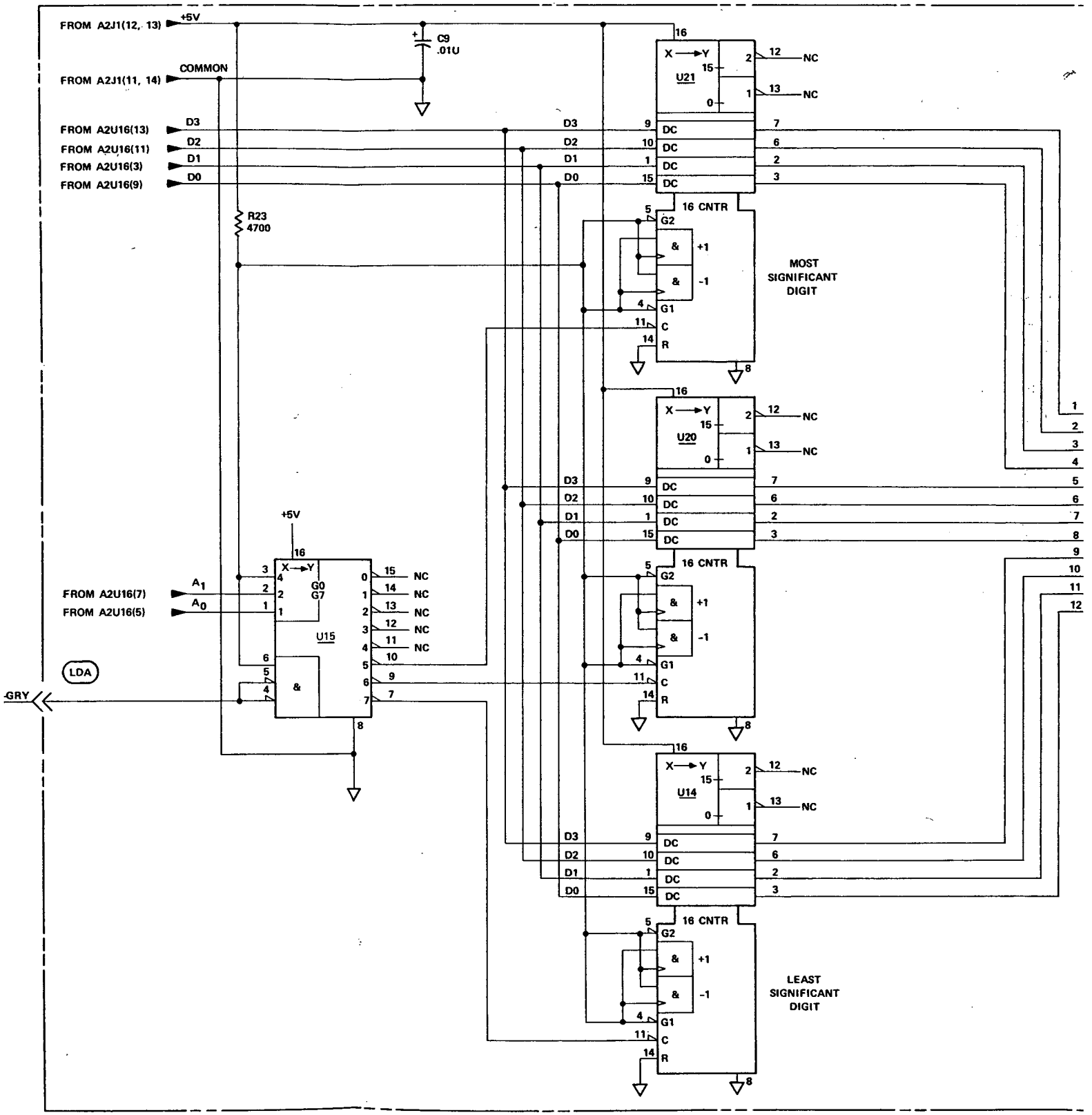

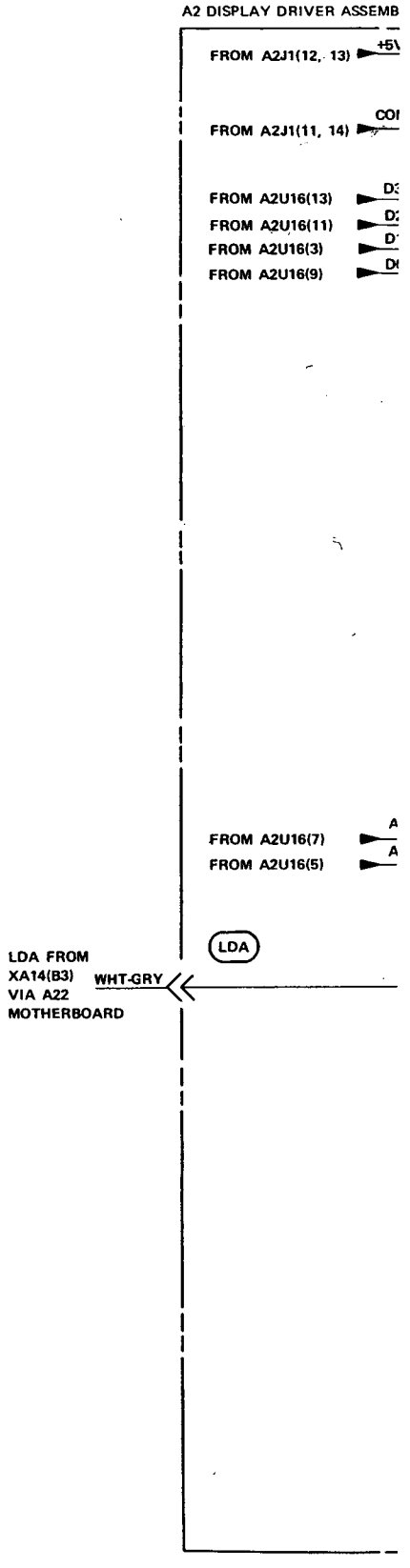
A2 DISPLAY DRIVER ASSEMB
FROM A2J1(12, 13)
+5\
FROM A2J1(11, 14)
COI
FROM A2U16(13)
D:
FROM A2U16(11)
D:
FROM A2U16(3)
D'
FROM A2U16(9)
D
FROM A2U16(7)
A
FROM A2U16(5)
A
LDA
LDA FROM
XA14(B3)
VIA A22
MOTHERBOARD
WHT-GRY

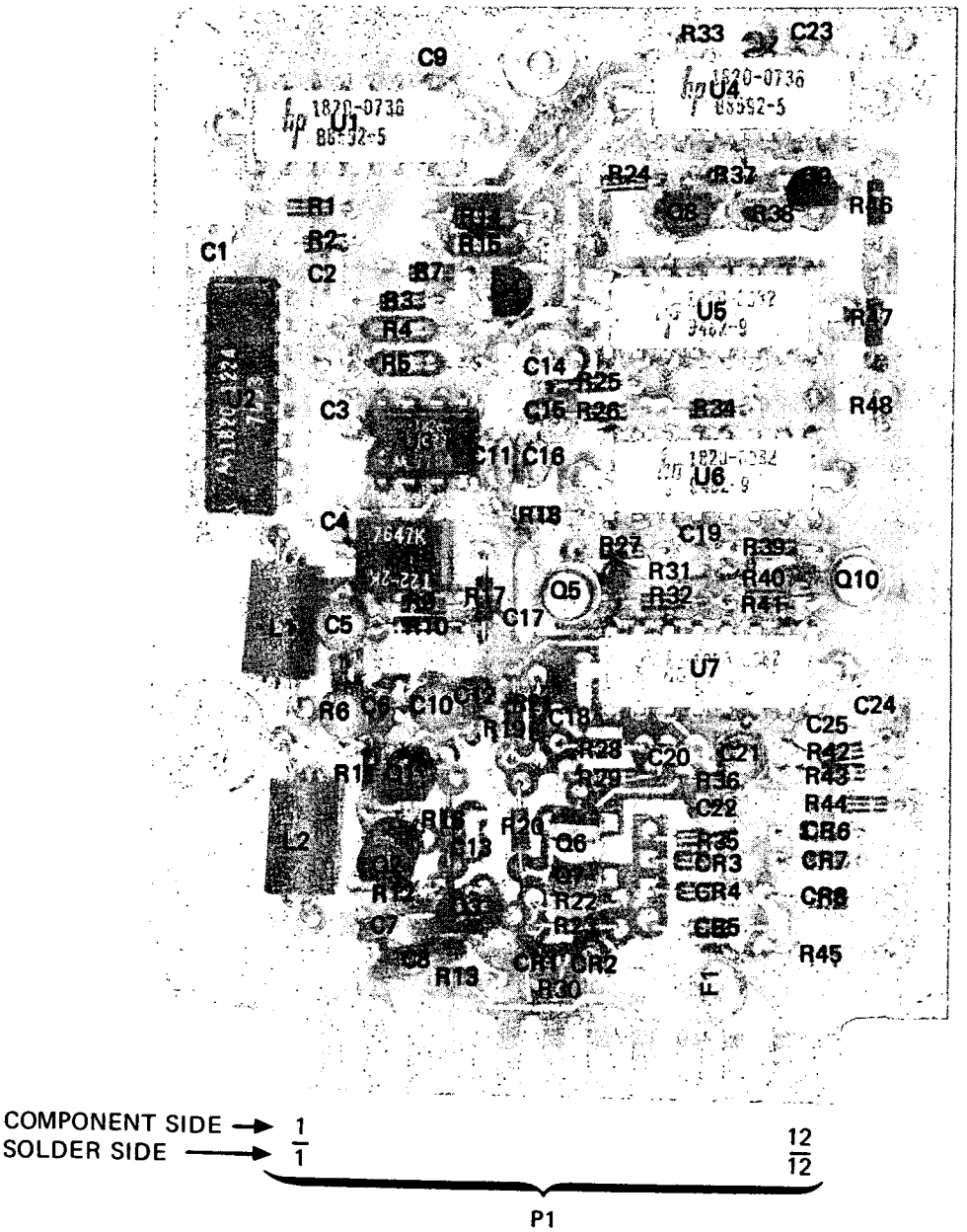

COMPONENT SIDE → 1 ... 12
SOLDER SIDE → 1 ... 12

Part of Figure 8-26. A3 Direct Count Amplifier Assembly

Figure 8-26
A3 DIRECT COUNT AMPLIFIER ASSEMBLY

(See Page 8-153)

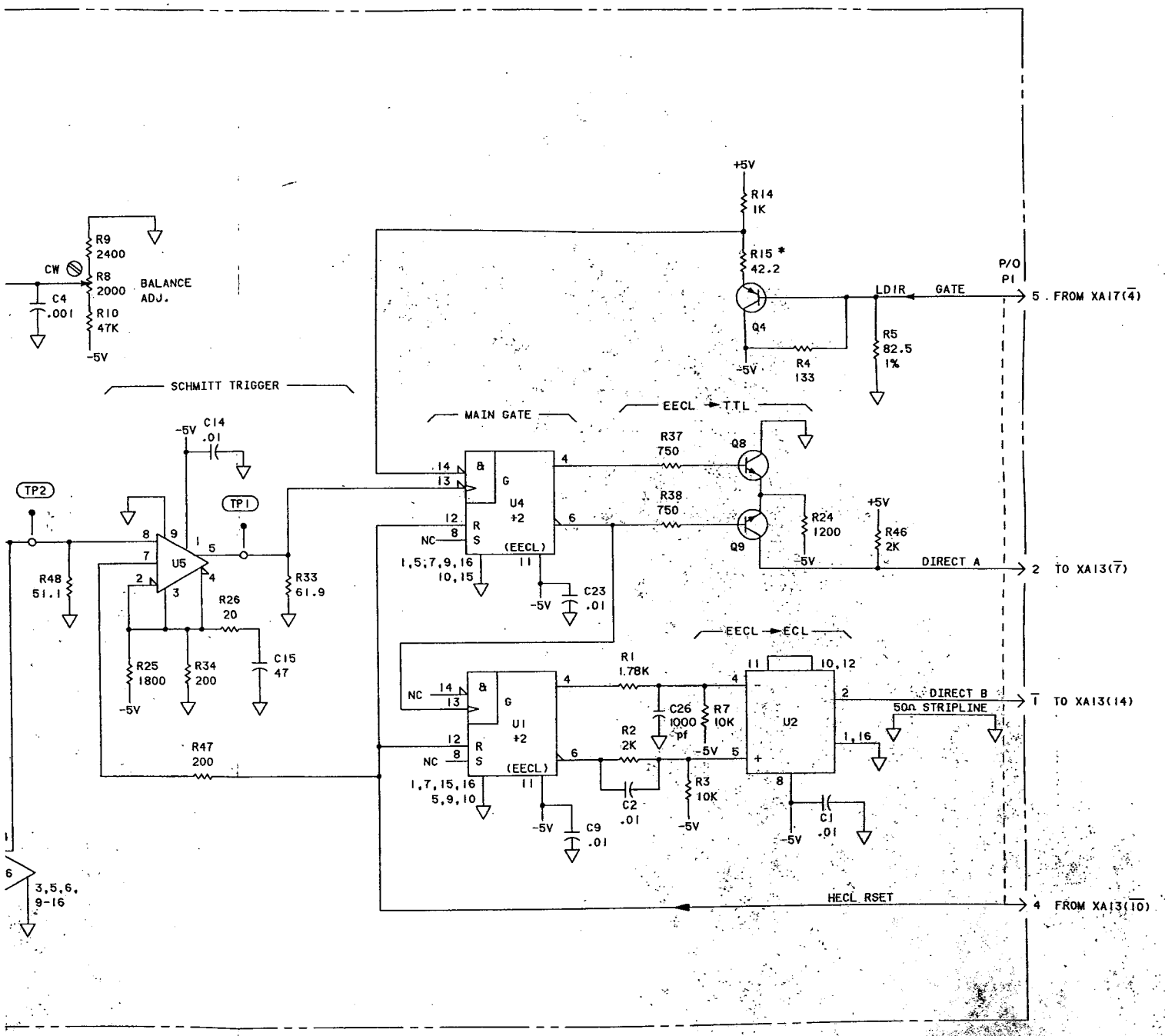

Figure 8-26. A3 Direct Count Amplifier Assembly

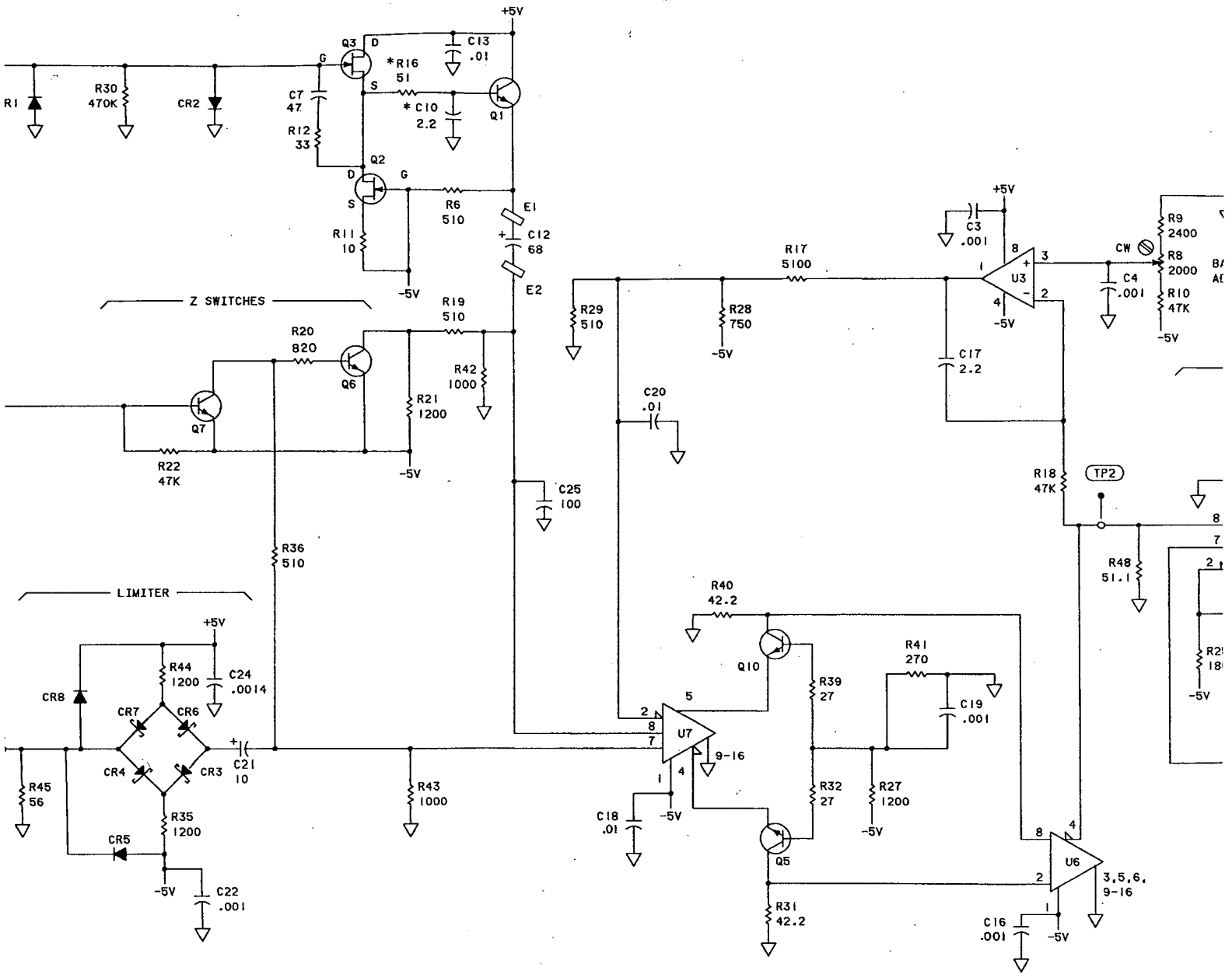
+5V
Q3
D
G
S
*R16
51
C13
.01
*C10
2.2
Q1
R1
R30
470K
CR2
C7
47
R12
33
Q2
D
G
S
R6
510
R11
10
-5V
E1
C12
68
E2
Z SWITCHES
R19
510
R20
820
Q6
Q7
R21
1200
R42
1000
R22
47K
-5V
C25
100
R36
510
LIMITER
+5V
R44
1200
C24
.0014
CR8
CR7
CR6
CR4
CR3
C21
10
R45
56
R35
1200
CR5
-5V
C22
.001
R43
1000
R29
510
R28
750
-5V
R17
5100
+5V
C3
.001
U3
CW
R9
2400
R8
2000
R10
47K
C4
.001
-5V
C17
2.2
C20
.01
R18
47K
TP2
R48
51.1
R40
42.2
Q10
R39
27
R41
270
C19
.001
U7
9-16
R32
27
R27
1200
C18
.01
-5V
Q5
R31
42.2
U6
3,5,6,
9-16
C16
.001
-5V

REFERENCE DESIGNATIONS

A3
C1-C25
CR1-CR8
E1, E2
F1
L1, L2
Q1-Q10
R1-R48
U1-U7

TABLE OF ACTIVE ELEMENTS

REFERENCE DESIGNATION	HP PART NUMBER	MFG OR INDUSTRY PART NUMBER
CR1, CR2	1901-0040	Same
CR6, CR7	1901-0535	Same
CR5, CR8	1901-0050	Same
Q1	1854-0215	SPS3411
Q2, Q3	1855-0081	2N5245
Q4	1853-0015	Same
Q5, Q10	1854-0546	Same
Q6, Q7, Q8, Q9	1854-0071	Same
U1, U4	1820-0736	Same
U2	1820-1224	MC10214P
U3	1826-0139	MC1458P1
U5, U6, U7	1820-0982	Same

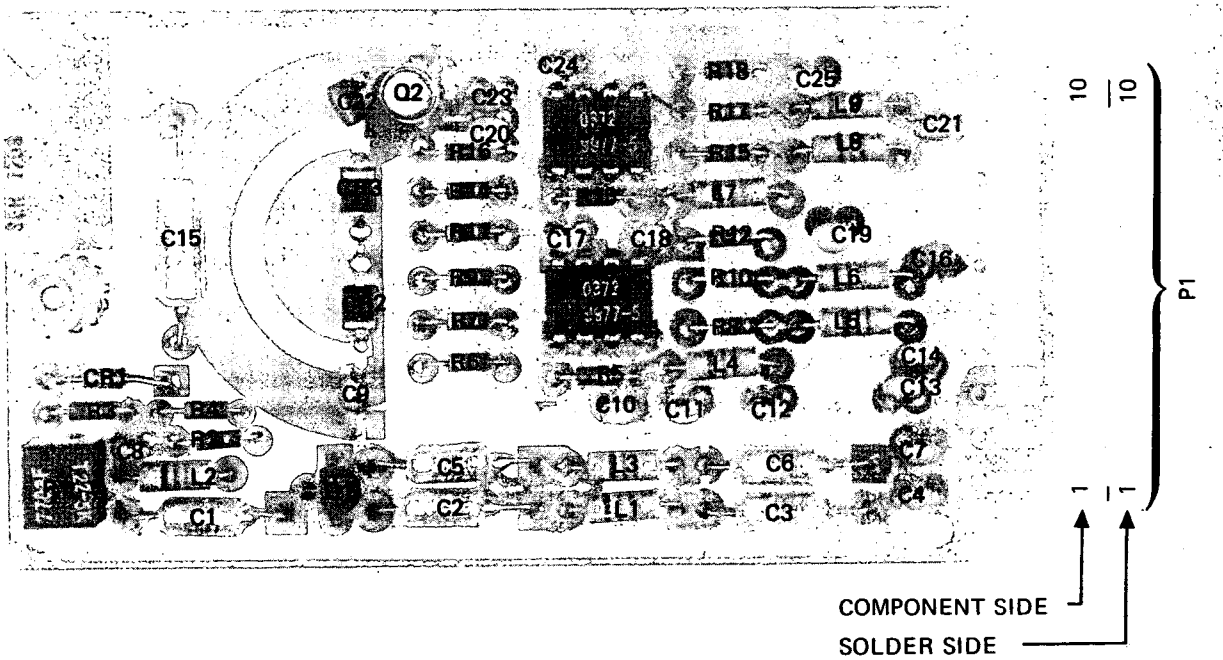

Part of Figure 8-27. A4 Offset VCO Assembly

Figure 8-27
A4 OFFSET VCO ASSEMBLY

(See Page 8-155)

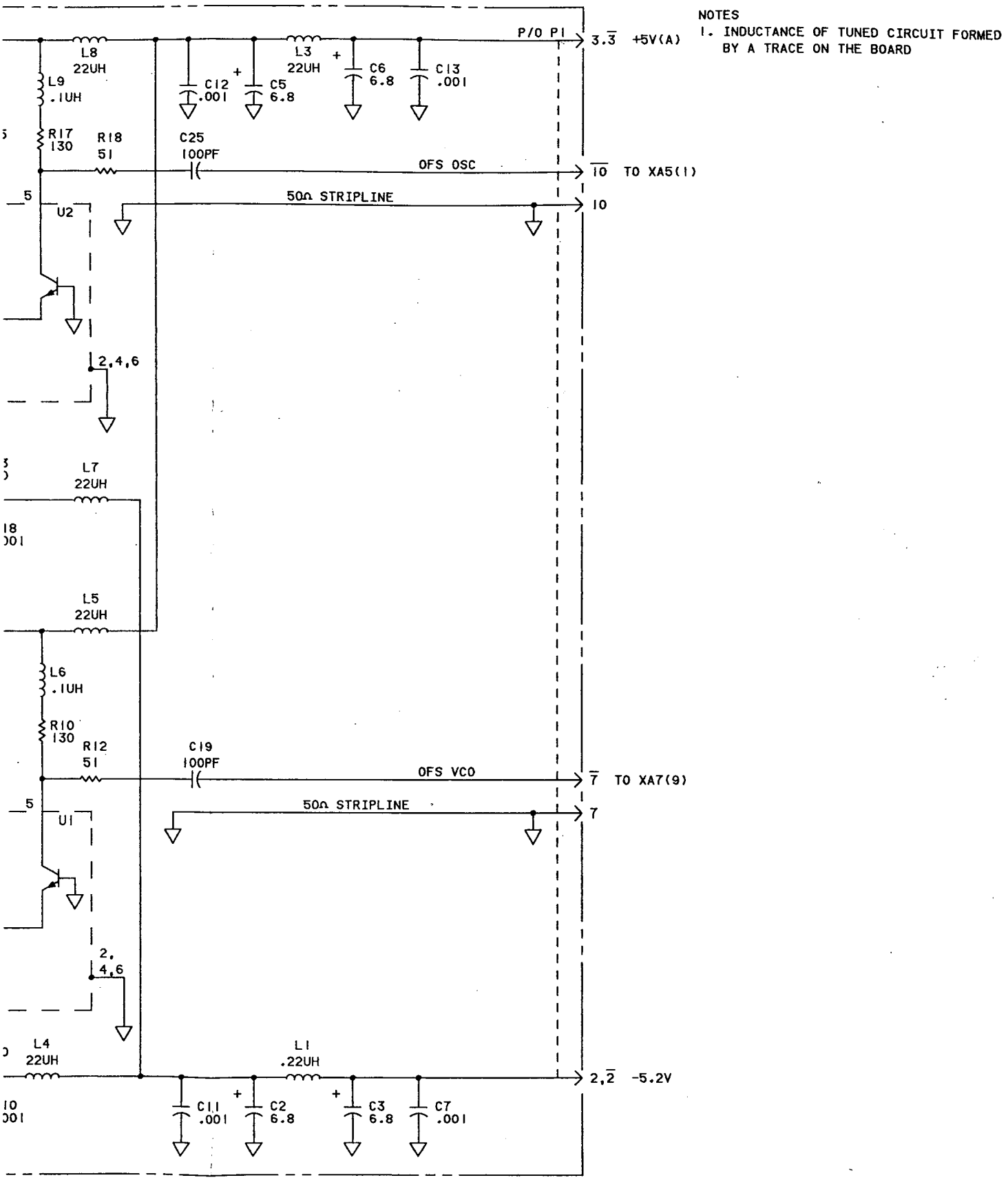

Figure 8-27. A4 Offset VCO Assembly

CO ASSEMBLY (05342-60004) SERIES 1708

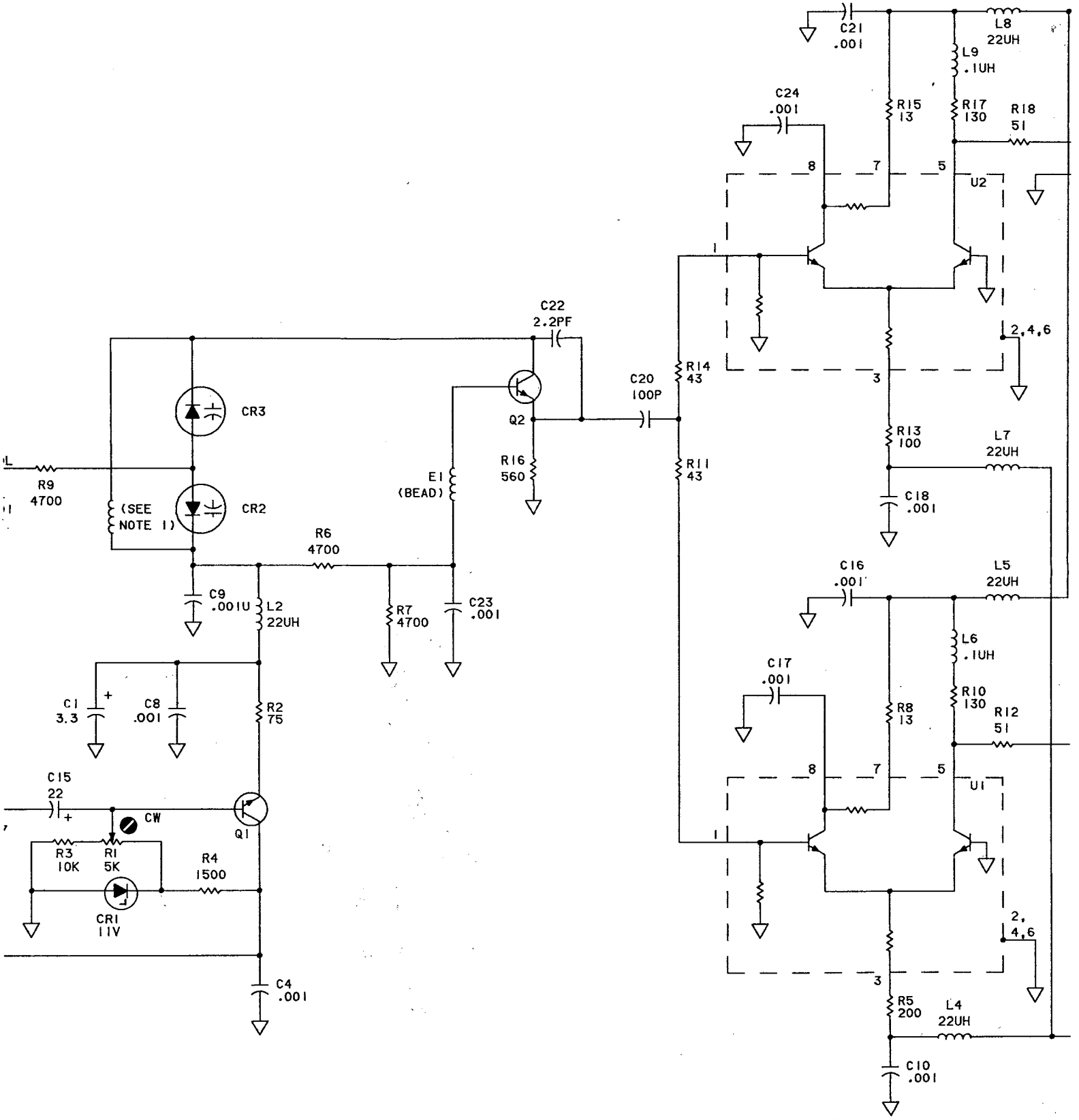

REFERENCE DESIGNATIONS

A4
C1-C25
CR1-CR3
E1
L1-L9
Q1, Q2
R1-R18
U1, U2

TABLE OF ACTIVE ELEMENTS

REFERENCE DESIGNATION	HP PART NUMBER	MFR OR INDUSTRY PART NUMBER
CR1	1902-3171	FZ7264
CR2, CR3	0122-0065	Same
Q1	1854-0071	Same
Q2	1854-0345	2N5179
U1, U2	1826-0732	Same

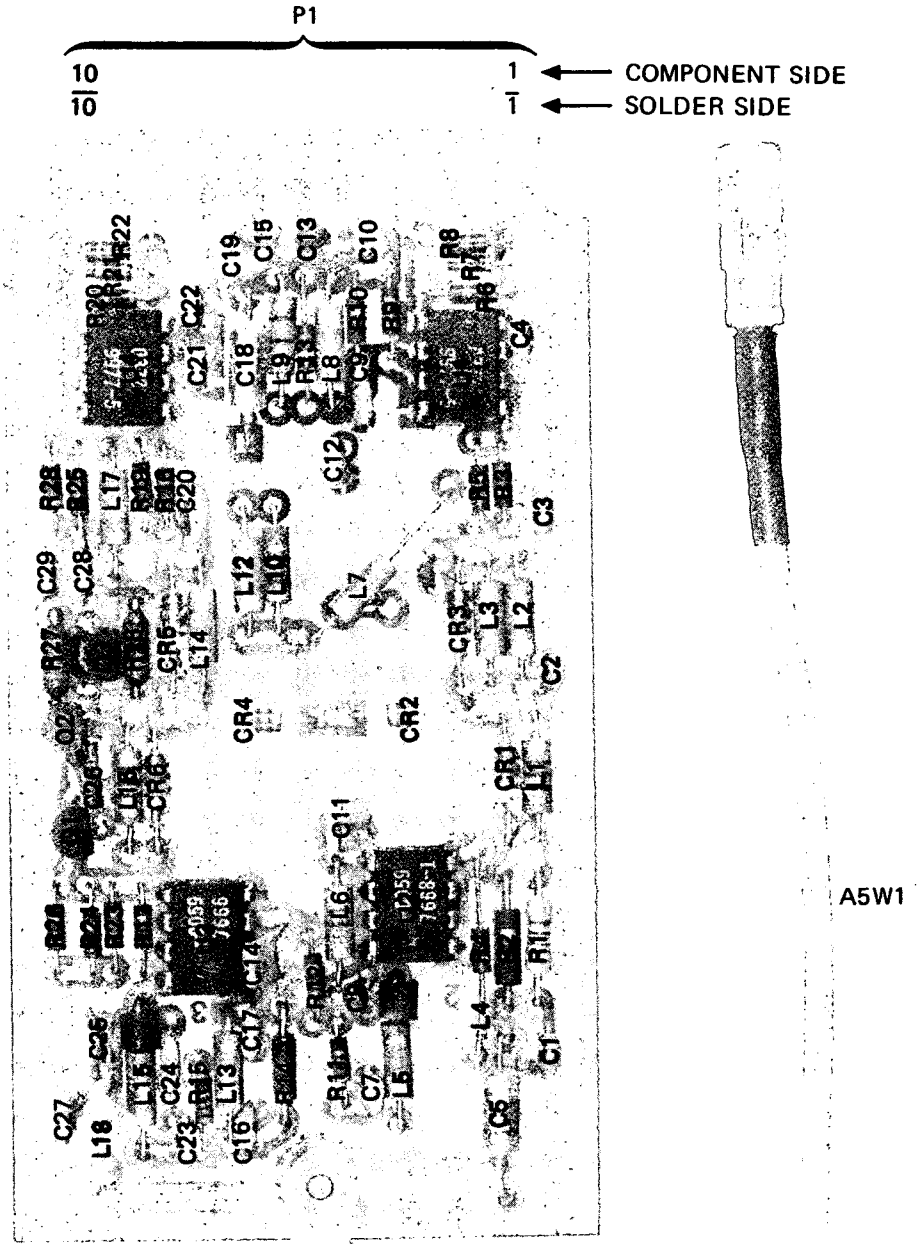

Part of Figure 8-28. A5 RF Multiplexer Assembly

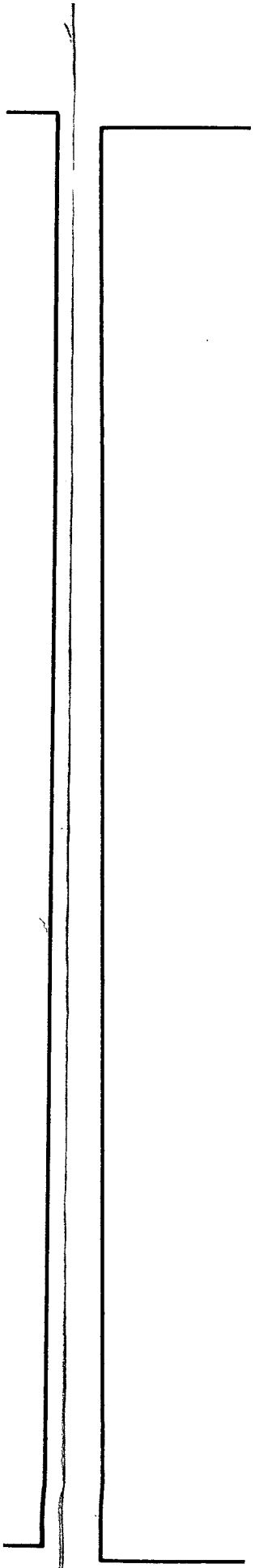

Figure 8-28
A5 RF MULTIPLEXER ASSEMBLY

(See Page 8-157)

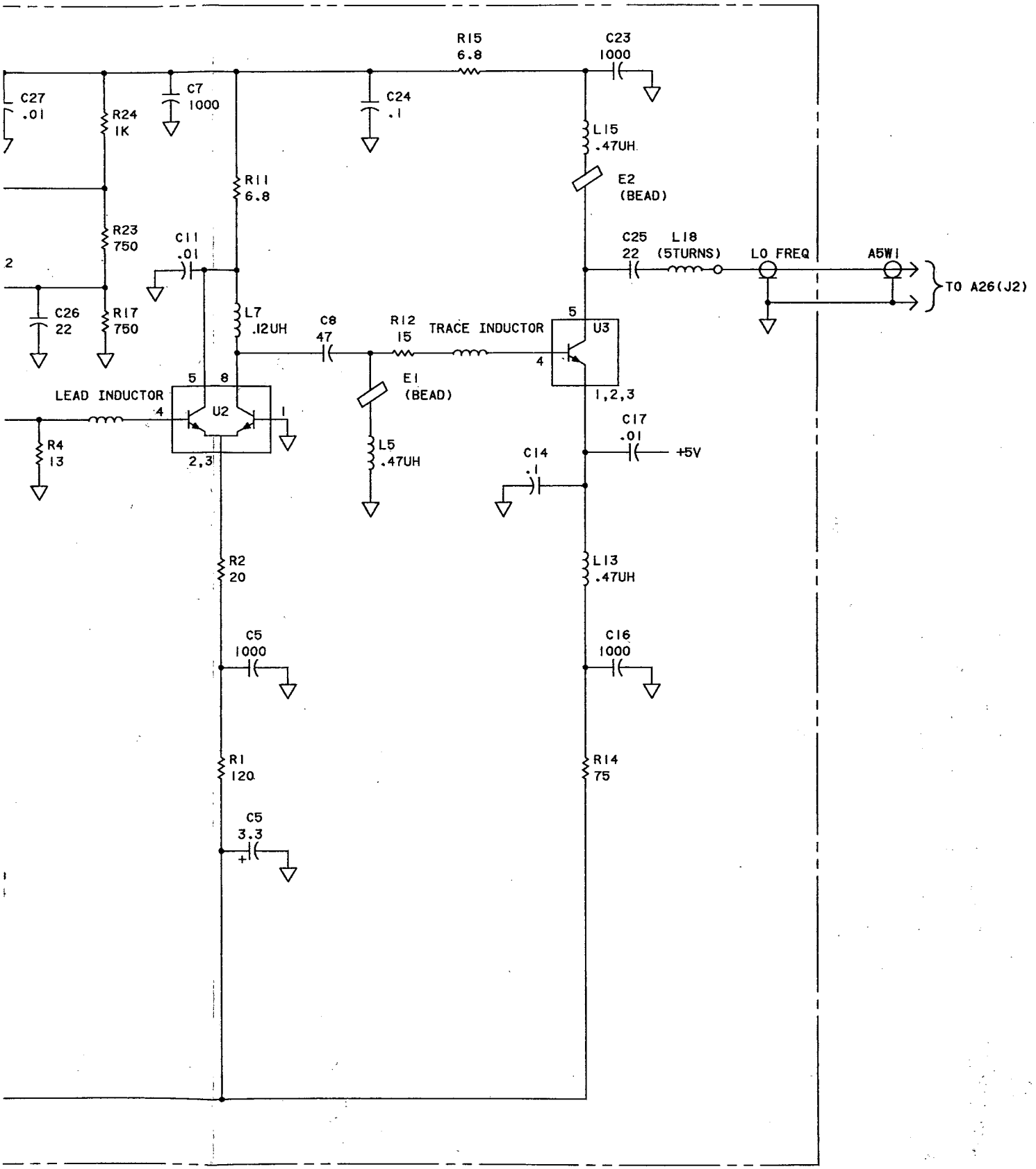

Figure 8-28. A5 RF Multiplexer Assembly

RF MULTIPLEXER ASSEMBLY (05342-60005) SERIES 1720

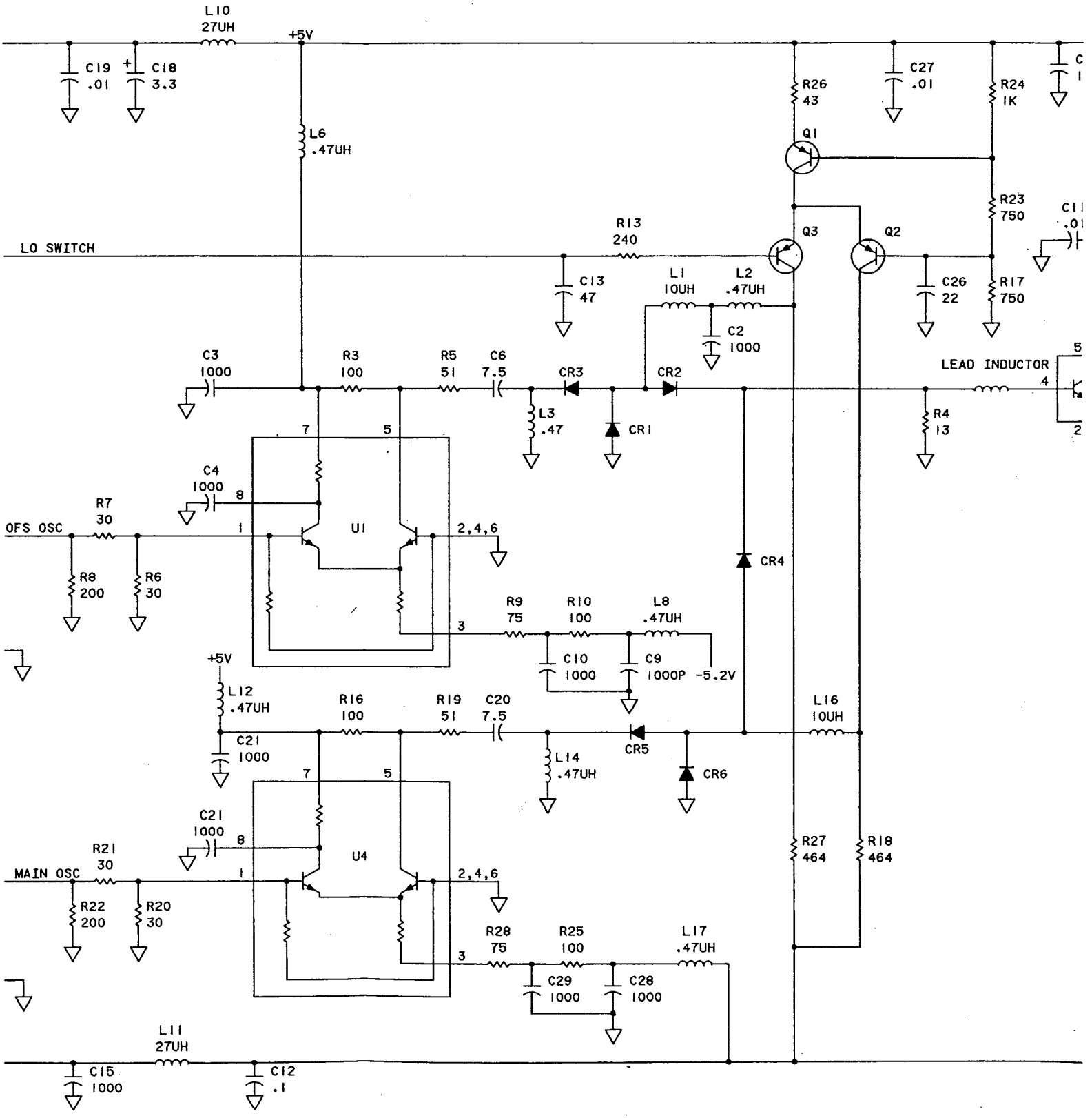

REFERENCE DESIGNATIONS

A5
C1-C29
CR1-CR6
E1, E2
L1-L18
Q1-Q3
R1-R28
U1-U4
W1

TABLE OF ACTIVE ELEMENTS

REFERENCE DESIGNATION	HP PART NUMBER	MFR OR INDUSTRY PART NUMBER
CR1-CR6	1901-0179	Same
Q1-Q3	1853-0058	832248
U1, U4	1826-0372	Same
U2, U3	1858-0059	Same

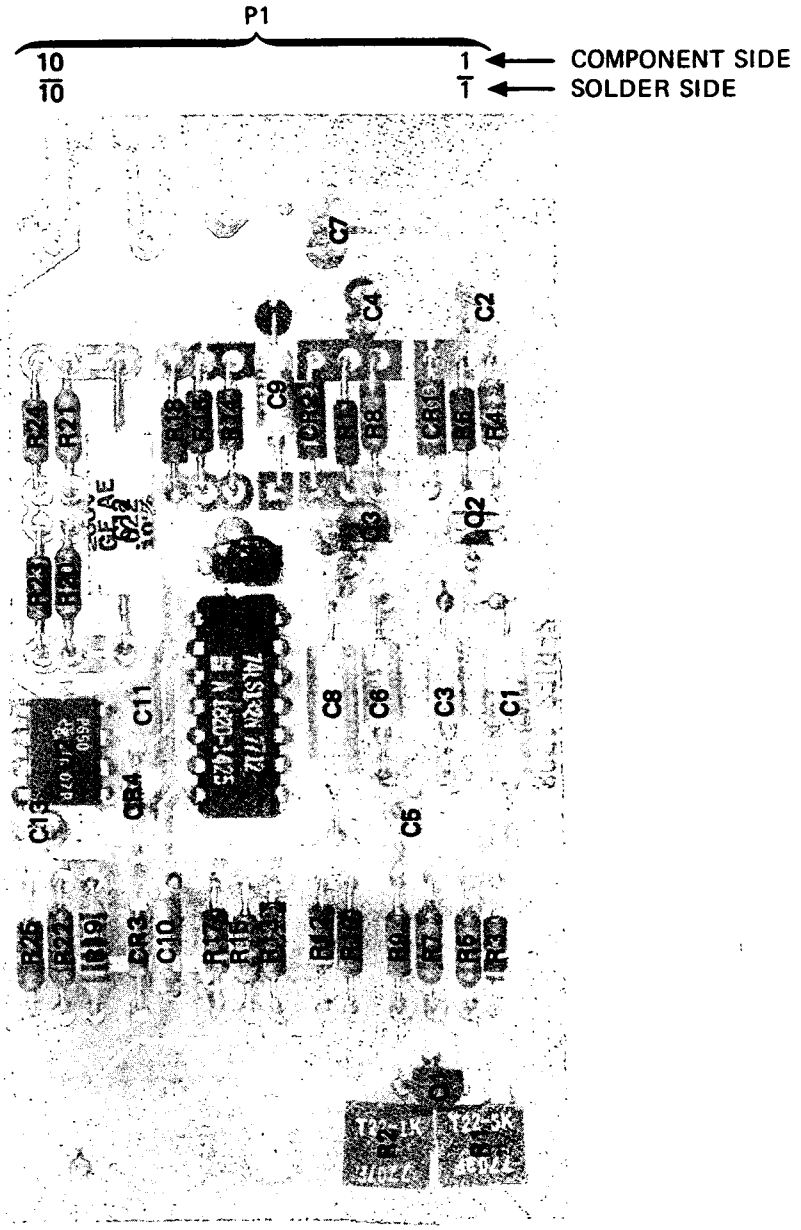

Part of Figure 8-29. A6 Offset Loop Amp/Search Generator Assembly

Figure 8-29
A6 OFFSET LOOP AMP/SEARCH GENERATOR ASSEMBLY

(See Page 8-159)

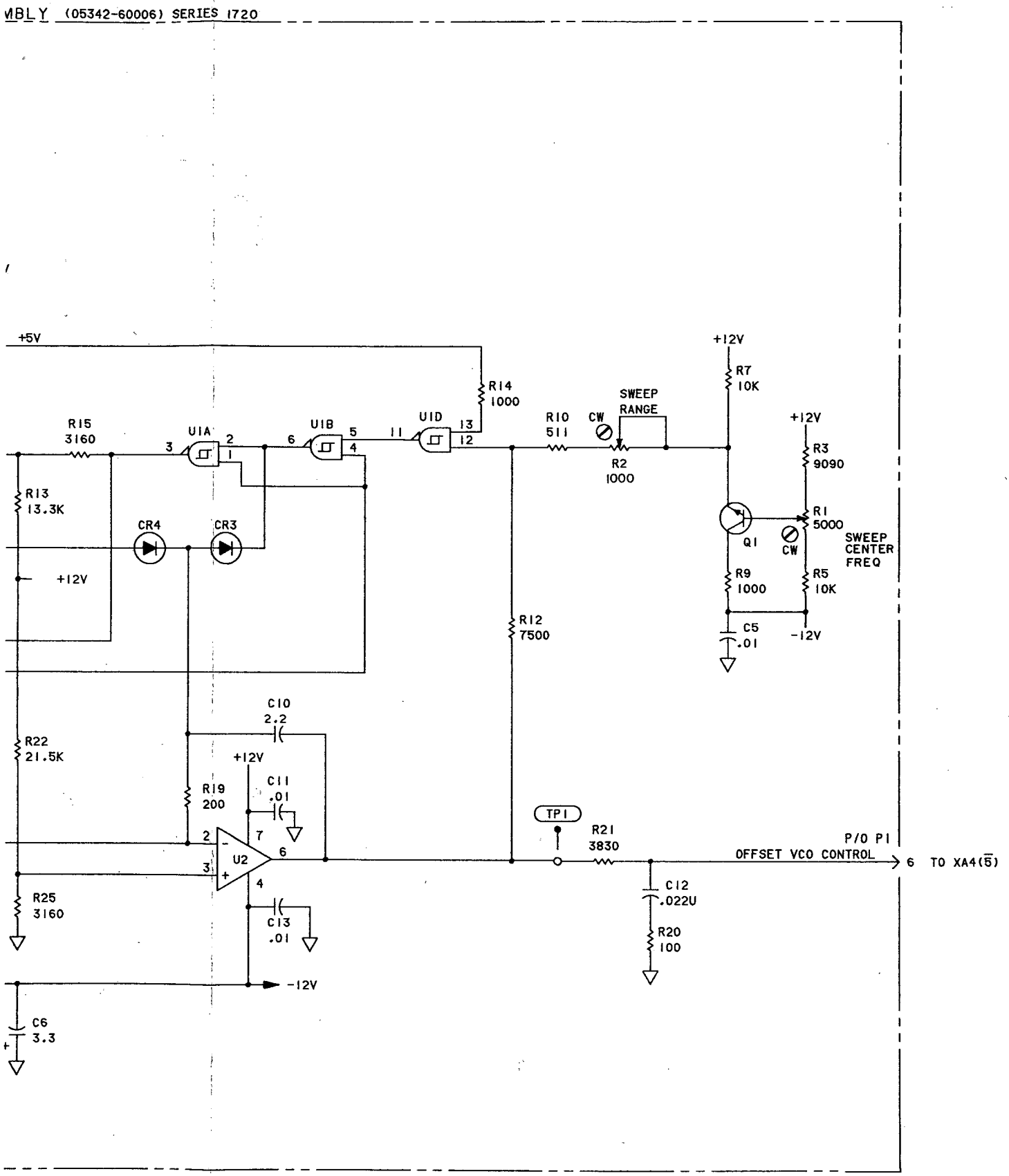

Figure 8-29. A6 Offset Loop Amp/Search Generator Assembly

A6 OFFSET LOOP AMPLIFIER ASSEMBLY (05342-

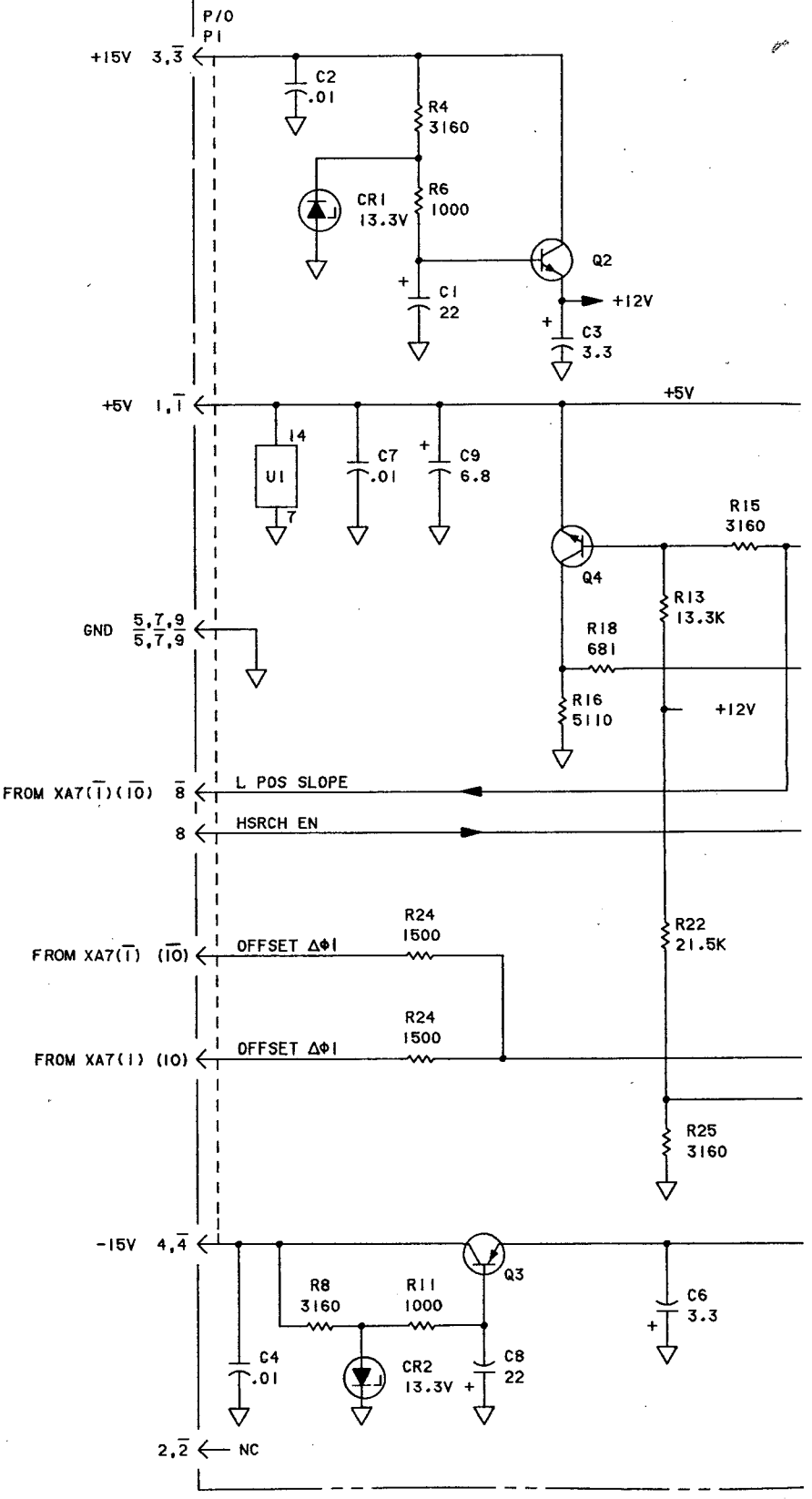

REFERENCE DESIGNATIONS

A6
C1-C13 CR1-CR4 Q1-Q4 R1-R25 U1, U2

TABLE OF ACTIVE ELEMENTS

REFERENCE DESIGNATION	HP PART NUMBER	MFR OR INDUSTRY PART NUMBER
CR1, CR2	1902-3193	F27272
CR3, CR4	1901-0040	Same
Q1, Q3, Q4	1853-0020	Same
Q2	1854-0071	Same
U1	1820-1425	SN74LS132N
U2	1820-0493	LM307N

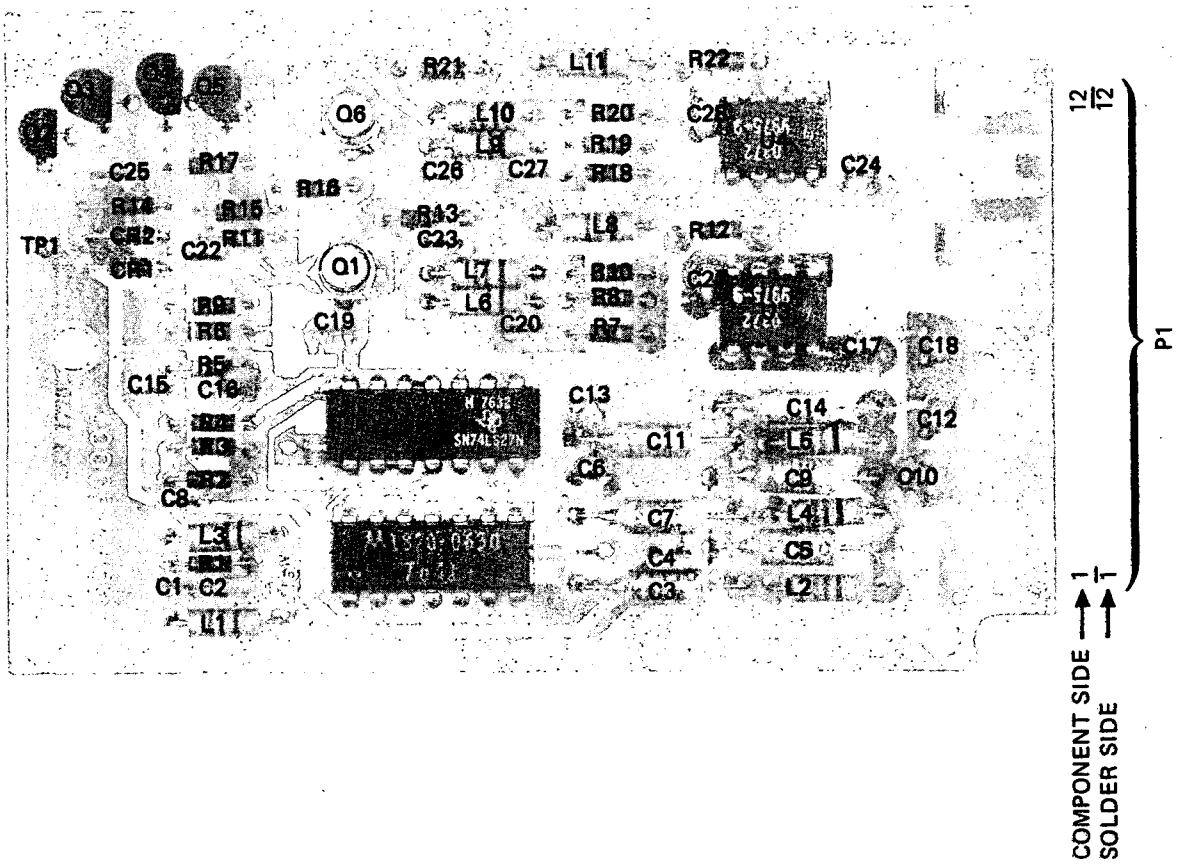

Part of Figure 8-30. A7 Mixer/Search Control Assembly

Figure 8-30
A7 MIXER/SEARCH CONTROL ASSEMBLY

(See Page 8-161)

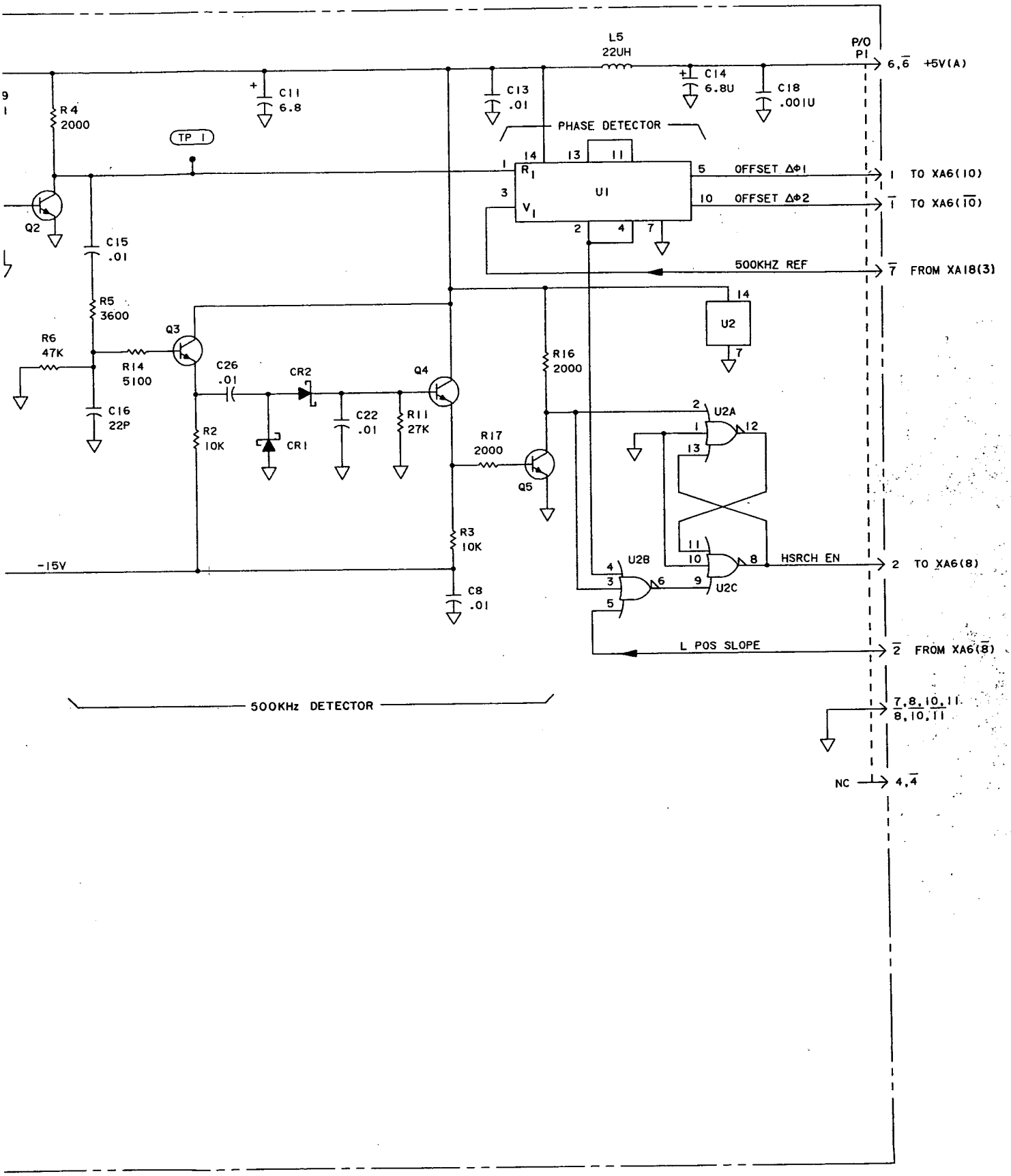

Figure 8-30. A7 Mixer/Search Control Assembly

A7 MIXER/SEARCH CONTROL ASSEMBLY (05342-60007) SERIES 1720

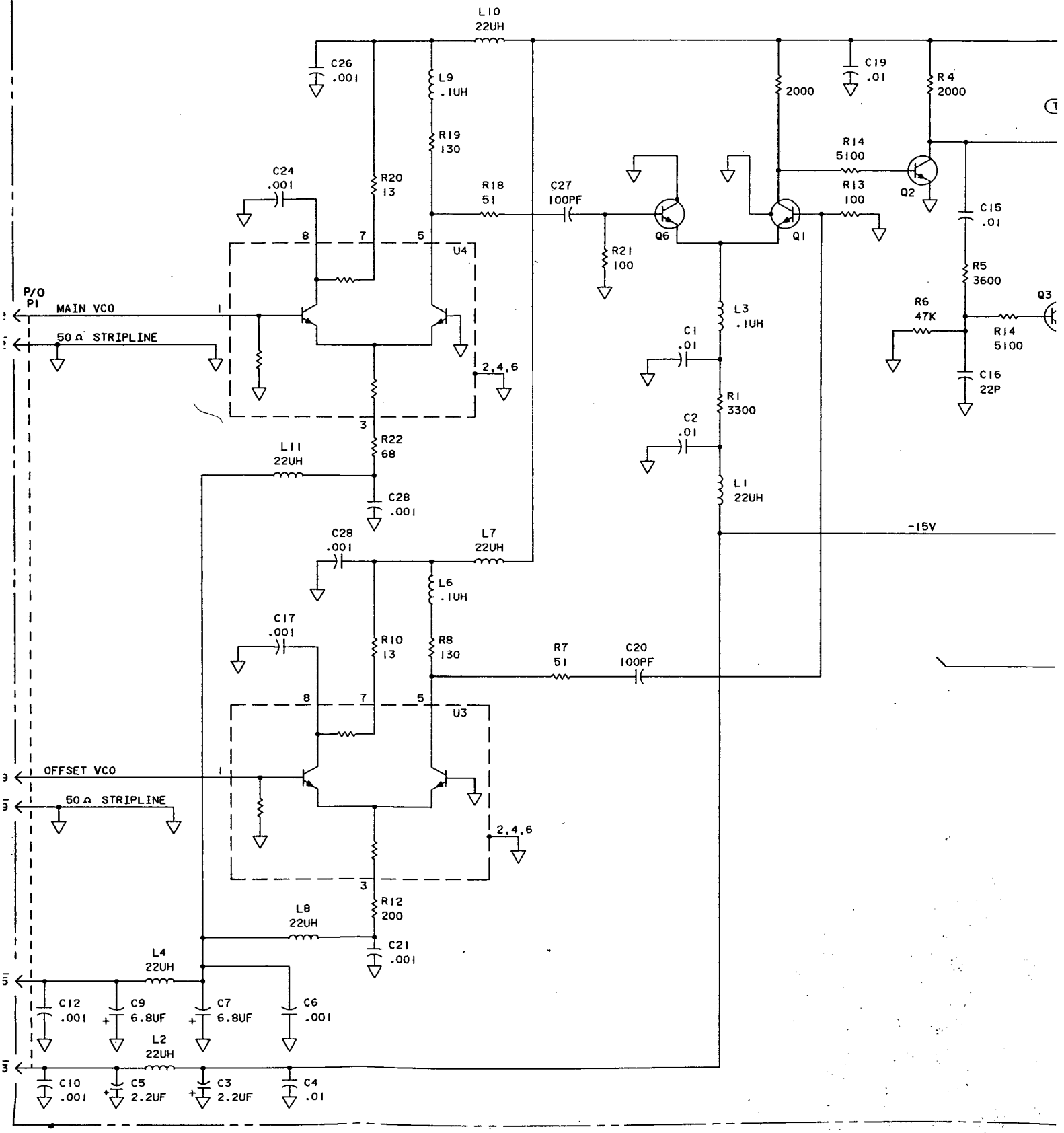

A7 MIXER/SEARCH CONTROL ASSEMBLY (05342-60007) SERIES 1720

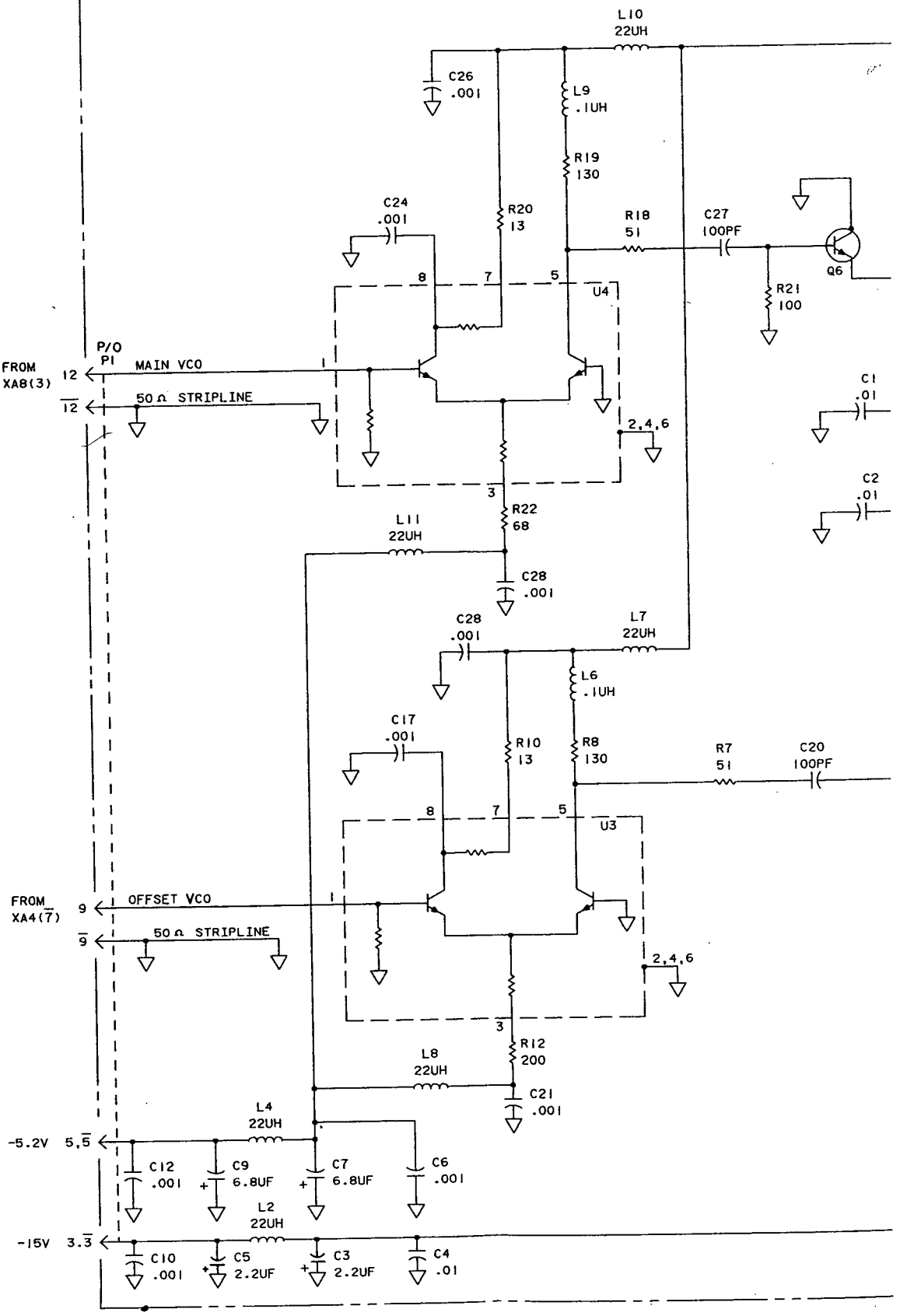

REFERENCE DESIGNATIONS

A7
C1-C28 CR1, CR2 L1-L11 Q1-Q6 R1-R22 TP1 U1-U14

TABLE OF ACTIVE ELEMENTS

REFERENCE DESIGNATION	HP PART NUMBER	MFR OR INDUSTRY PART NUMBER
CR1, CR2	1901-0518	Same
Q1, Q6	1854-0345	2N5179
Q2, Q3	1854-0092	Same
Q4, Q5	1854-0071	Same

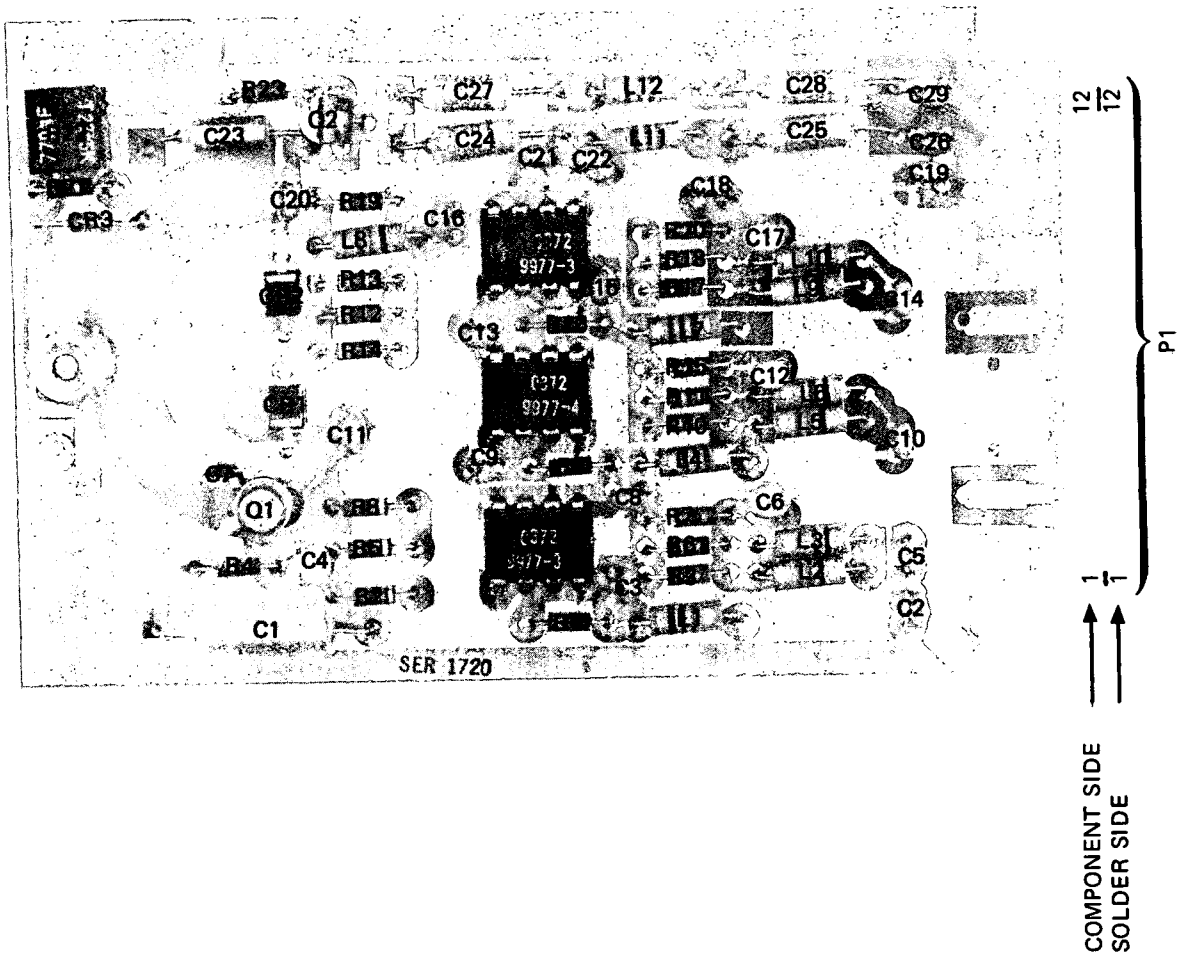

Part of Figure 8-31. A8 Main VCO Assembly

Figure 8-31
A8 MAIN VCO ASSEMBLY

(See Page 8-163)

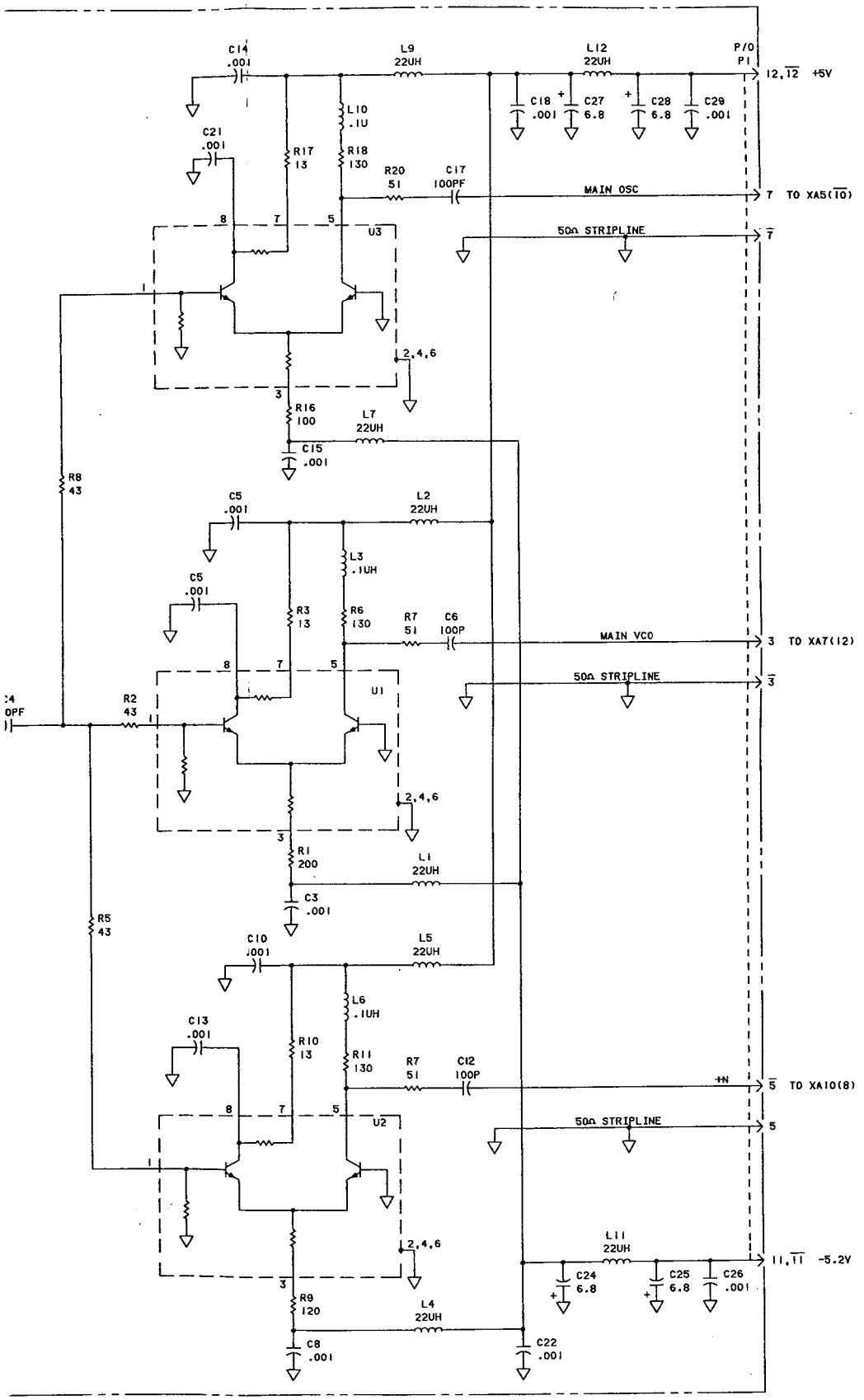

NOTE:
1. INDUCTANCE OF TUNED CIRCUIT IS FORMED BY A TRACE ON THE BOARD.

Figure 8-31. A8 Main VCO Assembly

A8 MAIN VCO ASSEMBLY (05342-60008) SERIES 1720

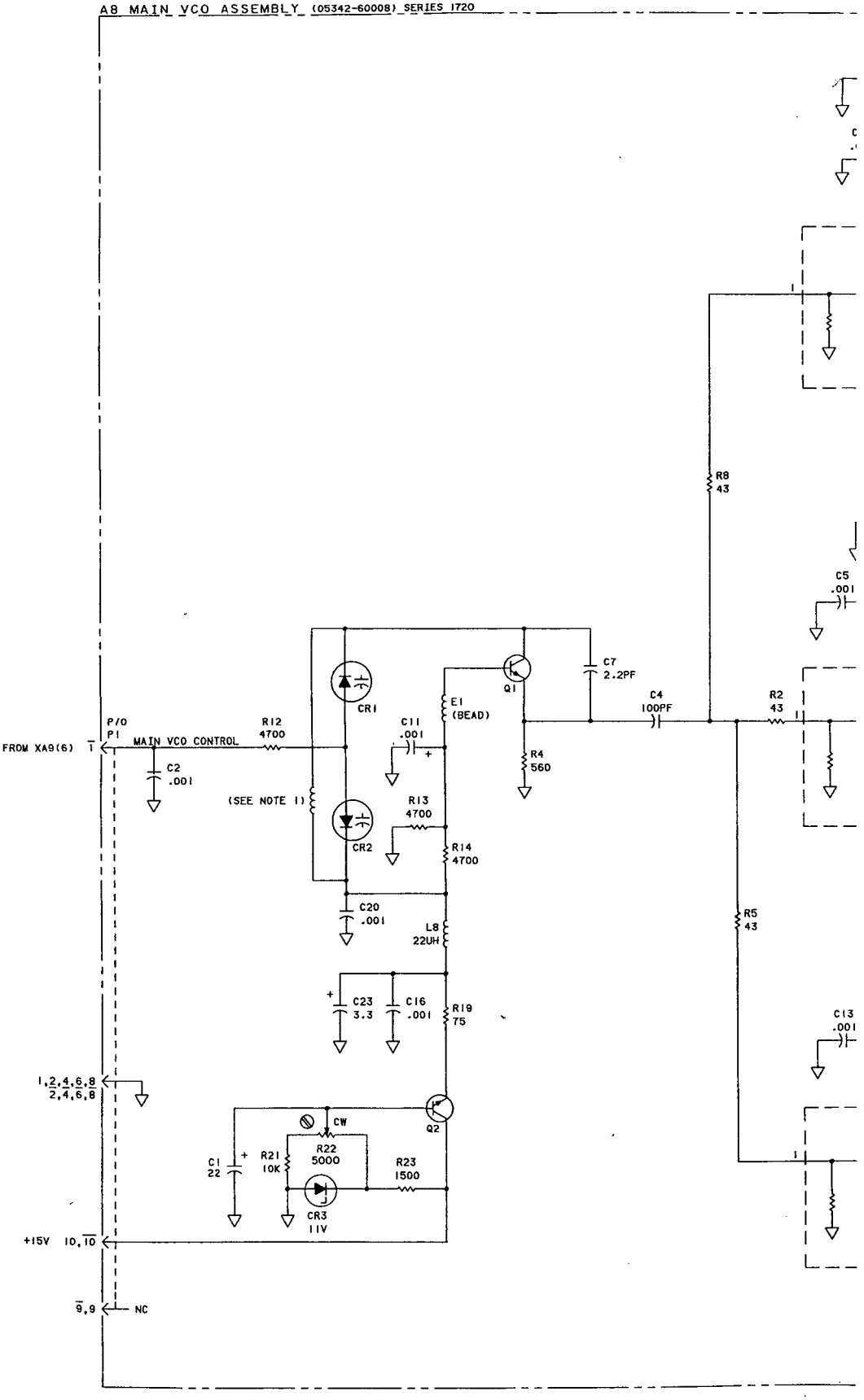

REFERENCE DESIGNATIONS

A8
C1-C29 CR1-CR3 E1 L1-L2 Q1, Q2 R1-R23 U1

TABLE OF ACTIVE ELEMENTS

REFERENCE DESIGNATION	HP PART NUMBER	MFR OR INDUSTRY PART NUMBER
CR1, CR2	0122-0065	Same
CR3	1902-3171	F27264
Q1	1854-0071	Same
Q2	1854-0071	Same
U1	1826-0372	Same

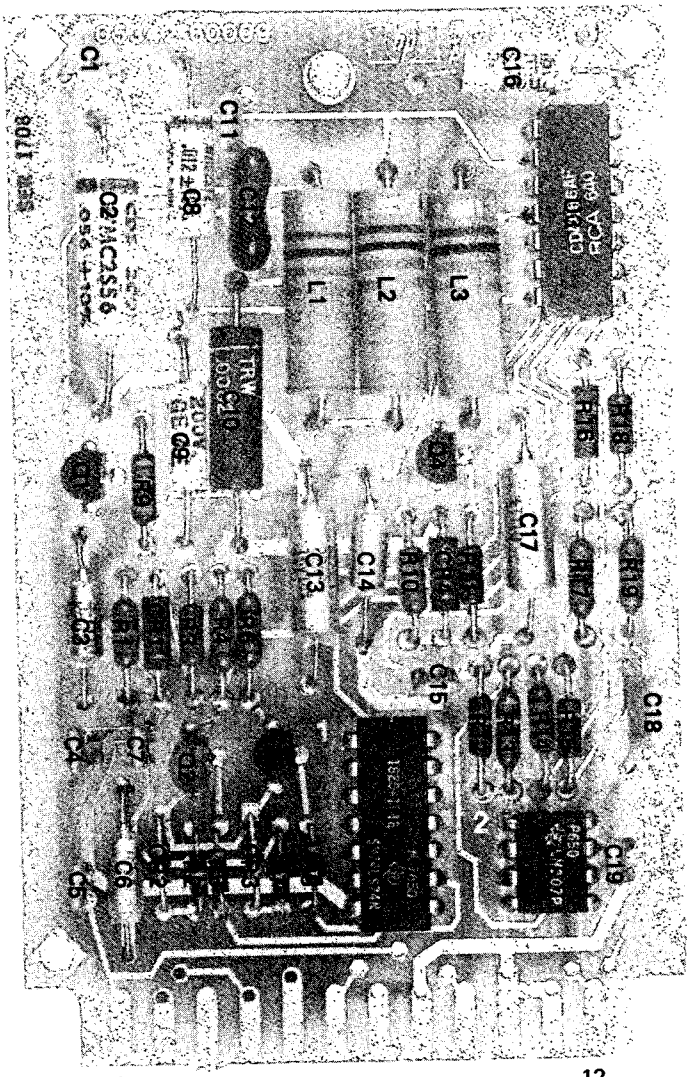

COMPONENT SIDE → 1/1 ... 12/12
SOLDER SIDE → 1/1 ... 12/12

P1

Part of Figure 8-32. A9 Main Loop Amplifier Assembly

Figure 8-32
A9 MAIN LOOP AMPLIFIER ASSEMBLY

(See Page 8-165)

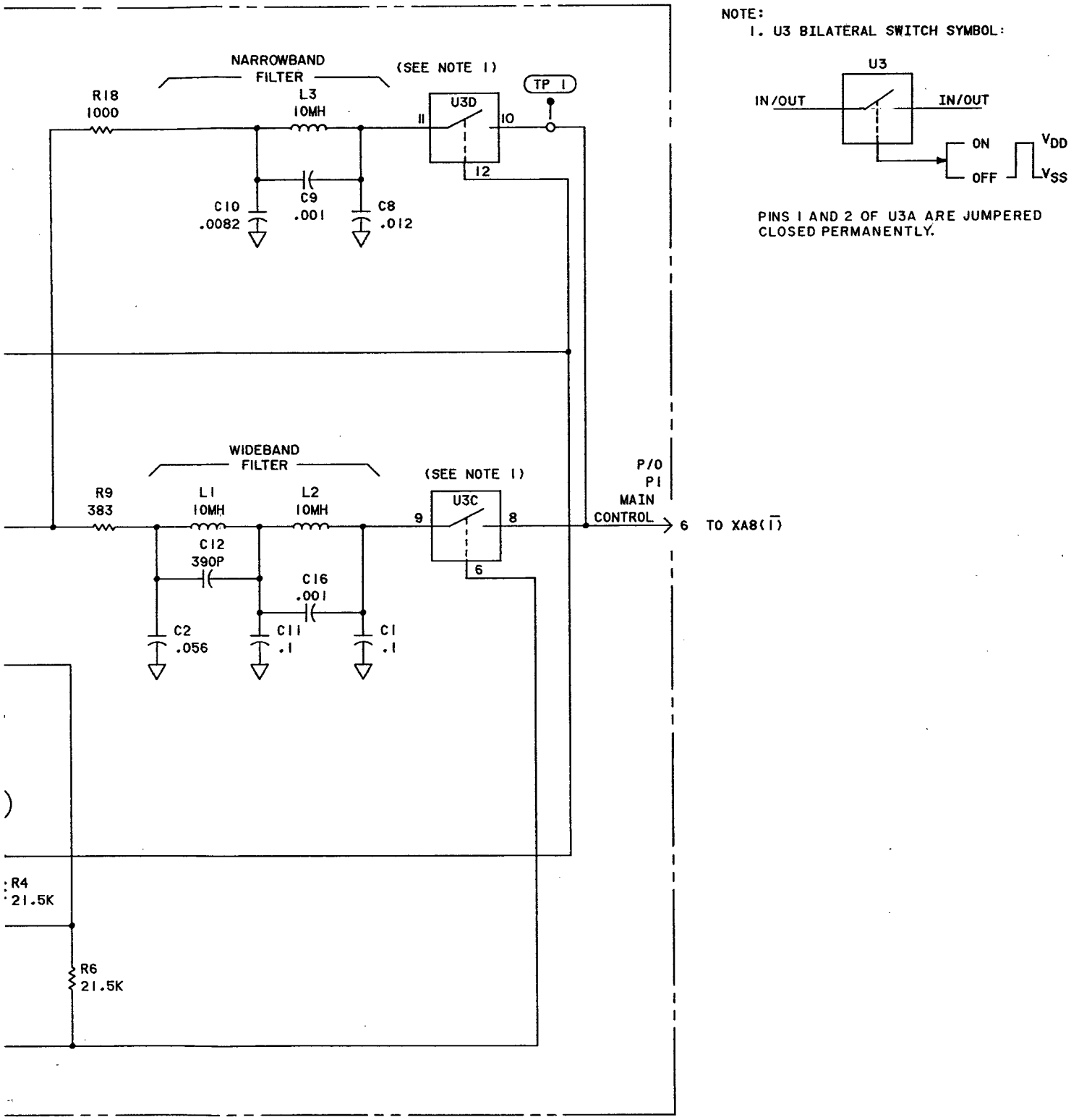

Figure 8-32. A9 Main Loop Amplifier Assembly

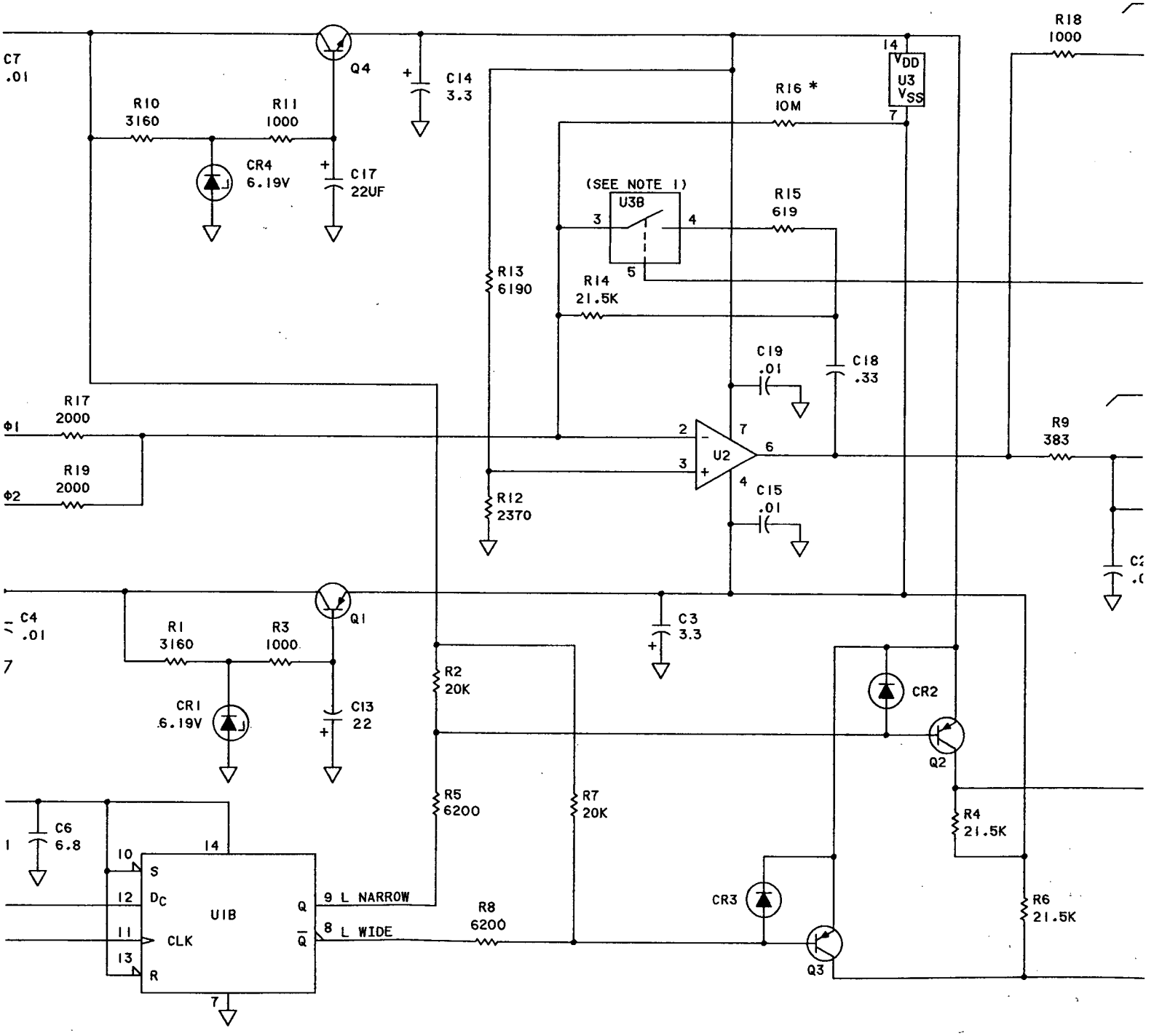
C7
.01
Q4
C14
3.3
R10
3160
R11
1000
CR4
6.19V
C17
22UF
R16 *
10M
14
VDD
U3
VSS
7
R18
1000
(SEE NOTE 1)
U3B
3
4
5
R15
619
R13
6190
R14
21.5K
C19
.01
C18
.33
R17
2000
Φ1
R19
2000
Φ2
2
3
7
6
4
U2
R9
383
R12
2370
C15
.01
C4
.01
Q1
R1
3160
R3
1000
C3
3.3
R2
20K
CR1
6.19V
C13
22
CR2
Q2
C6
6.8
R5
6200
R7
20K
R4
21.5K
10
14
S
12
DC
11
CLK
13
R
U1B
Q
9 L NARROW
Q
8 L WIDE
R8
6200
CR3
Q3
R6
21.5K
7

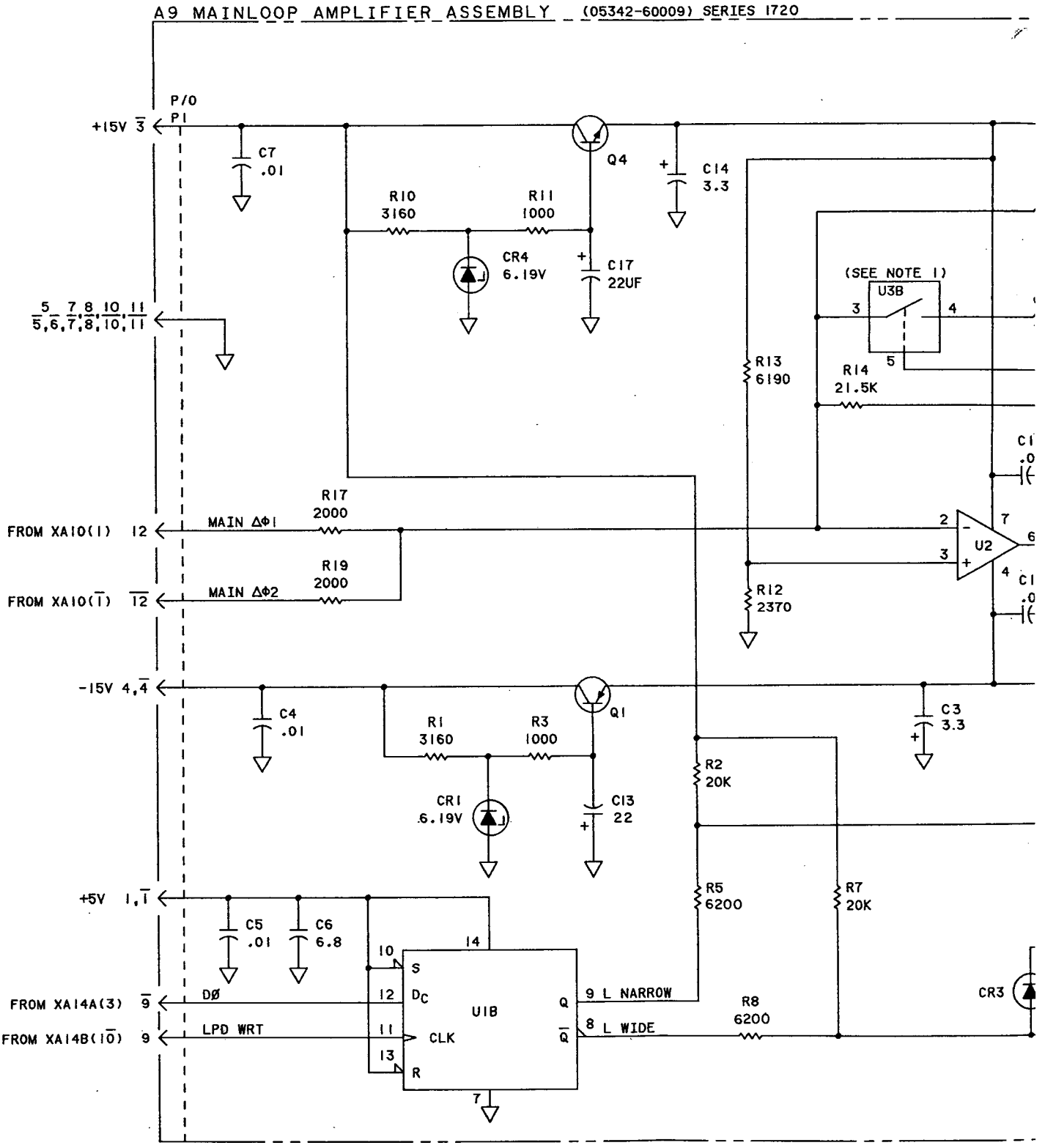
A9 MAINLOOP AMPLIFIER ASSEMBLY (05342-60009) SERIES 1720
P/O P1
+15V 3
C7 .01
Q4
C14 3.3
R10 3160
R11 1000
CR4 6.19V
C17 22UF
(SEE NOTE 1)
U3B
5,6,7,8,10,11
R13 6190
R14 21.5K
FROM XA10(1) 12
MAIN ΔΦ1
R17 2000
FROM XA10(1) 12
MAIN ΔΦ2
R19 2000
U2
R12 2370
-15V 4,4
C4 .01
Q1
R1 3160
R3 1000
C3 3.3
R2 20K
CR1 6.19V
C13 22
+5V 1,1
C5 .01
C6 6.8
R5 6200
R7 20K
FROM XA14A(3) 9
DØ
FROM XA14B(10) 9
LPD WRT
U1B
9 L NARROW
8 L WIDE
R8 6200
CR3

REFERENCE DESIGNATIONS

A9
C1-C19 CR1-CR4 L1-L3 Q1-Q4 R1-R19 TP1 U1-U3

TABLE OF ACTIVE ELEMENTS

REFERENCE DESIGNATION	HP PART NUMBER	MFR OR INDUSTRY PART NUMBER
CR1, CR4	1902-0049	FZ7240
CR2, CR3	1901-0040	Same
Q1-Q3	1853-0020	Same
Q4	1854-0071	Same
U1	1820-1112	SN74LS74N
U2	1820-0493	LM307N
U3	1820-1325	CD4066AF

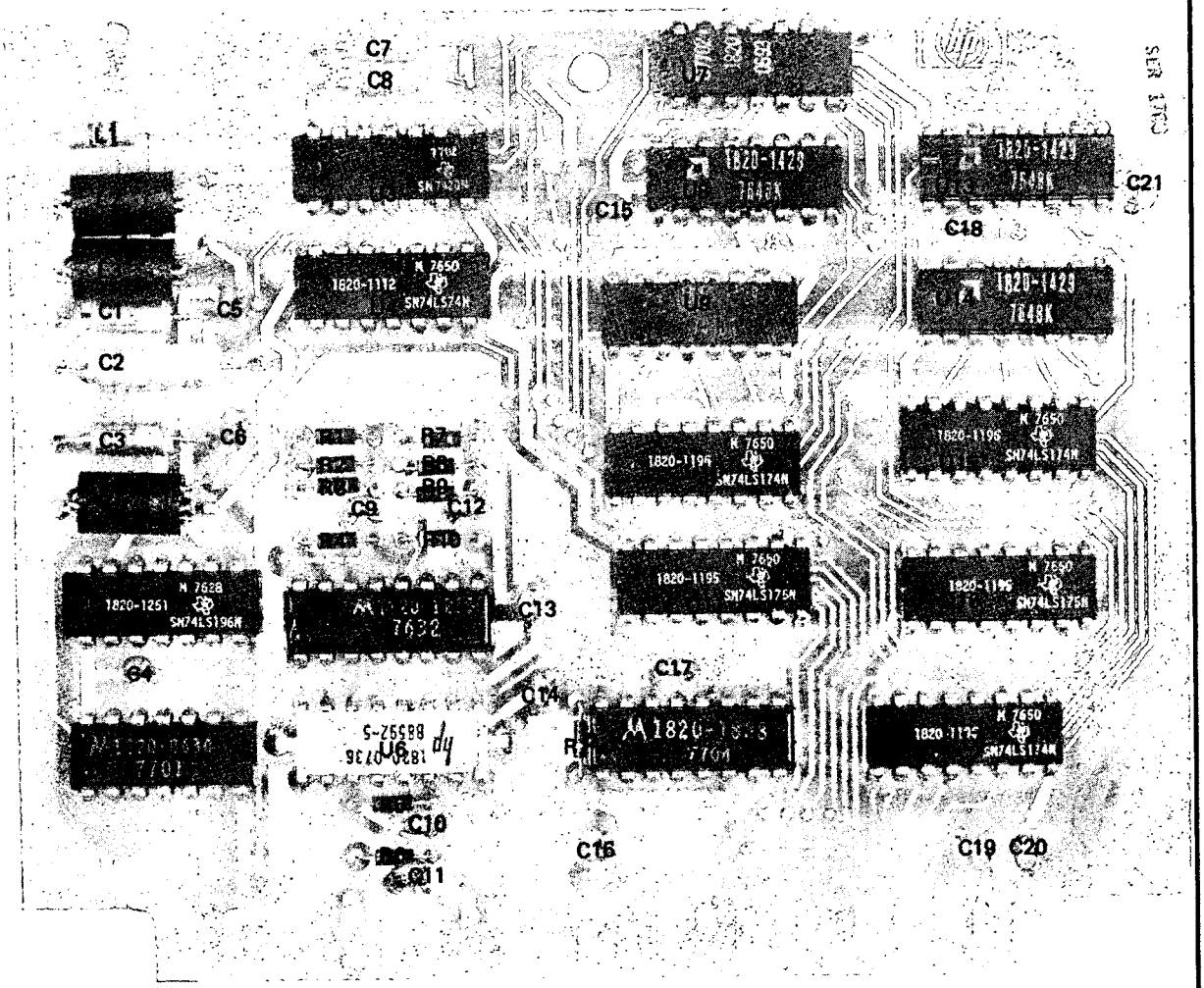

Part of Figure 8-33. A10 Divide-by-N Assembly

Figure 8-33
A10 DIVIDE-BY-N ASSEMBLY

(See Page 8-167)

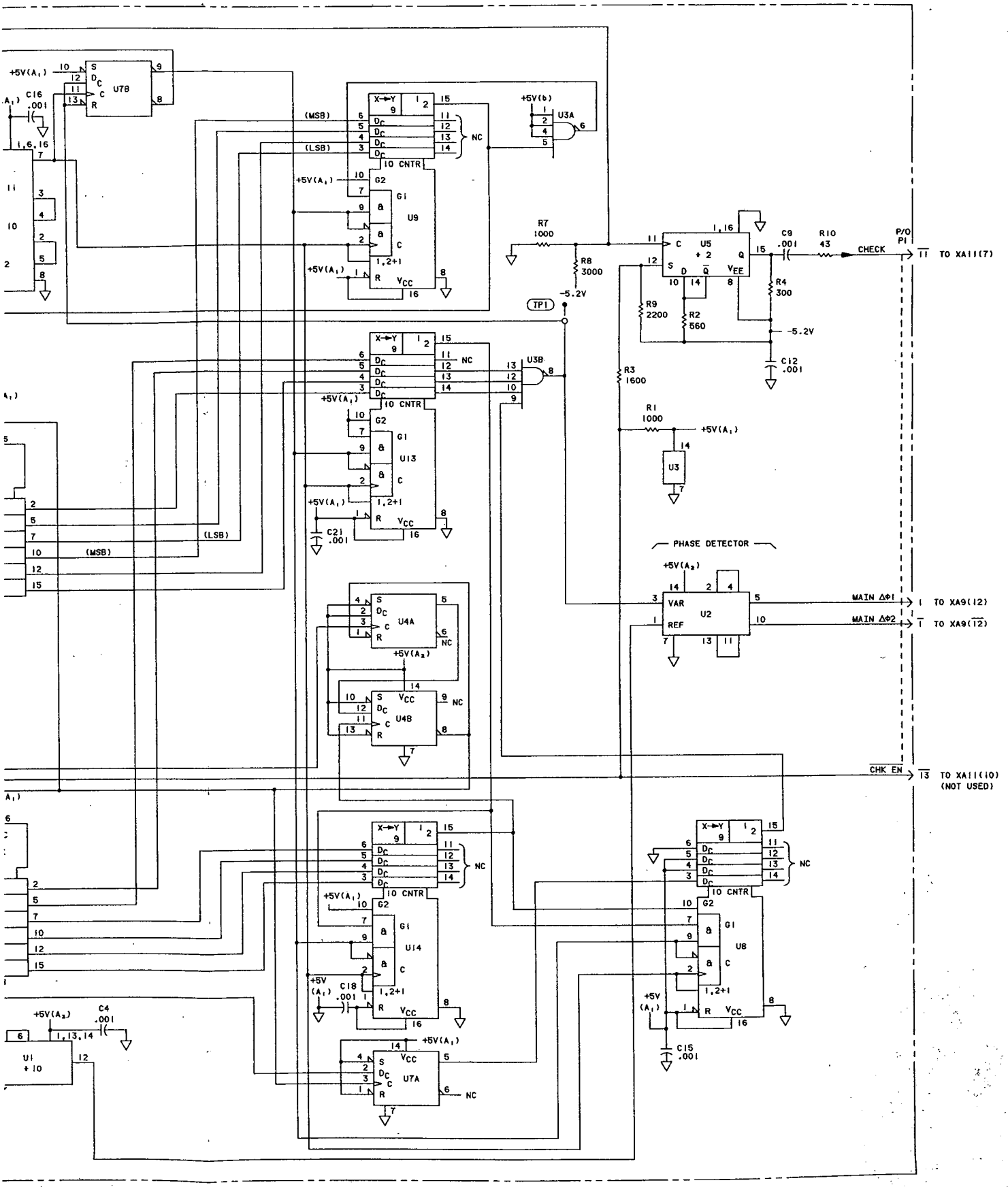

Figure 8-33. A10 Divide-by-N Assembly

A10 DIVIDE BY N/ PHASE DETECTOR ASSEMBLY (05342-60010) SERIES 1708

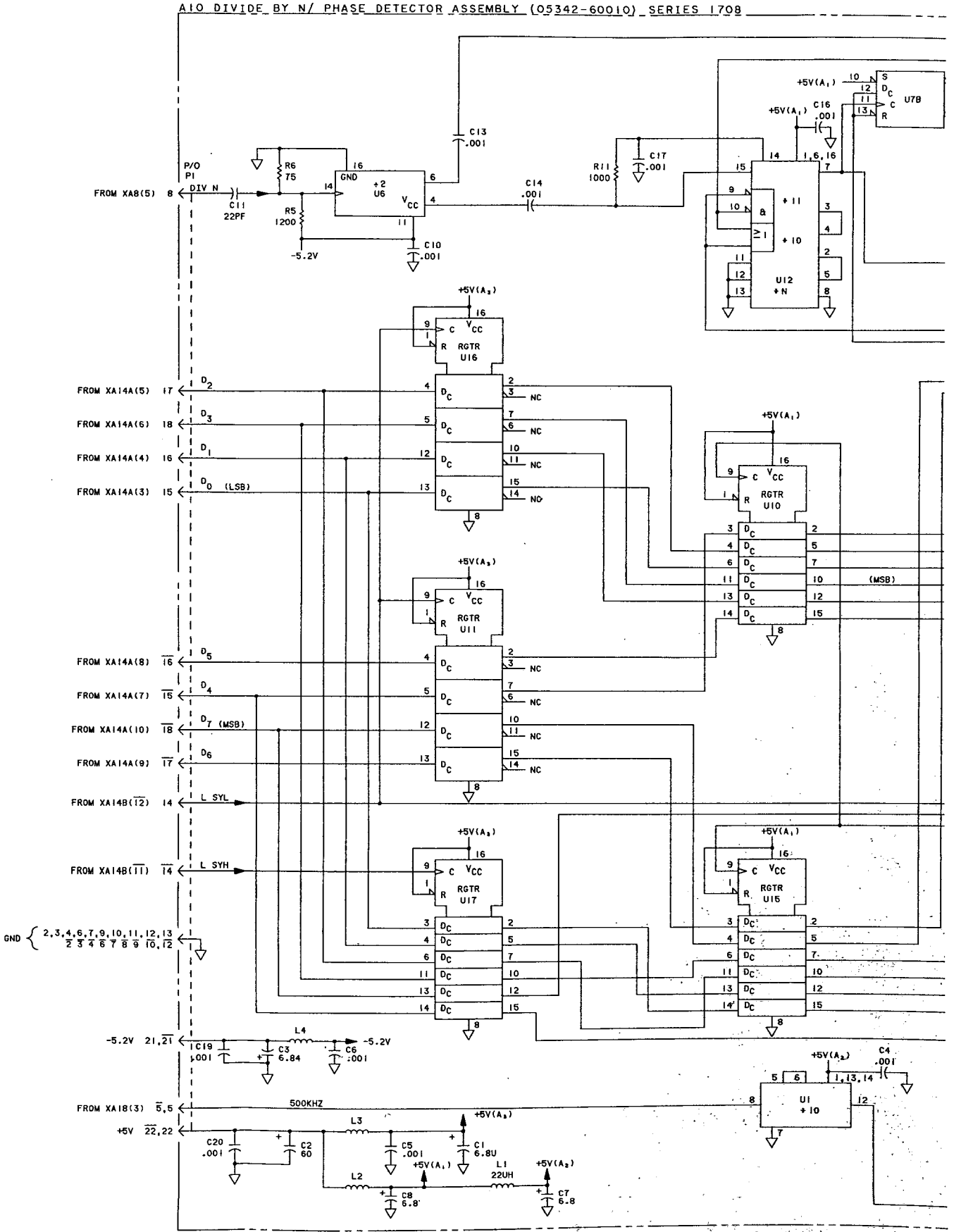

REFERENCE DESIGNATIONS

A10
C1-C21 L1-L4 R1-R11 TP1 U1-U17

TABLE OF ACTIVE ELEMENTS

REFERENCE DESIGNATION	HP PART NUMBER	MFR OR INDUSTRY PART NUMBER
U1	1820-1251	SN74LS196N
U2	1820-0630	MC4044P
U3	1820-0069	7420PC
U4	1820-1112	SN74LS74N
U5	1820-1225	MC10231P
U6	1820-0736	Same
U7	1820-0693	74S74PC
U8, U9, U13, U14	1820-1429	AM74LS160N
U10, U15, U17	1820-1196	AM74LS174N
U11, U16	1820-1195	AM74LS175N
U12	1820-1888	MC12013L

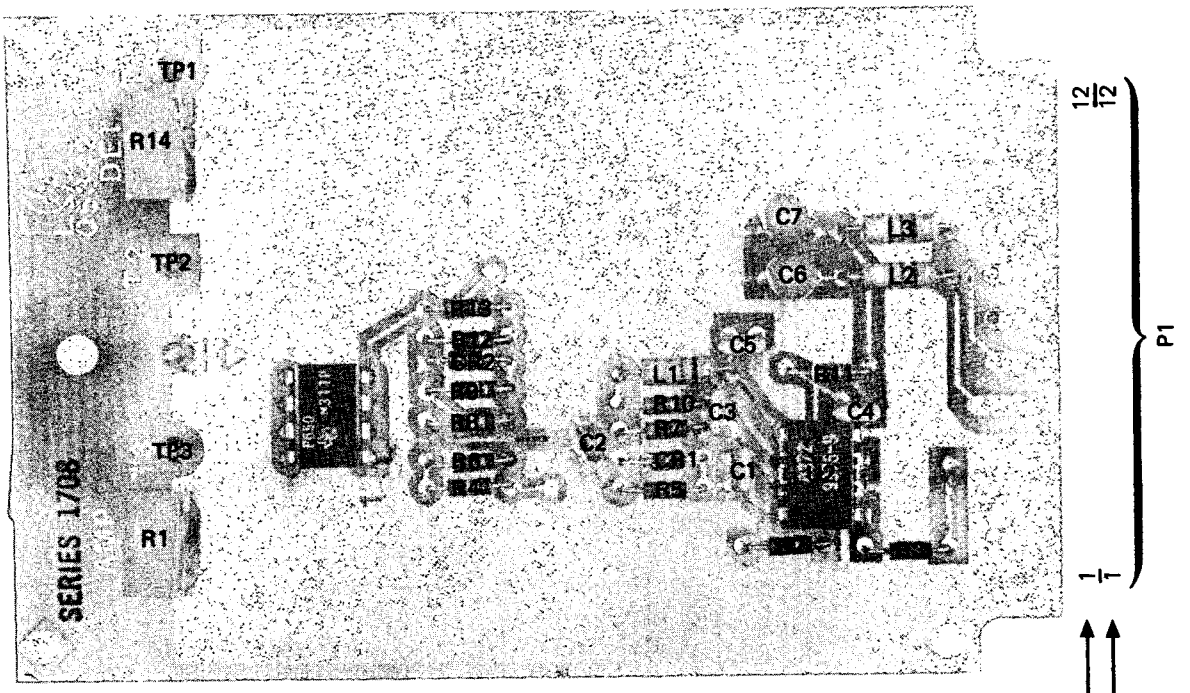

Part of Figure 8-34. A11 IF Limiter Assembly

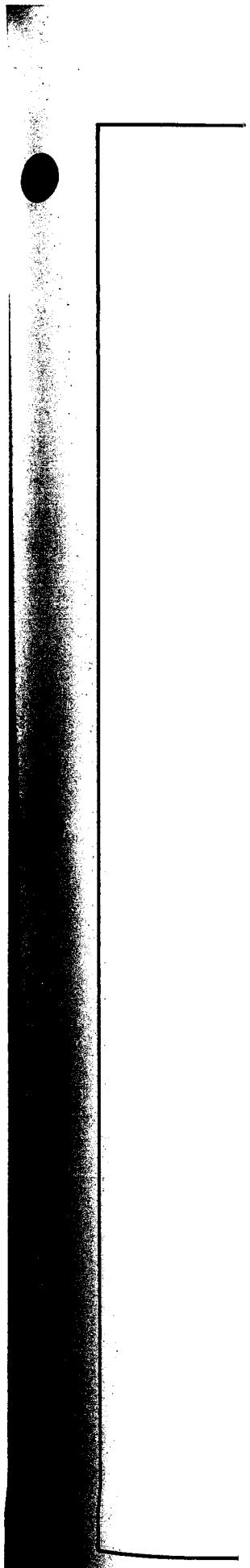

Figure 8-34
A11 IF LIMITER ASSEMBLY

(See Page 8-169)

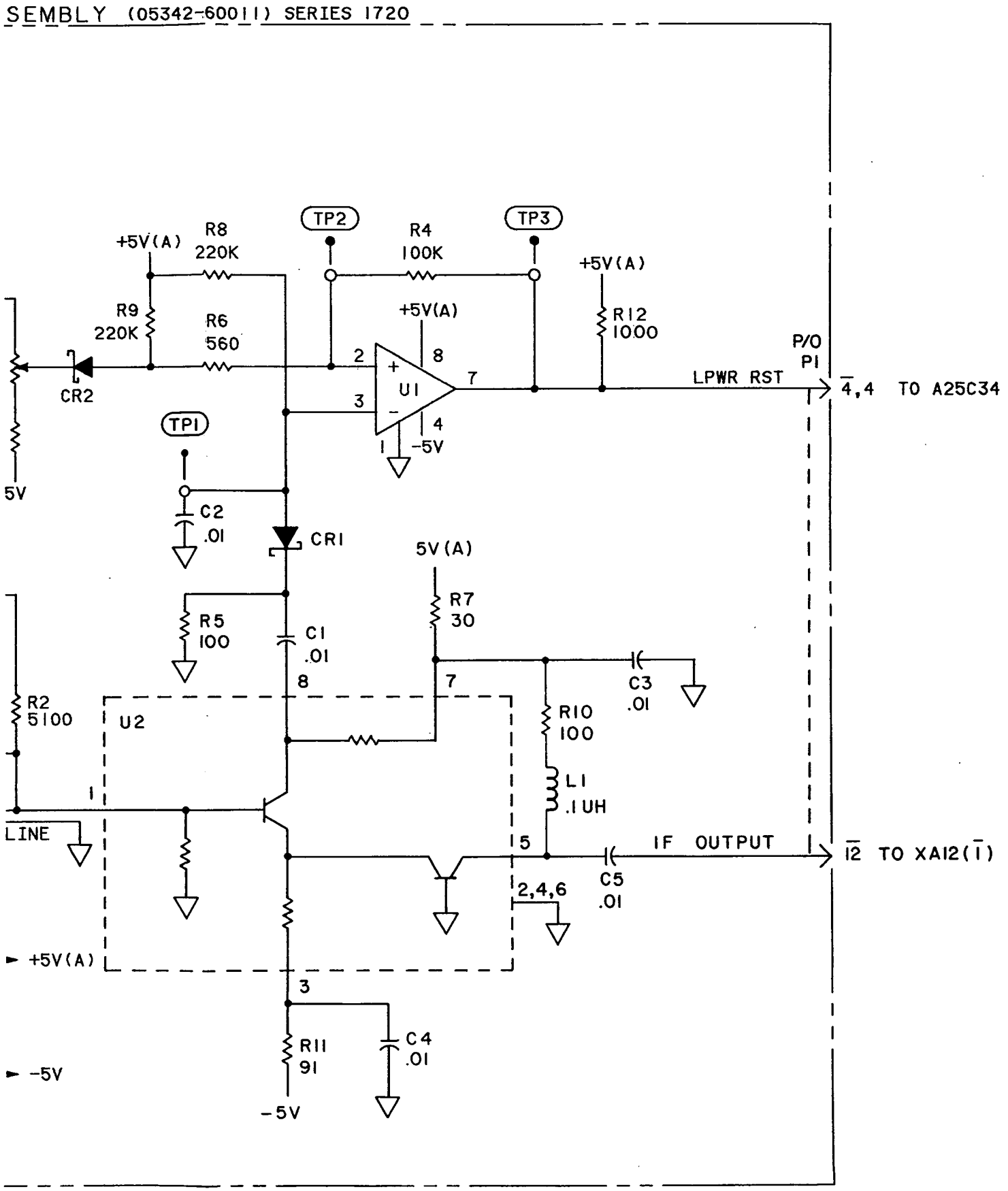

Figure 8-34. A11 IF Limiter Assembly

A11 I F LIMITER ASSEMBLY (05342

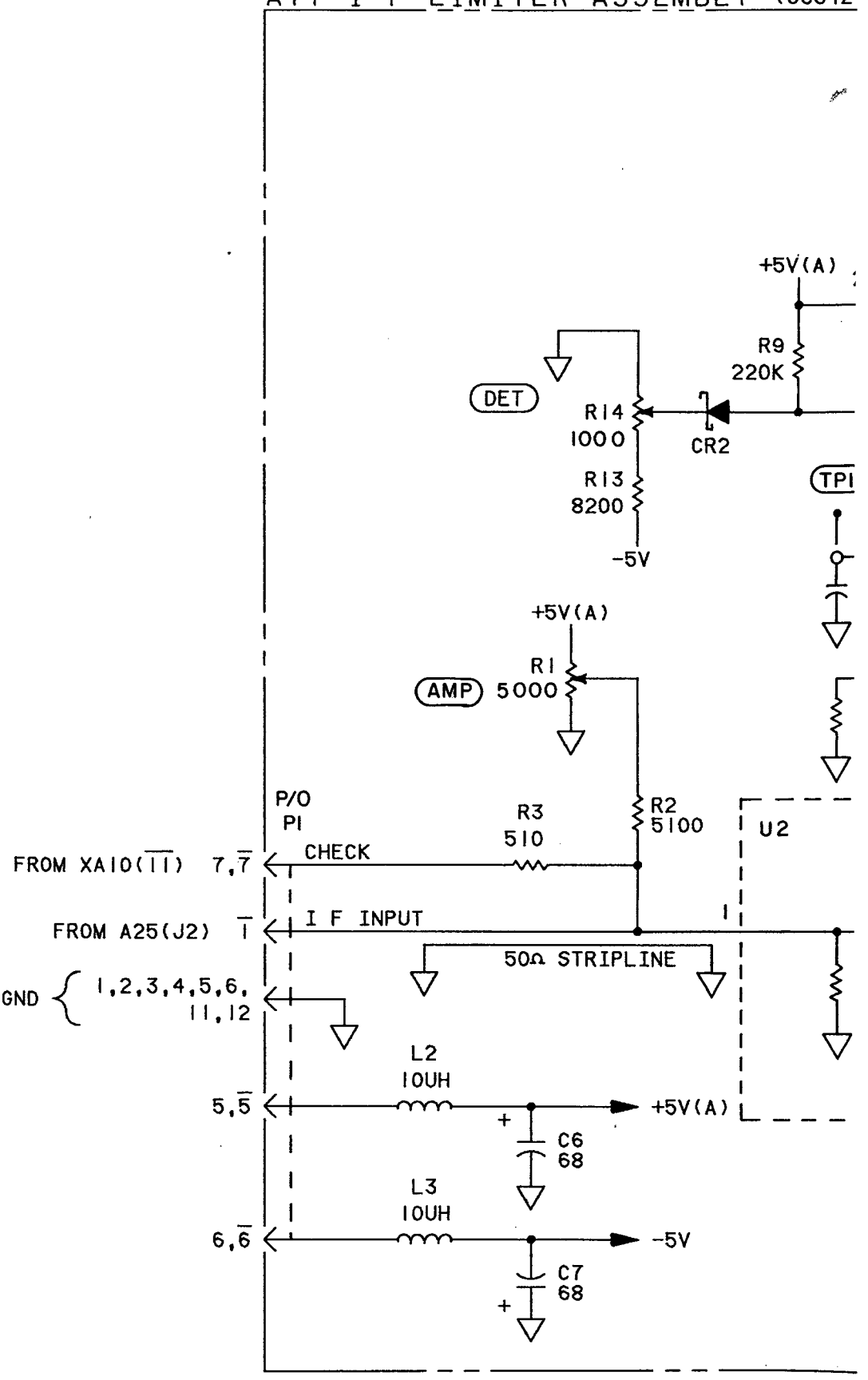

REFERENCE DESIGNATIONS

A11
C1-C7 CR1, CR2 L1-L3 R1-R14 TP1-TP4 U1, U2

TABLE OF ACTIVE ELEMENTS

REFERENCE DESIGNATION	HP PART NUMBER	MFR OR INDUSTRY PART NUMBER
CR1, CR2	1901-0535	Same
U1	1826-0065	5000-9043
U2	1826-0372	Same

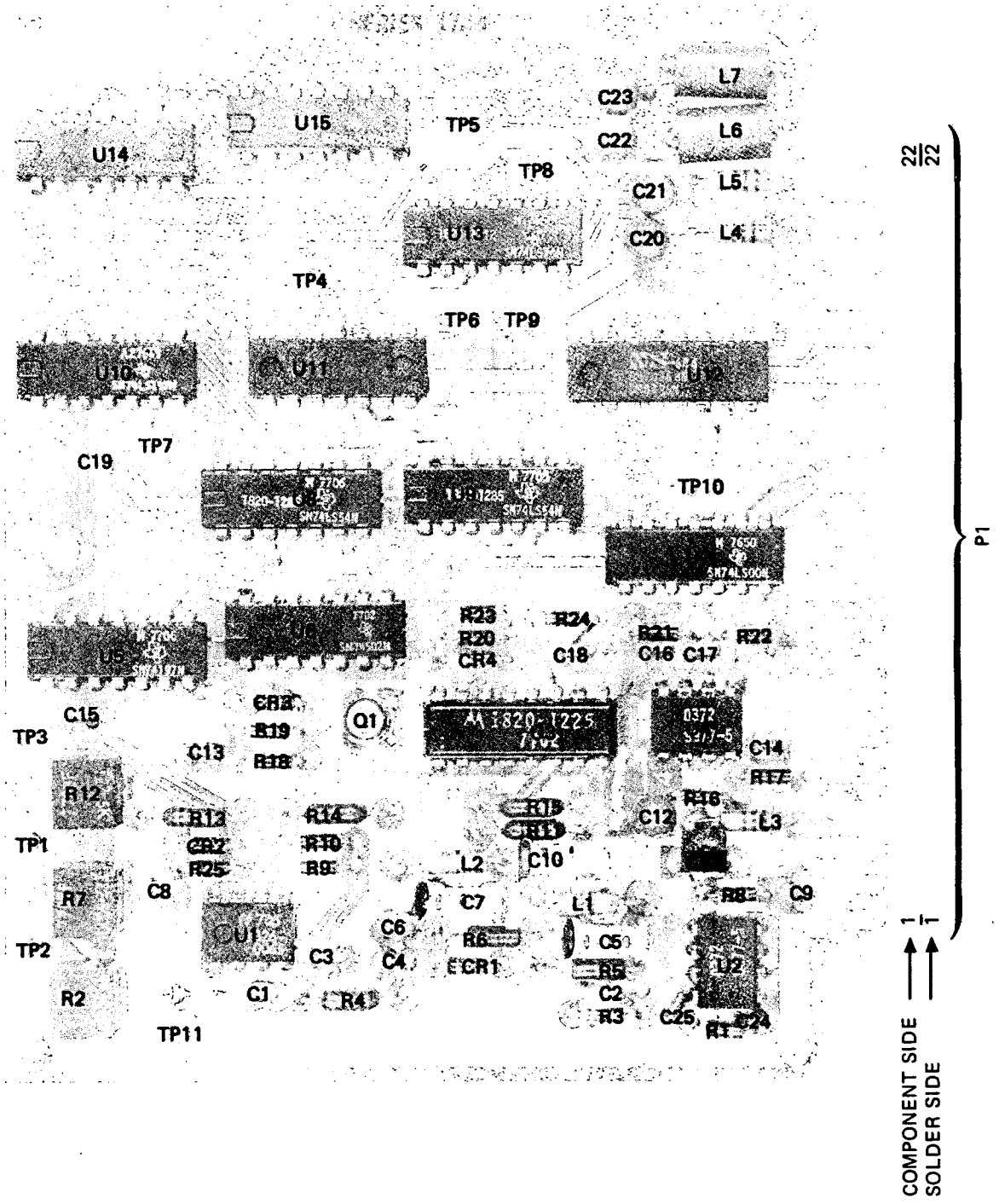

Part of Figure 8-35. A12 IF Detector Assembly

Figure 8-35
A12 IF DETECTOR ASSEMBLY

(See Page 8-171)

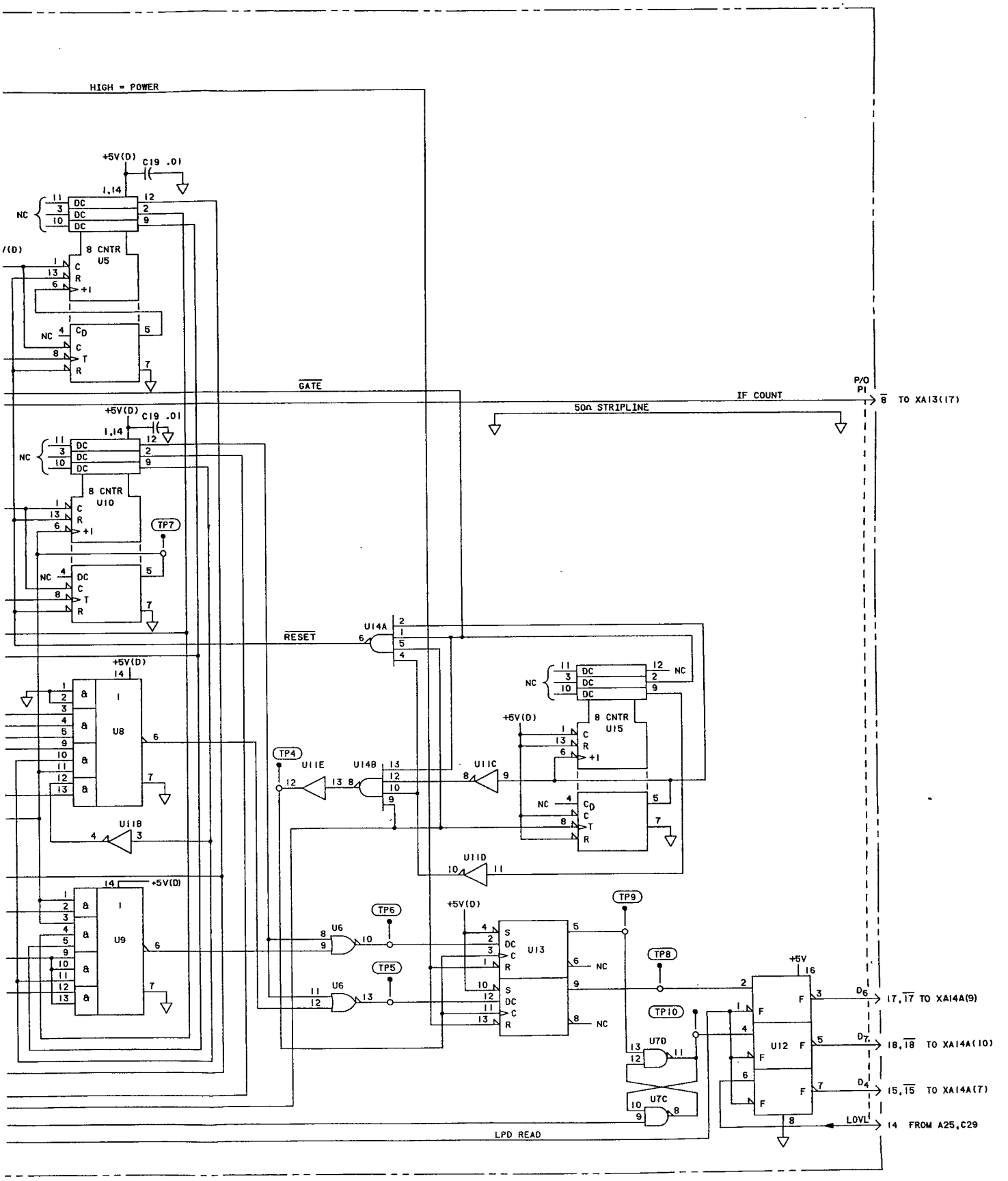

Figure 8-35. A12 IF Detector Assembly

DETECTOR ASSEMBLY (05342-60012) SERIES 1720

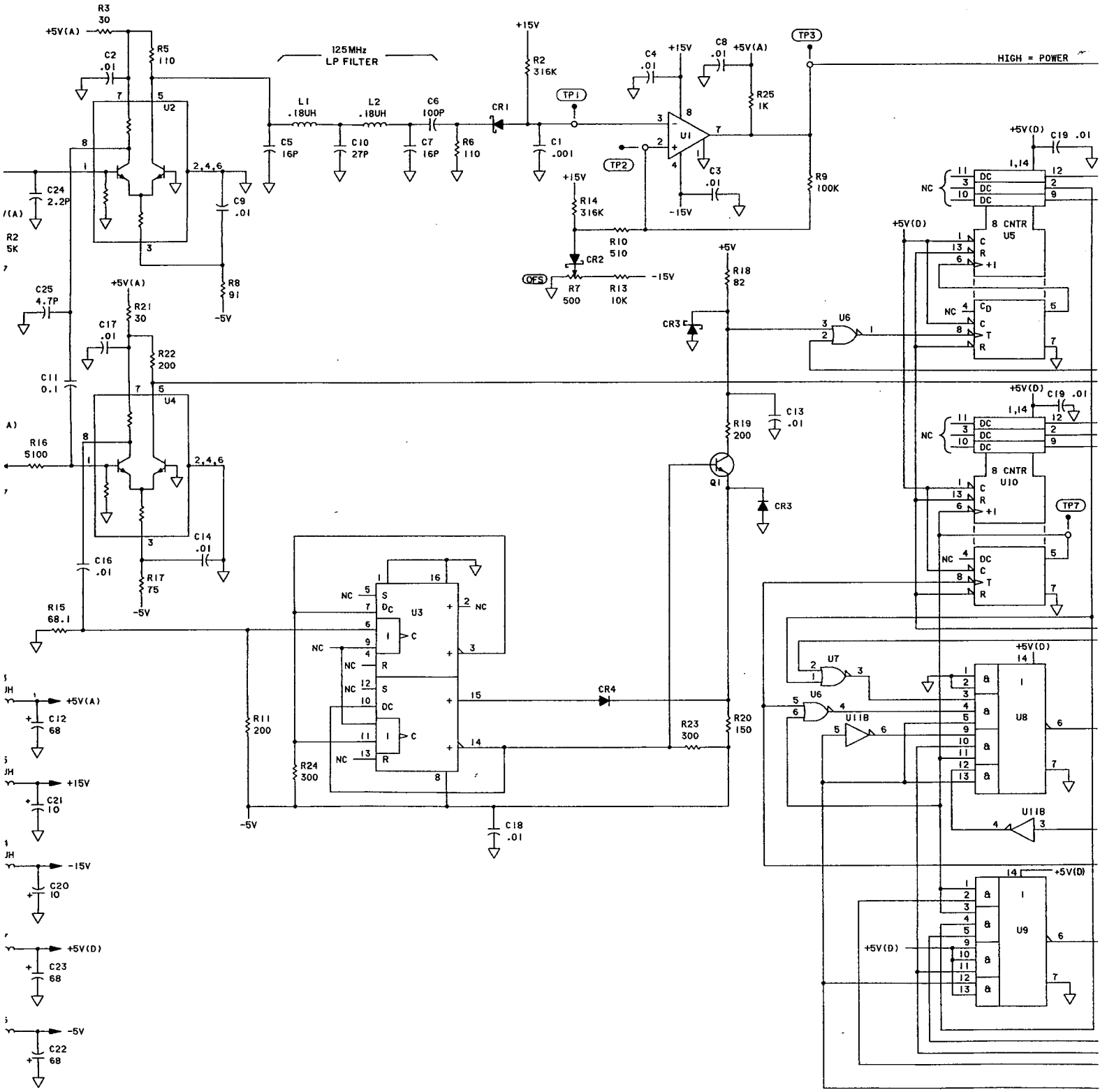

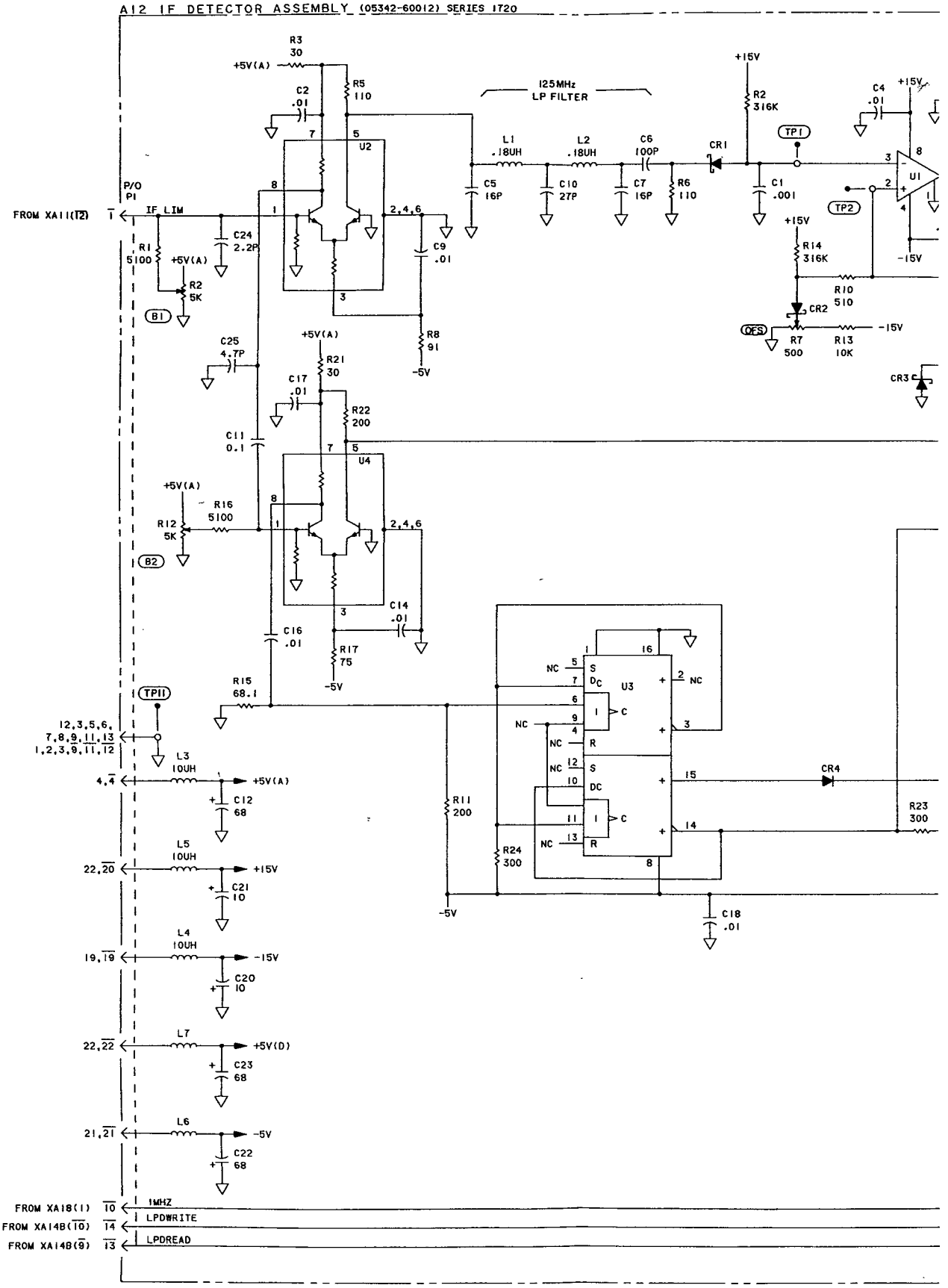
A12 IF DETECTOR ASSEMBLY (05342-60012) SERIES 1720
125MHz LP FILTER
P/O P1
FROM XA11(T2)
IF LIM
+5V(A)
+15V
-15V
-5V
+5V(D)
R1 5100
R2 5K
R3 30
R5 110
C2 .01
C24 2.2P
C9 .01
R8 91
C25 4.7P
R21 30
C17 .01
R22 200
C11 0.1
R16 5100
R12 5K
C14 .01
C16 .01
R17 75
R15 68.1
L1 .18UH
L2 .18UH
C6 100P
C5 16P
C10 27P
C7 16P
R6 110
CR1
R2 316K
C1 .001
C4 .01
R14 316K
R10 510
CR2
R7 500
R13 10K
CR3
R11 200
R24 300
R23 300
CR4
C18 .01
L3 10UH
C12 68
L5 10UH
C21 10
L4 10UH
C20 10
L7
C23 68
L6
C22 68
TP1
TP2
TP11
B1
B2
OFS
U1
U2
U3
U4
12,3,5,6, 7,8,9,11,13 1,2,3,9,11,12
4,4
22,20
19,19
22,22
21,21
FROM XA18(1) 10 1MHZ
FROM XA14B(10) 14 LPDWRITE
FROM XA14B(9) 13 LPDREAD

REFERENCE DESIGNATIONS

A12
C1-C25 CR1-CR4 L1-L7 Q1 R1-R25 TP1-TP11 U1-U15

TABLE OF ACTIVE ELEMENTS

REFERENCE DESIGNATION	HP PART NUMBER	MFR OR INDUSTRY PART NUMBER
CR1-CR3	1901-0535	Same
CR4	1901-0040	Same
Q1	1854-0345	2N5179
U1	1826-0065	LM311N
U2, U4	1826-0372	Same
U3	1820-1225	MC10231P
U5	1820-0765	SN74197N
U6	1820-1322	SN74S02N
U7	1820-1197	SN74LS00N
U8, U9	1820-1285	SN74LS54N
U10, U15	1820-1193	SN74LS197N
U11	1820-0174	7404PC
U12	1820-1255	DM8098N
U13	1820-1112	SN74LS74N
U14	1820-1204	SN74LS20N

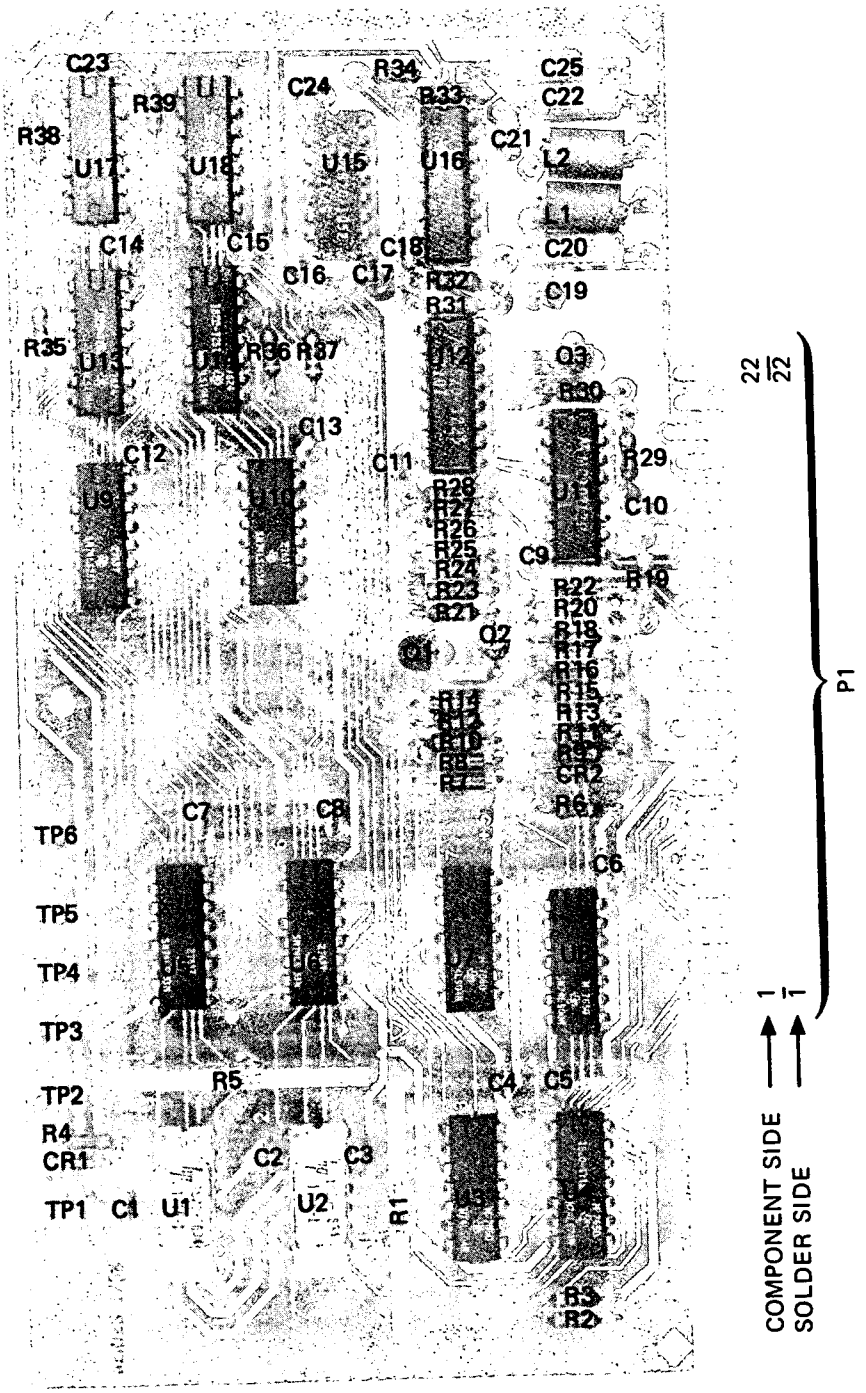

Part of Figure 8-36. A13 Counter Assembly

Figure 8-36
A13 COUNTER ASSEMBLY

(See Page 8-173)

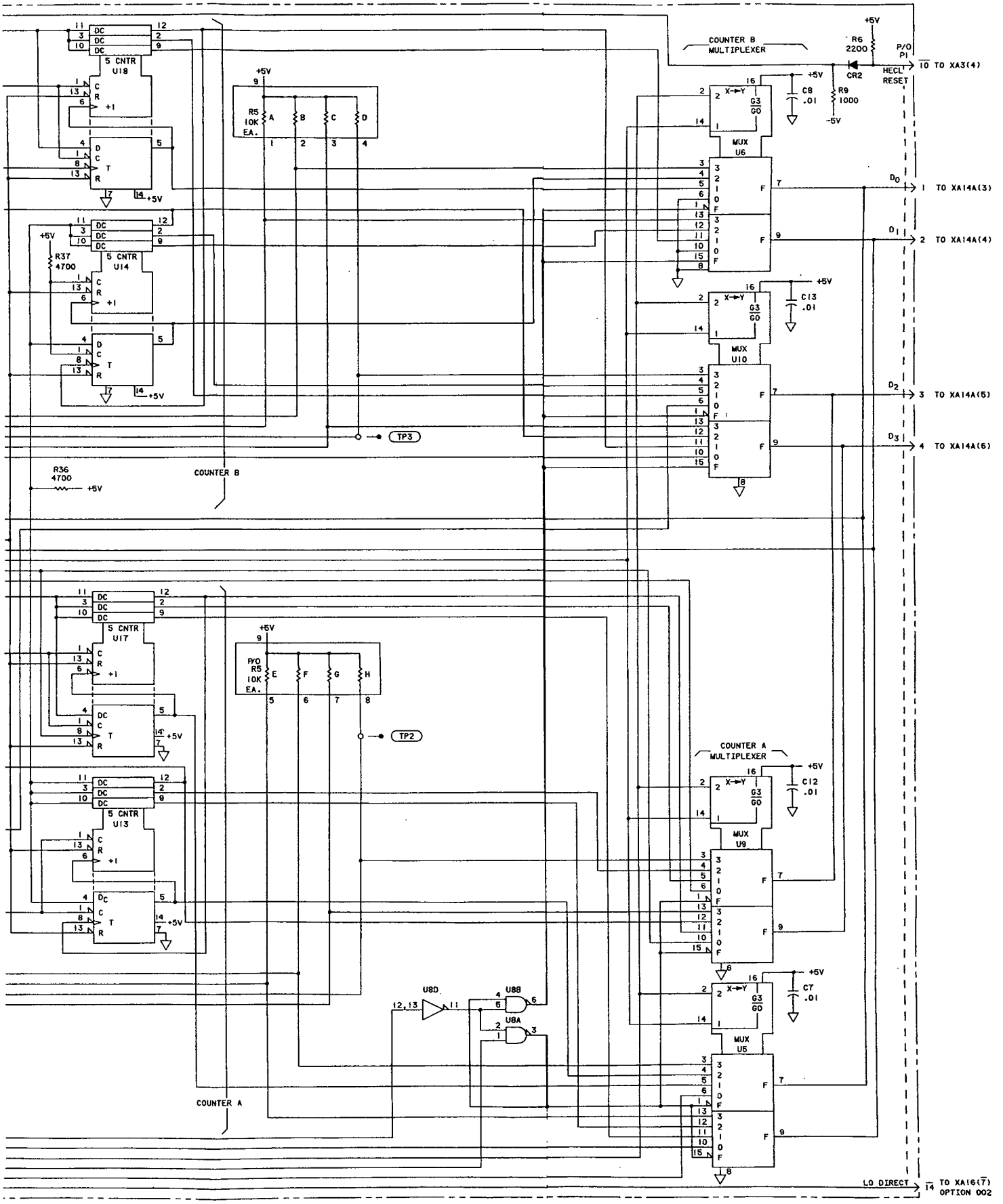

Figure 8-36. A13 Counter Assembly

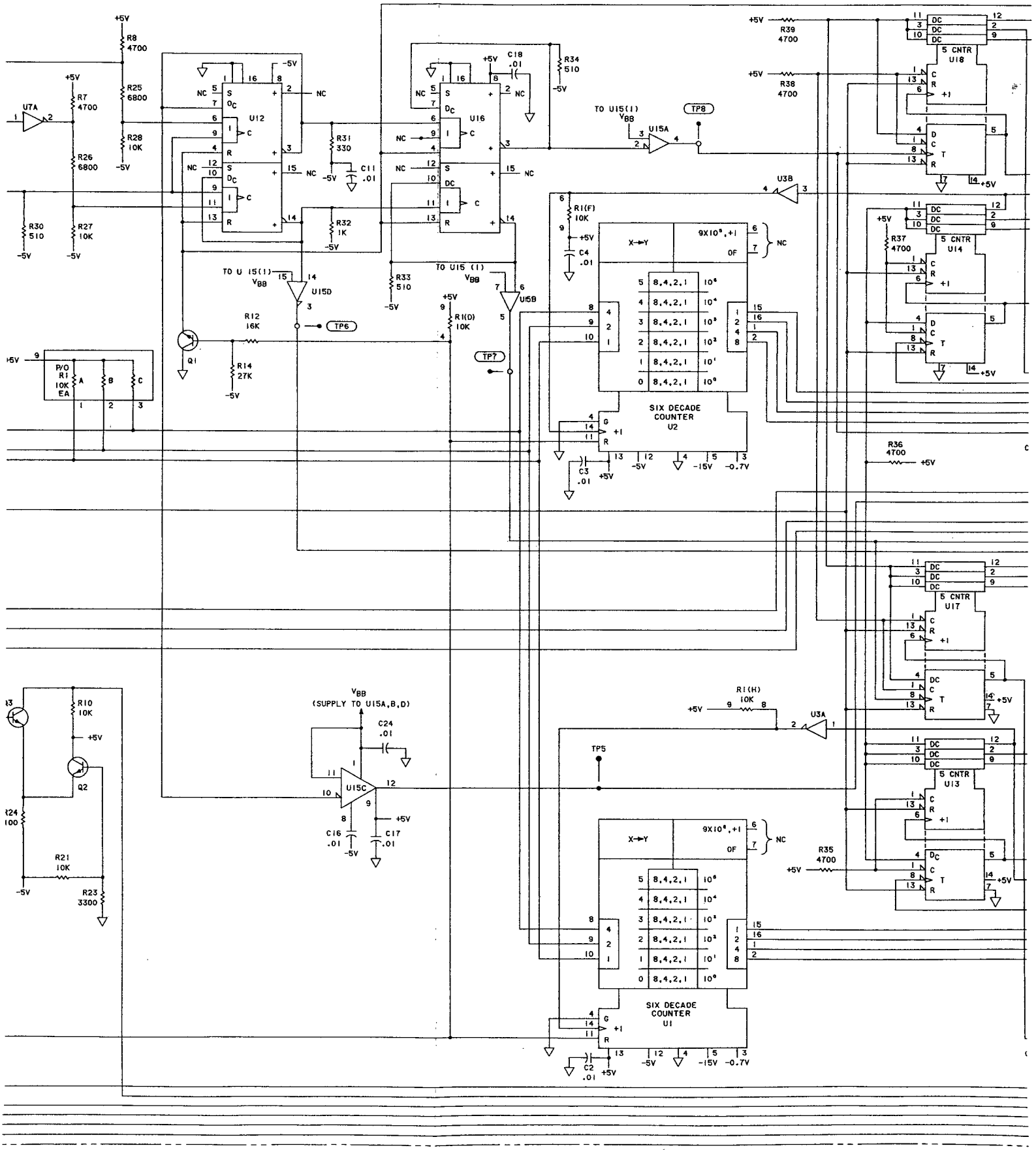

U7A
R7 4700
R8 4700
R25 6800
R28 10K
R26 6800
R30 510
R27 10K
U12
U16
R31 330
C11 .01
R32 1K
R33 510
C18 .01
R34 510
TO U15(1) VBB
U15A
TP8
U3B
R1(F) 10K
C4 .01
X→Y
9X10⁶,+1
OF
NC
SIX DECADE COUNTER U2
C3 .01
TO U 15(1) VBB
U15D
R12 16K
TP6
Q1
R14 27K
TO U15 (1) VBB
U15B
R1(D) 10K
TP7
P/O R1 10K EA
R39 4700
R38 4700
5 CNTR U18
R37 4700
5 CNTR U14
R36 4700
5 CNTR U17
5 CNTR U13
R1(H) 10K
U3A
TP5
R35 4700
SIX DECADE COUNTER U1
C2 .01
VBB (SUPPLY TO U15A,B,D)
C24 .01
U15C
C16 .01
C17 .01
R10 10K
Q2
R21 10K
R23 3300

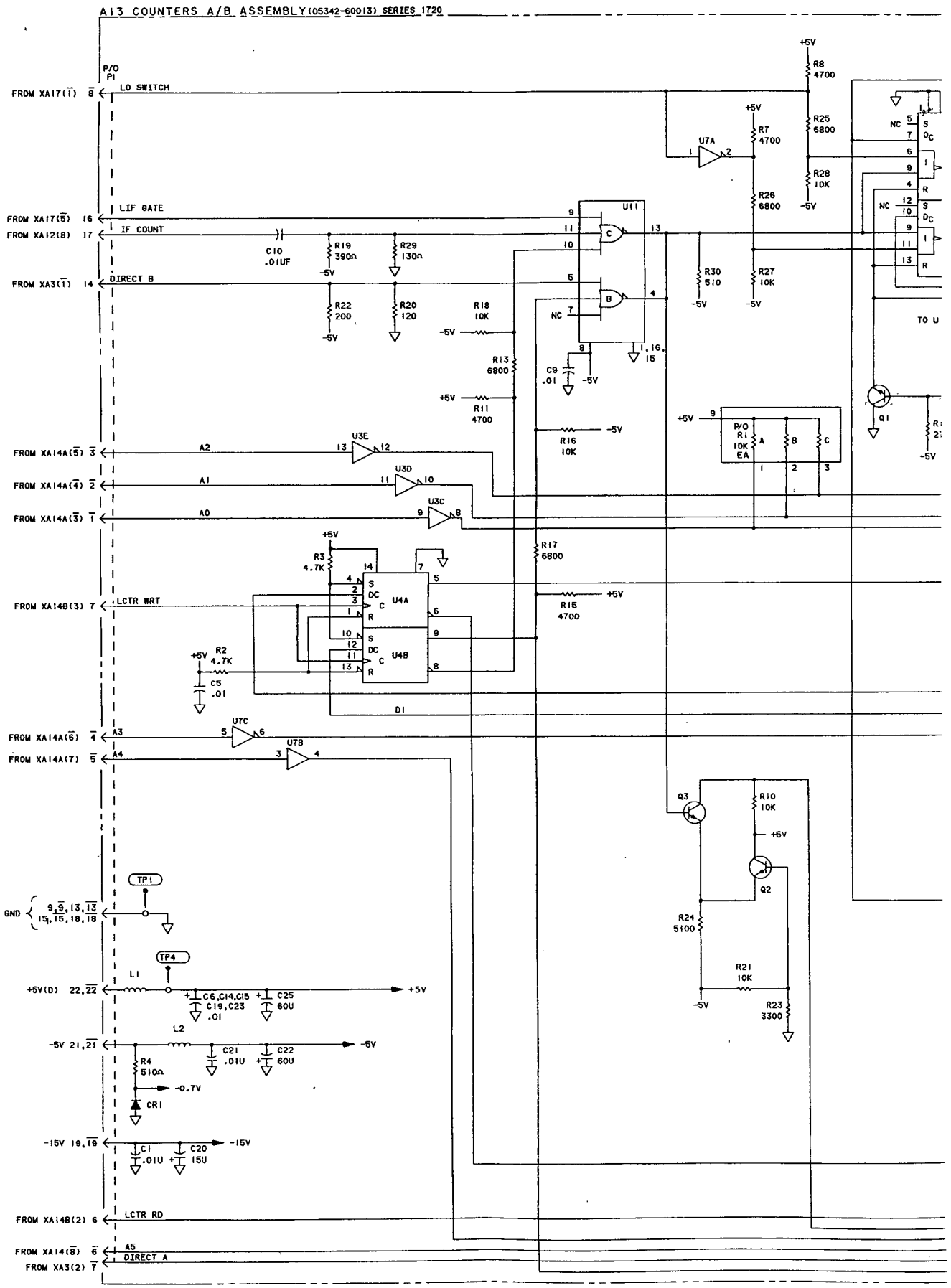
A13 COUNTERS A/B ASSEMBLY (05342-60013) SERIES 1720
P/O P1
FROM XA17(1) 8
LO SWITCH
FROM XA17(5) 16
LIF GATE
FROM XA12(8) 17
IF COUNT
FROM XA3(1) 14
DIRECT B
C10 .01UF
R19 390Ω
R29 130Ω
R22 200
R20 120
-5V
+5V
R8 4700
R25 6800
R28 10K
R7 4700
R26 6800
R30 510
R27 10K
U7A
U11
R18 10K
R13 6800
C9 .01
R11 4700
R16 10K
NC
TO U
Q1
P/O R1 10K EA
FROM XA14A(5) 3
FROM XA14A(4) 2
FROM XA14A(3) 1
A2
A1
A0
U3E
U3D
U3C
R3 4.7K
R17 6800
R15 4700
R2 4.7K
C5 .01
U4A
U4B
FROM XA14B(3) 7
LCTR WRT
D1
FROM XA14A(6) 4
FROM XA14A(7) 5
A3
A4
U7C
U7B
Q3
R10 10K
Q2
R24 5100
R21 10K
R23 3300
TP1
TP4
GND
9,9,13,13
15,15,18,18
L1
L2
+5V(D) 22,22
C6,C14,C15 C19,C23 .01
C25 60U
-5V 21,21
R4 510Ω
-0.7V
CR1
C21 .01U
C22 60U
-15V 19,19
C1 .01U
C20 15U
FROM XA14B(2) 6
LCTR RD
FROM XA14(8) 6
FROM XA3(2) 7
A5
DIRECT A

REFERENCE DESIGNATIONS

A13
C1-C25 CR1, CR2 L1, L2 Q1, Q2 R1-R34 TP1-TP8 U1-U18

TABLE OF ACTIVE ELEMENTS

REFERENCE DESIGNATION	HP PART NUMBER	MFR OR INDUSTRY PART NUMBER
CR1, CR2	1901-0040	Same
Q1, Q2	1854-0071	Same
U1, U2	1820-0634	Same
U3, U7	1820-1199	SN74LS04N
U4	1820-1112	SN74LS74N
U5, U6, U9, U10		SN74LS253N
U8	1820-1197	SN74LS00N
U11	1820-1950	MC10212P
U12, U16	1820-1225	MC10231P
U13, U14	1820-1251	SN74LS196N
U17, U18	1820-1251	SN74LS196N
U15	1820-1052	MC10125L

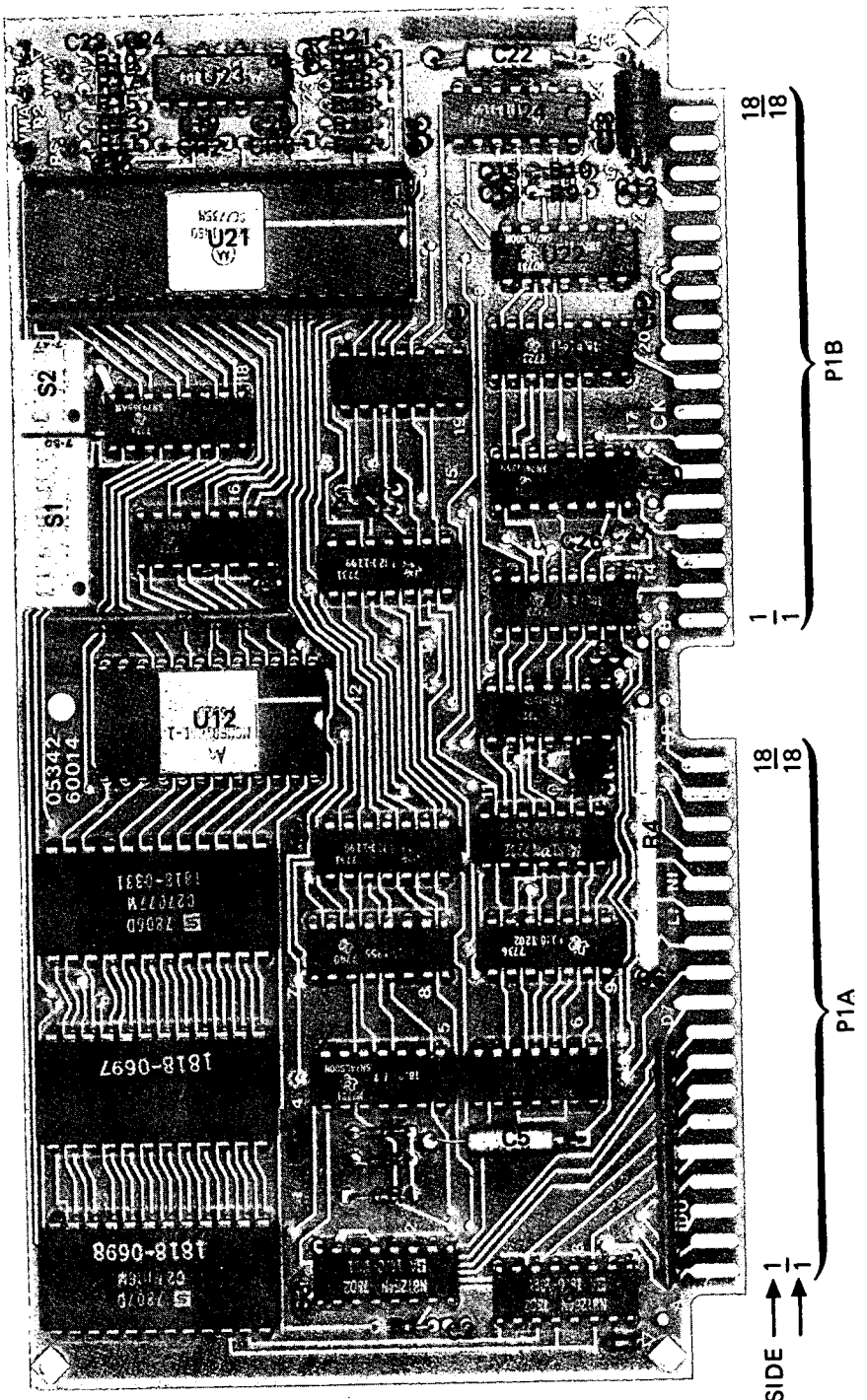

NOTE: C28 MOUNTED ON BACK OF BOARD

Part of Figure 8-37. A14 Microprocessor Assembly

Figure 8-37
A14 MICROPROCESSOR ASSEMBLY

(See Page 8-175)

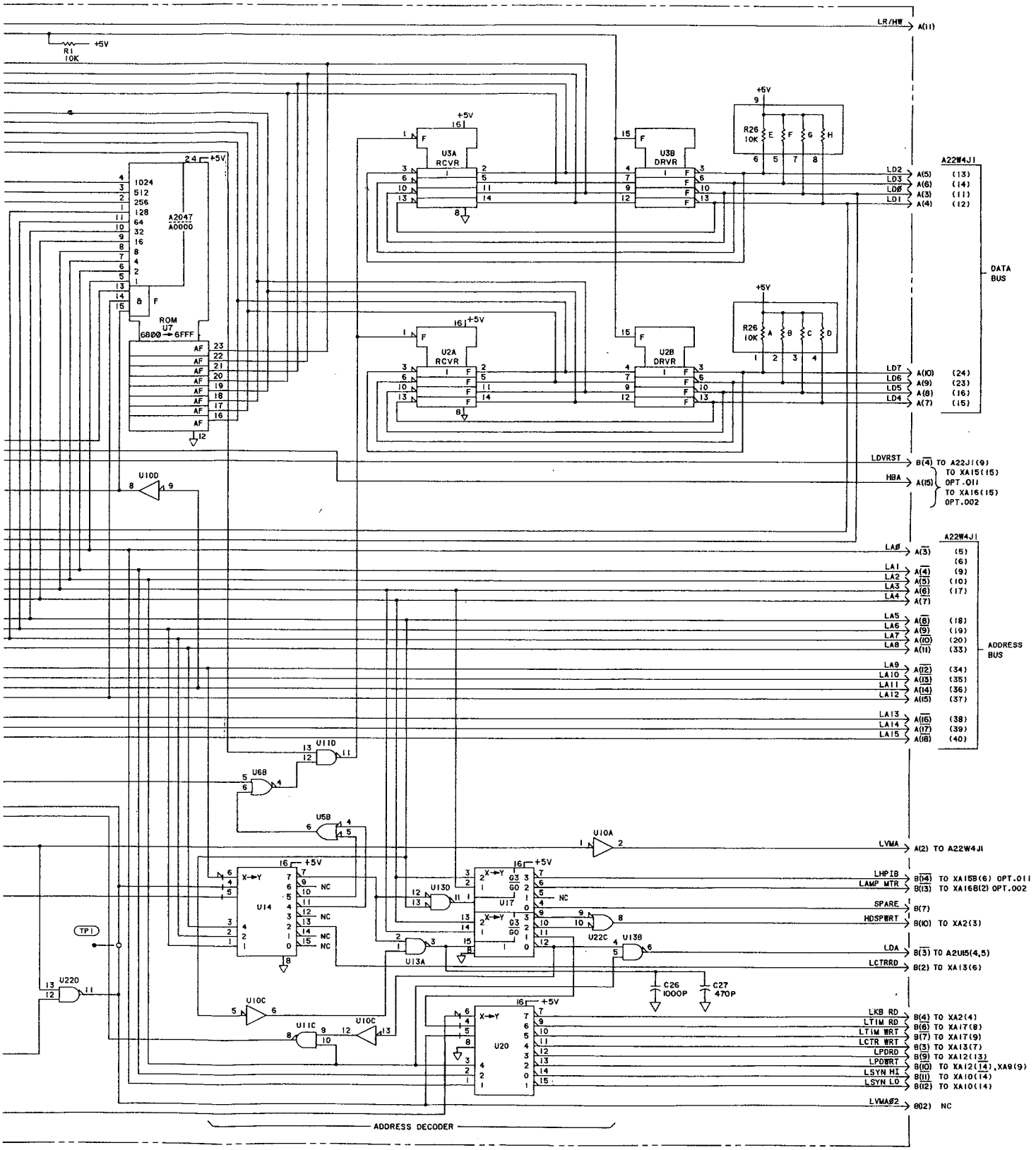

Figure 8-37. A14 Microprocessor Assembly

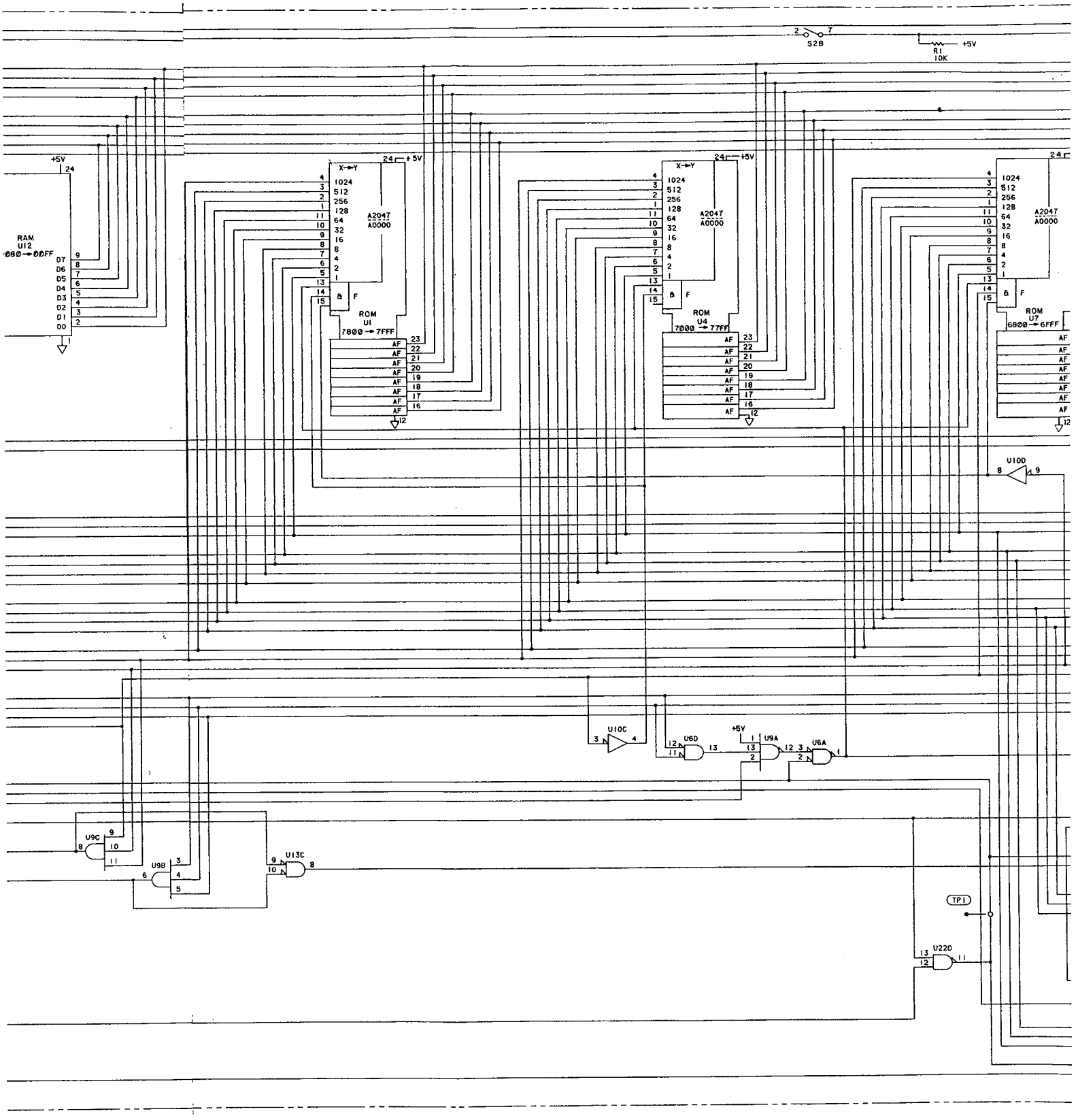
S28
R1
10K
+5V
RAM
U12
0800→0DFF
D7
D6
D5
D4
D3
D2
D1
D0
X→Y
1024
512
256
128
64
32
16
8
4
2
1
A2047
A0000
ROM
U1
7800→7FFF
ROM
U4
7000→77FF
ROM
U7
6800→6FFF
AF
U10D
U10C
U6D
U9A
U6A
U9C
U9B
U13C
TP1
U22D

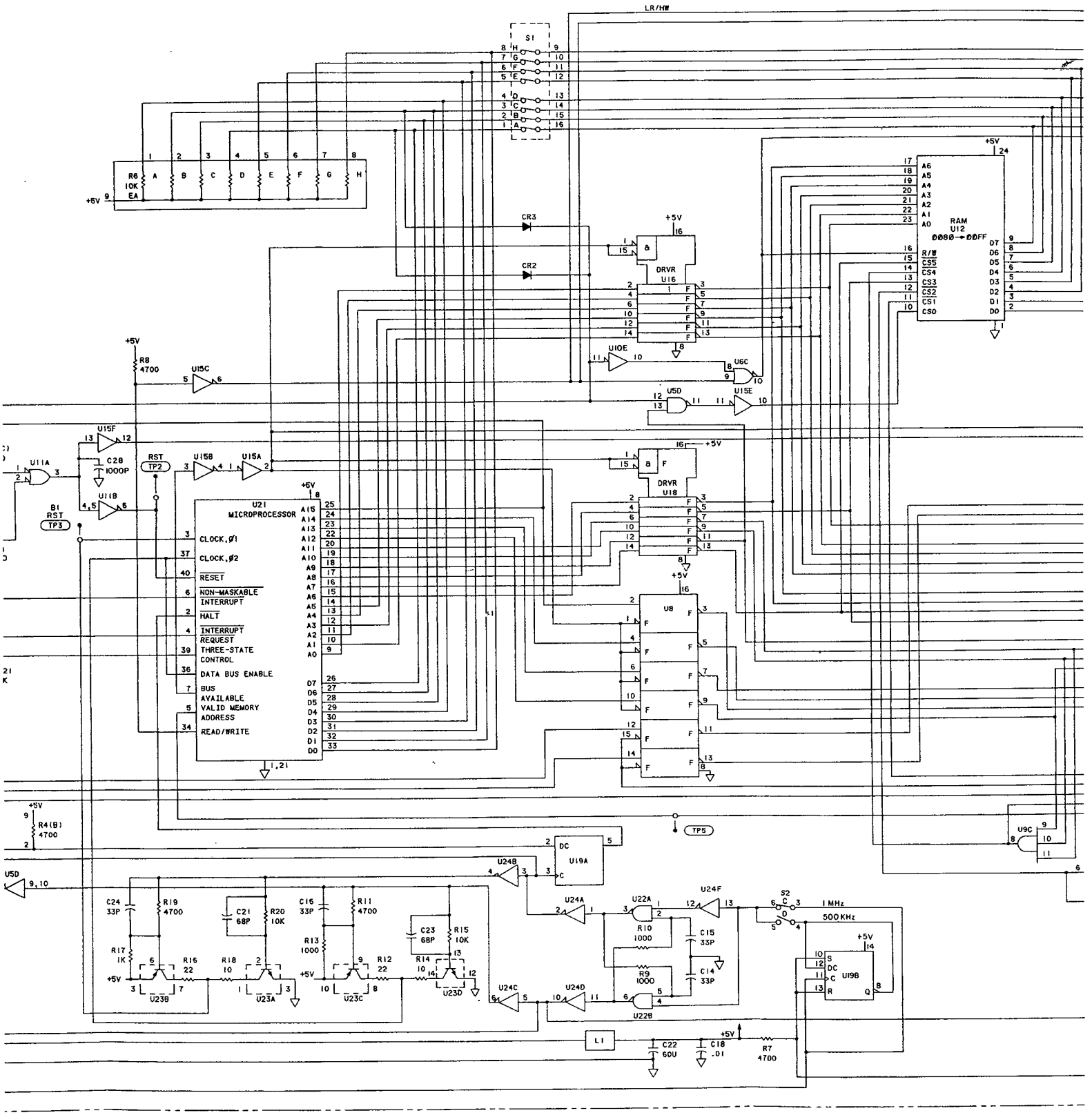
LR/HW
S1
R6 10K EA
+5V
CR3
CR2
DRVR U16
RAM U12 ØØ8Ø→ØØFF
R8 4700
U15C
U15F
U11A
C28 1000P
U11B
RST TP2
U15B
U15A
B1 RST TP3
DRVR U18
U21 MICROPROCESSOR
CLOCK,Ø1
CLOCK,Ø2
RESET
NON-MASKABLE INTERRUPT
HALT
INTERRUPT REQUEST
THREE-STATE CONTROL
DATA BUS ENABLE
BUS AVAILABLE
VALID MEMORY ADDRESS
READ/WRITE
U8
U10E
U6C
U5D
U15E
U9C
TP5
R4(B) 4700
U5D 9,10
C24 33P
R19 4700
C21 68P
R20 10K
C16 33P
R11 4700
R13 1000
C23 68P
R15 10K
R17 1K
R16 22
R18 10
R12 22
R14 10
U23B
U23A
U23C
U23D
U19A
U24B
U24A
U22A
U24F
S2
1 MHz
500 KHz
R10 1000
C15 33P
R9 1000
C14 33P
U19B
U24C
U24D
U22B
L1
C22 60U
C18 .01
R7 4700

A14 PROCESSOR ASSEMBLY (05342-60014) SERIES 1840

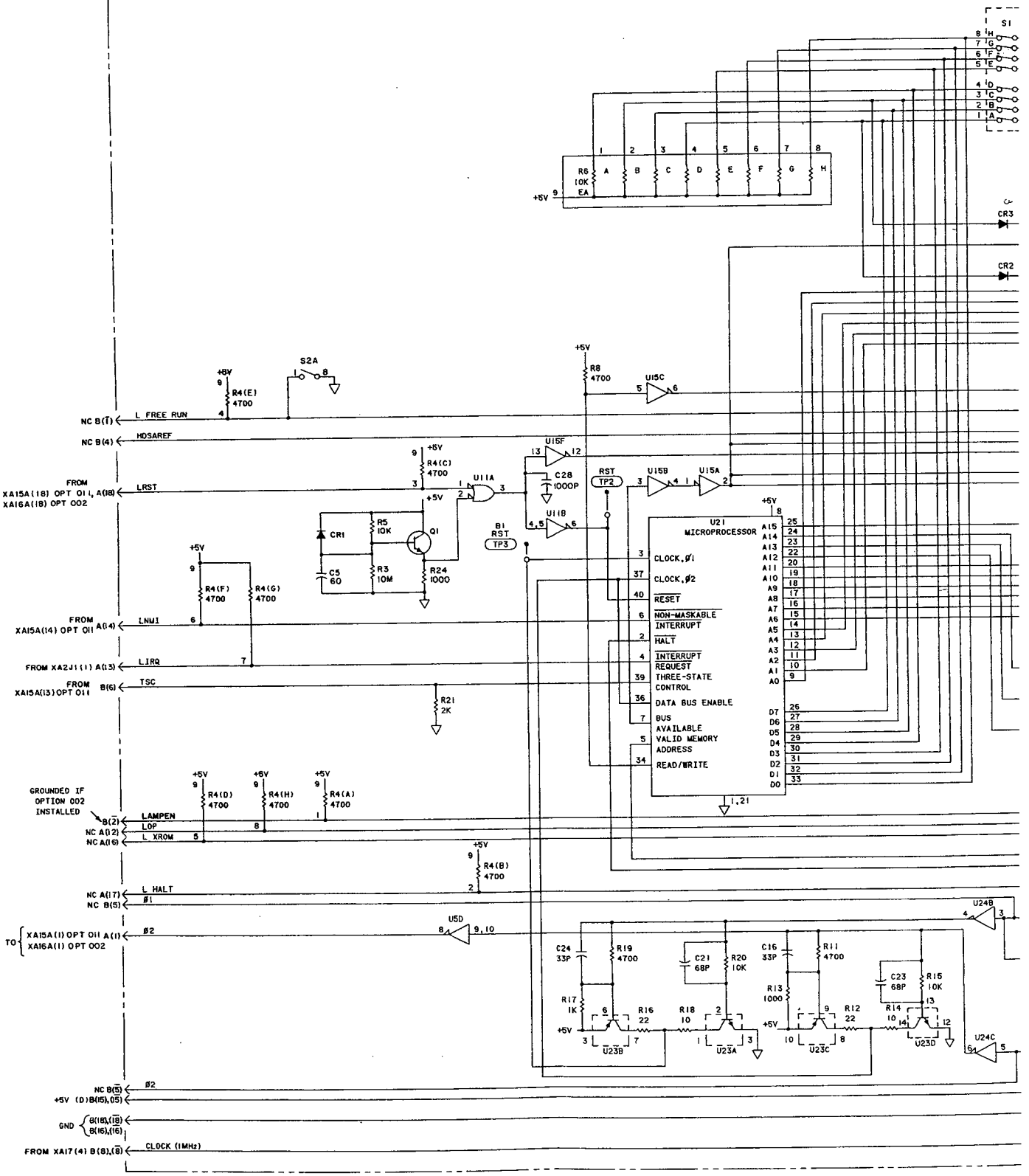

REFERENCE DESIGNATIONS

A14
C1-C24 CR1-CR3 L1 R1-R21 S1, S2 TP1-TP6 U1-U24

TABLE OF ACTIVE ELEMENTS

REFERENCE DESIGNATION	HP PART NUMBER	MFG OR INDUSTRY PART NUMBER
CR1-CR3	1901-0040	Same
Q1	1854-0574	Same
U1	1818-0698	Same
U2, U3	1820-1081	AM8T26
U4	1818-0697	Same
U5, U22	1820-1197	SN74LS00N
U6	1820-1144	9LS02PC
U7	1818-0706	Same
U8	1820-1255	DM8098N
U9	1820-1202	9LS10PC
U10, U15, U24	1820-1199	SN74LS04N
U11	1820-1425	SN74LS132N
U12	1818-0135	MC6810L-1
U13	1820-1208	73LS32A
U14	1820-1240	SN74S138N
U16, U18	1820-1368	DM8096N
U17	1820-1072	SN74S139N
U19	1820-1112	SN74LS74N
U20	1820-1240	SN74S138N
U21	1820-1480	MC6800L
U23	1820-1804	MPQ6842

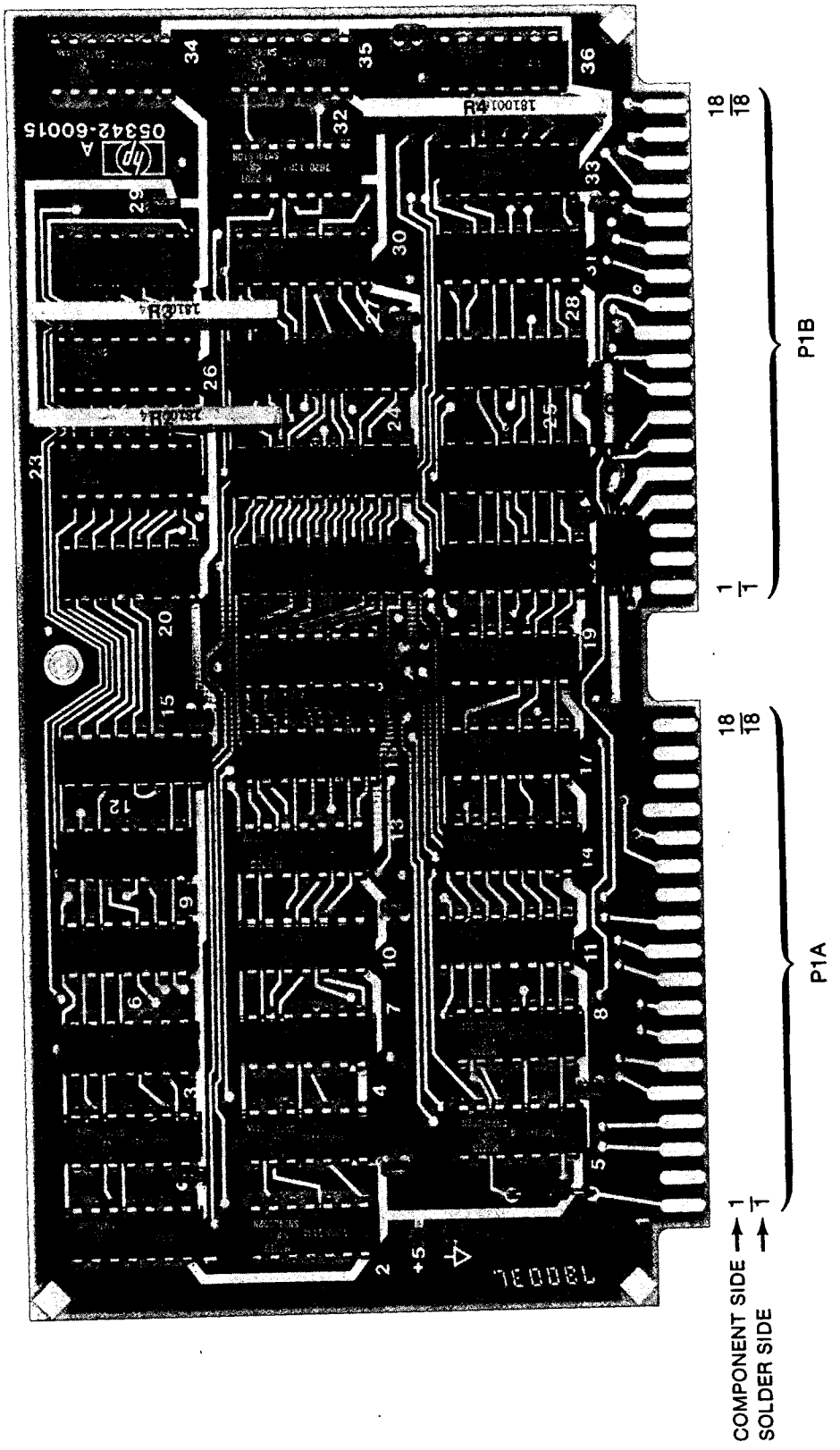

Part of Figure 8-38. Option 011 A15 HP-IB Assembly

Figure 8-38
OPTION 011 A15 HP-IB ASSEMBLY

(See Page 8-177)

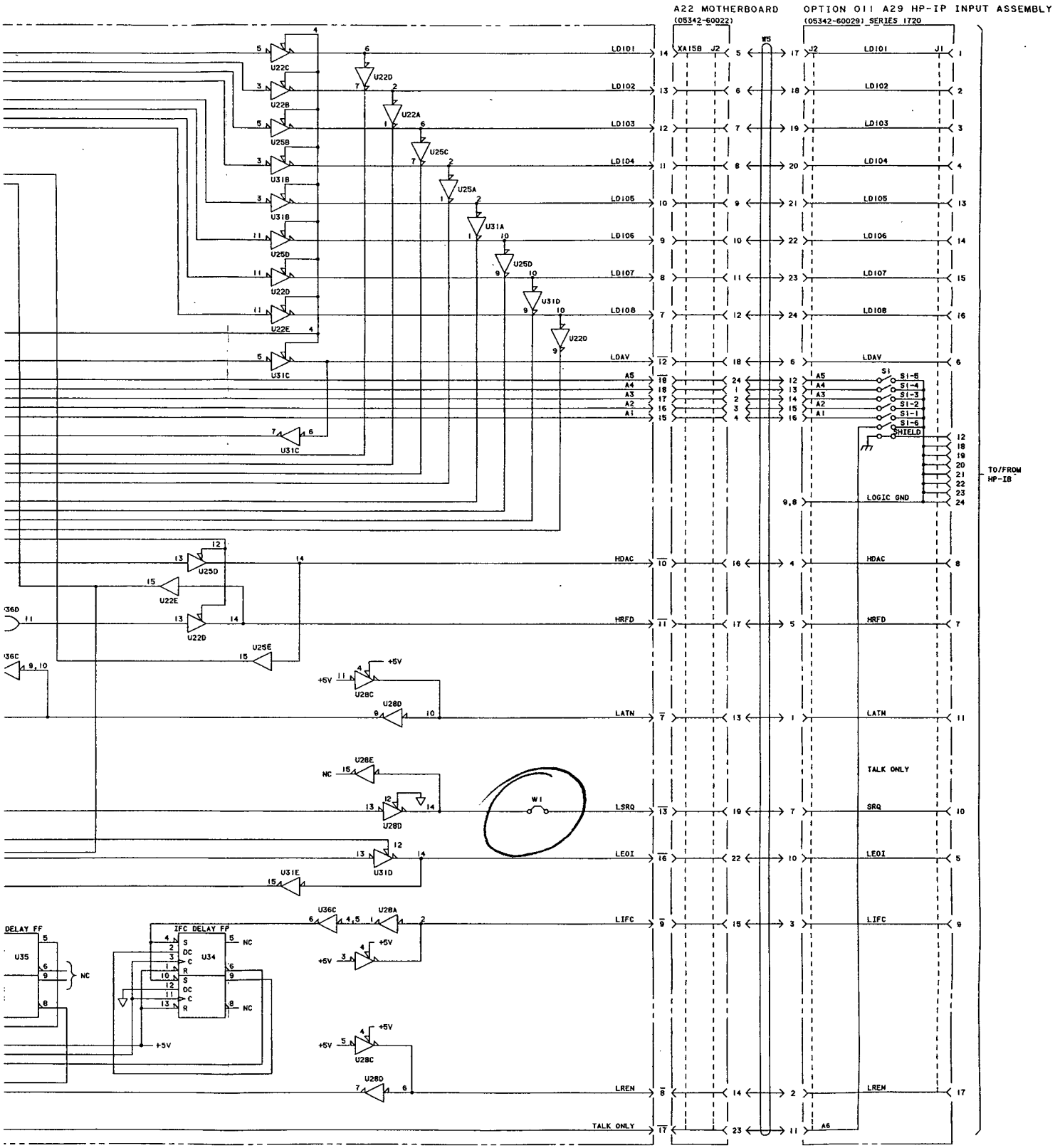

Figure 8-38. Option 011 A15 HP-IB Assembly

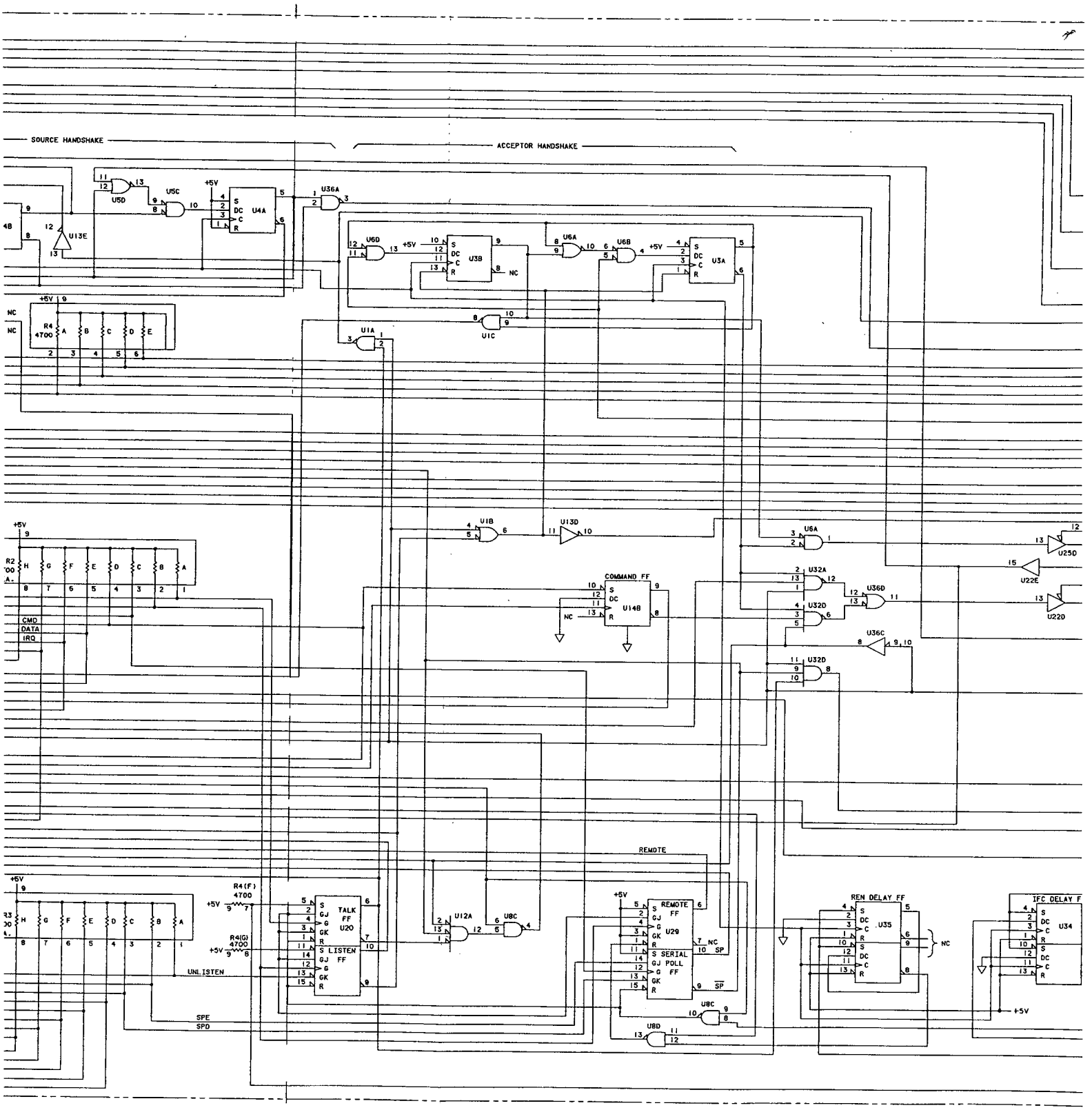
SOURCE HANDSHAKE
ACCEPTOR HANDSHAKE
U5D
U5C
U4A
U13E
U36A
U6D
U3B
U6A
U6B
U3A
U1C
U1A
R4
4700
U1B
U13D
COMMAND FF
U14B
U6A
U32A
U36D
U32D
U36C
U25D
U22E
U22D
CMD
DATA
IRQ
REMOTE
R4(F)
4700
R4(G)
4700
TALK
FF
U20
S LISTEN
FF
UNLISTEN
SPE
SPD
U12A
U8C
REMOTE
FF
U29
S SERIAL
GJ POLL
FF
U8D
REN DELAY FF
U35
IFC DELAY F
U34
NC
SP
+5V

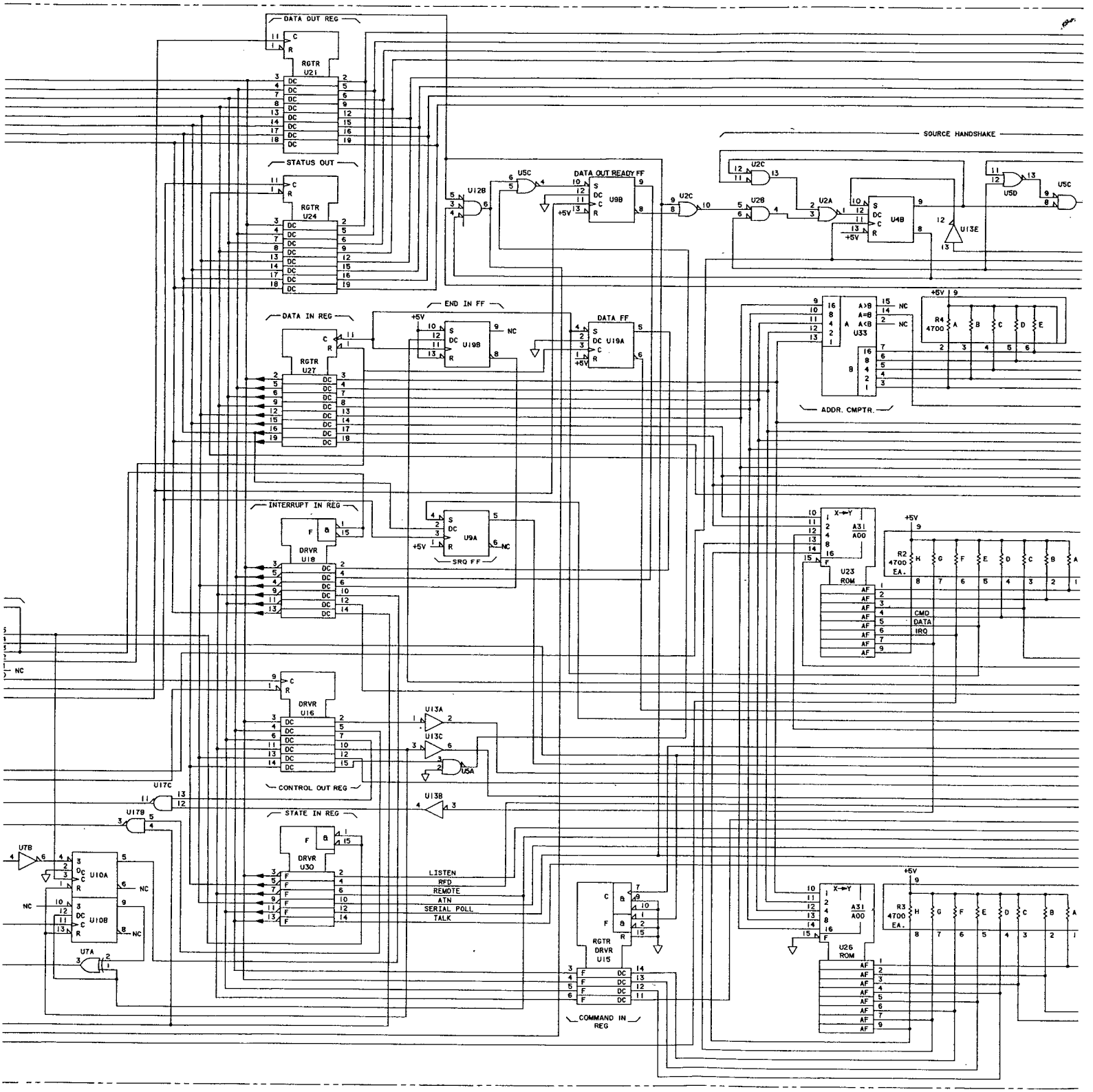
DATA OUT REG
RGTR U21
STATUS OUT
RGTR U24
SOURCE HANDSHAKE
DATA OUT READY FF
U98
U5C
U12B
U2C
U2B
U2A
U4B
U5D
U13E
END IN FF
U19B
DATA FF
U19A
DATA IN REG
RGTR U27
ADDR. CMPTR.
U33
R4 4700
INTERRUPT IN REG
DRVR U18
U9A
SRQ FF
U23 ROM
R2 4700 EA.
CMD
DATA
IRQ
DRVR U16
U13A
U13C
U5A
U17C
U17B
U13B
CONTROL OUT REG
STATE IN REG
DRVR U30
U7B
U10A
U10B
U7A
LISTEN
REQ
REMOTE
ATN
SERIAL POLL
TALK
RGTR DRVR U15
COMMAND IN REG
U26 ROM
R3 4700 EA.
NC
+5V

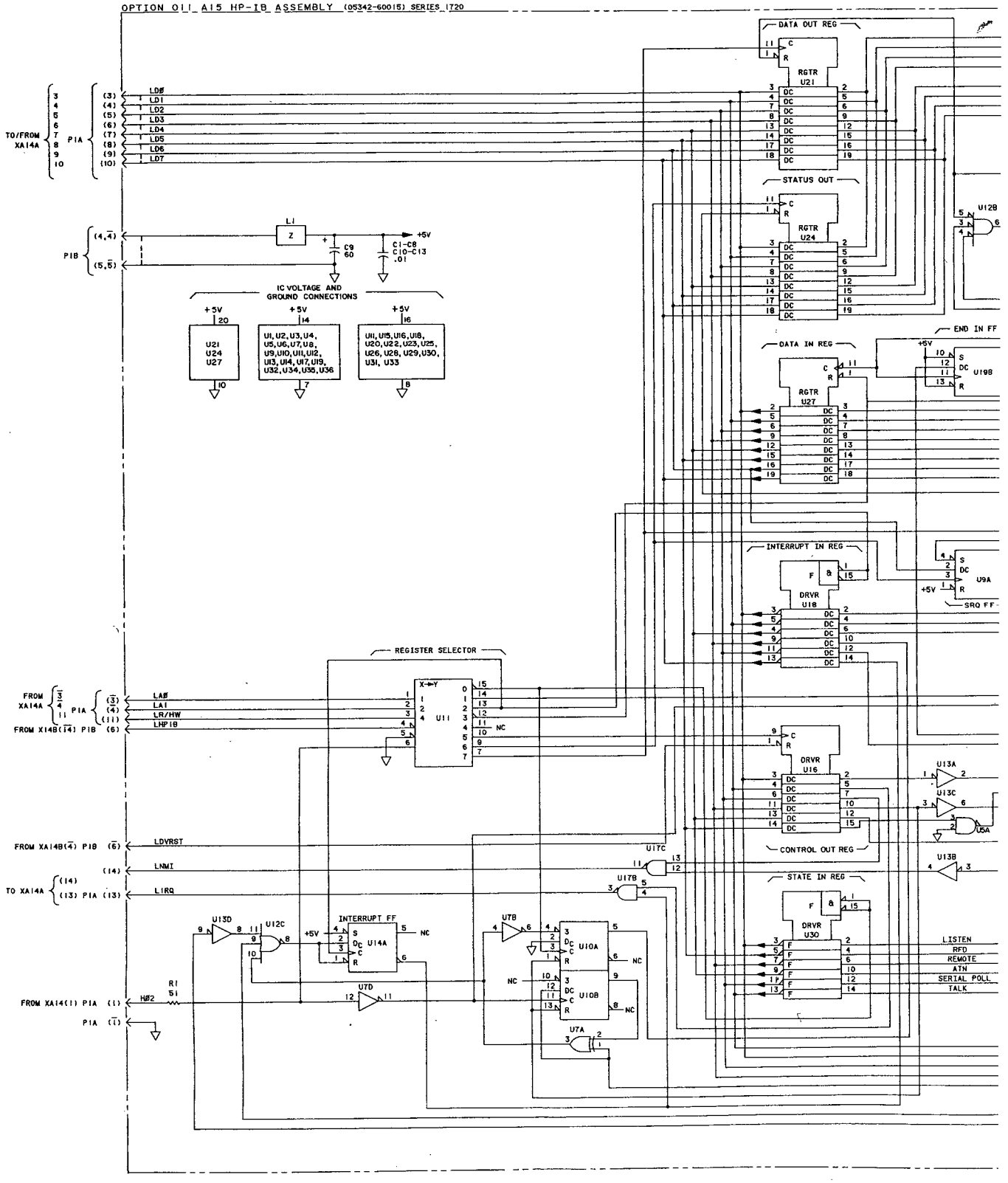
OPTION 011 A15 HP-IB ASSEMBLY (05342-60015) SERIES 1720
DATA OUT REG
RGTR U21
STATUS OUT
RGTR U24
DATA IN REG
RGTR U27
END IN FF
U12B
U19B
INTERRUPT IN REG
DRVR U18
U9A
SRQ FF
REGISTER SELECTOR
U11
DRVR U16
U13A
U13C
U5A
CONTROL OUT REG
U13B
STATE IN REG
DRVR U30
LISTEN
RFD
REMOTE
ATN
SERIAL POLL
TALK
INTERRUPT FF
U14A
U10A
U10B
U12C
U13D
U7A
U7B
U7C
U7D
TO/FROM XA14A
P1A
P1B
LD0
LD1
LD2
LD3
LD4
LD5
LD6
LD7
L1
Z
C9 60
C1-C8 C10-C13 .01
+5V
IC VOLTAGE AND GROUND CONNECTIONS
U21 U24 U27
U1, U2, U3, U4, U5, U6, U7, U8, U9, U10, U11, U12, U13, U14, U17, U19, U32, U34, U35, U36
U11, U15, U16, U18, U20, U22, U23, U25, U26, U28, U29, U30, U31, U33
FROM XA14A P1A
FROM X14B P1B
LA0
LA1
LR/HW
LHP1B
LDVRST
LNMI
LIRQ
TO XA14A P1A
FROM XA14(1) P1A
P1A
H@2
R1 51

REFERENCE DESIGNATIONS

A15
C1-C3 L1 R1-R4 U1-U36

TABLE OF ACTIVE ELEMENTS

REFERENCE DESIGNATION	HP PART NUMBER	MFG OR INDUSTRY PART NUMBER
U1, U36	1820-1197	SN74LS00N
U2, U5, U6, U8	1820-1144	9LS02PC
U3, U4, U9 U10, U14, U19, U34, U35	1820-1112	SN74LS74N
U7	1820-1211	SN74LS86N
U11	1820-1216	SN74LS138N
U12	1820-1206	SN74LS27N
U13	1820-1199	SN74LS04N
U15	1820-1885	DM74LS173N
U16	1820-1196	AM74LS174N
U17	1820-1198	SN74LS03N
U18, U30	1820-1368	DM8096N
U20, U29	1820-1282	SN74LS109N
U21, U24, U27	1820-1997	SN74LS374PC
U22, U25, U28, U31	1820-1689	MC3446P
U23	1816-1154	Same
U26	1816-1155	Same
U32	1820-1202	9LS10PC
U33	1820-0904	93L24PC

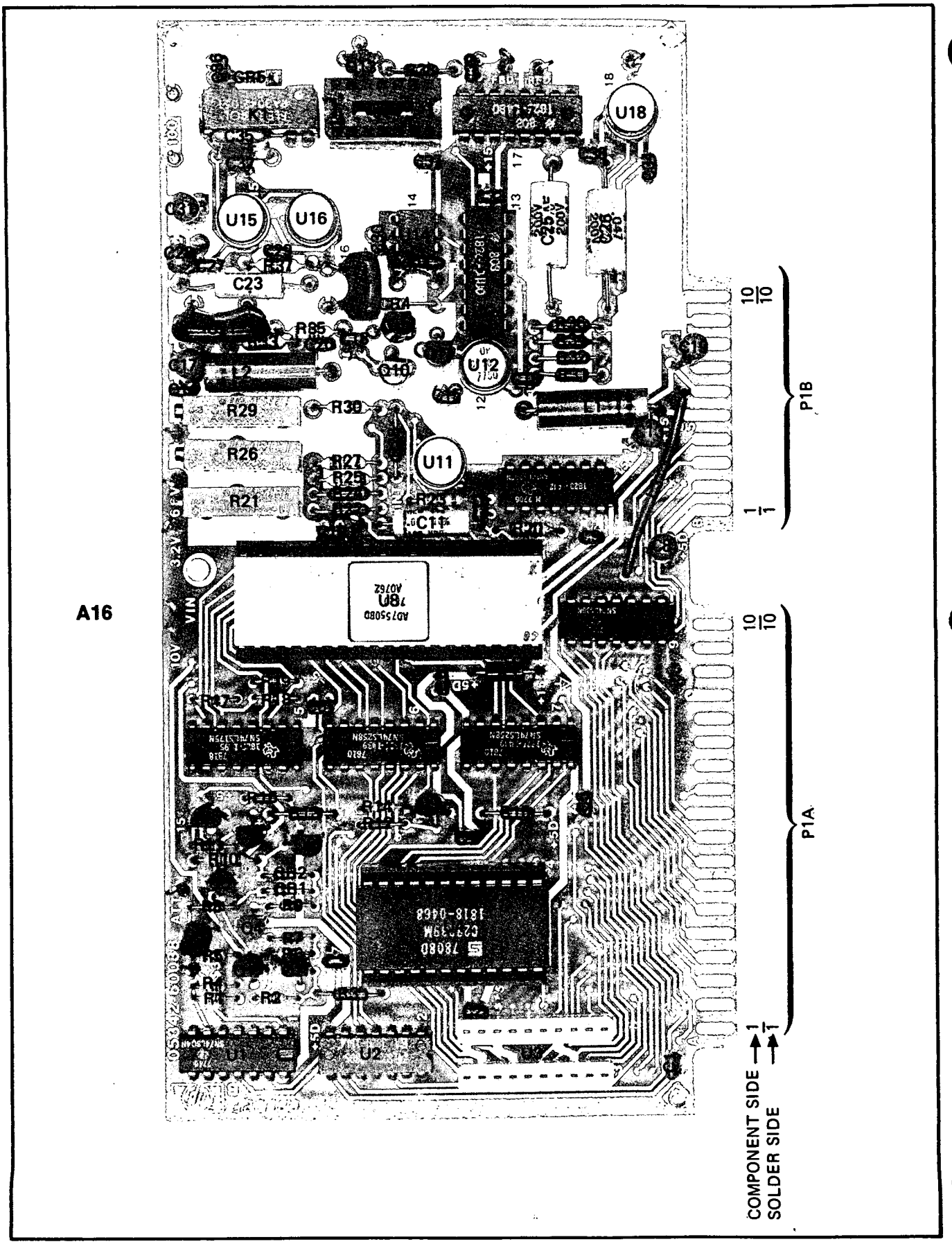

Part of Figure 8-39. Option 002 A16 Amplitude Measurements, A27 Low Frequency Amplifier, and U2 High Frequency Amplifier Assemblies

Figure 8-39
TION 002 A16 AMPLITUDE MEASUREMENTS, A27 LOW FREQUENCY AMPLIFIER, AND U2 HIGH FREQUENCY AMPLIFIER ASSEMBLIES

(See Page 8-179)

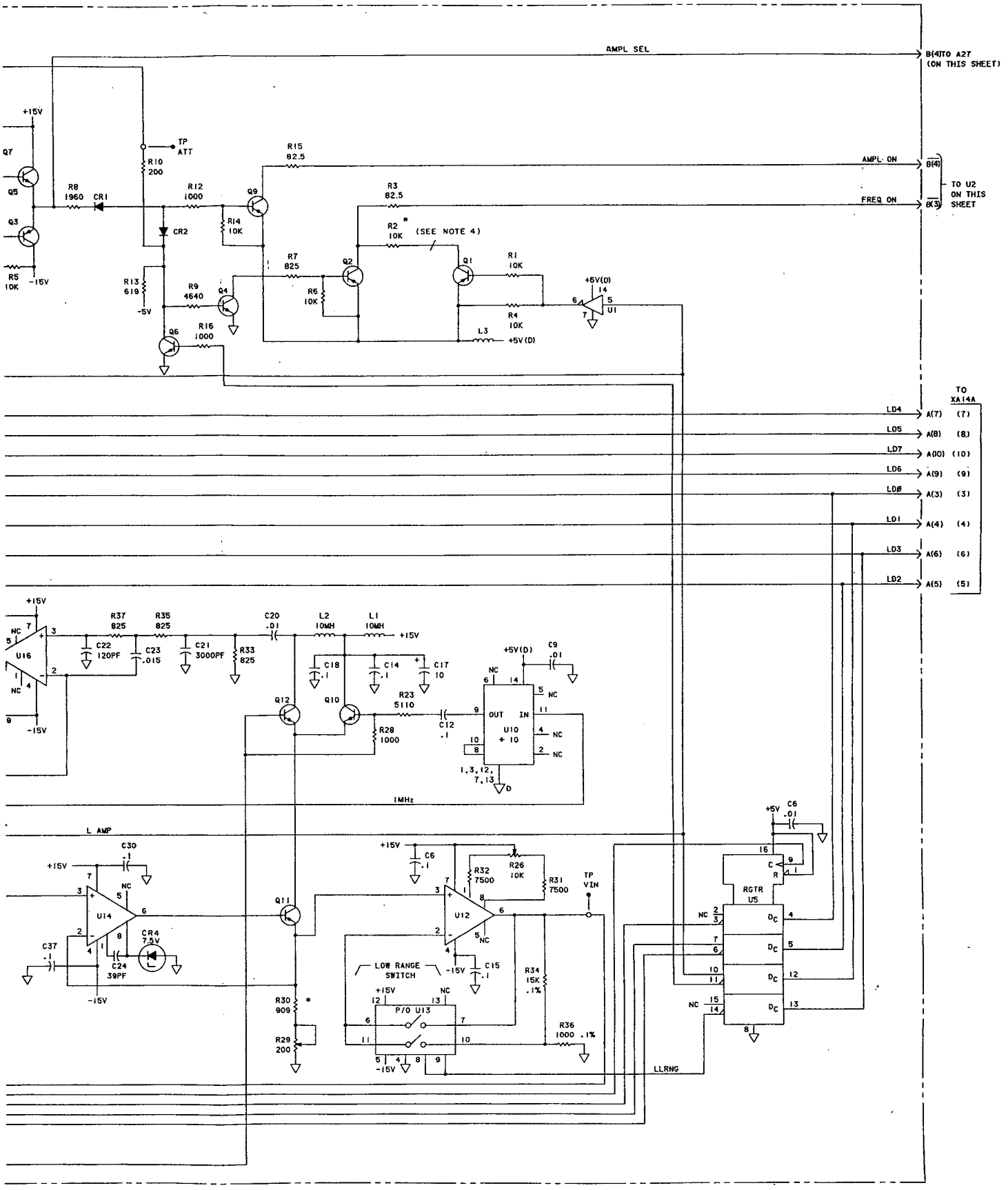

Figure 8-39. Option 002 A16 Amplitude Measurements, A27 Low Frequency Amplifier, and U2 High Frequency Amplifier Assemblies

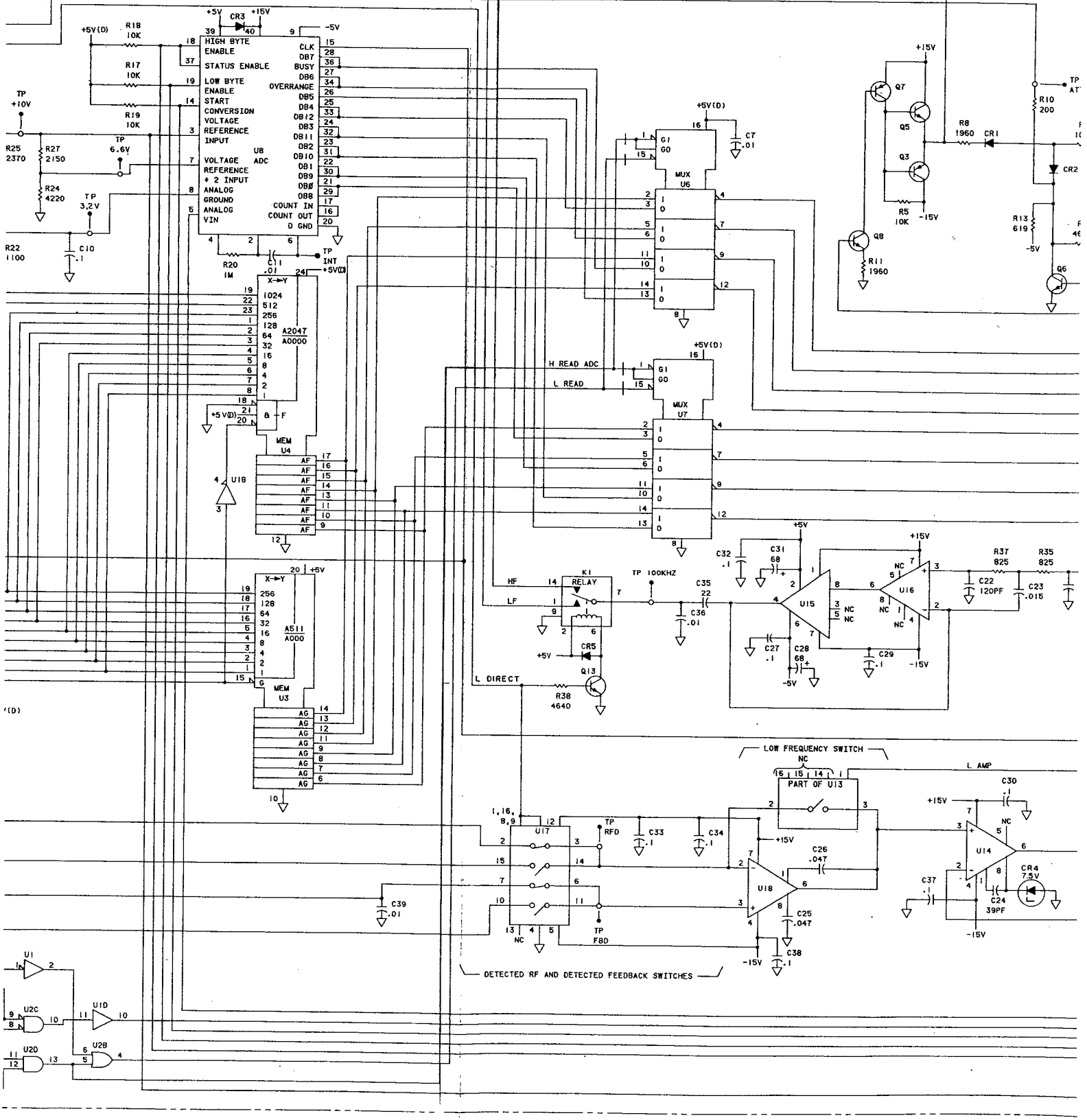
+5V
CR3
+15V
-5V
+5V(D)
R18 10K
R17 10K
R19 10K
TP +10V
R25 2370
R27 2150
R24 4220
TP 6.6V
TP 3.2V
R22 1100
C10 .1
HIGH BYTE ENABLE
STATUS ENABLE
LOW BYTE ENABLE
START CONVERSION
VOLTAGE REFERENCE INPUT
VOLTAGE REFERENCE ÷ 2 INPUT
ANALOG GROUND
ANALOG VIN
U8 ADC
CLK
DB7
BUSY
DB6
OVERRANGE
DB5
DB4
DB12
DB3
DB11
DB2
DB10
DB1
DB9
DB0
DB8
COUNT IN
COUNT OUT
D GND
R20 1M
C11 .01
TP INT
+5V(D)
X→Y
1024
512
256
128
64
32
16
8
4
2
1
A2047
A0000
MEM U4
U18
+5V(D)
8 → F
X→Y
256
128
64
32
16
8
4
2
1
A511
A000
MEM U3
'(D)
U1
U2C
U2D
U1D
U2B
C39 .01
+5V(D)
C7 .01
MUX U6
H READ ADC
L READ
MUX U7
HF
LF
K1 RELAY
TP 100KHZ
C35 22
C36 .01
CR5
L DIRECT
Q13
R38 4640
C32 .1
C31 68
U15
U16
R37 825
R35 825
C22 120PF
C23 .015
C27 .1
C28 68
C29 .1
-5V
-15V
+15V
LOW FREQUENCY SWITCH
NC
PART OF U13
L AMP
U17
TP RFD
C33 .1
C34 .1
C26 .047
U18
C25 .047
C38 .1
TP FBD
C30 .1
U14
CR4 7.5V
C37 .1
C24 39PF
DETECTED RF AND DETECTED FEEDBACK SWITCHES
Q7
Q5
Q3
R8 1960
CR1
R10 200
CR2
R5 10K
R13 619
Q8
R11 1960
Q6

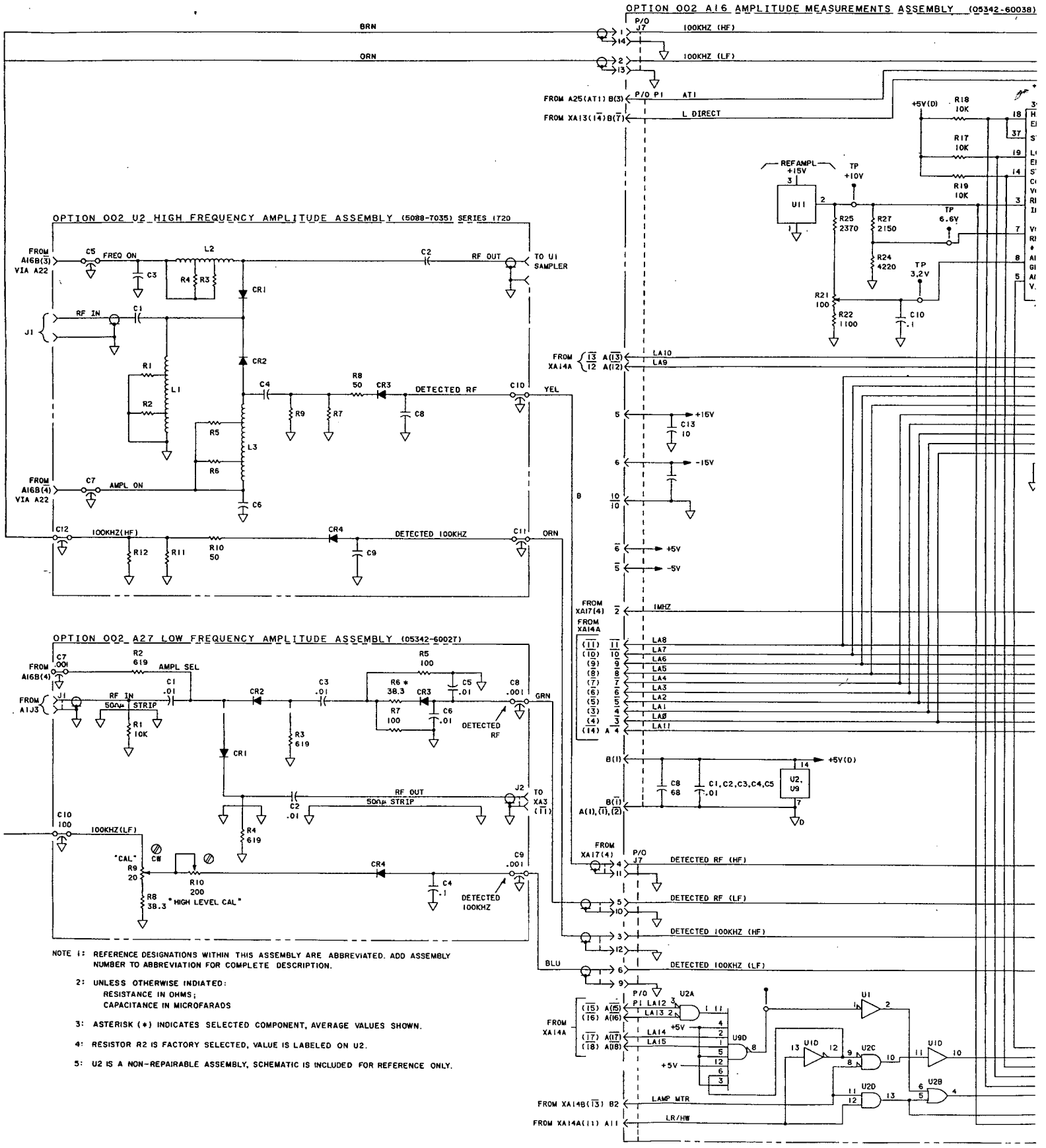

NOTE 1: REFERENCE DESIGNATIONS WITHIN THIS ASSEMBLY ARE ABBREVIATED. ADD ASSEMBLY NUMBER TO ABBREVIATION FOR COMPLETE DESCRIPTION.

2: UNLESS OTHERWISE INDIATED:
RESISTANCE IN OHMS;
CAPACITANCE IN MICROFARADS

3: ASTERISK (*) INDICATES SELECTED COMPONENT, AVERAGE VALUES SHOWN.

4: RESISTOR R2 IS FACTORY SELECTED, VALUE IS LABELED ON U2.

5: U2 IS A NON-REPAIRABLE ASSEMBLY, SCHEMATIC IS INCLUDED FOR REFERENCE ONLY.

REFERENCE DESIGNATIONS

A16 (Option 002)
C1-C39
CR1-CR5
J1-J6 (Not Assigned)
J7
K1
L1, L2
Q1-Q13
R1-R38
TP1-TP11
U1-U18

TABLE OF ACTIVE ELEMENTS

REFERENCE DESIGNATION	HP PART NUMBER	MFG OR INDUSTRY PART NUMBER
CR1, CR2, CR5	1901-0040	Same
CR3	1901-0731	Same
CR4	1901-0064	Same
Q1, Q2, Q3, Q7, Q9	1853-0058	S32248
Q4, Q5, Q6, Q8	1854-0246	2N3643
Q10, Q11, Q12	1854-0691	Same
Q13	1854-0071	Same
U1	1820-1199	SN74LS04N
U2	1820-1144	9LS02PC
U3	(See Option 002 Parts List)	
U4	1818-0468	Same
U5	1820-1195	AM74LS175A
U6, U7	1820-1439	SN74LS258N
U8	1820-1995	AD75508D
U9	1820-1207	SN74LS30N
U10	1820-1442	SN74LS290N
U11	1826-0316	LH0070-IH
U12	1826-0471	Same
U13	1826-0480	Same
U14	1820-0477	LM301AN
U15	1820-0224	LM0002CH
U16	1826-0371	LF-256H
U17	1826-0480	Same
U18	1826-0472	Same

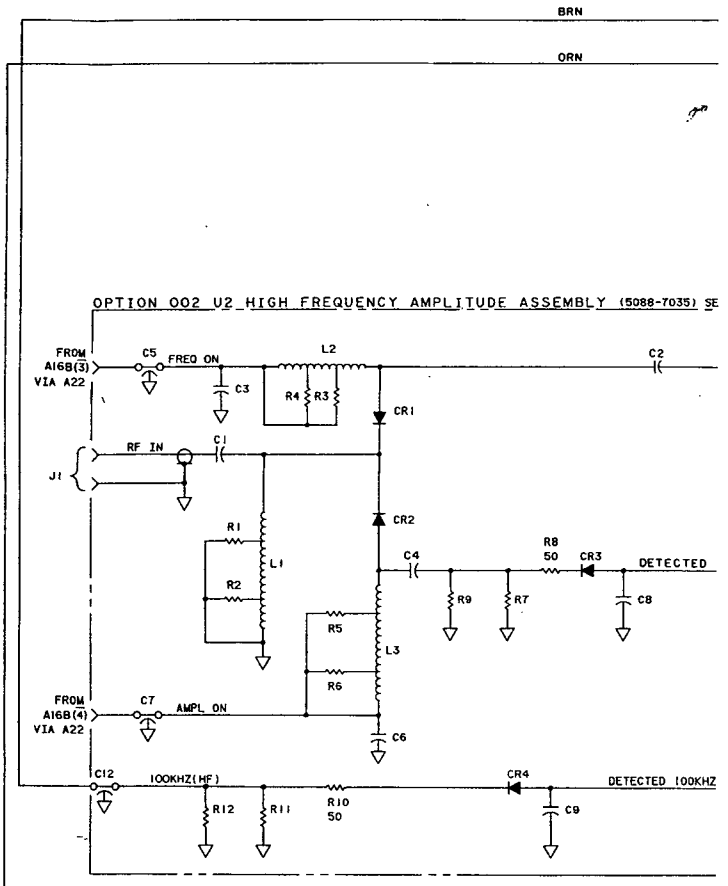

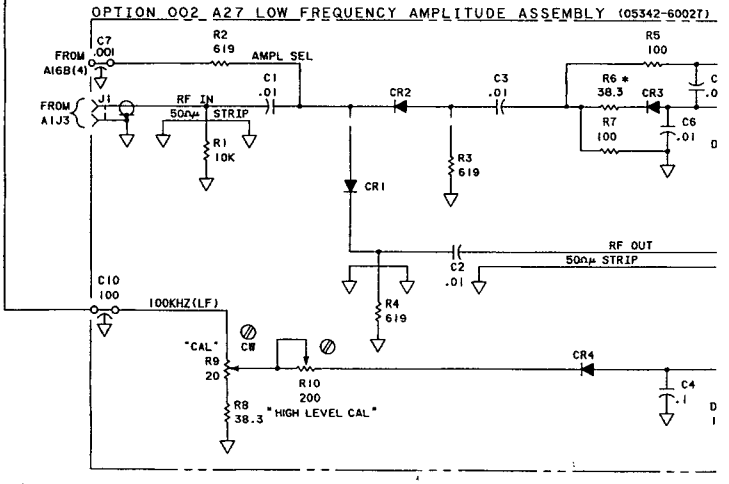

REFERENCE DESIGNATIONS

A27
C1-C10
CR1-CR4
J1, J2
R1-R10

TABLE OF ACTIVE ELEMENTS

REFERENCE DESIGNATION	HP PART NUMBER	MFR OR INDUSTRY PART NUMBER
CR1, CR2	1901-0639	5082-3080
CR3, CR4	1906-0208	Same

NOTE 1: REFERENCE DESIGNATIONS WITHIN THIS ASSEMBLY ARE ABBREVIATED. ADD ASSEMBLY NUMBER TO ABBREVIATION FOR COMPLETE DESCRIPTION.

2: UNLESS OTHERWISE INDIATED:
RESISTANCE IN OHMS;
CAPACITANCE IN MICROFARADS

3: ASTERISK (*) INDICATES SELECTED COMPONENT, AVERAGE VALUES SHOWN.

4: RESISTOR R2 IS FACTORY SELECTED, VALUE IS LABELED ON U2.

5: U2 IS A NON-REPAIRABLE ASSEMBLY, SCHEMATIC IS INCLUDED FOR REFERENCE ONLY.

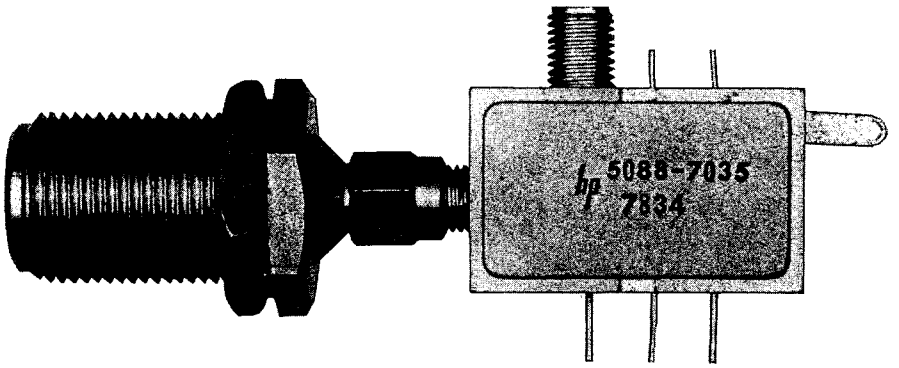

U2

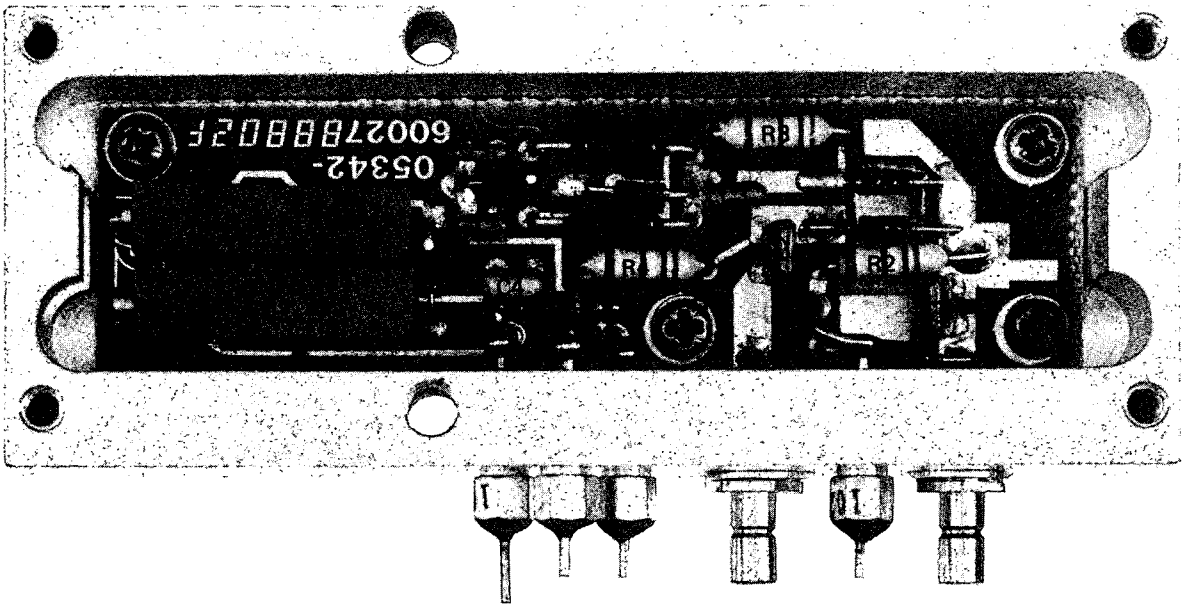

HIGH LEVEL CAL

CAL

A27 LOW FREQ
AMPLITUDE ASSY
05342-60027

C10 C9 C8 J2 C7 J1

A27

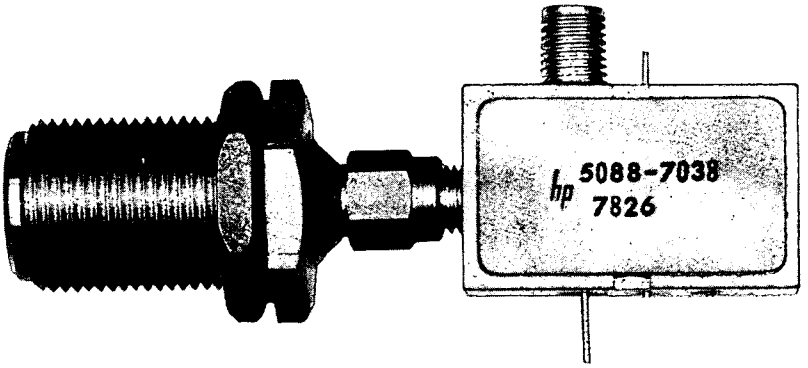

U2

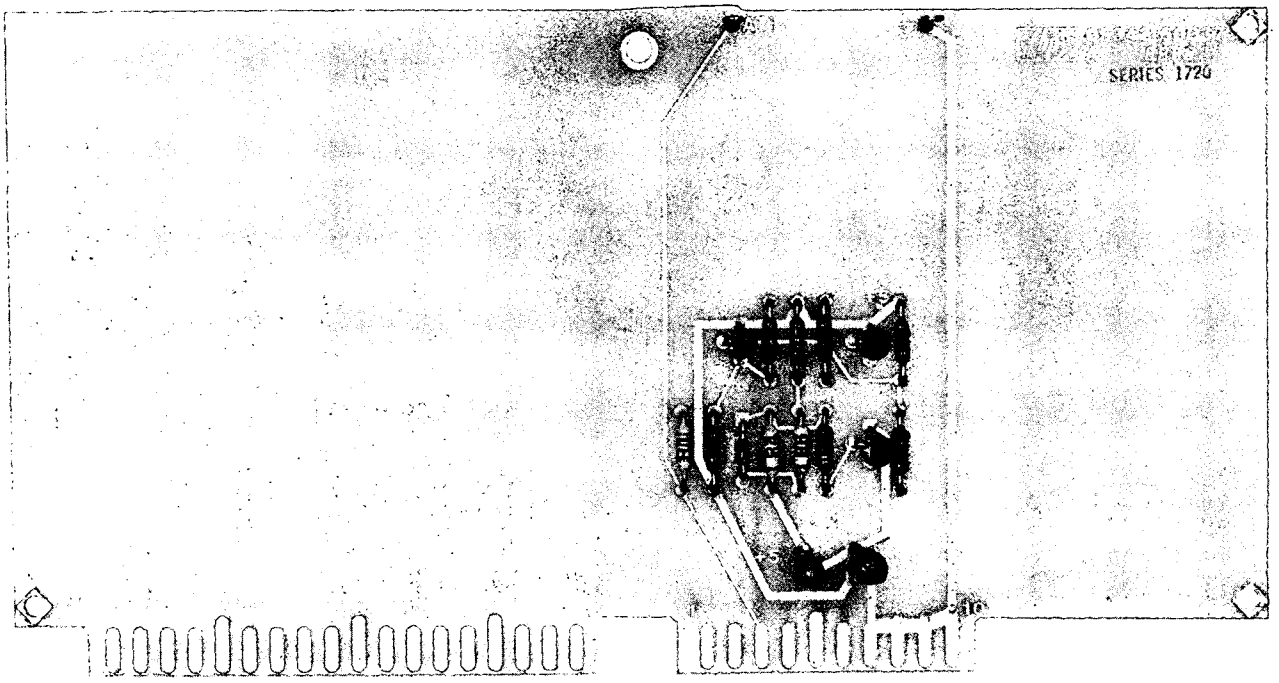

A16

REFERENCE DESIGNATIONS

A16 (Option 003)
CR1 Q1-Q5 R1-R12 U1

TABLE OF ACTIVE ELEMENTS

REFERENCE DESIGNATION	HP PART NUMBER	MFG OR INDUSTRY PART NUMBER
CR1	1901-0040	Same
Q1, Q2, Q5	1853-0058	S32248
Q3, Q4	1854-0246	2N3643
U1	1820-1199	SN74LS04N

Part of Figure 8-40. Option 003 A16 Extended Dynamic Range Assembly

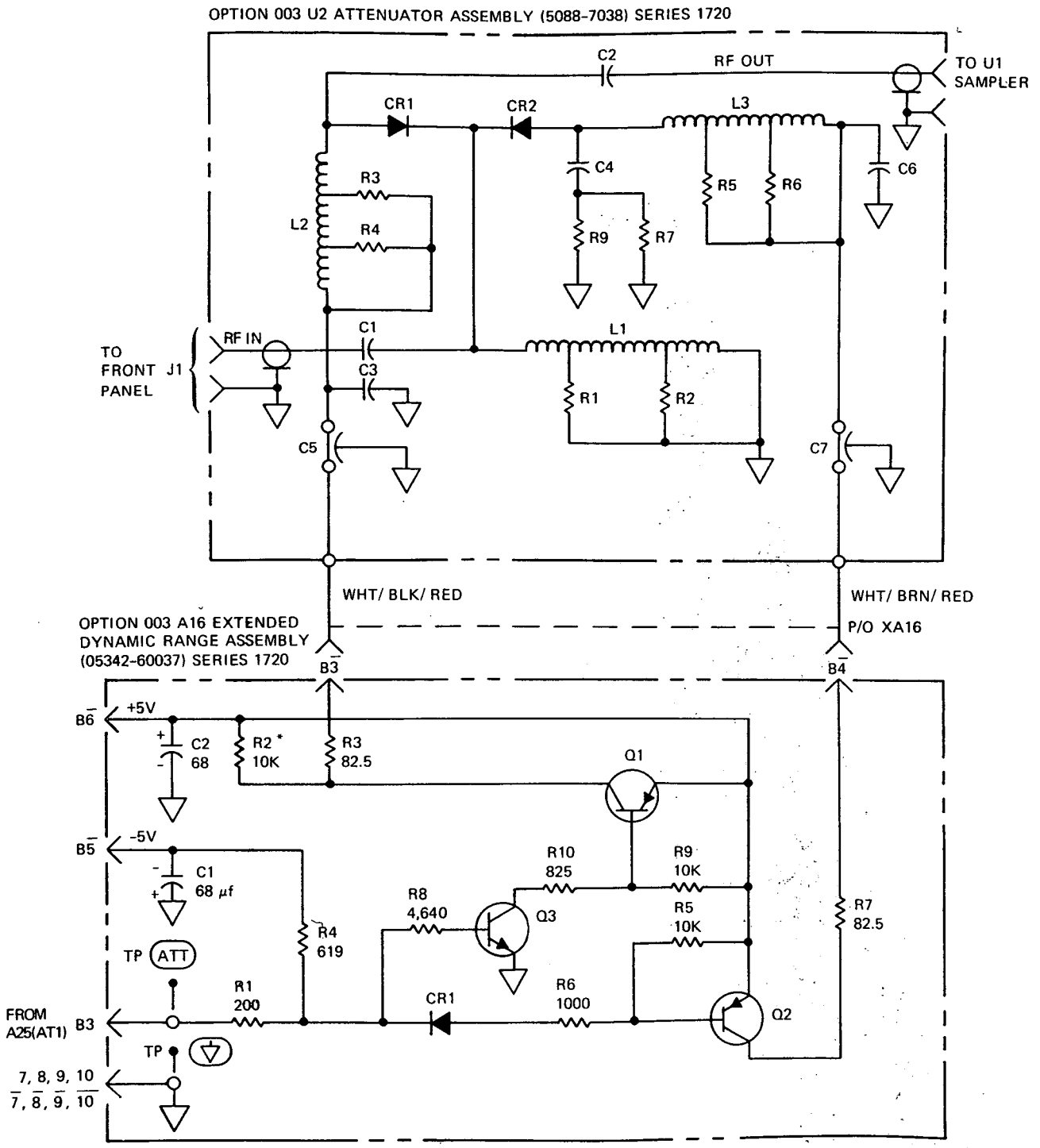

NOTES

1. REFERENCE DESIGNATIONS WITHIN THIS ASSEMBLY ARE ABBREVIATED. ADD ASSEMBLY NUMBER TO ABBREVIATION FOR COMPLETE DESCRIPTION.
2. UNLESS OTHERWISE INDICATED:
   RESISTANCE IN OHMS;
   CAPACITANCE IN MICROFARADS
   INDUCTANCE IN MICROHENRIES
3. ASTERISK (*) INDICATES SELECTED COMPONENT, AVERAGE VALUES SHOWN
4. U2 IS A NON-REPAIRABLE ASSEMBLY, SCHEMATIC IS INCLUDED FOR REFERENCE ONLY.

Figure 8-40. Option 003 A16 Extended Dynamic Range Assembly

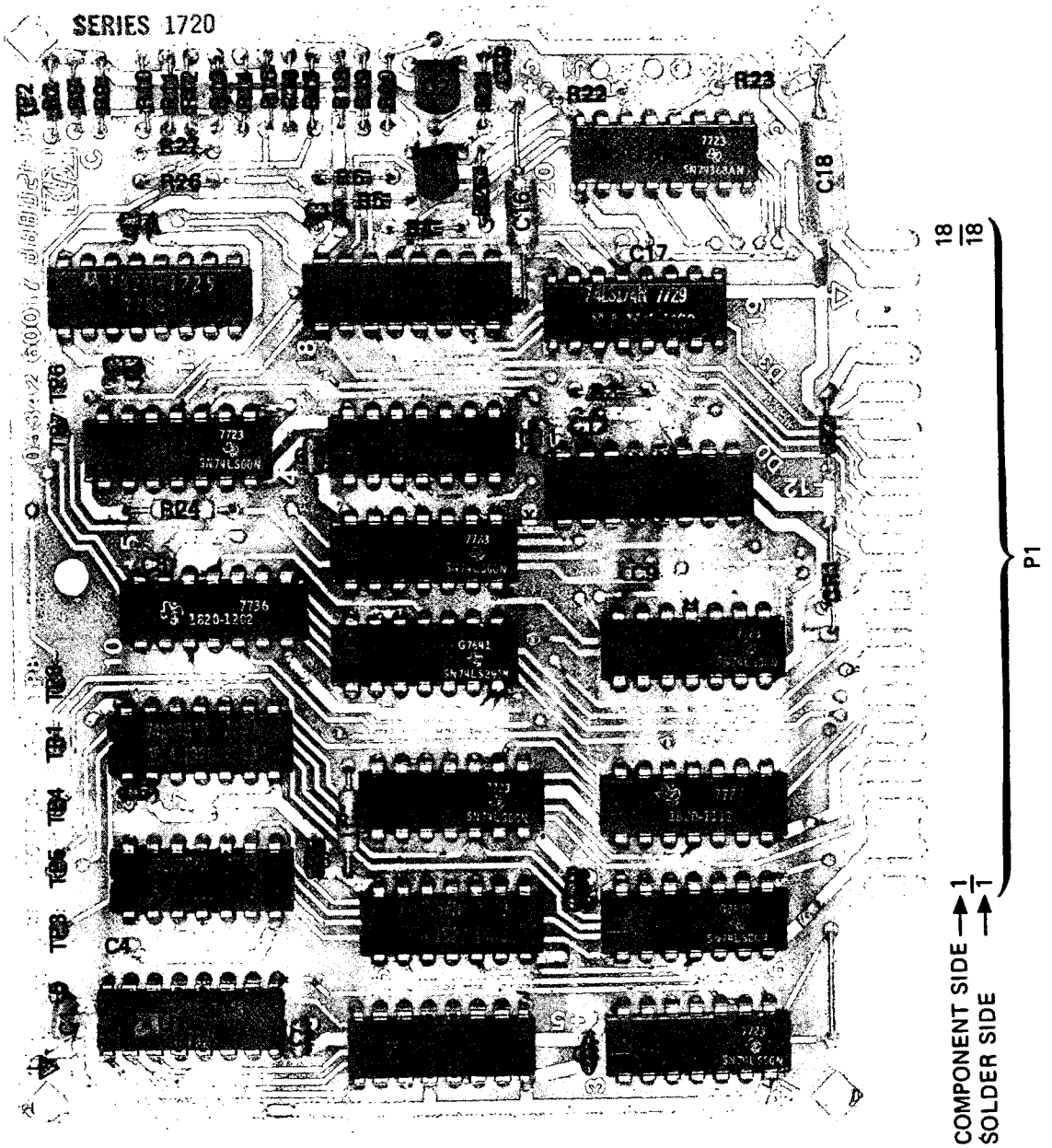

Part of Figure 8-41. A17 Timing Generator Assembly

Figure 8-41
A17 TIMING GENERATOR ASSEMBLY

(See Page 8-183)

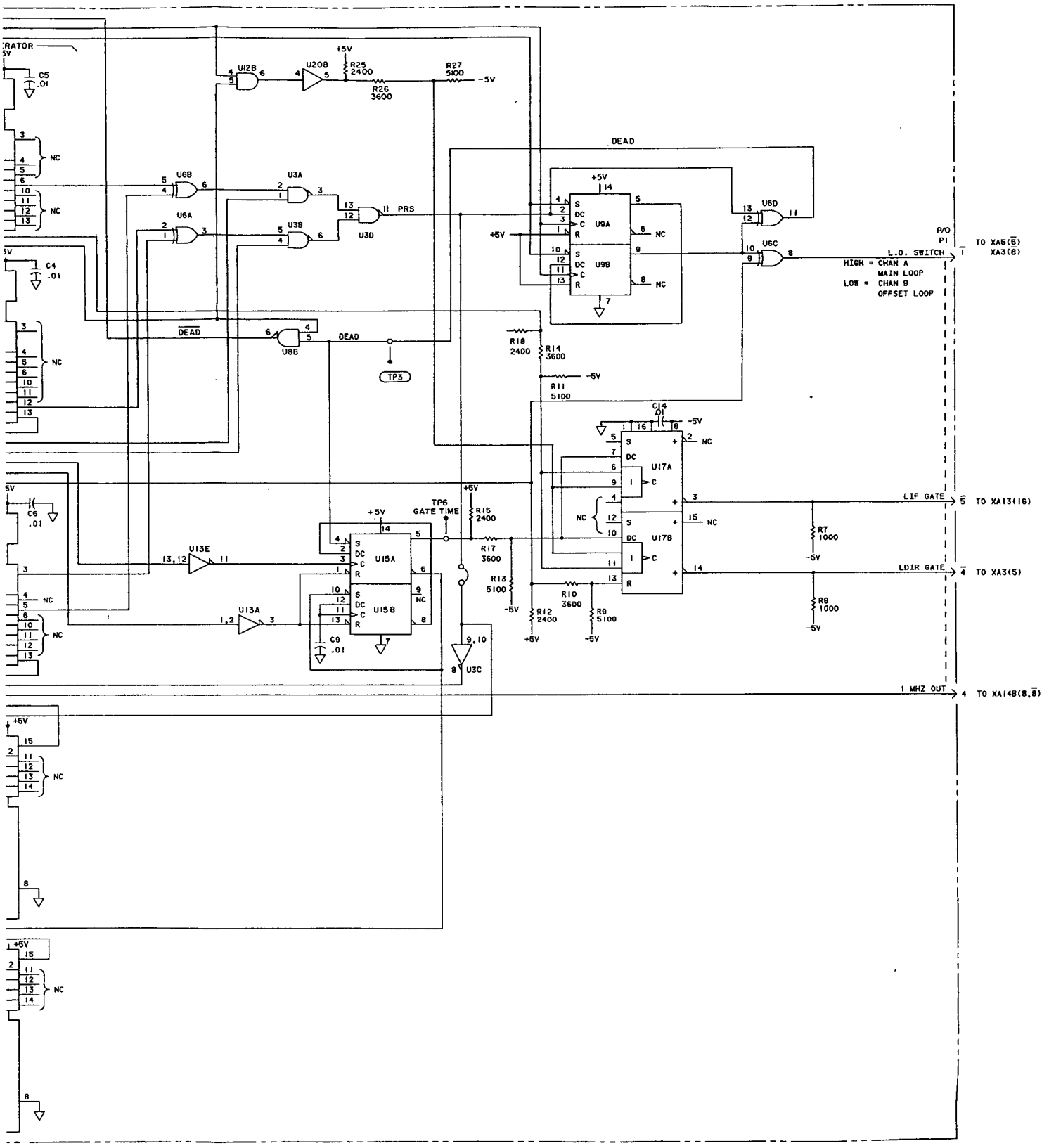

Figure 8-41. A17 Timing Generator Assembly

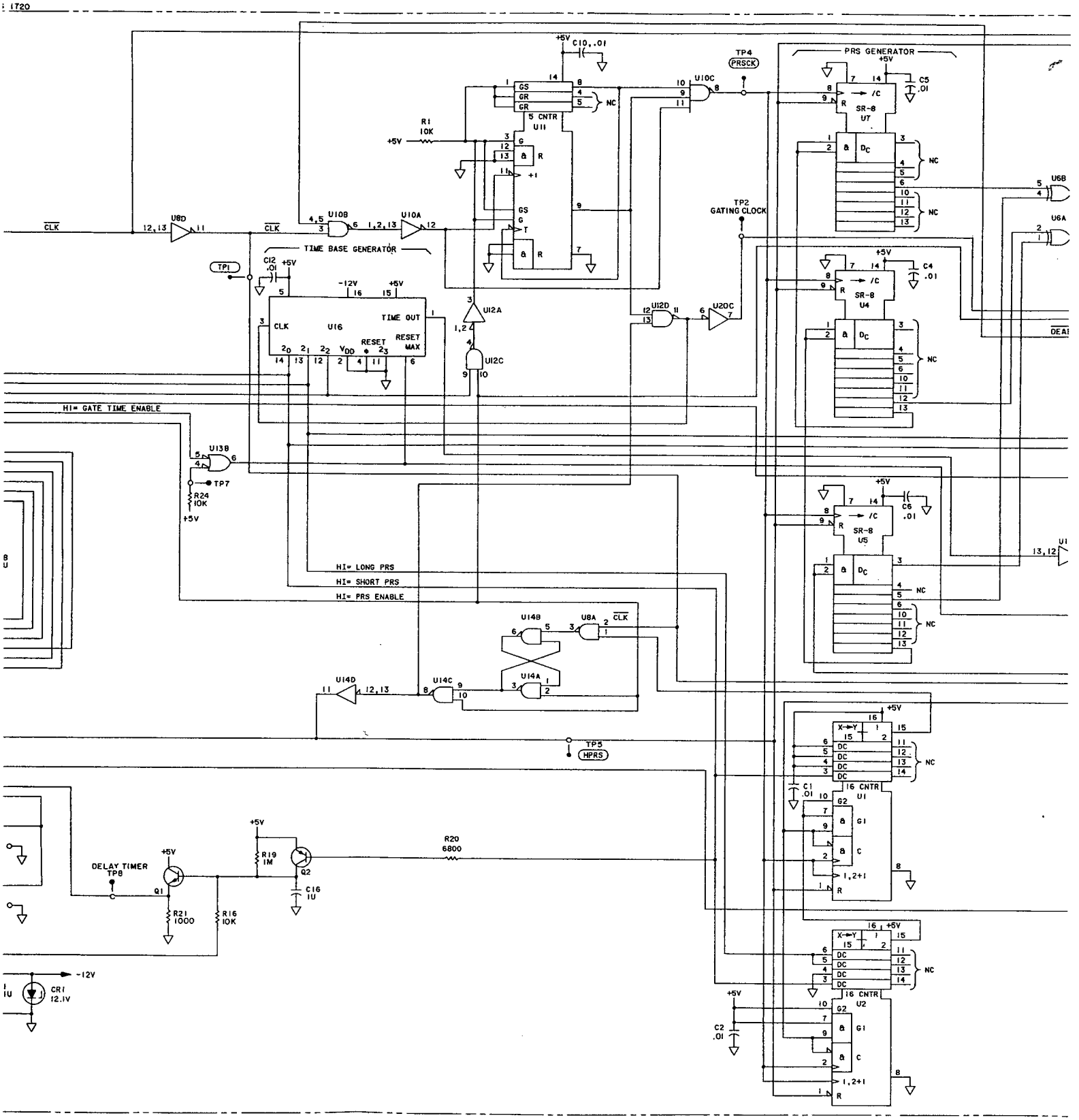

1720
PRS GENERATOR
TIME BASE GENERATOR
TP4
PRSCK
TP2
GATING CLOCK
TP1
TP5
HPRS
TP7
HI= GATE TIME ENABLE
HI= LONG PRS
HI= SHORT PRS
HI= PRS ENABLE
DELAY TIMER
TP8
U16
U11
U7
U4
U5
U1
U2
U8D
U10B
U10A
U10C
U12A
U12C
U12D
U20C
U13B
U14A
U14B
U14C
U14D
U8A
U6B
U6A
R1
10K
R24
10K
R19
1M
R20
6800
R21
1000
R16
10K
C10, .01
C12
.01
C5
.01
C4
.01
C6
.01
C1
.01
C2
.01
C16
1U
CR1
12.1V
-12V
+5V
NC

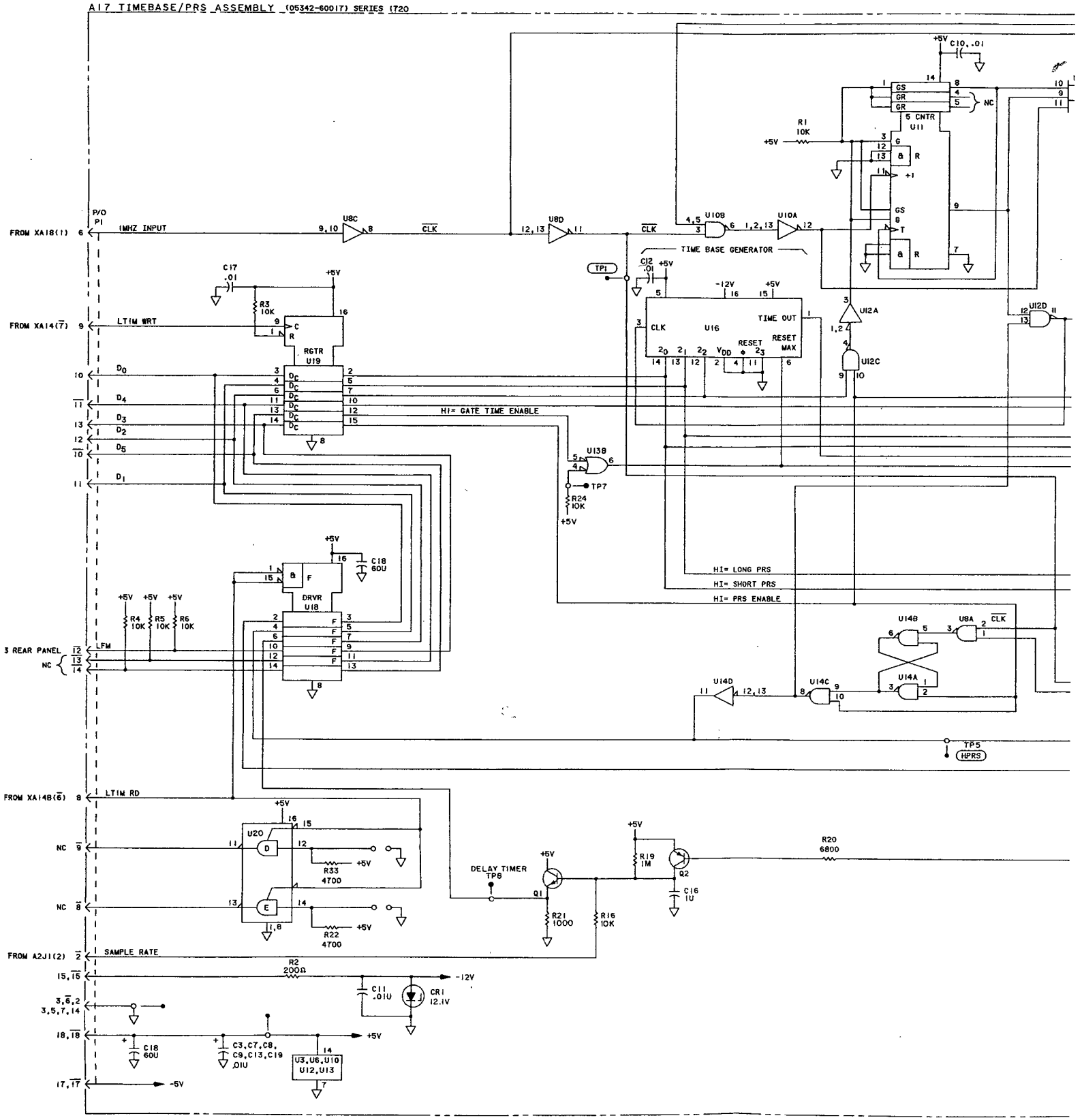
A17 TIMEBASE/PRS ASSEMBLY (05342-60017) SERIES 1720
P/O P1
FROM XA18(1) 6
1MHZ INPUT
U8C
9,10
8
CLK
U8D
12,13
11
CLK
U10B
4,5
3
6
1,2,13
U10A
12
C10, .01
+5V
GS
GR
GR
NC
5 CNTR U11
R1 10K
+5V
R
+1
GS
G
T
R
TIME BASE GENERATOR
TP1
C12 .01
+5V
-12V
+5V
16
15
5
3
CLK
U16
TIME OUT
1
RESET
RESET MAX
2_0 2_1 2_2 V_{DD} 2_3
14 13 12 2 4 11 6
U12A
1,2
U12C
9
10
U12D
12
13
11
C17 .01
+5V
R3 10K
FROM XA14($\overline{7}$) 9
LTIM WRT
C
R
16
RGTR U19
10 D_0
$\overline{11}$ D_4
13 D_3
12 D_2
$\overline{10}$ D_5
11 D_1
3 2
4 5
6 7
11 10
13 12
14 15
D_C
8
HI= GATE TIME ENABLE
U13B
5
4
6
TP7
R24 10K
+5V
+5V
16
C18 60U
1
15
B
F
DRVR U18
+5V +5V +5V
R4 10K
R5 10K
R6 10K
3 REAR PANEL $\overline{12}$
NC $\overline{13}$
$\overline{14}$
LFM
2 4 6 10 12 14
3 5 7 9 11 13
F
8
HI= LONG PRS
HI= SHORT PRS
HI= PRS ENABLE
U14B
U8A
$\overline{CLK}$
U14A
U14D
11
12,13
U14C
8
9
10
TP5
HPRS
FROM XA14B($\overline{6}$) 8
LTIM RD
+5V
16
15
U20
D
E
11
12
13
14
11,8
NC $\overline{9}$
NC $\overline{8}$
R33 4700
R22 4700
+5V
DELAY TIMER TP8
Q1
+5V
R21 1000
R16 10K
+5V
R19 1M
Q2
C16 1U
R20 6800
FROM A2J1(2) $\overline{2}$
SAMPLE RATE
R2 200Ω
15, $\overline{15}$
-12V
C11 .01U
CR1 12.1V
3, $\overline{6}$, 2
3,5,7,14
18, $\overline{18}$
+5V
C18 60U
C3,C7,C8, C9,C13,C19 .01U
U3,U6,U10 U12,U13
14
7
17, $\overline{17}$
-5V

A17 TIMEBASE/PRS ASSEMBLY (05342-60017) SERIES 1720

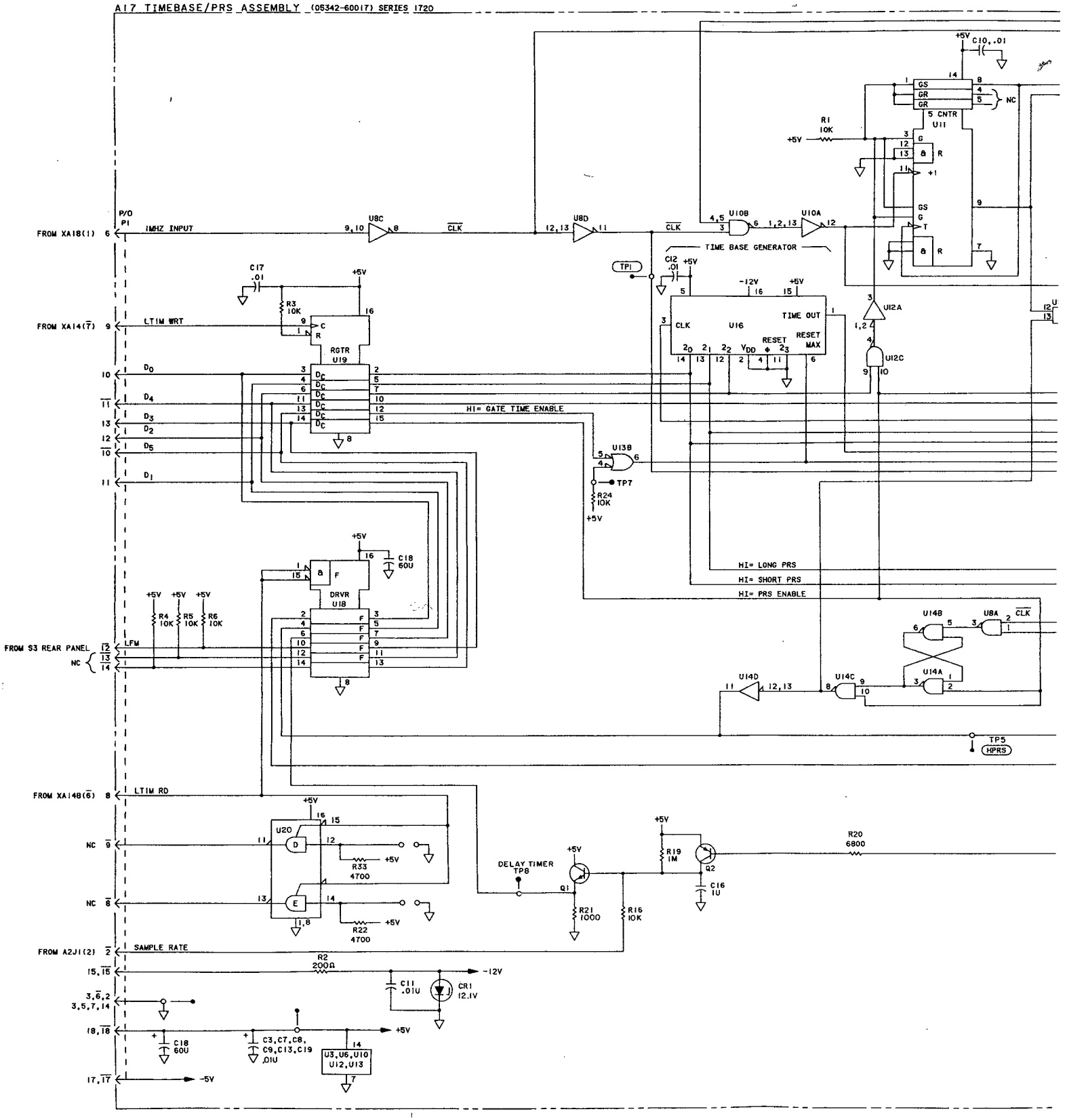

REFERENCE DESIGNATIONS

A17
C1-C19 CR1 Q1, Q2 R1-R23 TP1-TP8 U1-U19

TABLE OF ACTIVE ELEMENTS

REFERENCE DESIGNATION	HP PART NUMBER	MFG OR INDUSTRY PART NUMBER
CR1	1902-3182	FZ7268
Q1	1854-0560	SP36740
Q2	1853-0036	Same
U1, U2	1820-1430	AM74LS161N
U3, U8, U12, U13	1820-1197	SN74LS00N
U4, U5, U7	1820-1433	SN74LS164N
U6	1820-1211	SN74LS86N
U9, U14	1820-1112	SN74LS74N
U10	1820-1202	9LS10PC
U11	1820-1442	SN74LS290N
U15	1820-1180	MK5009P
U16	1820-1225	MC10231P
U17	1820-1254	DM8095N
U18	1820-1196	AM74LS174N
U19	1820-1255	DM8098N

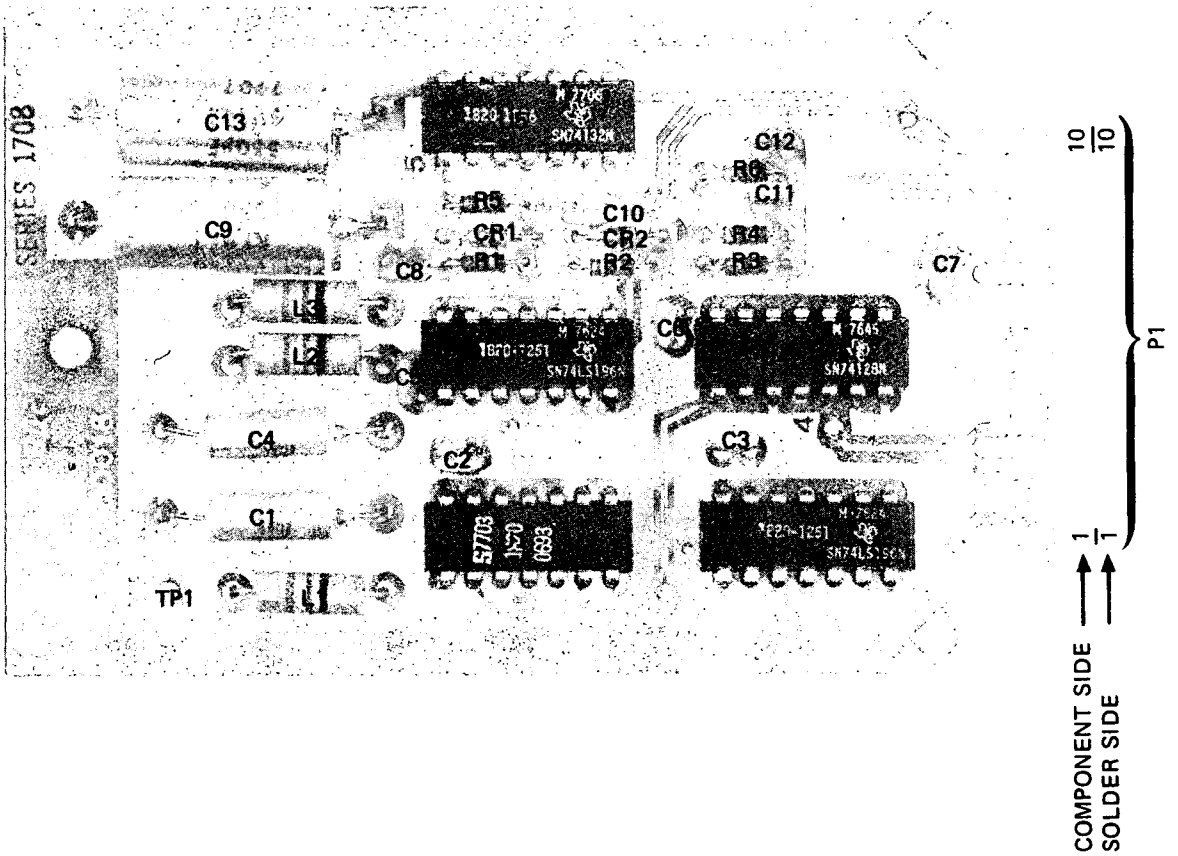

Part of Figure 8-42. A18 Time Base Buffer Assembly

Figure 8-42
A18 TIME BASE BUFFER ASSEMBLY

(See Page 8-185)

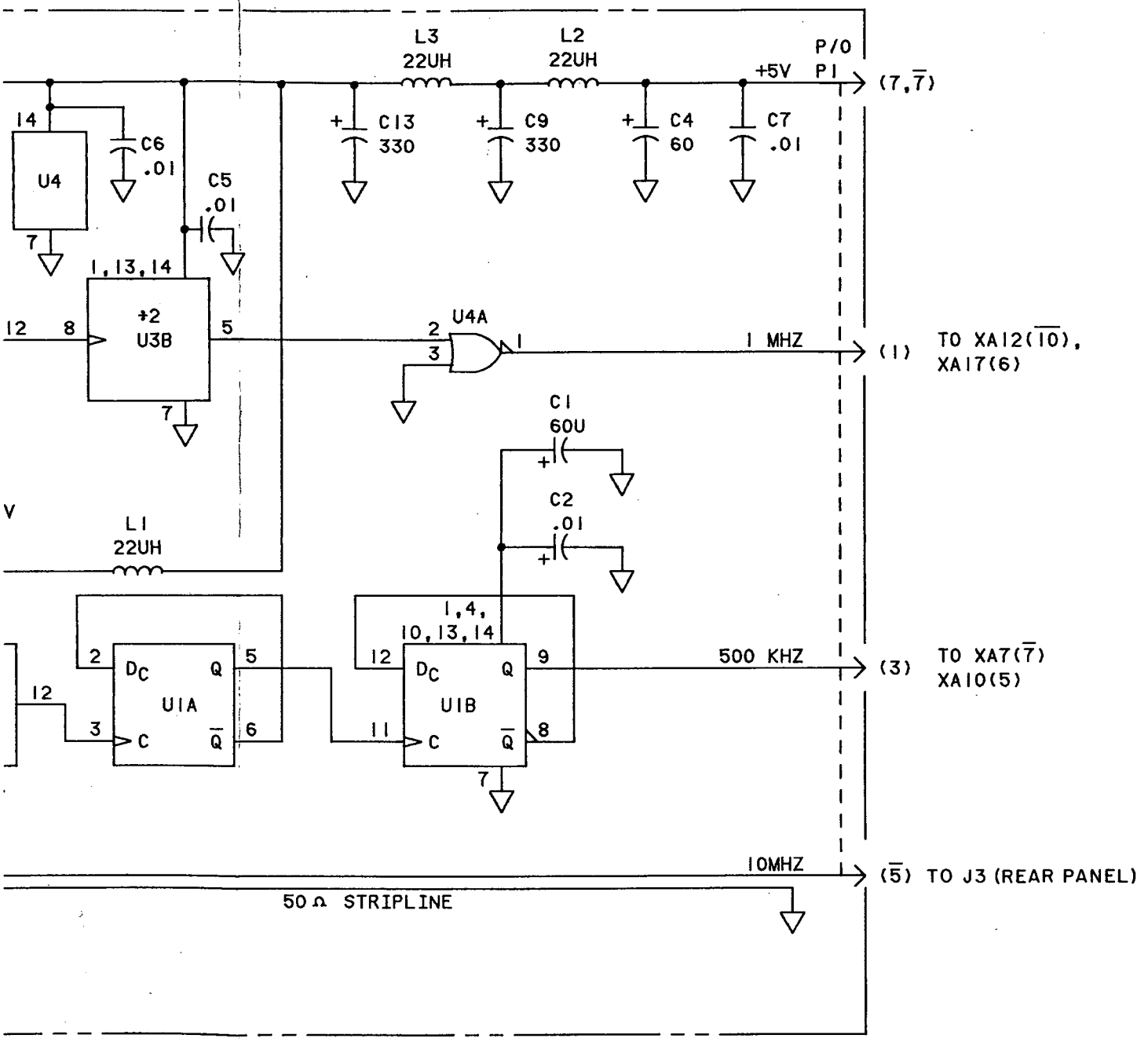

Figure 8-42. A18 Time Base Buffer Assembly

BASE BUFFER ASSEMBLY (05342-60018) SERIES 1720

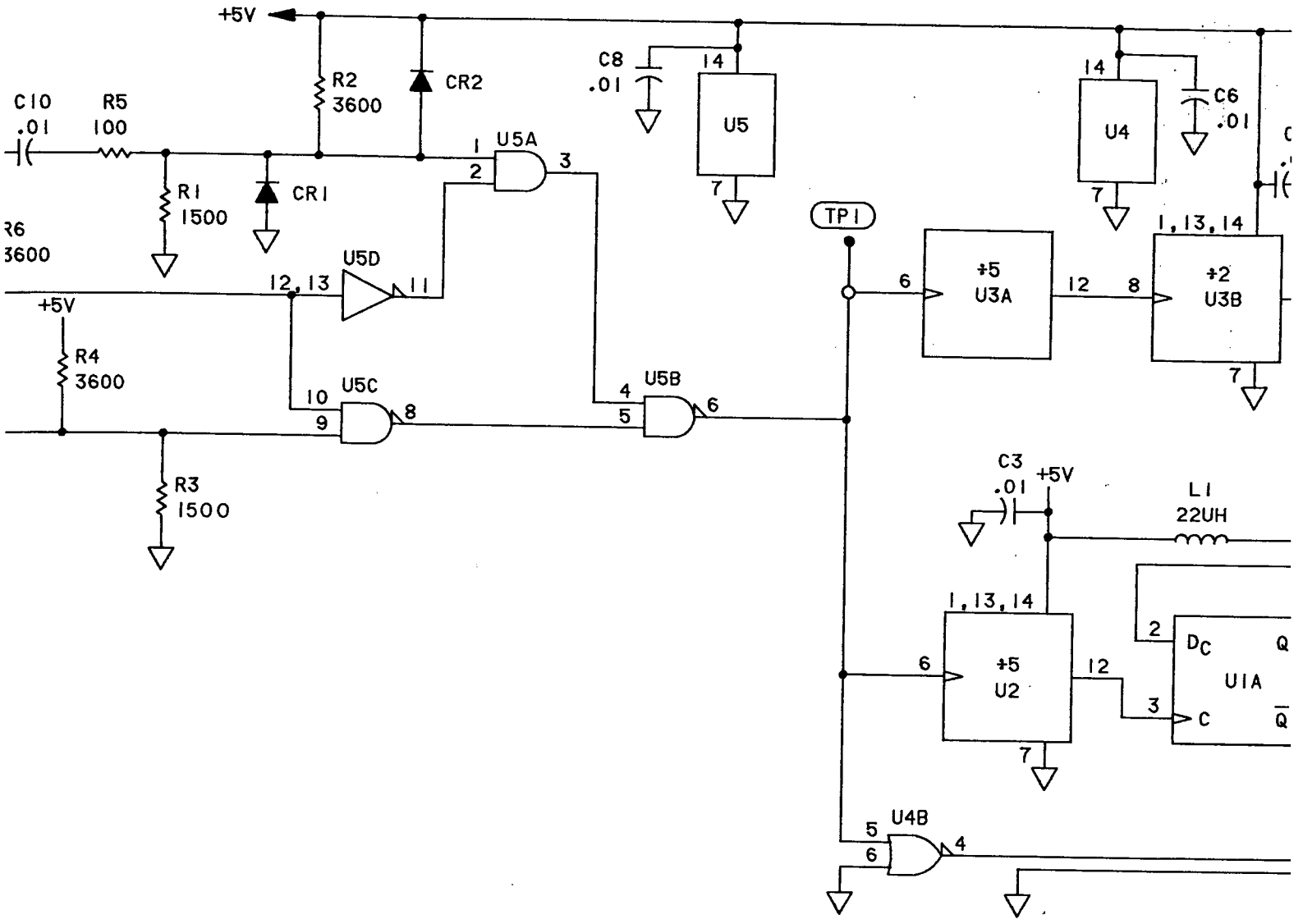

A18 TIME BASE BUFFER ASSEMBLY (05342-60018) SERIES 1720

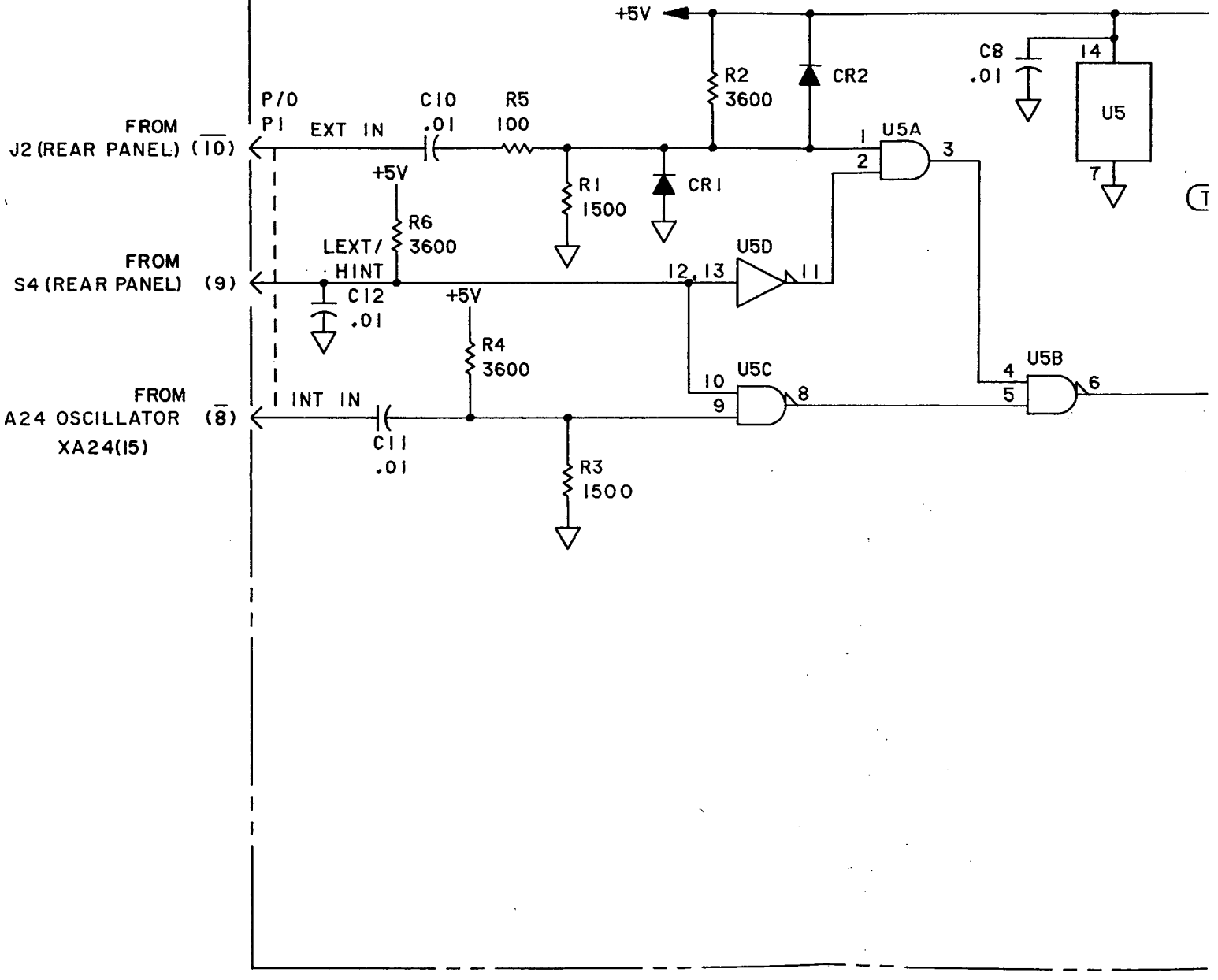

REFERENCE DESIGNATIONS

A18
C1-C13 CR1, CR2 L1-L3 R1-R6 TP1 U1-U5

TABLE OF ACTIVE ELEMENTS

REFERENCE DESIGNATION	HP PART NUMBER	MFR OR INDUSTRY PART NUMBER
CR1, CR2	1901-0040	Same
U1	1820-0693	74S74PC
U2, U3	1820-1251	SN74LS196N
U4	1820-1074	SN74128N
U5	1820-1056	SN74132N

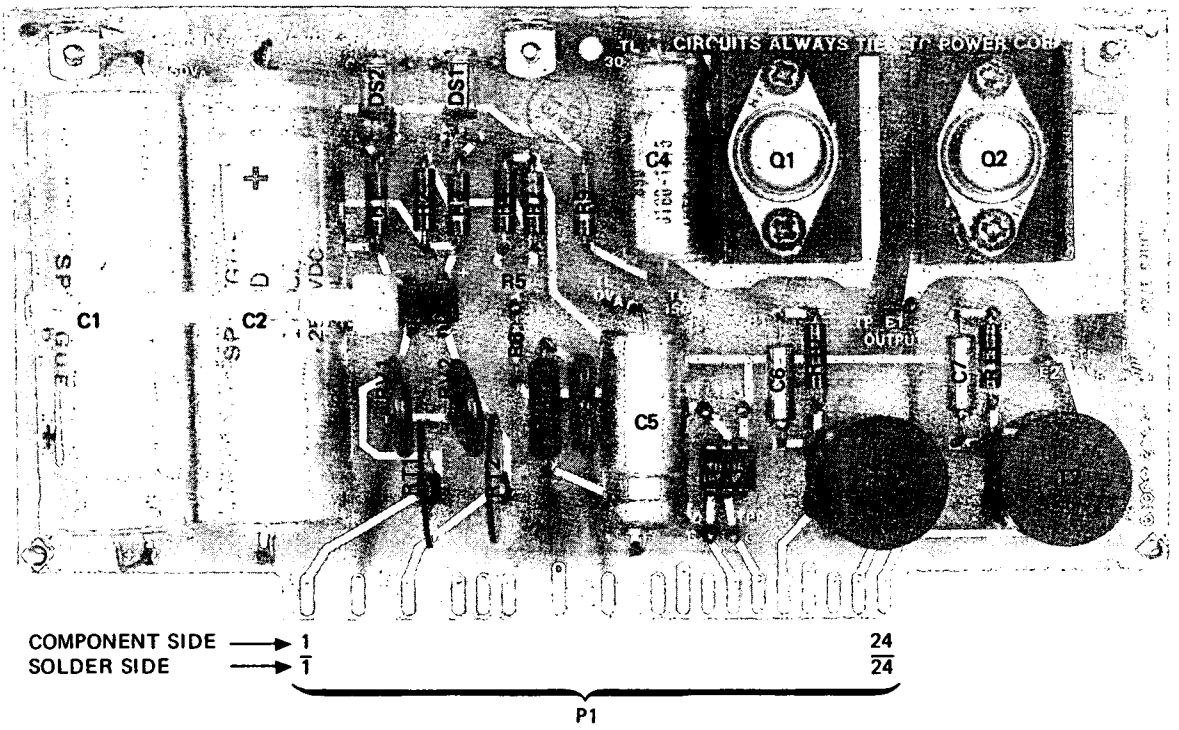

A19

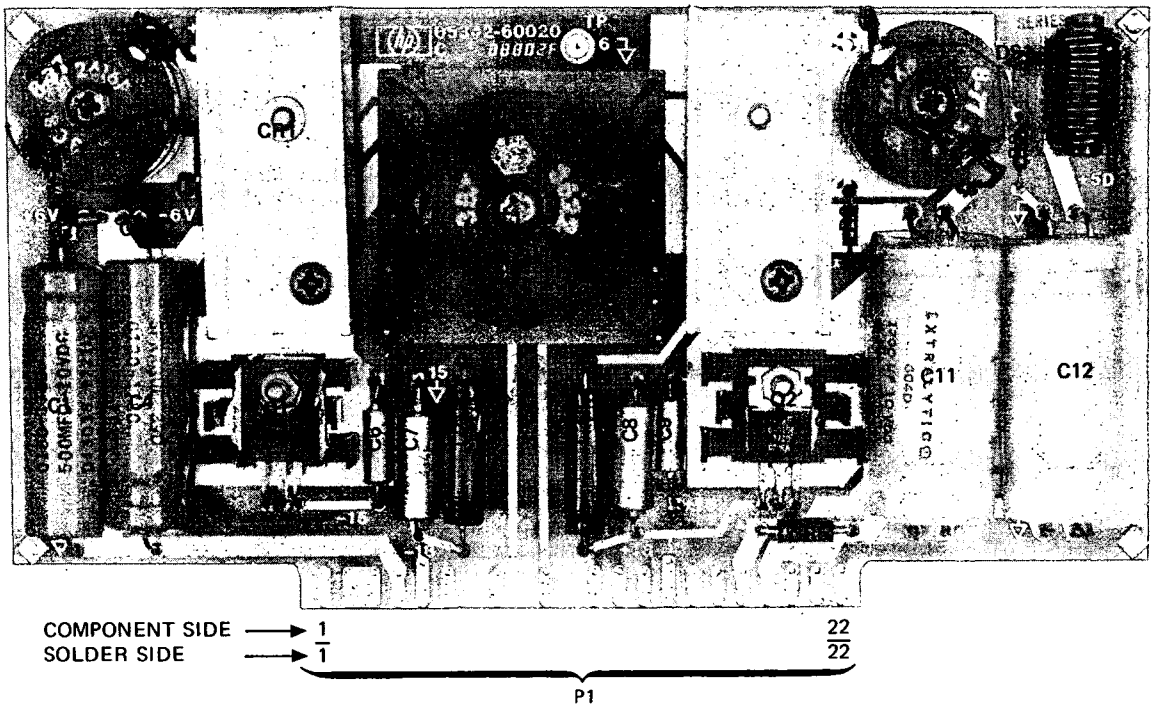

A20

Part of Figure 8-43. A19, A20, A21, and A23 Power Supply Assembly

Figure 8-43
A19, A20, A21, AND A23 POWER SUPPLY ASSEMBLIES

(See Page 8-187)

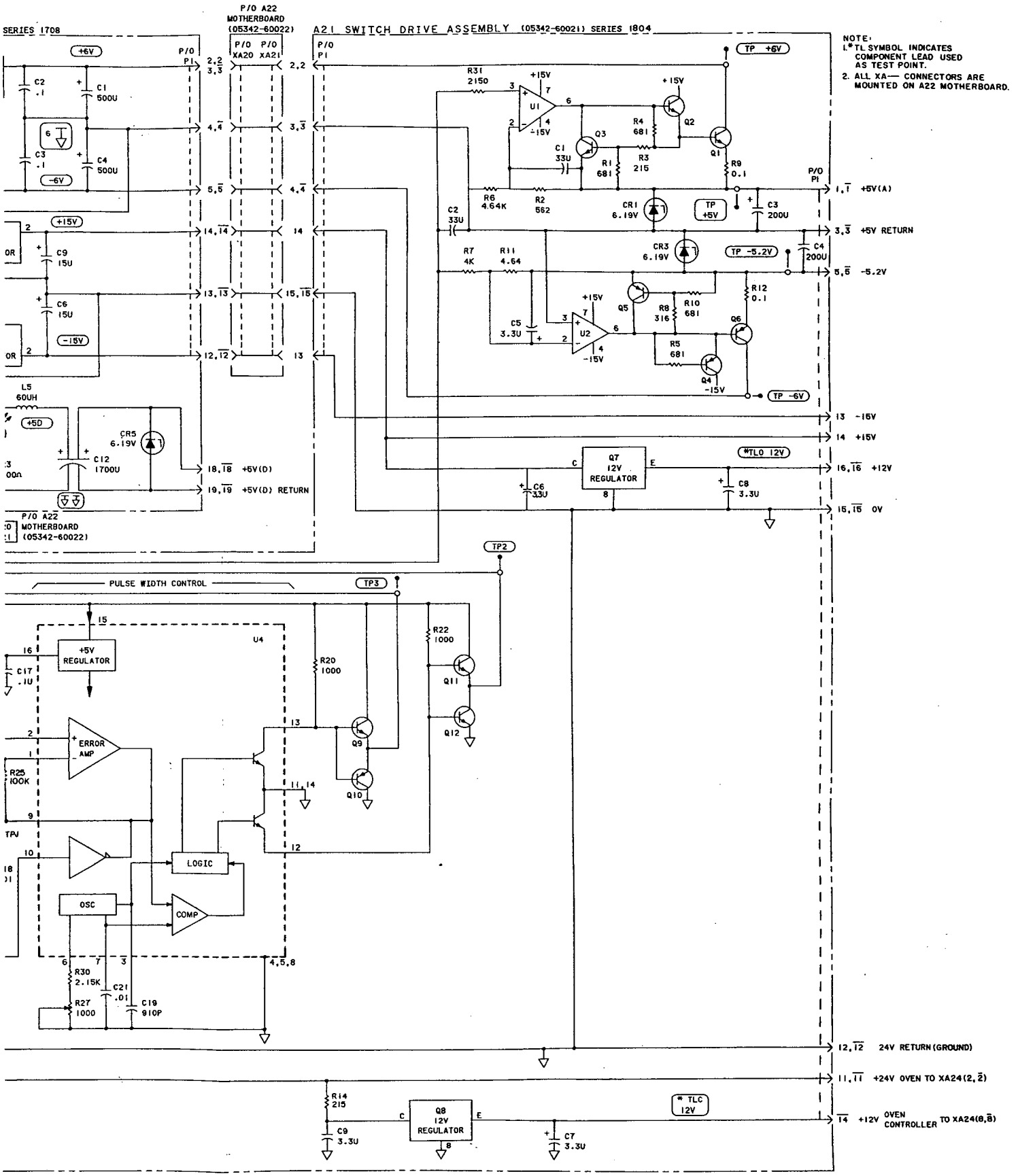

Figure 8-43. A19, A20, A21, and A23 Power Supply Assemblies

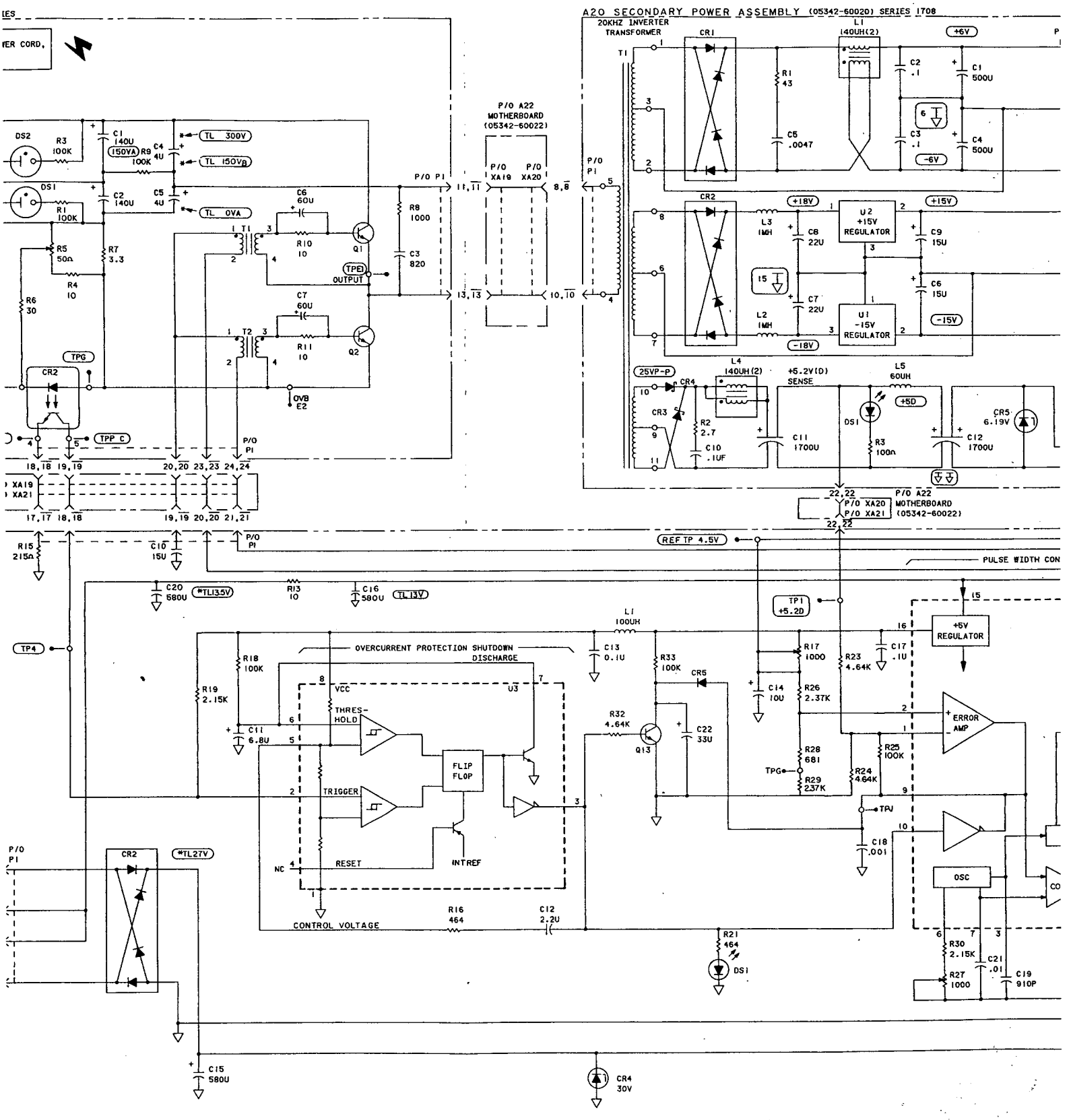
A20 SECONDARY POWER ASSEMBLY (05342-60020) SERIES 1708
20KHZ INVERTER TRANSFORMER
T1
CR1
L1 140UH(2)
+6V
-6V
C1 500U
C2 .1
C3 .1
C4 500U
C5 .0047
R1 43
P/O A22 MOTHERBOARD (05342-60022)
P/O XA19
P/O XA20
P/O P1
CR2
+18V
-18V
+15V
-15V
U2 +15V REGULATOR
U1 -15V REGULATOR
L3 1MH
L2 1MH
C8 22U
C7 22U
C9 15U
C6 15U
L4 140UH(2)
25VP-P
CR4
CR3
R2 2.7
C10 .1UF
C11 1700U
+5.2V(D) SENSE
L5 60UH
+5D
DS1
R3 100Ω
C12 1700U
CR5 6.19V
P/O A22 MOTHERBOARD (05342-60022)
P/O XA20
P/O XA21
REF TP 4.5V
PULSE WIDTH CON
DS2
R3 100K
C1 140U
150VA
R9 100K
C4 4U
TL 300V
TL 150VB
DS1
C2 140U
C5 4U
TL 0VA
R1 100K
R5 50Ω
R7 3.3
R4 10
R6 30
C6 60U
R10 10
Q1
T1
TP3 OUTPUT
C7 60U
R11 10
Q2
T2
0VB E2
TPG
CR2
TPP C
P/O P1
18,18 19,19 20,20 23,23 24,24
XA19
XA21
17,17 18,18 19,19 20,20 21,21
R8 1000
C3 820
11,11
13,13
8,8
10,10
R15 215Ω
C10 15U
C20 580U
*TL135V
R13 10
C16 580U
TL 13V
TP4
L1 100UH
C13 0.1U
R33 100K
CR5
R32 4.64K
Q13
C22 33U
TP1 +5.2D
R17 1000
R26 2.37K
R28 681
R29 237K
TPG
R23 4.64K
C17 .1U
+5V REGULATOR
C14 10U
ERROR AMP
R25 100K
R24 4.64K
TP9
C18 .001
OSC
OVERCURRENT PROTECTION SHUTDOWN
DISCHARGE
R18 100K
R19 2.15K
C11 6.8U
VCC
U3
THRES-HOLD
TRIGGER
FLIP FLOP
RESET
INTREF
NC
CONTROL VOLTAGE
R16 464
C12 2.2U
R21 464
DS1
R30 2.15K
R27 1000
C21 .01
C19 910P
P/O P1
CR2
*TL27V
C15 580U
CR4 30V

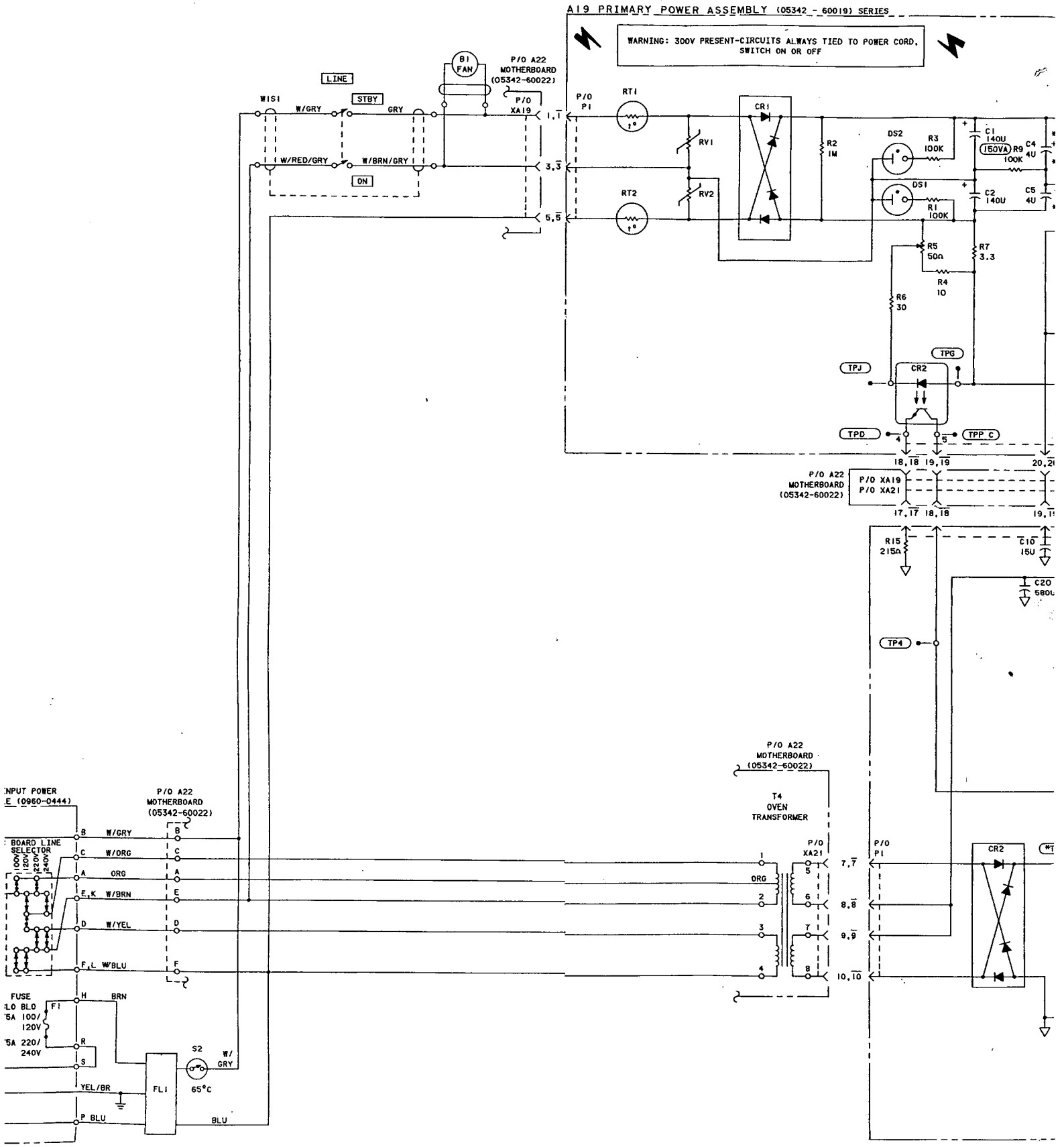
A19 PRIMARY POWER ASSEMBLY (05342 - 60019) SERIES
WARNING: 300V PRESENT-CIRCUITS ALWAYS TIED TO POWER CORD, SWITCH ON OR OFF
B1 FAN
P/O A22 MOTHERBOARD (05342-60022)
LINE
STBY
ON
W1S1
W/GRY
GRY
W/RED/GRY
W/BRN/GRY
P/O XA19
P/O P1
RT1
RT2
RV1
RV2
CR1
R2 1M
DS2
DS1
R3 100K
R1 100K
C1 140U
C2 140U
150VA
R9 100K
C4 4U
C5 4U
R5 50Ω
R4 10
R7 3.3
R6 30
TPG
TPJ
CR2
TPD
TPP C
P/O A22 MOTHERBOARD (05342-60022)
P/O XA19
P/O XA21
R15 215Ω
C10 15U
C20 680U
TP4
T4 OVEN TRANSFORMER
P/O A22 MOTHERBOARD (05342-60022)
P/O XA21
P/O P1
CR2
INPUT POWER
E (0960-0444)
P/O A22 MOTHERBOARD (05342-60022)
BOARD LINE SELECTOR
100V
120V
220V
240V
W/GRY
W/ORG
ORG
W/BRN
W/YEL
W/BLU
FUSE
LO BLO
5A 100/120V
5A 220/240V
F1
BRN
S2
W/GRY
65°C
FL1
YEL/BR
P BLU
BLU

REFERENCE DESIGNATIONS

A19
C1-C7
CR1, CR2
DS1, DS2
Q1, Q2
R1-R11
RT1, RT2
RV1, RV2
T1, T2
TP1-TP6

TABLE OF ACTIVE ELEMENTS

REFERENCE DESIGNATION	HP PART NUMBER	MFR OR INDUSTRY PART NUMBER
CR1	1906-0069	Same
CR2	1990-0543	Same
DS1, DS2	2140-0018	A9A-C

REFERENCE DESIGNATIONS

A20
C1-C12
CR1-CR5
DS1
L1-L5
R1-R3
T1
U1, U2

TABLE OF ACTIVE ELEMENTS

REFERENCE DESIGNATION	HP PART NUMBER	MFR OR INDUSTRY PART NUMBER
CR1	1906-0079	Same
CR2	1906-0051	Same
CR3, CR4	1901-0784	Same
CR5	1902-0522	IN5340B
DS1	1990-0485	Same
U1	1826-0214	MC7915CT
U2	1826-0106	7815UC

REFERENCE DESIGNATIONS

A21
C1-C22
CR1-CR5
DS1
L1
Q1-Q13
R1-R33
TP1-TP8
U1-U4

TABLE OF ACTIVE ELEMENTS

REFERENCE DESIGNATION	HP PART NUMBER	MFR OR INDUSTRY PART NUMBER
CR1, CR3	1902-0522	IN5340B
CR2	1906-0096	MDA202
CR4	1902-0644	Same
CR5	1901-0040	Same
DS1	1990-0486	Same
Q1	1854-0635	D44H5
Q2	1854-0634	MPS-U01
Q3	1854-0215	SPS3611
Q4	1853-0326	Same
Q5	1853-0036	Same
Q6	1853-0363	D45H5
Q7, Q8	1826-0275	78L12AC
Q9, Q11	1854-0246	2N3643
Q10, Q12	1853-0058	S32248
Q13	1854-0215	SPS3611
U1, U2	1820-0493	LM307N
U3	1826-0180	NE555V
U4	1826-0428	SG3524

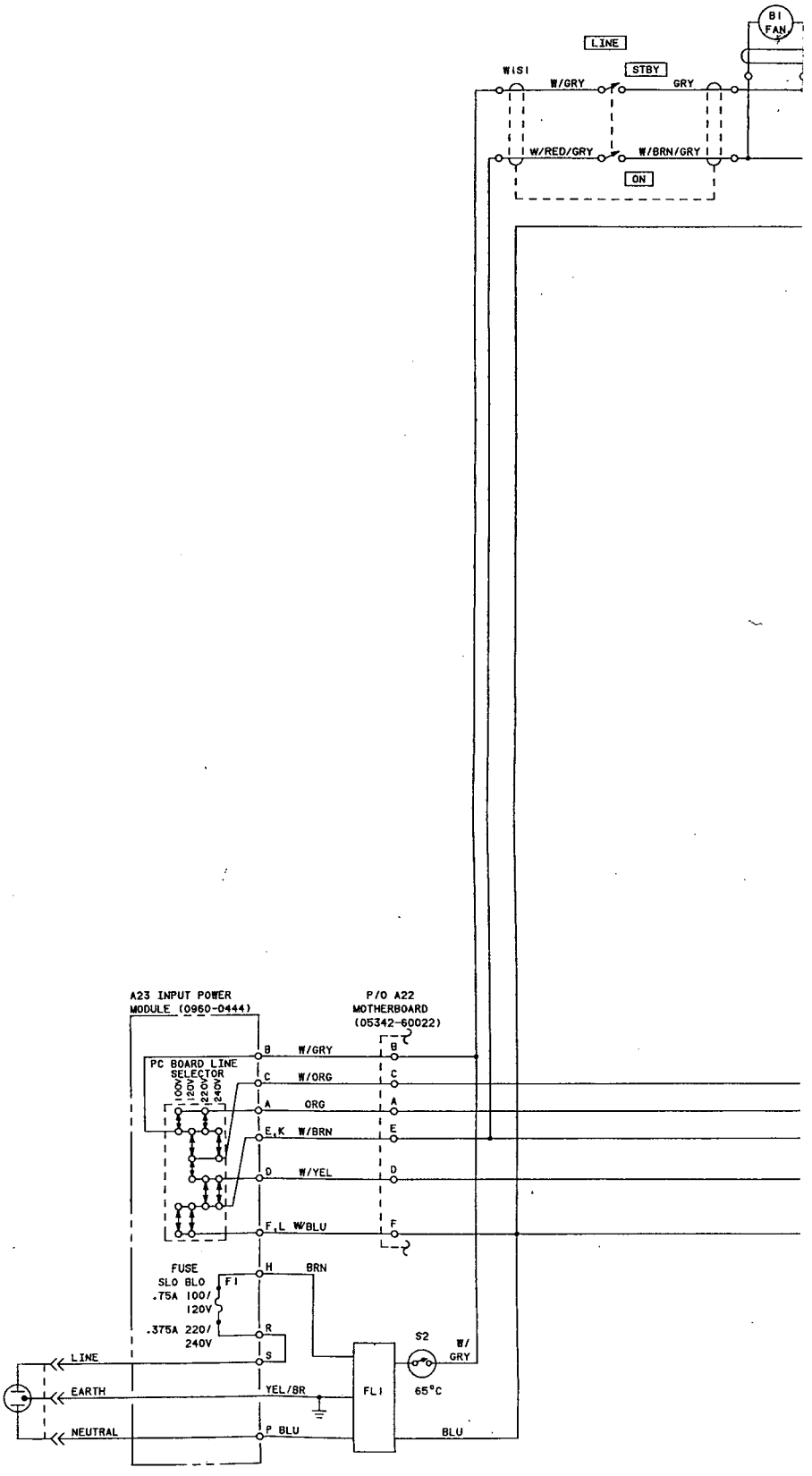

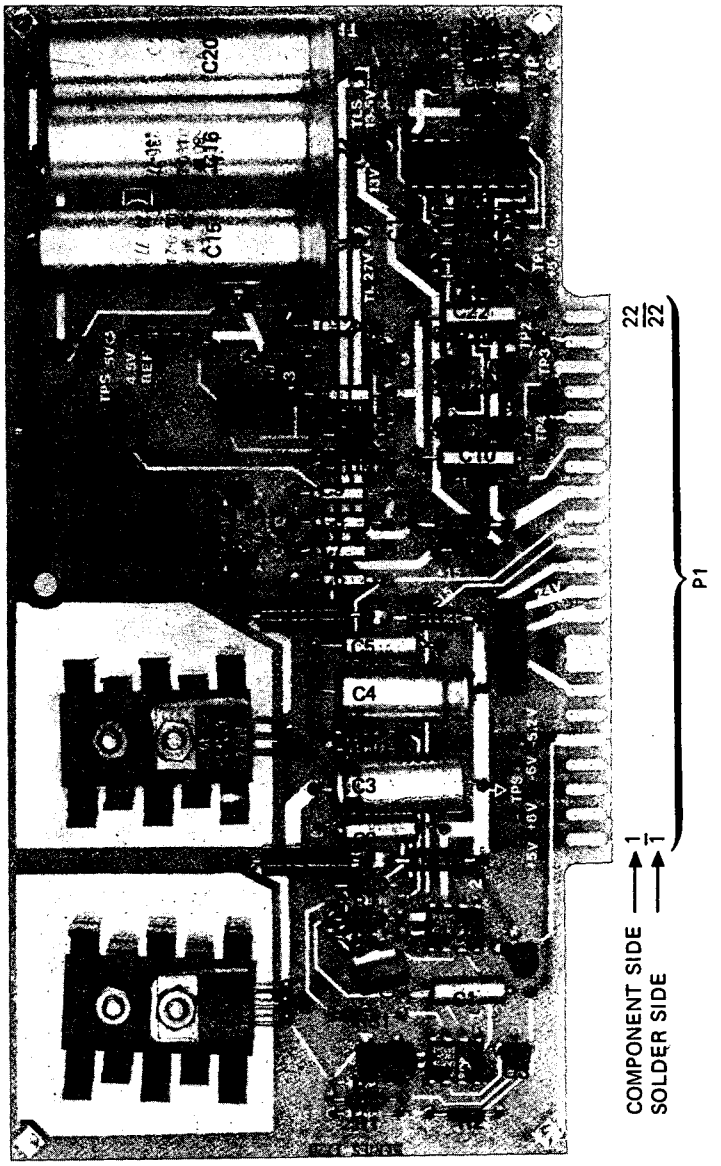

A21

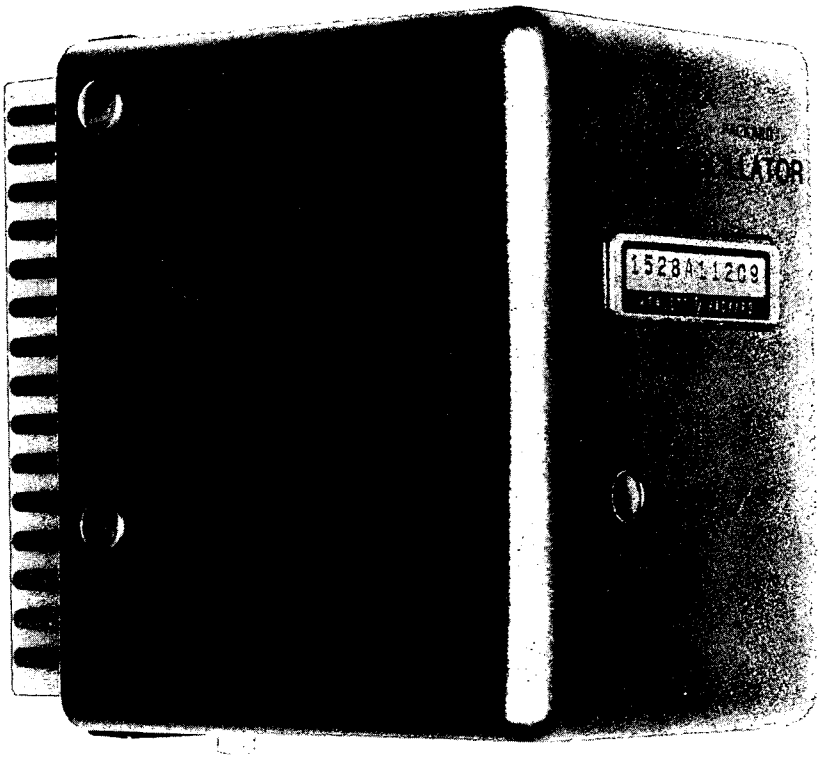

A24 OPTION 001

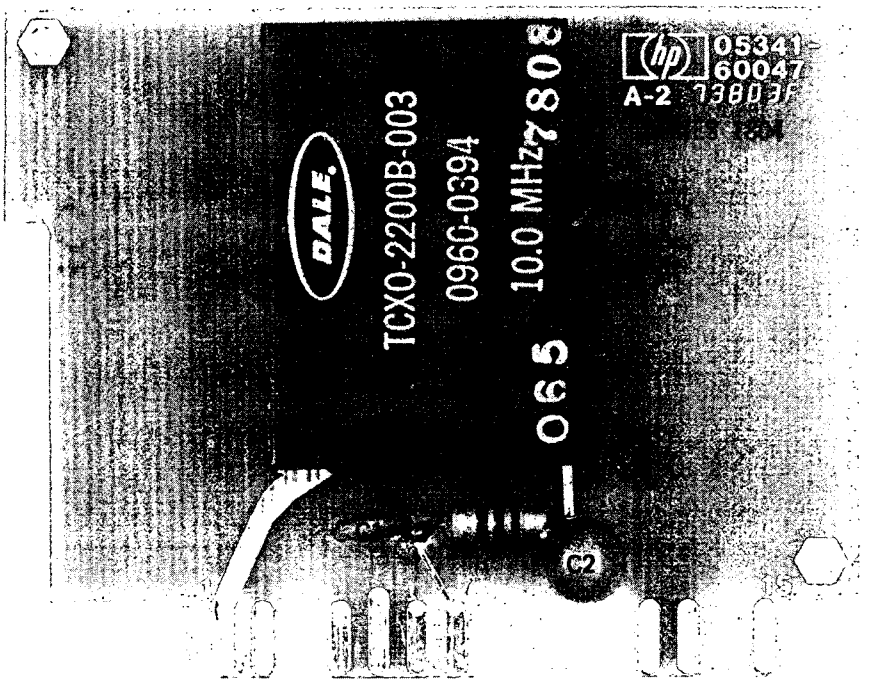

A24 STANDARD

Part of Figure 8-44. A24 Oscillator Assemblies

Figure 8-44
A24 OSCILLATOR ASSEMBLY

(See Page 8-189)

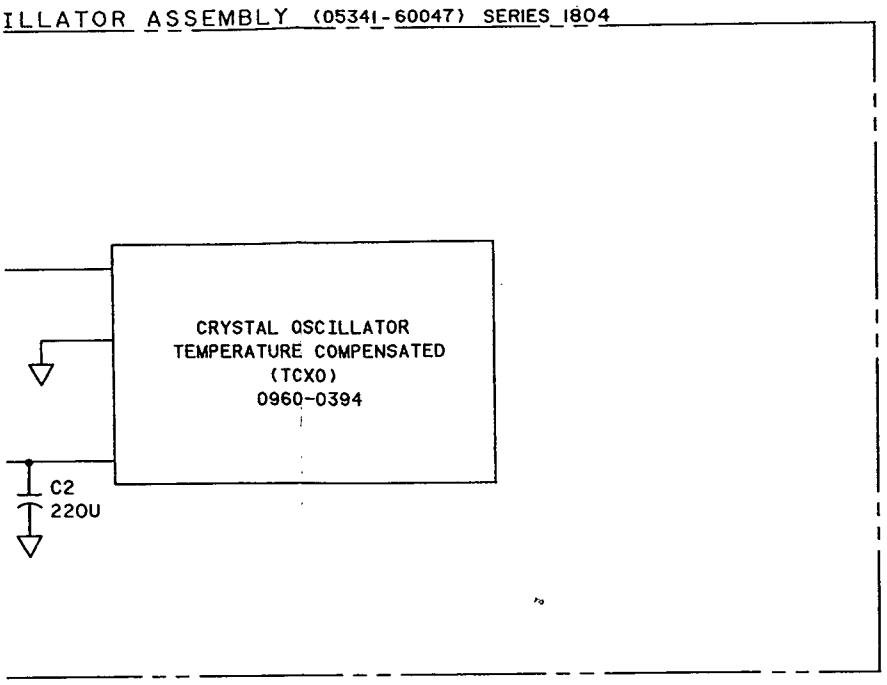

NOTES:

1. REFERENCE DESIGNATIONS WITHIN THIS ASSEMBLY ARE ABBREVIATED. ADD ASSEMBLY NUMBER TO ABBREVIATION FOR COMPLETE DESCRIPTION.

2. UNLESS OTHERWISE INDICATED:
   RESISTANCE IN OHMS;
   CAPACITANCE IN FARADS;
   INDUCTANCE IN HENRIES

3. THE FOLLOWING ASSEMBLIES ARE NOT FIELD REPAIRABLE
   a. CRYSTAL OSCILLATOR 0960-0394
   b. A24 OPTION 001 10MHZ OSCILLATOR 10544-60011

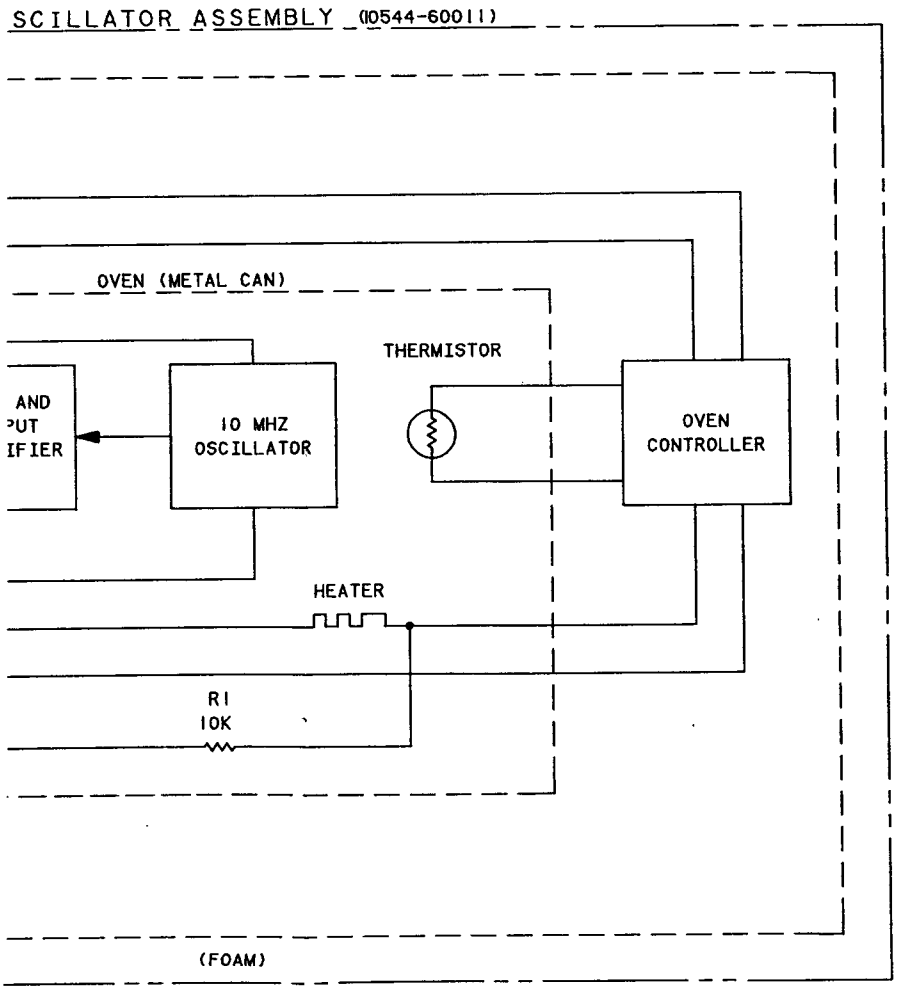

Figure 8-44. A24 Oscillator Assembly

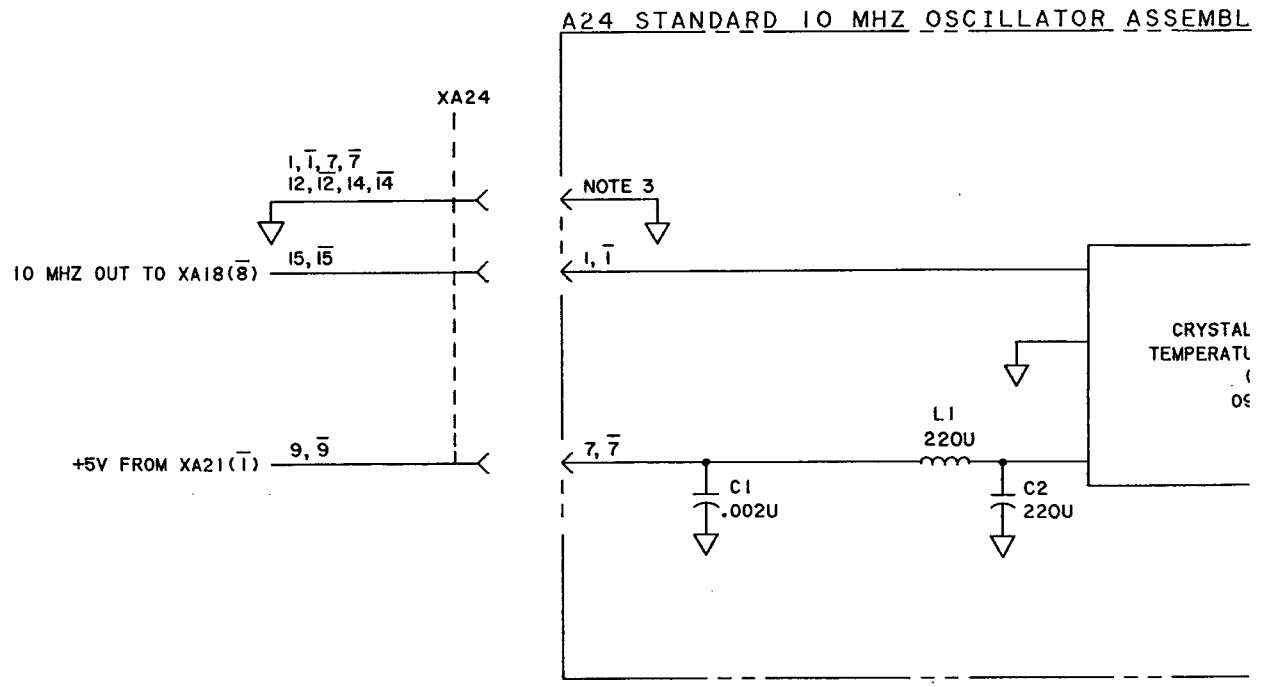
A24 STANDARD 10 MHZ OSCILLATOR ASSEMBL
XA24
1, 1, 7, 7
12, 12, 14, 14
NOTE 3
10 MHZ OUT TO XA18(8)
15, 15
1, 1
CRYSTAL
TEMPERATU
L1
220U
+5V FROM XA21(1)
9, 9
7, 7
C1
.002U
C2
220U

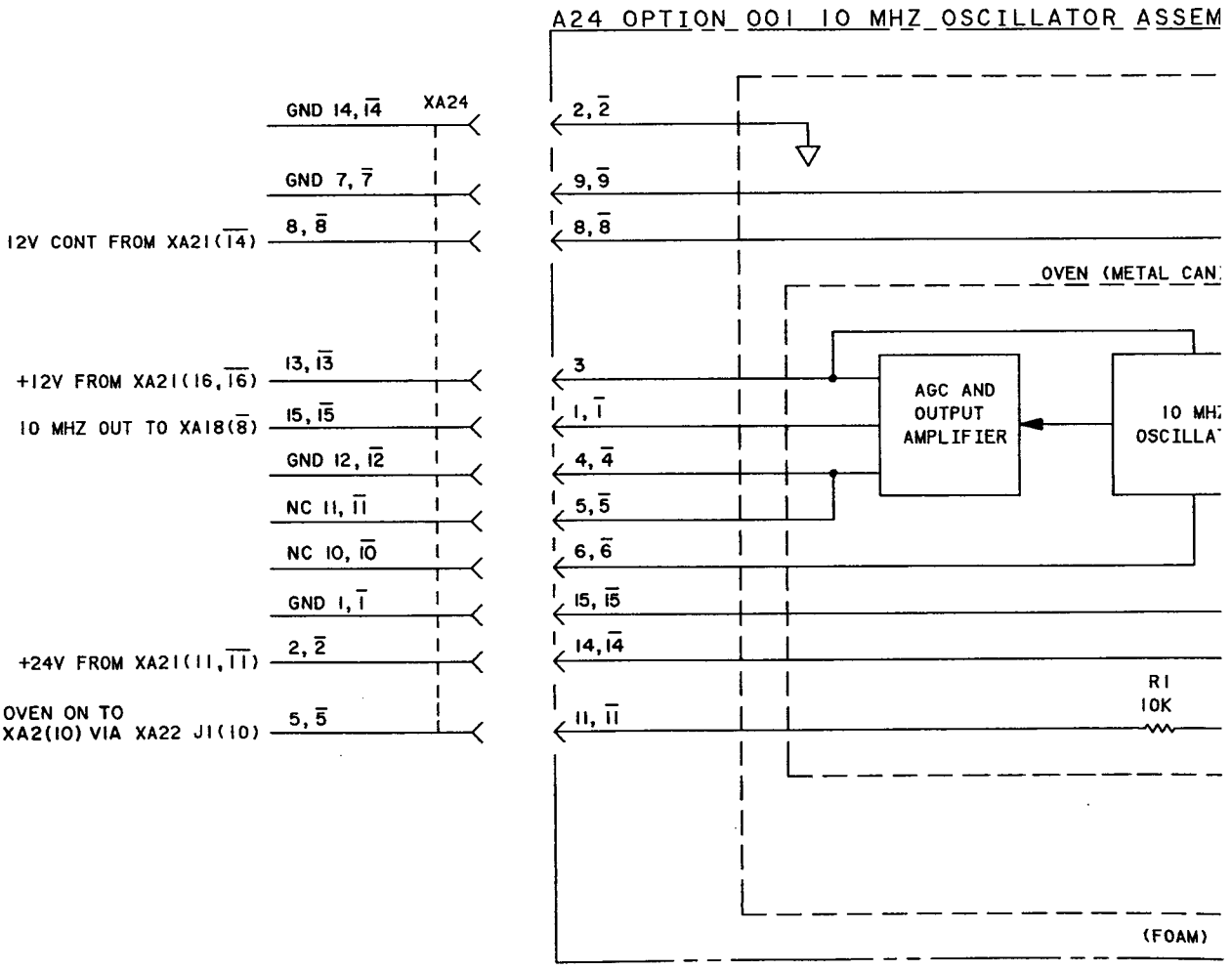
A24 OPTION 001 10 MHZ OSCILLATOR ASSEM
GND 14, 14
XA24
2, 2
GND 7, 7
9, 9
12V CONT FROM XA21(14)
8, 8
8, 8
OVEN (METAL CAN
+12V FROM XA21(16, 16)
13, 13
3
AGC AND
OUTPUT
AMPLIFIER
10 MH
OSCILLA
10 MHZ OUT TO XA18(8)
15, 15
1, 1
GND 12, 12
4, 4
NC 11, 11
5, 5
NC 10, 10
6, 6
GND 1, 1
15, 15
+24V FROM XA21(11, 11)
2, 2
14, 14
R1
10K
OVEN ON TO
XA2(10) VIA XA22 J1(10)
5, 5
11, 11
(FOAM)

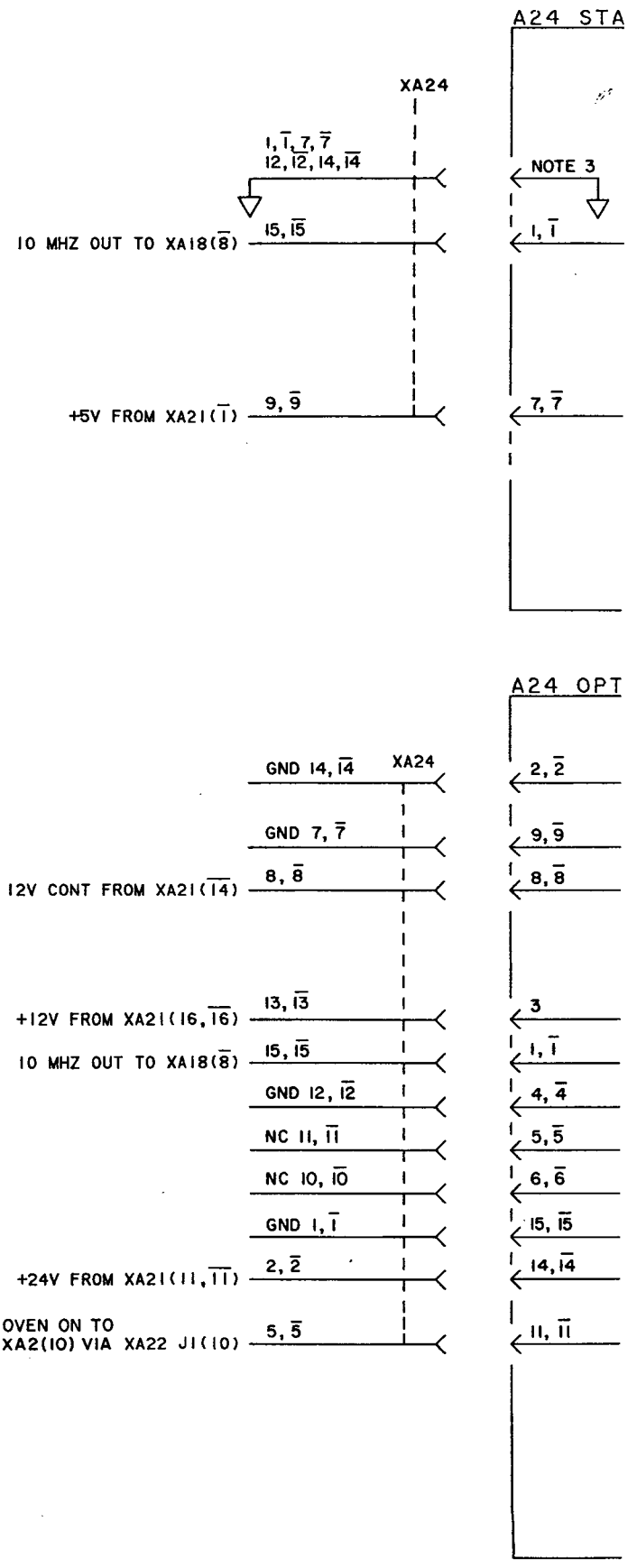
A24 STA
XA24
1, 1, 7, 7
12, 12, 14, 14
NOTE 3
10 MHZ OUT TO XA18(8)
15, 15
1, 1
+5V FROM XA21(1)
9, 9
7, 7
A24 OPT
GND 14, 14
XA24
2, 2
GND 7, 7
9, 9
12V CONT FROM XA21(14)
8, 8
8, 8
+12V FROM XA21(16, 16)
13, 13
3
10 MHZ OUT TO XA18(8)
15, 15
1, 1
GND 12, 12
4, 4
NC 11, 11
5, 5
NC 10, 10
6, 6
GND 1, 1
15, 15
+24V FROM XA21(11, 11)
2, 2
14, 14
OVEN ON TO
XA2(10) VIA XA22 J1(10)
5, 5
11, 11

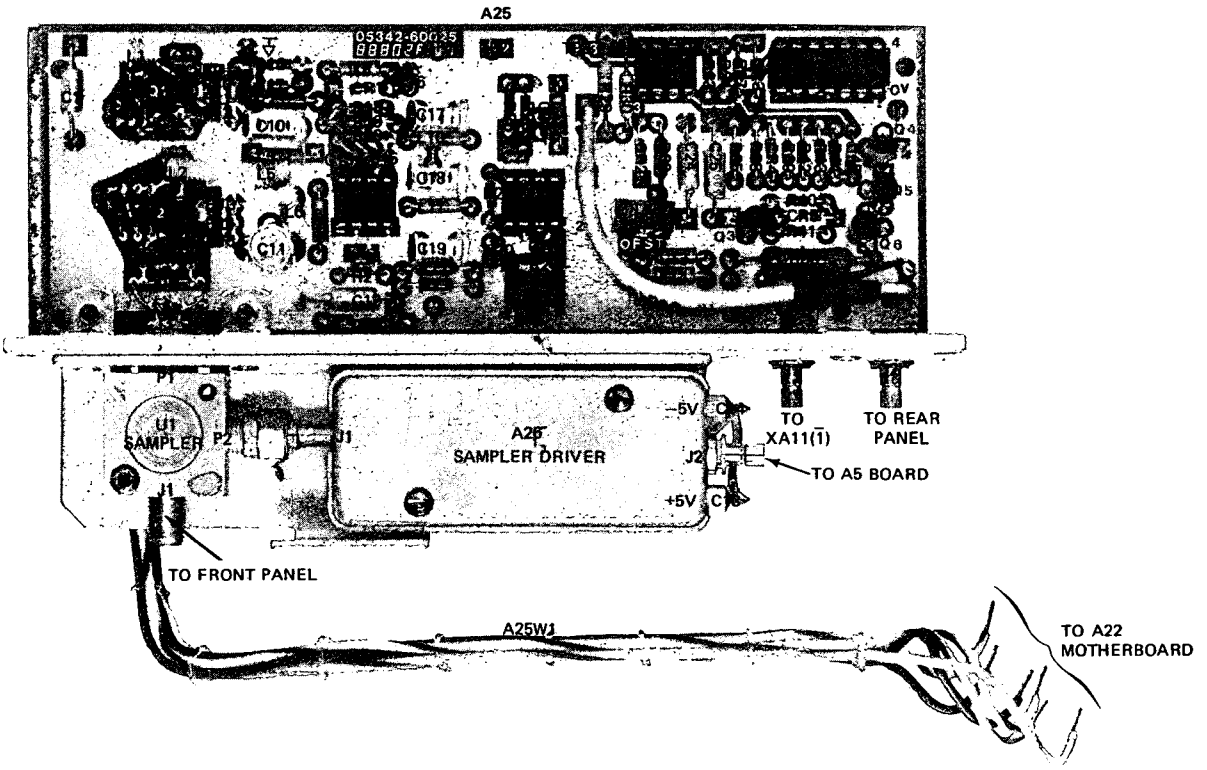

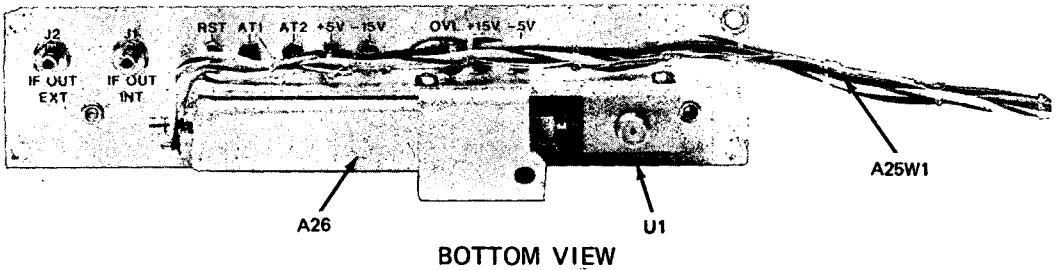

BOTTOM VIEW

Part of Figure 8-45. A25 Preamplifier Assembly

Figure 8-45
A25 PREAMPLIFIER ASSEMBLY

(See Page 8-191)

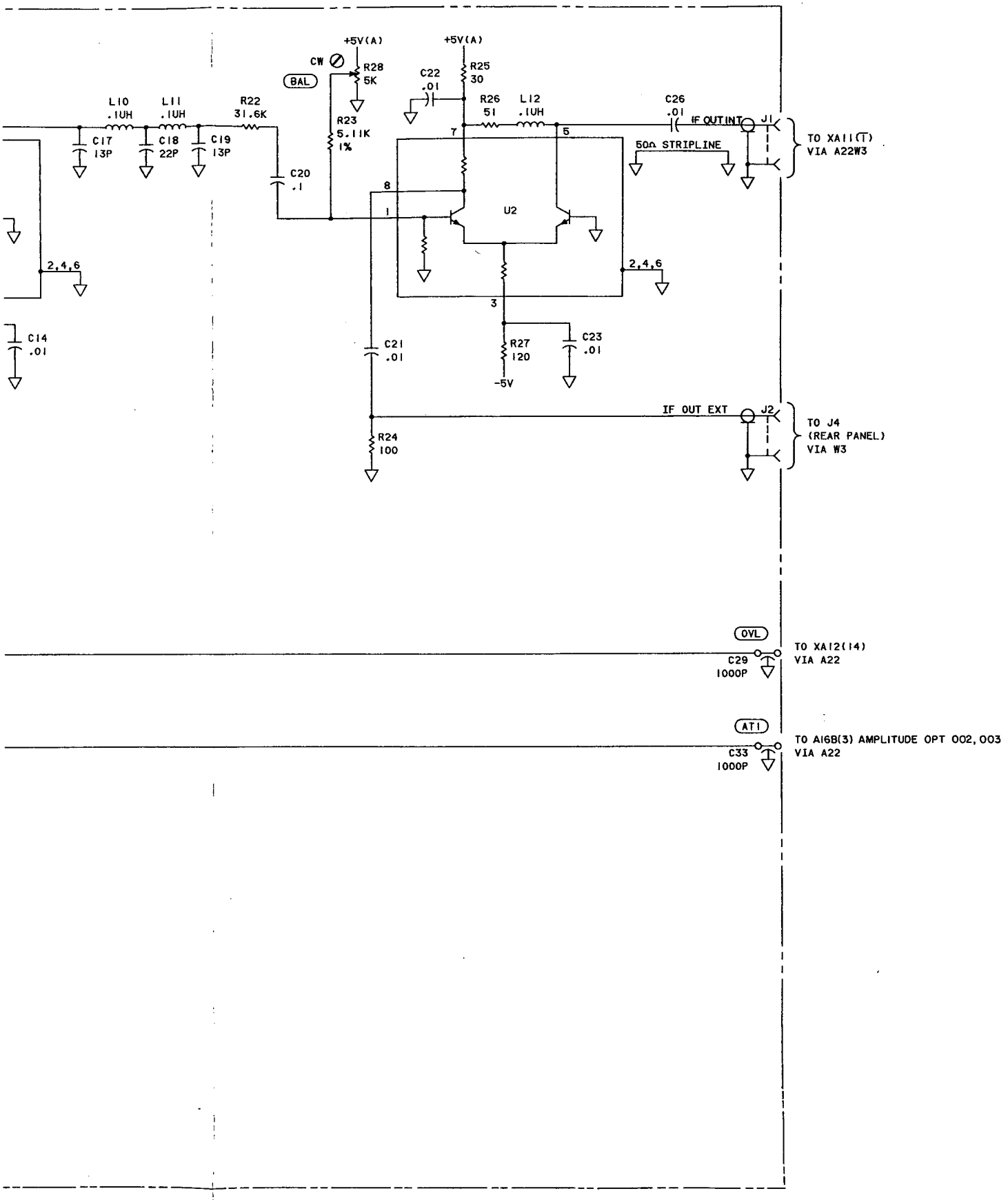

Figure 8-45. A25 Preamplifier Assembly

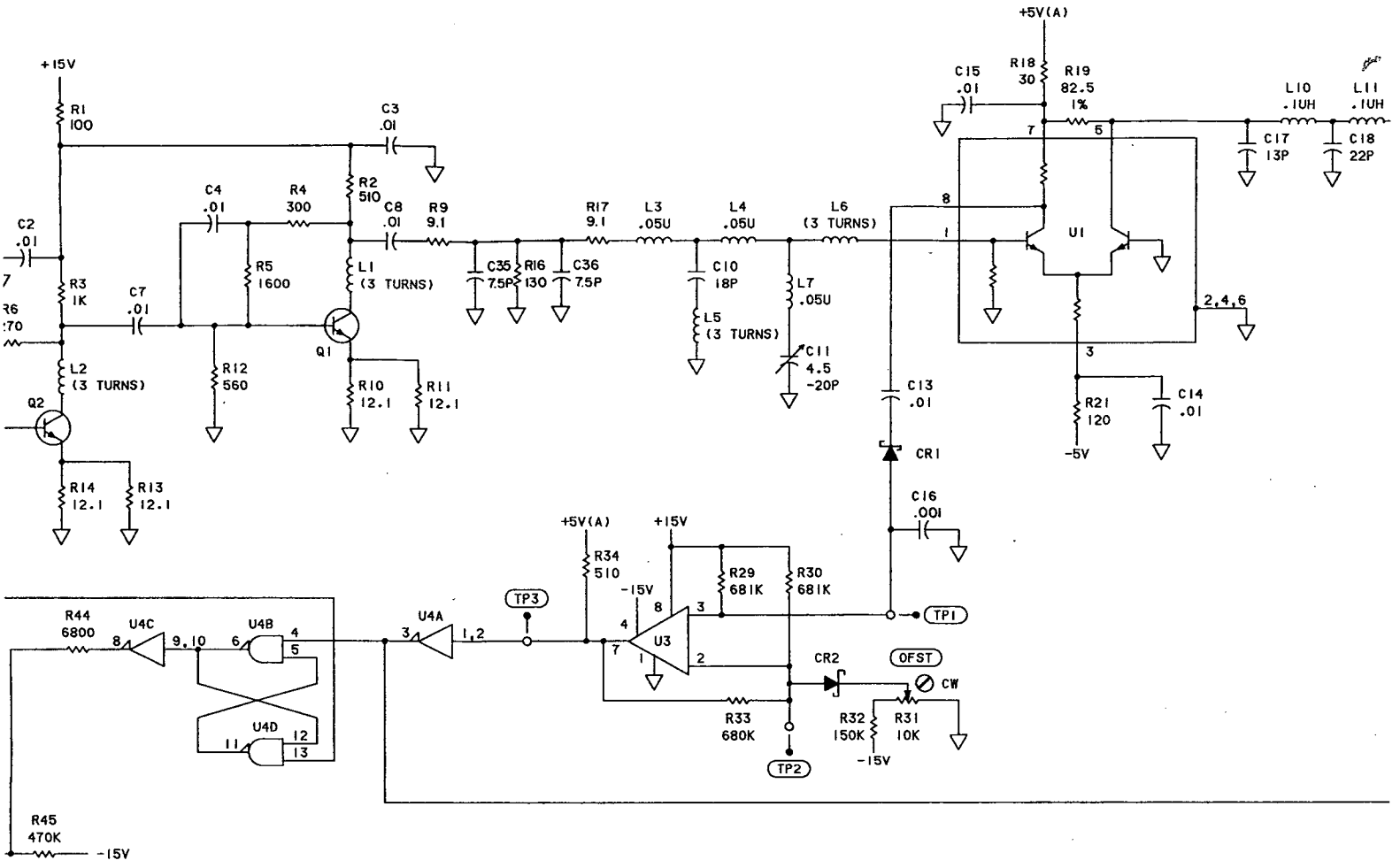
+15V
R1 100
C3 .01
R2 510
C4 .01
R4 300
C2 .01
C8 .01
R9 9.1
R17 9.1
L3 .05U
L4 .05U
L6 (3 TURNS)
R3 1K
C7 .01
R5 1600
L1 (3 TURNS)
C35 7.5P
R16 130
C36 7.5P
C10 18P
L5 (3 TURNS)
L7 .05U
C11 4.5 -20P
Q1
L2 (3 TURNS)
R12 560
R10 12.1
R11 12.1
Q2
R14 12.1
R13 12.1
+5V(A)
C15 .01
R18 30
R19 82.5 1%
L10 .1UH
L11 .1UH
C17 13P
C18 22P
U1
2,4,6
R21 120
C14 .01
-5V
C13 .01
CR1
C16 .001
+5V(A)
+15V
R34 510
R29 681K
R30 681K
-15V
TP3
TP1
R44 6800
U4C
U4B
U4A
1,2
U3
CR2
OFST
CW
U4D
R33 680K
R32 150K
R31 10K
TP2
-15V
R45 470K
-15V

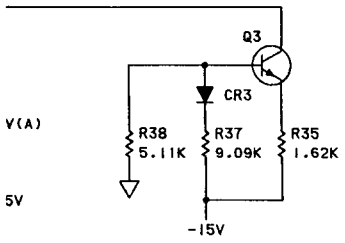
Q3
CR3
R38 5.11K
R37 9.09K
R35 1.62K
-15V

A25 PREAMPLIFIER ASSEMBLY (05342-60025) SERIES 1804

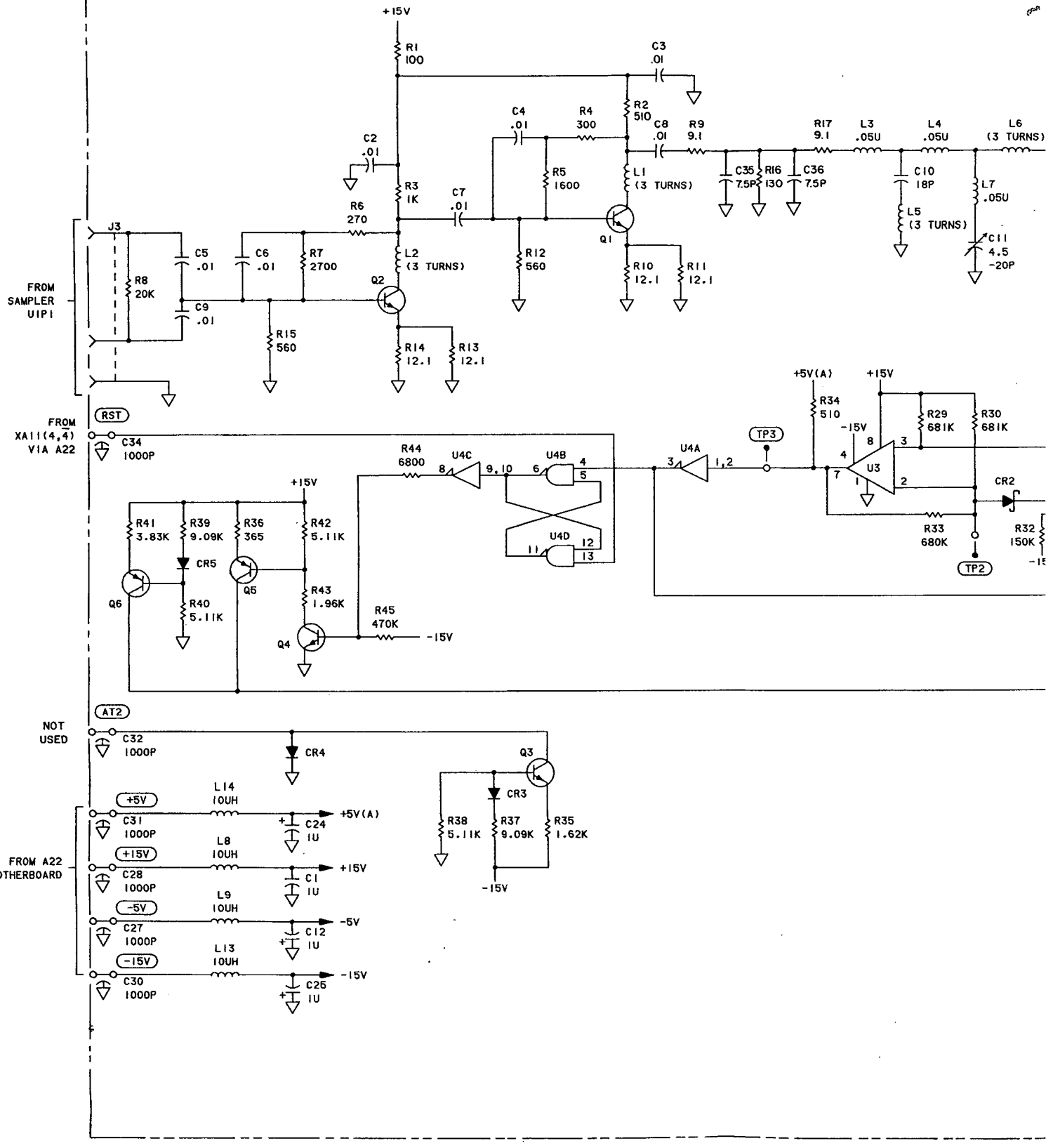

REFERENCE DESIGNATIONS

A25
C1-C34
CR1-CR5
L1-L14
Q1-Q6
R1-R45
TP1-TP4
U1-U4
W1-W3

TABLE OF ACTIVE ELEMENTS

REFERENCE DESIGNATION	HP PART NUMBER	MFR OR INDUSTRY PART NUMBER
CR1, CR2	1901-0535	Same
CR3-CR5	1901-0040	Same
Q1, Q2	1854-0591	8FR-90
Q3, Q4	1854-0071	Same
Q5	1853-0058	S32248
Q6	1853-0020	Same
U1, U2	1826-0372	Same
U3	1826-0065	LM311N
U4	1820-0054	7400PC

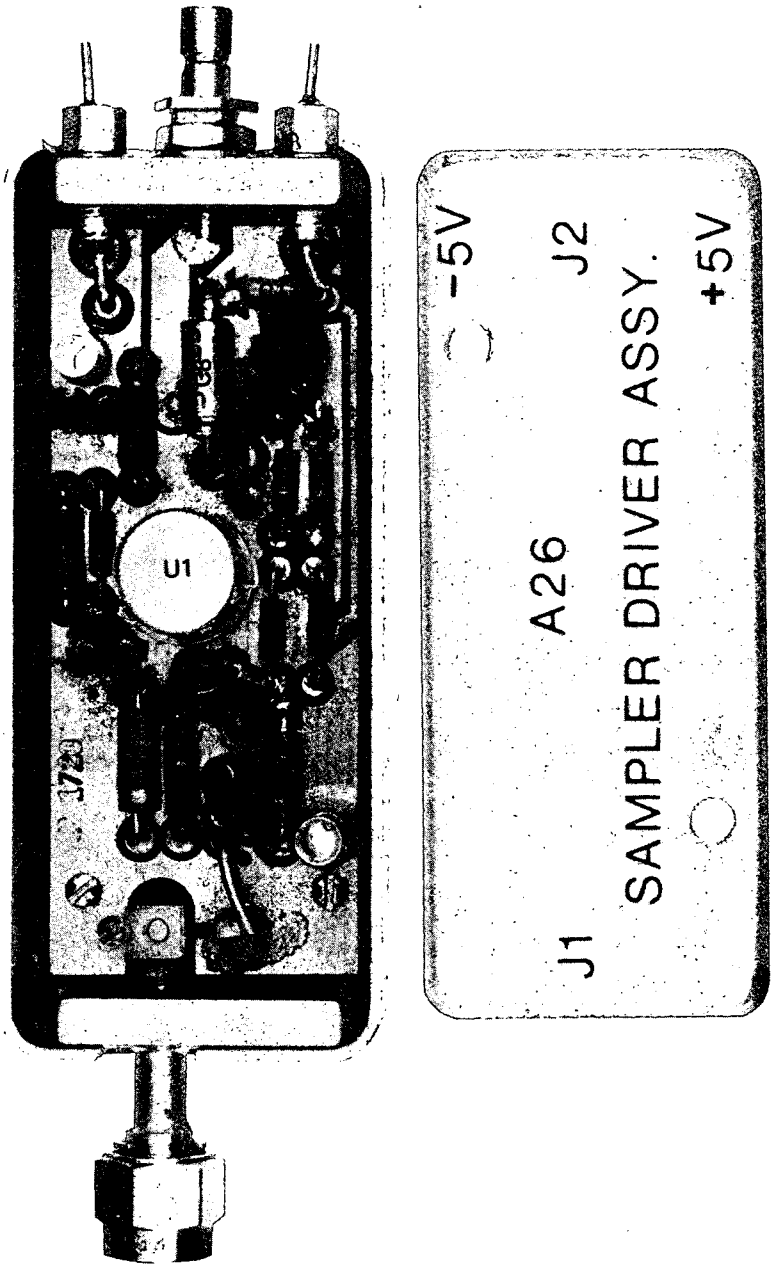

Part of Figure 8-46. A26 Sampler Driver Assembly

Figure 8-46
A26 SAMPLER DRIVER ASSEMBLY

(See Page 8-193)

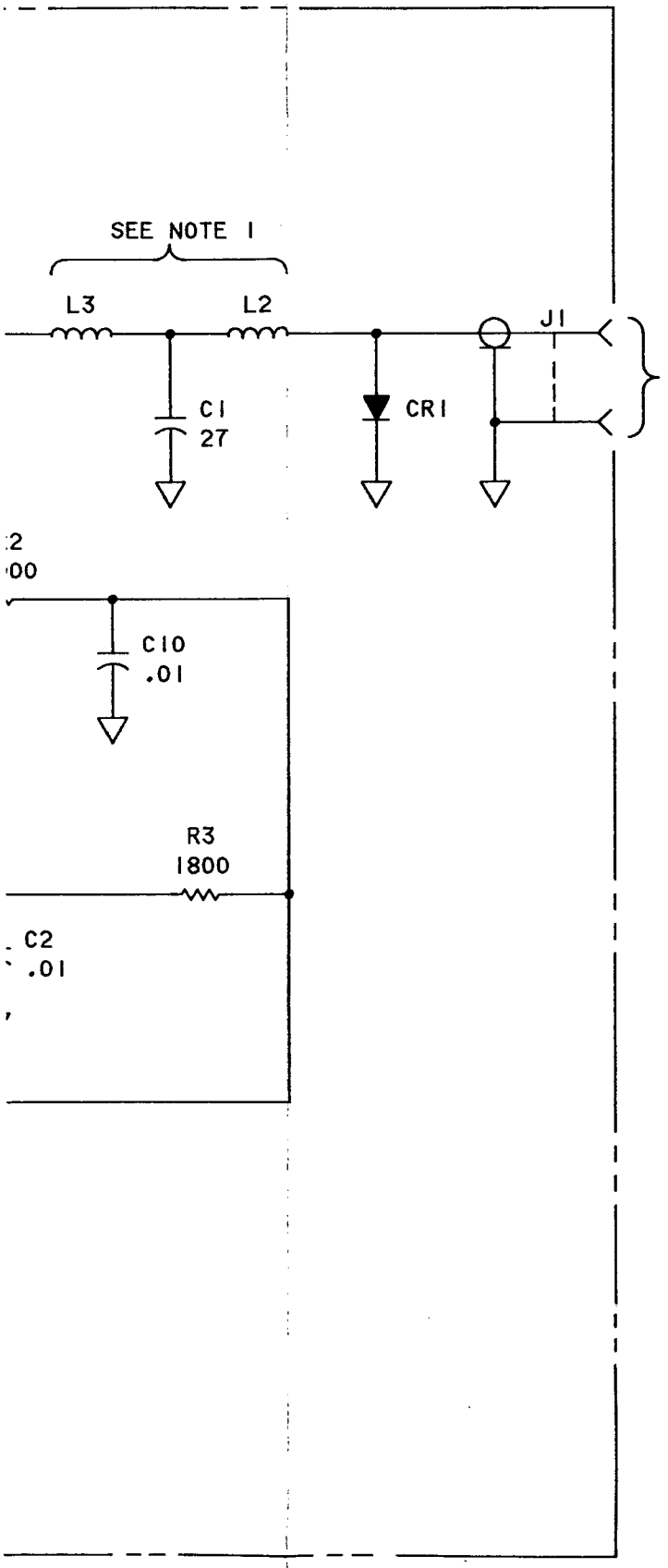

NOTES:

1. INDUCTOR L2 IS FORMED BY A DIODE CLIP, HP PART NO. 05342-20106. L3 IS A WIRE LINK.

2. CAPACITOR C12 IS MOUNTED ON BACK OF BOARD.

Figure 8-46. A26 Sampler Driver Assembly

\26 SAMPLER DRIVER ASSEMBLY (05342-60026) SERIES 1708

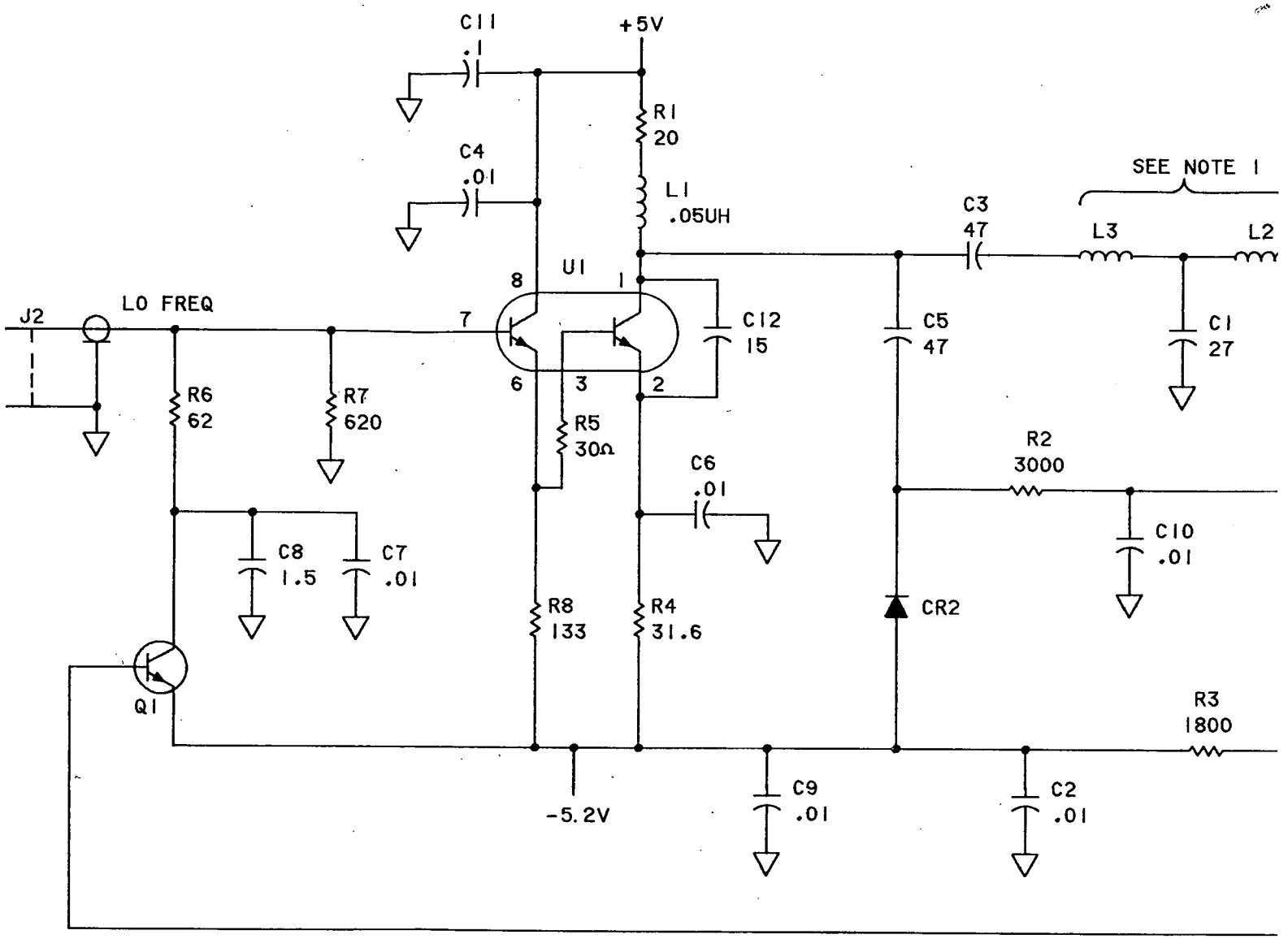

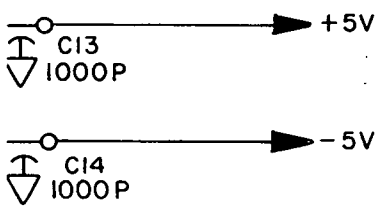

A26 SAMPLER DRIVER ASSEMBLY (05342-60026) SERIES

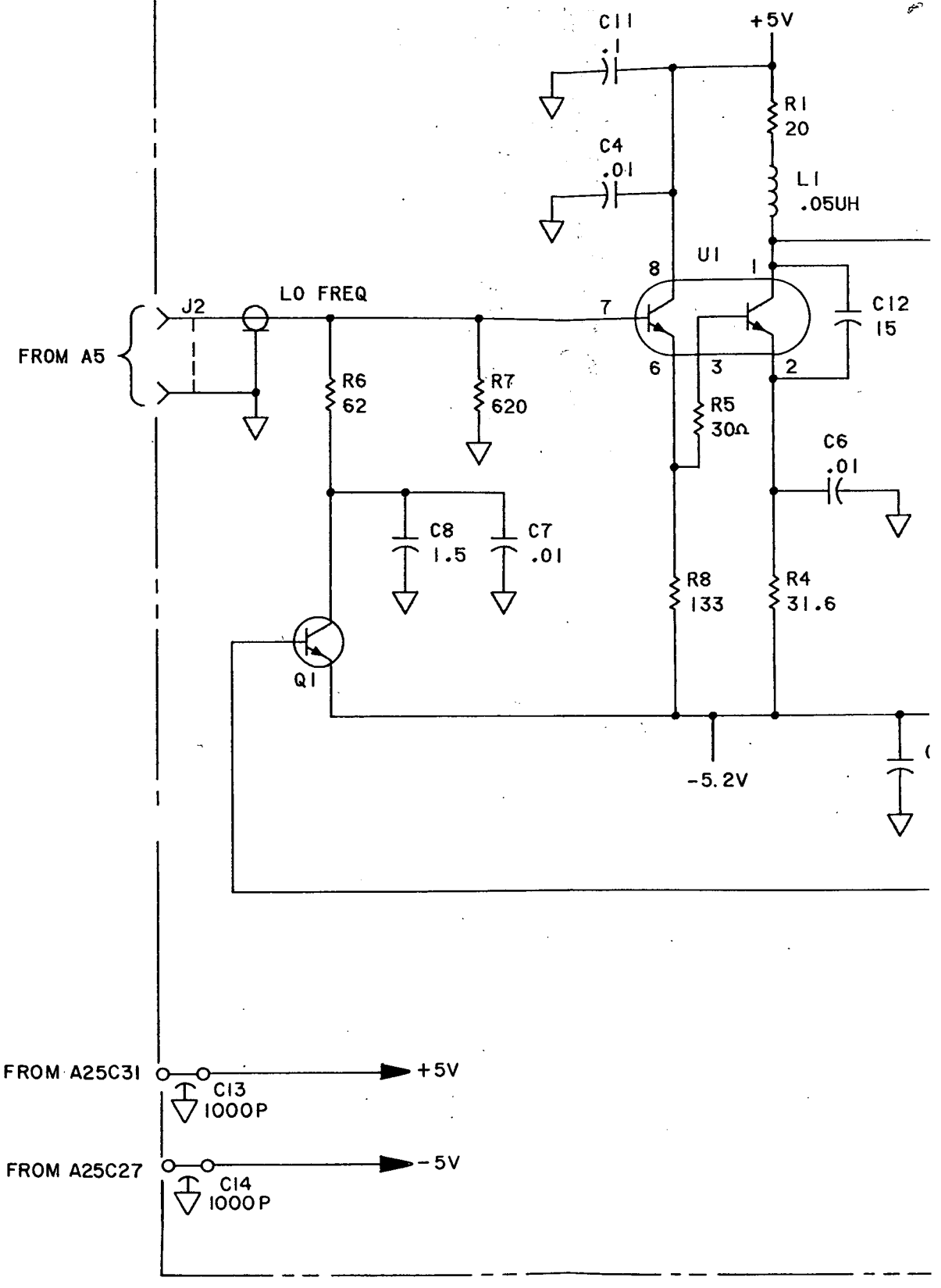

REFERENCE DESIGNATIONS

A26
C1-C14 CR1, CR2 L1 Q1 R1-R8 TP1, TP2 U1

TABLE OF ACTIVE ELEMENTS

REFERENCE DESIGNATION	HP PART NUMBER	MFR OR INDUSTRY PART NUMBER
CR1	1901-0796	Same
CR2	1901-0179	Same
Q1	1854-0071	Same
U1	1856-0060	Same