Errata

Title & Document Type: 4328A Milliohmmeter Operating and Service Manual

Manual Part Number: 04328-90008

Revision Date: March 1989

HP References in this Manual

This manual may contain references to HP or Hewlett-Packard. Please note that Hewlett-Packard's former test and measurement, semiconductor products and chemical analysis businesses are now part of Agilent Technologies. We have made no changes to this manual copy. The HP XXXX referred to in this document is now the Agilent XXXX. For example, model number HP8648A is now model number Agilent 8648A.

About this Manual

We've added this manual to the Agilent website in an effort to help you support your product. This manual provides the best information we could find. It may be incomplete or contain dated information, and the scan quality may not be ideal. If we find a better copy in the future, we will add it to the Agilent website.

Support for Your Product

Agilent no longer sells or supports this product. You will find any other available product information on the Agilent Test & Measurement website:

www.tm.agilent.com

Search for the model number of this product, and the resulting product page will guide you to any available information. Our service centers may be able to perform calibration if no repair parts are needed, but no other support from Agilent is available.

Agilent Technologies

OPERATIN

Return this manual to Kobe
Agilent Technologies International, Inc.
1-3-2 Murotani Nishiku Kobe Japan, 651-2241
Attention: Ayumi Sakamoto
TEL: 81-78-993-2883

MILLIOHMMETER

4328A

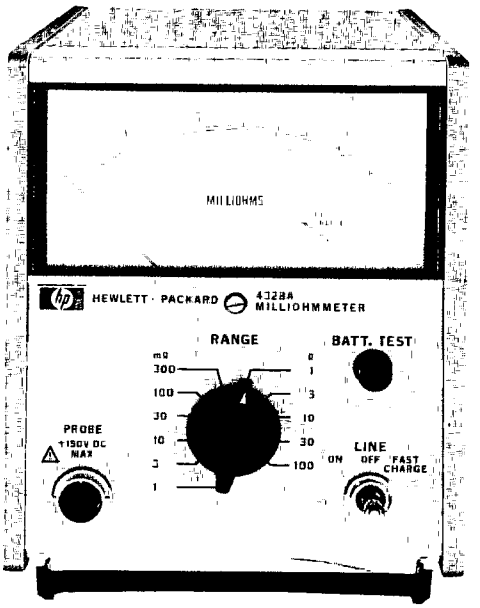

HEWLETT PACKARD

SAFETY SUMMARY

The following general safety precautions must be observed during all phases of operation, service, and repair of this instrument. Failure to comply with these precautions or with specific warnings given elsewhere in this manual violates safety standards of design, manufacture, and intended use of the instrument. Hewlett-Packard Company assumes no liability for the customer's failure to comply with these requirements.

GROUND THE INSTRUMENT

To minimize shock hazard, the instrument chassis and cabinet must be connected to an electrical ground. The instrument is equipped with a three-conductor ac power cable. The power cable must either be plugged into an approved three-contact electrical outlet or used with a three-contact to two-contact adapter with the grounding wire (green) firmly connected to an electrical ground (safety ground) at the power outlet. The power jack and the mating plug of the power cable meet International Electrotechnical Commission (IEC) safety standards.

DO NOT OPERATE IN AN EXPLOSIVE ATMOSPHERE

Do not operate the instrument in the presence of flammable gases or fumes. Operation of any electrical instrument in such an environment constitutes a definite safety hazard.

KEEP AWAY FROM LIVE CIRCUITS

Operating personnel must not remove instrument covers. Component replacement and internal adjustments must be made by qualified maintenance personnel. Do not replace components with power cable connected. Under certain conditions, dangerous voltages may exist even with the power cable removed. To avoid injuries, always disconnect power and discharge circuits before touching them.

DO NOT SERVICE OR ADJUST ALONE

Do not attempt internal service or adjustment unless another person, capable of rendering first aid and resuscitation, is present.

DO NOT SUBSTITUTE PARTS OR MODIFY INSTRUMENT

Because of the danger of introducing additional hazards, do not install substitute parts or perform any unauthorized modification to the instrument. Return the instrument to a Hewlett-Packard Sales and Service Office for service and repair to ensure that safety features are maintained.

DANGEROUS PROCEDURE WARNINGS

Warnings, such as the example below, precede potentially dangerous procedures throughout this manual. Instructions contained in the warnings must be followed.

WARNING

Dangerous voltages, capable of causing death, are present in this instrument. Use extreme caution when handling, testing, and adjusting.

SAFETY SYMBOLS

General Definitions of Safety Symbols Used On Equipment or In Manuals.

Instruction manual symbol: the product will be marked with this symbol when it is necessary for the user to refer to the instruction manual in order to protect against damage to the instrument.

Indicates dangerous voltage (terminals fed from the interior by voltage exceeding 1000 volts must be so marked).

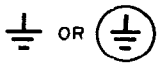

Protective conductor terminal. For protection against electrical shock in case of a fault. Used with field wiring terminals to indicate the terminal which must be connected to ground before operating equipment.

Low-noise or noiseless, clean ground (earth) terminal. Used for a signal common, as well as providing protection against electrical shock in case of fault. A terminal marked with this symbol must be connected to ground in the manner described in the installation (operating) manual, and before operating the equipment.

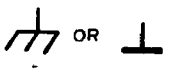

Frame or chassis terminal. A connection to the frame (chassis) of the equipment which normally includes all exposed metal structures.

Alternating current (power line).

Direct current (power line).

Alternating or direct current (power line).

WARNING — A **WARNING** denotes a hazard. It calls attention to a procedure, practice, condition or the like, which, if not correctly performed or adhered to, could result in injury or death to personnel.

CAUTION — The **CAUTION** sign denotes a hazard. It calls attention to an operating procedure, practice, condition or the like, which, if not correctly performed or adhered to, could result in damage to or destruction of part or all of the product.

Note — A Note denotes important information. It calls attention to a procedure, practice, condition or the like, which is essential to highlight.

Herstellerbescheinigung

Hiermit wird bescheinigt, daß das Gerät HP 4328A Milliohmmeter in Übereinstimmung mit den Bestimmungen von Postverfügung 1046/84 funkentstört ist.

Der Deutschen Bundespost wurde das Inverkehrbringen dieses Gerätes angezeigt und die Berechtigung zur Überprüfung der Serie auf Einhaltung der Bestimmungen eingeräumt.

Anm: Werden Meß- und Testgeräte mit ungeschirmten Kabeln und/oder in offenen Meßaufbauten verwendet, so ist vom Betreiber sicherzustellen, daß die Funk-Entstörbestimmungen unter Betriebsbedingungen an seiner Grundstücksgrenze eingehalten werden.

GERÄUSCHEMISSION

Lpa < 70 dB
am Arbeitsplatz
normaler Betrieb
nach DIN 45635 T. 19

Manufacturer's Declaration

This is to certify that this product, the HP 4328A Milliohmmeter, meets the radio frequency interference requirements of directive 1046/84. The German Bundespost has been notified that this equipment was put into circulation and was granted the right to check the product type for compliance with these requirements.

Note: If test and measurement equipment is operated with unshielded cables and/or used for measurements on open set-ups, the user must insure that under these operating conditions, the radio frequency interference limits are met at the border of his premises.

ACOUSTIC NOISE EMISSION

Lpa < 70 dB
operator position
normal operation
per ISO 7779

MANUAL CHANGES

HP 4328A

MILLIOHMMETER

MANUAL IDENTIFICATION

Model Number: HP 4328A
Date Printed: MAR. 1989
Part Number: 04328-90008

This supplement contains information for correcting manual errors and for adapting the manual to newer instruments that contain improvements or modifications not documented in the existing manual.

To use this supplement
1. Make all ERRATA corrections
2. Make all appropriate serial-number-related changes listed below

SERIAL PREFIX OR NUMBER	MAKE MANUAL CHANGES
ALL	1
1828J07291 and above	2
1828J07961 and above	3
1828J09594 and above	4

SERIAL PREFIX OR NUMBER	MAKE MANUAL CHANGES

▶ New Item

ERRATA

Page 5-7, Figure 5-3, (90Ω + j180Ω) Impedance:

Change the Part Number for the INDUCTOR to 9100-1686.

▶ Page 3-6, Paragraph 3-43, NOTES ON OPERATION:

Add the following NOTE to paragraph 3-45.

NOTE

An erroneous measurement reading can occur if both leads in one probe and the current lead only on the other probe makes contact with the device under test. Under this condition, the meter may indicate approximately mid scale on any meter range selected. You can verify if the measurement reading is correct by checking if the resistance measurement at two different ranges differ by more than 50 % of the indicated value.

NOTE

Manual change supplements are revised as often as necessary to keep manuals as current and accurate as possible. Hewlett-Packard recommends that you periodically request the latest edition of this supplement. Free copies are available from all HP offices. When requesting copies, quote the manual identification information from your supplement, or the model number and print date from the title page of the manual.

HEWLETT PACKARD

PRINTED IN JAPAN

► Page 5-2, Paragraph 5-13, 4328A PERFORMANCE CHECKS:

Add the following NOTE to paragraph 5-14.

NOTE

Before starting the Performance Check for the 4328A Option 001, confirm that the battery has enough charge by pressing the BATT. TEST button. If the pointer of meter is out of the BAT. CHARGED range on the meter scale, recharge the battery following the instructions given in Paragraph 3-9. The 4328A Option 001 will not operate properly, if the battery does not have enough charge.

CHANGE 1

► Section 6, Replaceable Parts, Table 6-2, Reference Designation Index:

See Table 1, Parts Information.

CHANGE 2

Section 6, Replaceable Parts, Table 6-2, Reference Designation Index:

See Table 1, Parts Information.

Page 4-7, Figure 4-5 and Page 8-19, Figure 8-17, A2 PHASE-SENSITIVE AMPLIFIER Assy. :

Change the value of R230* to 56kΩ.

Page 8-21, Figure 8-19:

Change the value of R3 to 33kΩ.

Page 8-23, Figure 8-21:

Change the value of R3 to 33kΩ.

CHANGE 3

Page 6-8, Table 6-2, Reference Designation Index:

See Table 1, Parts Information.

Page 8-17, Figure 8-14: A3 OSCILLATOR Assy.

Change the value of R335 to 133kΩ.

CHANGE 4

Page 6-5, Table 6-2, Reference Designation Index:

See Table 1, Parts Information.

Page 4-7, Figure 4-5 and Page 8-19, Figure 8-17, A2 PHASE-SENSITIVE AMPLIFIER Assy. :

Change the value of R234* to 3.16kΩ.

Table 1. Parts Information

CHANGE	PAGE	NOTE	REFERENCE DESIGNATION	HP PART NUMBER	DESCRIPTION
1	6-7	► C	A3Q312	1853-0314	TRANSISTOR: SILICON
	6-11	► C	F1	2110-0234	FUSE SLOW BLOW 100mAT
2	6-5	D	A2R230*	0698-3161	R: FXD 38.3kΩ 1% 1/8W
		A	A2R230*	0698-5635	R: FXD 56kΩ 1% 1/8W
	6-11	D	DS1	1450-0566	LAMP: INDUCTOR
		A	DS1	1450-0613	LAMP: INDUCTOR
		D	R3	0683-4735	R: FXD COMP 47kΩ 5% .25W
		A	R3	0683-3335	R: FXD COMP 33kΩ 5% .25W
3	6-8	D	A3R335	0683-1545	R: FXD COMP 150kΩ 5% 1/4W
		A	A3R335	0698-3451	R: FXD COMP 133kΩ 1% 1/8W
4	6-5	D	A2R234*	0757-0439	R: FXD 6.81kΩ 1% 1/8W
		A	A2R234*	0757-0279	R: FXD 3.16kΩ 1% 1/8W

►: NEW ITEM
A: Added
D: Deleted
C: Change

OPERATING AND SERVICE MANUAL

MODEL 4328A
MILLIOHMMETER

SERIALS 1828J06421 AND ABOVE

See Section VII for Other Serial Prefixes.

© COPYRIGHT: YOKOGAWA-HEWLETT-PACKARD, LTD 1967
9-1, TAKAKURA-CHO, HACHIOJI-SHI, TOKYO, JAPAN

Manual Part No. 04328-90008
Microfiche Part No. 04328-90058

Printed : MAR. 1989

HEWLETT PACKARD

TABLE OF CONTENTS

Section		Page
I	GENERAL INFORMATION	1-1
1-1.	Description	1-1
1-9.	Accessories Furnished	1-9
1-11.	Instrument Identification	1-2
1-13.	Manual Changes	1-2
II	INSTALLATION	2-1
2-1.	Introduction	2-1
2-3.	Unpacking and Inspection	2-1
2-5.	Storage and Shipment	2-1
2-6.	Packaging	2-1
2-7.	Environment	2-1
2-8.	Installation	2-1
2-10.	Combining Case	2-1
2-12.	Adapter Frame	2-1
2-14.	Power Connection	2-1
2-15.	Line Voltage	2-1
2-16.	Power Cable	2-1
III	OPERATION	3-1
3-1.	Introduction	3-1
3-4.	Controls, Connectors, and Indicators	3-1
3-6.	Battery Operation	3-1
3-10.	Instrument Temperature Range	3-1
3-12.	Measurement	3-1
3-15.	Operating Procedure	3-1
3-17.	Measuring Voltage on Samples	3-1
3-21.	Applied Current on Samples and Maximum Power Dissipation	3-5
3-24.	Effect of Series Reactance of Samples	3-5
3-26.	DC Bias Superimposed	3-5
3-30.	Recorder Output	3-5
3-32.	Probe Connection	3-5
3-33.	General	3-5
3-35.	Probe Installation	3-6
3-37.	16005A Clip-Type Probe	3-6
3-39.	16006A Pin-Type Probe	3-6
3-41.	16007A, B Test Leads	3-6
3-43	Notes on Operation	3-6
3-44	In using the 1 and 3m Ohm Ranges, Connection of Current Terminals to the Sample must be a Firm, Positive Contact	3-6
3-46.	In using the 1 and 3m Ohm Range, Large Electrically Conductive Materials should not be placed close to the Probe or their Cables	3-6
3-48.	Changing Test Lead Length	3-7
IV	THEORY OF OPERATION	4-1
4-1.	Introduction	4-1
4-4.	Simplified Functional Description	4-1
4-7.	Oscillator Circuit	4-2
4-10.	Schmitt Trigger Circuit	4-2

Section		Page
IV	THEORY OF OPERATION (Cont'd)	
4-12.	20mV Peak Limiter	4-2
4-14.	Phase Sensitive Voltmeter	4-2
V	MAINTENANCE	5-1
5-1.	Introduction	5-1
5-3.	Contents	5-1
5-4.	Performance Checks	5-1
5-6.	Adjustments	5-1
5-9.	Test Equipment	5-1
5-11.	Maintenance	5-2
5-13.	4328A Performance Checks	5-2
5-15.	Mechanical Meter Zero	5-2
5-17.	Linearity Check	5-2
5-18.	Full Scale Check	5-2
5-19.	Cover Removal and Replacement	5-2
5-21.	Top Cover Removal	5-2
5-22.	Top Cover Replacement	5-2
5-23.	Bottom Cover Removal	5-3
5-24.	Bottom Cover Replacement	5-3
5-25.	Adjustment Procedures	5-3
5-27.	Mechanical Meter Adjustment	5-3
5-28.	DC Power Supply Check	5-3
5-30.	Bias Adjustment	5-3
5-32.	T302 Adjustment	5-3
5-33.	Oscillator Output Adjustment	5-3
5-34.	Electrical Zero Adjustment	5-3
5-35.	Linearity Adjustment	5-3
5-36.	Full Scale Adjustment	5-4
5-37.	Recorder Output Adjustment	5-4
5-38.	Reactance Component Offset Adjustment	5-4
5-39.	Isolating Trouble in Transistor Circuits	5-5
5-40.	General	5-5
5-41.	In Circuit Testing	5-5
5-45.	Out-of-Circuit Testing	5-5
5-47.	Component Replacement in Etched Circuits	5-5
5-48.	General	5-5
5-49.	Axial-Lead Components	5-5
5-51.	Other Components	5-5
VI	REPLACEABLE PARTS	6-1
6-1.	Introduction	6-1
6-4.	Ordering Information	6-1
VII	MANUAL CHANGES AND OPTIONS	7-1
7-1.	Options	7-1
7-3.	Special Instruments	7-1
7-5.	Manual Changes	7-1
7-7.	Later Instruments	7-1
7-8.	Earlier Instruments	7-1
VIII	TROUBLESHOOTING AND CIRCUIT DIAGRAMS	8-1
8-1.	Introduction	8-1
8-5.	Troubleshooting	8-1
8-8.	Schematics	8-1

LIST OF TABLES

Number	Title	Page
1-1.	Specifications	1-2
3-1.	Characteristics of Applied Current on Samples and Maximum Power Dissipation	3-5
3-2.	Maximum Values of Resistance and Length of Lead Wire	3-7
5-1.	Recommended Test Equipment	5-1
5-2.	Linearity Test	5-2
5-3.	Full Scale Test	5-2
5-4.	Power Supply Test	5-3
5-5.	Out-of-Circuit Transistor Resistance Measurements	5-6
5-6.	Safe Ohmmeter Range for Transistor Resistance Measurements	5-6
5-7.	Etched Circuit Soldering Equipment	5-7
6-1.	List of Reference Designators and Abbreviations	6-1
6-2.	Reference Designation Index	6-2
7-1.	Backdating Changes	7-1
8-1.	4328A Overall Troubleshooting	8-5
8-2.	Oscillator P/O A3 Troubleshooting	8-7
8-3.	Schmitt Trigger P/O A3 Troubleshooting	8-7
8-4.	Flip-Flop P/O A3 Troubleshooting	8-9
8-5.	Limitter P/O A3 Troubleshooting	8-9
8-6.	AC Amplifier P/O A2 Troubleshooting	8-11
8-7.	Phase Detector and DC Amplifier P/O A2 Troubleshooting	8-11
8-8.	Modulator P/O A2 Troubleshooting	8-11
8-9.	Power Supply Troubleshooting	8-13
8-10.	Ni-Cd Power Supply Troubleshooting	8-15

LIST OF ILLUSTRATIONS

Number	Title	Page
1-1.	Model 4328A Milliohmmeter	1-1
3-1.	Front Panel Controls and Connectors	3-2
3-2.	Rear Panel Controls and Connectors	3-3
3-3.	Operating Procedure	3-4
3-4.	Probe Combination	3-5
3-5.	Probe Installation	3-6
3-6.	16005A Clip-type Probes	3-6
3-7.	16006A Pin-type Probes	3-6
3-8.	16007A/B Test Leads	3-6
3-9.	4-Terminal Device Measurement	3-7
4-1.	Basic Low Resistance Measurement	4-1
4-2.	Simplified Block Diagram	4-1
4-3.	Operation of Phase Detector	4-2
4-4.	Model 4328A Oscillator Talking Schematic	4-5
4-5.	Model 4328A Phase-Sensitive Amplifier Talking Schematic	4-7
4-6.	Model 4328A Power Supply Talking Schematic	4-9
4-7.	Model 4328A Ni-Cd Power Supply Talking Schematic	4-11
5-1.	Transistor Biasing Characteristics	5-4
5-2.	(0.9mΩ + j 1.8mΩ) Impedance	5-7
5-3.	(90Ω + j 180Ω) Impedance	5-7
7-1.	Partial Schematic of A2 Ass'y	7-1
7-2.	Partial Schematic of A3 Ass'y	7-2
8-1.	Schematic Diagram Notes	8-2
8-2.	Overall Block Diagram	8-3
8-3.	Model 4328A Waveforms	8-4
8-4.	Model 4328A Waveform Test Point Locations	8-5
8-5.	Model 4328A Left Internal View	8-6
8-6.	Model 4328A Bottom Internal View	8-6
8-7.	Model 4328A Rear Internal View	8-8
8-8.	Model 4328A Right Internal View	8-10
8-9.	Model 4328A Top Internal View	8-10
8-10.	Model 4328A Power Supply PC Board	8-12
8-11.	Model 4328A Ni-Cd Power Supply PC Board	8-14
8-12.	Oscillator Assembly A3 Component Locations	8-16
8-13.	Range Switch Assembly A4 Component Locations	8-16
8-14.	Oscillator Assembly A3 Schematic	8-17
	Range Switch Assembly A4 Schematic	8-17
	Mother Board Assembly A5 Schematic	8-17
8-15.	Phase Sensitive Amplifier Assembly A2 Component Locations	8-18
8-16.	Mother Board Assembly A5 Component Locations	8-18
8-17.	Phase Sensitive Amplifier Assembly A2 Schematic	8-19
	Mother Board Assembly A5 Schematic	8-19
8-18.	Power Supply Assembly A1 Component Locations	8-20
8-19.	Power Supply Assembly A1 Schematic	8-21
	Mother Board Assembly A5 Schematic	8-21
8-20.	Ni-Cd Power Supply Assembly A6 Component Locations	8-22
8-21.	Mother Board Assembly A5 Schematic	8-23
	Ni-Cd Power Supply Assembly A5 Schematic	8-23

SECTION I
GENERAL INFORMATION

1-1. DESCRIPTION

1-2. The Model 4328A Milliohmmeter (Fig. 1-1) is a portable instrument designed to measure low resistance with speed and accuracy. Covering a resistance range of .001Ω to 100Ω, the instrument uses a Kelvin Bridge method to obtain high sensitivity. Although the 4 terminal method is used to insure accuracy, only 2 probes placed on each end of the sample are used in the actual measurement.

1-3. To avoid measurement errors due to thermal emfs, contact potential differences and electrolytic polarization, the measurement utilizes a 1kHz signal, and is insensitive to d. c. errors.

1-4. In the measurement of contact resistance of components used in low level signal circuits, switches, relays and connectors, the measurement voltage applied should be less than 20 mV peak so that thin insulating films are protected from breakdown. With the 4328A, voltage across samples is less than 200μV peak on any range (when proper range setting used), and a maximum voltage of 20mV if incorrect range settings are used.

1-5. The 4328A can be used to measure heat-sensitive samples because the power dissipation in samples is very low. Voltage applied to samples is automatically limited to permit safe measurement of fuses and explosives.

1-6. A unique phase discriminator in the meter circuit insures accurate measurement of samples with series reactance up to twice full scale resistance.

1-7. 150V superimposed dc bias may be present on samples during measurement. Thus, direct measurement of incremental resistance of back biased diodes may be performed, permitting use of the 4328A in the design of semiconductor circuitry.

1-8. Complete specifications of the Model 4328A are given in Table 1-1.

1-9. ACCESSORIES FURNISHED

1-10. Model 16005A Clip-type probe, 16006A Pin-type probe and 16007A B Test Leads are furnished; these probes or test leads may be "mixed or matched" in any configuration determined by the form of the sample to be measured. Also detachable power cord is supplied with the Model 4328A Milliohmmeter.

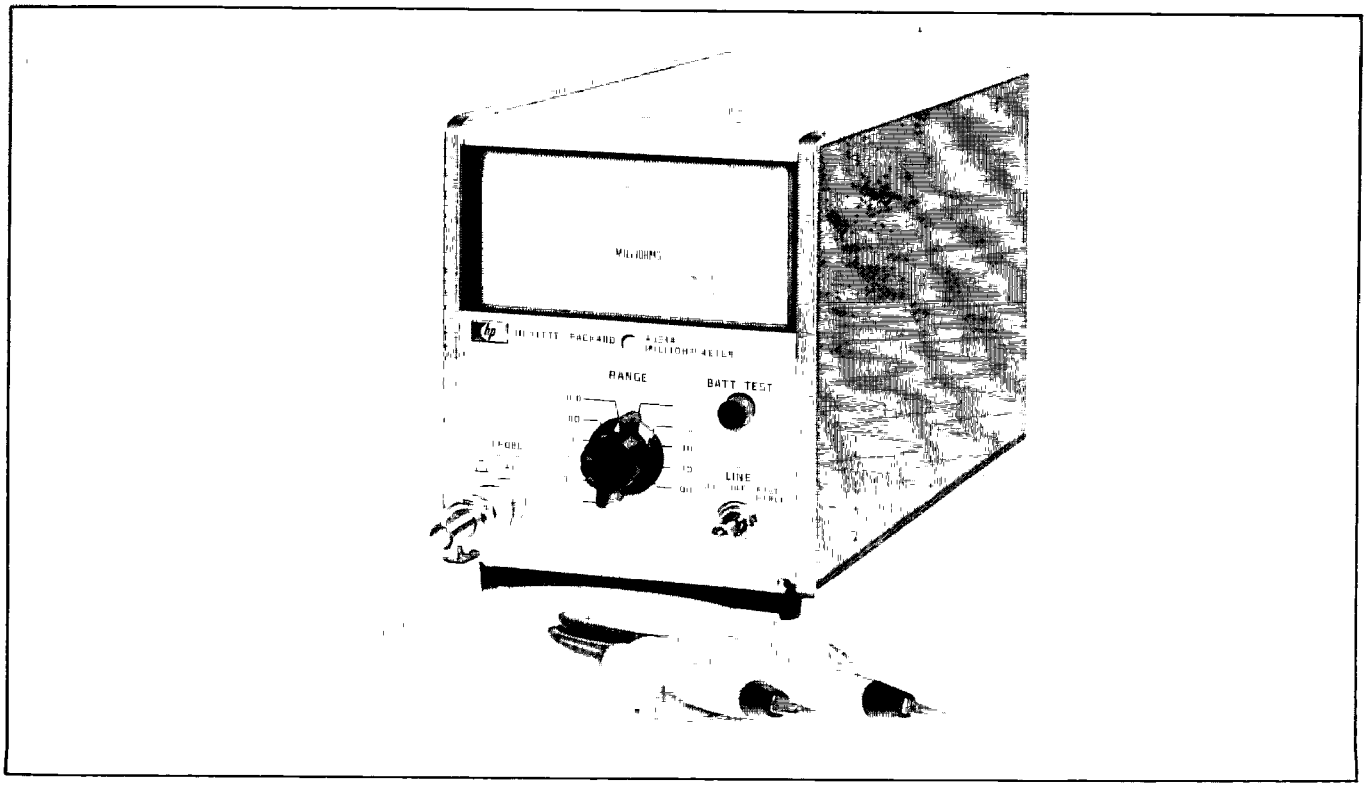

Figure 1-1. Model 4328A Milliohmmeter

1-11. INSTRUMENT IDENTIFICATION

1-12. Hewlett-Packard uses a two-section nine-character (0000J00000) or eight-character (000-00000 or 000J00000) serial number. The first three or four digits (serial prefix) identify a series of instrument; the last five digits identify a particular instrument in that series. A letter placed between the two sections identifies the country where the instrument was manufactured. The serial number appears on a plate located on the rear panel. All correspondence with Hewlett-Packard Sales/Service Offices with regard to an instrument should refer to the complete serial number.

1-13. MANUAL CHANGES

1-14. This manual provides operating and service information for the HP Model 4328A a portable instrument for measurement of low resistances. Information in this manual applies directly to instruments (as manufactured) with serial numbers prefixed by the three digits indicated on the title page. If the serial prefix of the instrument is above that on the title page, a "Manual Change" sheet supplied will describe changes which will adapt this manual to provide correct coverage. Technical correction (if any) due to known errors in print are called Errata and are shown on the change sheet. And if the serial prefix or number of the instrument is below that on the title page, see SECTION VII MANUAL CHANGES AND OPTIONS. For information on manual coverage of any HP instrument, contact the nearest HP Sales/Service Office (addresses are listed at the rear of this manual).

Table 1-1. Specifications

Resistance Range: 0.001 to 100 ohms in a 1, 3, 10 sequence.

Resolution: max. resolution 0.02 on 0-1 scale.
0.05 on 0-3 scale.

Accuracy: ±2% of full scale. Accuracy is unaffected by series reactance of samples with magnitude of up to 2 times full-scale resistance value.

Measuring Frequency: 1000Hz ±100Hz

Voltage across sample: 200μV peak at full scale.

Maximum voltage across sample: 20mV peak in any case.

Measuring current and power dissipation in sample.

Range (ohms)	* Applied Current (mA)	** Maximum Dissipation in Samples (μW)
0.001	150	23
0.003	50	8
0.01	15	2.3
0.03	5	0.8
0.1	1.5	0.23
0.3	0.5	0.08
1	0.15	0.023
3	0.05	0.008
10	0.015	0.0023
30	0.005	0.0008
100	0.0015	0.00023

* Constant for each range.
** Proportional to meter deflection, full scale values given.

Superimposed DC: 150V dc maximum may be superimposed on samples from an external source.

Recorder Output: 0.1V dc output at full scale meter deflection. Output resistance approx. 1k ohm.

Operating Temperature Range: 0 to 55°C.

Power: 115/230V ±10%, 50 to 60Hz, 2 W Optional rechargeable battery provides up to 15 hours continuous operation. Automatic battery recharge.

Weight: 7 lbs (3.2kg)

Accessories Furnished: 16005A Clip-type Probes
16006A Pin-type Probes
16007A Test Lead
16007B Test Lead
Detachable Power Cord
16143A Probe Cable

Accessories Available:
5060-0797 Rack Adapter Frame (holds three instruments the size of the 4328A.
16459A Carrying Case
11056A Handle Kit

Combining Cases.
1051A 11 - 1/4 in. (286mm) deep
1052A 16 - 3/8 in. (416mm) deep
The combining cases accept the 1/3 -module HP instruments for bench use or rack mounting. See 1051A data sheet for detail.

Options:
001: Rechargeable battery installed, provides up to 15 hours continuous operating.

Dimensions:

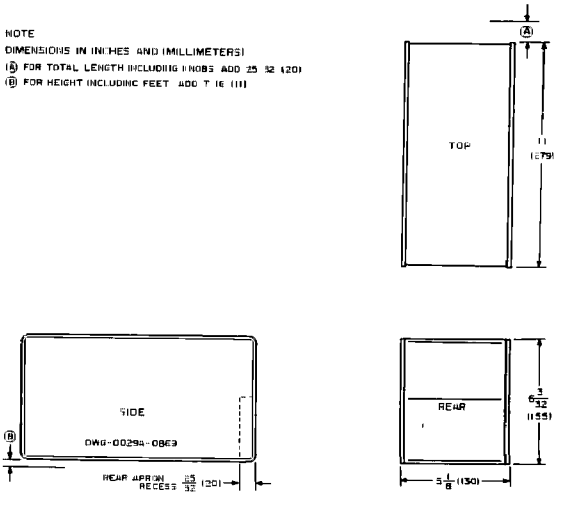

SECTION II
INSTALLATION

2-1. INTRODUCTION

2-2. This section contains information for unpacking, inspection, repackaging, storage, and installation of the Model 4328A.

2-3. UNPACKING AND INSPECTION

2-4. If the shipping carton is damaged, ask that the carrier's agent be present when the instrument is unpacked. Inspect the instrument for damage (scratches, dents, broken knobs, etc.). If the instrument is damaged or fails to meet specifications, notify the carrier and the nearest Hewlett-Packard Field Office (see list at back of this manual) Retain the shipping carton and the padding material for the carrier's inspection. The field office will arrange for the repair or replacement of your instrument without waiting for the claim against the carrier to be settled.

2-5. STORAGE AND SHIPMENT

2-6. PACKAGING. To protect valuable electronic equipment during storage or shipment always use the best packaging methods available. Your Hewlett-Packard field office can provide packing material such as that used for original factory packaging. Contract packaging companies in many cities can provide dependable custom packaging on short notice. Here are a few recommended packaging methods:

a. RUBBERIZED HAIR. Cover painted surfaces of instrument with protective wrapping paper Pack instrument securely in strong corrugated container (350 lb sq in. bursting test) with 2-inch rubberized hair pads placed along all surfaces of the instrument. Insert fillers between pads and container to ensure a snug fit.

b. EXCELSIOR. Cover painted surfaces of instrument with protective wrapping paper. Pack instrument in strong corrugated container (350 lb sq in. bursting test) with a layer of excelsior about 6 inches thick packed firmly against all surfaces of the instrument.

2-7 ENVIRONMENT. Conditions during storage and shipment should normally be limited as follows:

a. Maximum altitude, 20,000 feet.

b. Temperature, −40°F (−40°C) to 167°F (75°C).

c. Temperature (with Opt. 001), 32°F (0°C) to 113°F (45°C).

2-8. INSTALLATION

2-9. The Model 4328A is a submodular unit, equipped with plastic feet and tilt stand for bench operation as shipped from the factory. However, when used in combination with other submodular units it can be bench and or rack mounted. The HP combining case and adapter frame are designed for this purpose and are available through your Hewlett-Packard Sales and Service office.

2-10. COMBINING CASE (HP Models 1051A or 1052A).

2-11. The combining case is a full-module unit which accepts various combinations of submodular units. Being a full-module unit, it can be bench or rack mounted and is analogous to any full-module instrument.

2-12. ADAPTER FRAME (HP Part No. 5060-0797).

2-13. The adapter frame is a rack frame that accepts any combination of submodular units. It can be rack mounted only.

2-14. POWER CONNECTION

2-15. LINE VOLTAGE. The Model 4328A may be operated from either 115- or 230-volt (±10%) 50 or 60Hz power lines, which can supply approximately 2 watts. A slide switch on the rear panel permits quick conversion for operation from either voltage. Insert a narrow-blade screwdriver in the switch slot and slide the switch to the right for 230-volt operation ("230" marking exposed) or to the left for 115-volt operation ("115" marking exposed). The Model 4328A is supplied with a 0.1 ampere fuse for either 115- or 230-volt operation.

CAUTION

To avoid damage to the instrument, before connecting the power cable, set the 115 230 switch for the line voltage to be used.

2-16. POWER CABLE. To protect operating personnel, the National Electrical Manufacturers' Association (NEMA) recommends that instrument panels and cabinets be grounded. Accordingly, the Model 4328A is equipped with a detachable three-conductor power cable which, when plugged into an appropriate receptacle, grounds panel and cabinet. The offset pin of the three-prong connector is the ground pin Proceed as follows for power cable installation.

a. Connect flat plug (3-terminal connector) to LINE jack at rear of instrument.

b. Connect plug (2-blade with round grounding pin) to 3-wire (grounded) power outlet. Exposed portions of instrument are grounded through the round pin on the plug for safety; when only 2-blade outlet is available, use connector adapter (HP Part No 1251-8196) the connect the green grounding tab to power line ground

SECTION III
OPERATION

3-1. INTRODUCTION

3-2. The Model 4328A is effective in measuring contact resistance such as in relays, switches, connectors and incremental resistance of diodes, or lead resistance of integrated circuits. Measurement is made by the 4 terminal method, actually utilizing on 2 probes One current lead and one voltage lead are incorporated in each probe. The probes are branched off through a connector in the probe cord that leads from the front panel and the user can rearrange the different kinds of probes or test leads at will, according to the form of the sample. This section includes a complete description of the Milliohmmeter operating controls, its accessories, characteristics and techniques of uses.

3-3. The range of 4328A extends from 1 milliohm to 100 ohms full scale in a 1, 3, 10 sequence. Maximum sensitivity is 20μ ohms.

3-4. CONTROLS, CONNECTORS AND INDICATIONS

3-5. The front and rear panel controls, connectors and indicators are explained in Figure 3-1 and 3-2. The descriptions are keyed to the corresponding items which are indicated on the figure.

3-6. BATTERY OPERATION

3-7. The HP 4328A Option 001 can operate from a rechargeable Nickel-Cadmium battery or ac line power. Continuous battery operation is possible for approximately 15 hours after a full charge. The 4328A automatically operates on its internal batteries whenever the ac line power is disconnected, and the batteries are continually charging when the power cable is connected to the power line, when the LINE lamp is lit.

3-8. Before operating the 4328A on batteries, check the battery voltage with the BATT. TEST button. When the BATT TEST button is pressed, the pointer of mater indicates the internal battery voltage. If the pointer is in the range of BAT. CHARGED of the meter, the battery voltage is high enough to use. If the pointer is out of the range of BAT CHARGED, the battery must be recharged first.

3-9. The battery can be charged using the following procedure (when in the BAT. CHARGED range or out of the BAT CHARGED range).

1) Connect the power plug to the ac line, and set the LINE switch to FAST CHARGE. The LINE lamp is lit and indicates the battery is charging.
2) Charge the battery until the pointer is in the range of BAT. CHARGED by pressing the BATT. TEST. It takes approximately 4 hours to charge up a full discharged battery into the BAT CHARGED range, and takes approximately 48 hours to fully charge.

CAUTION

The four Nickel-Cadmium batteries in the Option 001 are in hermetically-sealed containers. Under high temperatures (above 50°C), hydrogen in the hermetically-sealed battery container can build up to high pressure causing damage to the batteries and or the instrument. The user must be cognizant of temperature extremes while charging the batteries. Do not charge batteries when temperature is above 40°C.

3-10 Instrument Temperature Range

3-11. Model 4328A Option 001 has certain temperature limitations. Operating temperature upper limits for battery operation are lower compared with conventional ac operation (0°C to 50°C). Internal temperatures in excess of 50°C are quite easy to obtain if the instrument is left in the sun, even if the air temperature is quite moderate A good practice is to be certain that the instrument is not stored or operated in direct sunlight to avoid the possibility of reduced performance. Keep this limitation in mind when operating in field conditions to obtain safe and stable operation.

CAUTION

Nickel-Cadmium cells in this instrument are hermetically-sealed. Damage to cells may occur if exposed to extremely high temperatures (above 50°C).

3-12. MEASUREMENT

3-13. Measurement is made by the 4 terminal method to obtain accurate measurement of low resistance, actually two 2-terminal probes are used so that operation of the instrument is quite easy. The probes furnished in Model 4328A are 16005A probe, 16006A probe and 16007 A/B conventional 4 terminal test leads.

3-14. Under no conditions will voltage across the sample exceed 20mV peak, even in the case of incorrect range settings. When the correct range setting is used, voltage across the sample is less than 200μV peak. For optimum use of the instrument, range should be set on a higher range when making the initial connection followed by switching the selector to the appropriate lower range.

3-15. OPERATING PROCEDURE

3-16. Figure 3-3 illustrates operating procedure.

3-17. MEASURING VOLTAGE ON SAMPLES

3-18. When the voltage applied between the contact is high, the oxidized film formed between the contact is destroyed thereby, and the resistance value measured may be smaller than under actual use. Moreover, once this happens, it will never recover the former condition even if the voltage or the current is cut off.

3-19. According to the recommended standard of IEC (Internationa Electrotechnical Commission), measurement of contact resistance by ac should be conducted

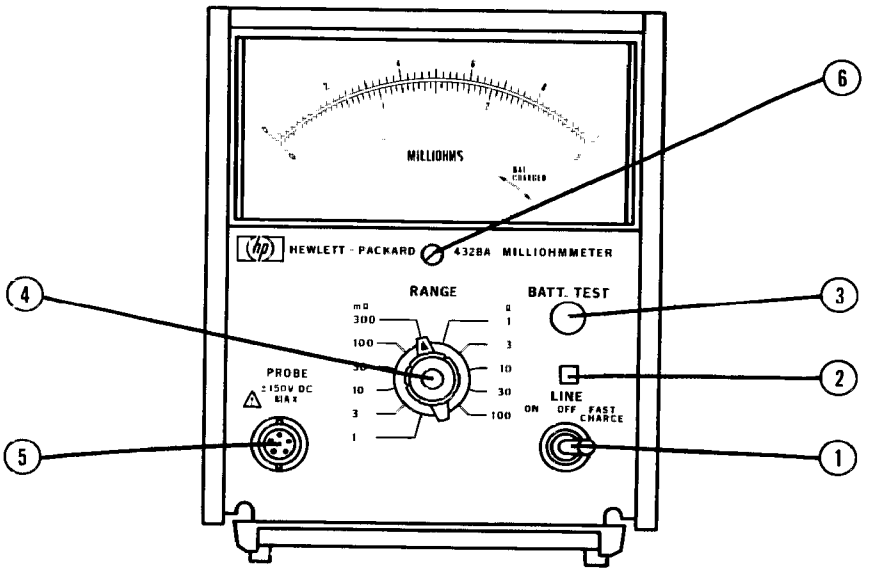

1. LINE-ON/OFF/FAST CHARGE: Instrument power ON/OFF/FAST CHARGE toggle switch connects either ac line or internal battery (option 001 only) to internal voltage regulator circuit and provides fast charge to the battery.

2 LINE lamp: This pilot lamp glows when the instrument is turned ON. In option 001, the pilot lamp glows when power cord is connected to ac 115/230V source when power switch is in ON or FAST CHARGE positions. When the pilot lamp glows (Option 001) batteries are charging continuously.

3. BATT. TEST: Push on/off switch (non-lock) - a battery test is made when the push button is depressed irrespective of the position of the ON/OFF/FAST CHARGE switch.

4. RANGE: Low resistance measurement range selector; select ranges from 1mΩ full scale to 100Ω full scale.

5. PROBE: Cord, for measurement, divides into 2 probes at modular connector.

⚠ CAUTION

Superimposed DC voltage limits are as follows:

(1) Between High and Low terminals ±150Vdc maximum.

(2) Between Low terminal and GND ±500Vdc maximum.

Do not superimpose DC voltage above sample limits.

6. Mechanical Meter Zero: Sets meter suspension so that meter indicates zero. To adjust the zero.

a. Remove power from the instrument.

b. Turn the adjustment screw clockwise until the indicator falls below zero and comes back up to zero again.

c. Turn the adjustment very slightly counter-clockwise to free up the mechanism from the adjusting peg.

Figure 3-1. Front Panel Controls and Connectors

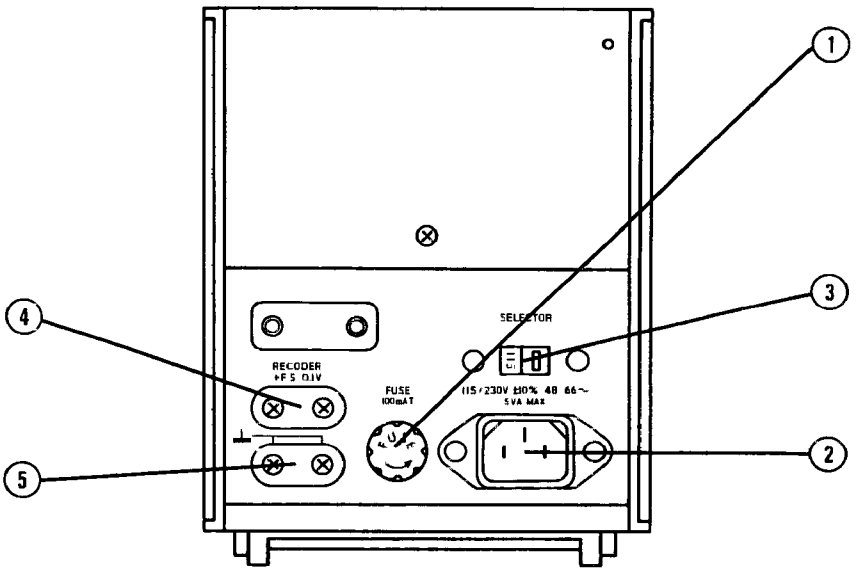

1. Line Fuse: Select fuse to match line voltage in use. For 115V ac or for 230V ac use 0.1 amp slow blow fuse.

2. Power Cord Input: Use power cord provided, (HP 8120-1378) Line Power limits are 115/230V ac, 50 - 60Hz. Check FUSE rating and position of line voltage slide switch before connecting power.

3. Line Voltage Slide Switch: Set to line voltage available (115 or 230V ac, 50 - 60Hz).

4. RECORDER OUTPUT: 0.1V dc output is obtained at full scale meter deflection directly proportional to meter deflection. Output impedance is approximately 1000Ω.

5. Cabinet Ground: The recorder output is normally floating and Cabinet Ground terminal is tied to earth ground. When recorder output is connected to the input of the recorder and when the recorder cabinet is not tied to earth ground, the recorder cabinet should be connected to this Cabinet Ground terminal.

Figure 3-2. Rear Panel Controls and Connectors

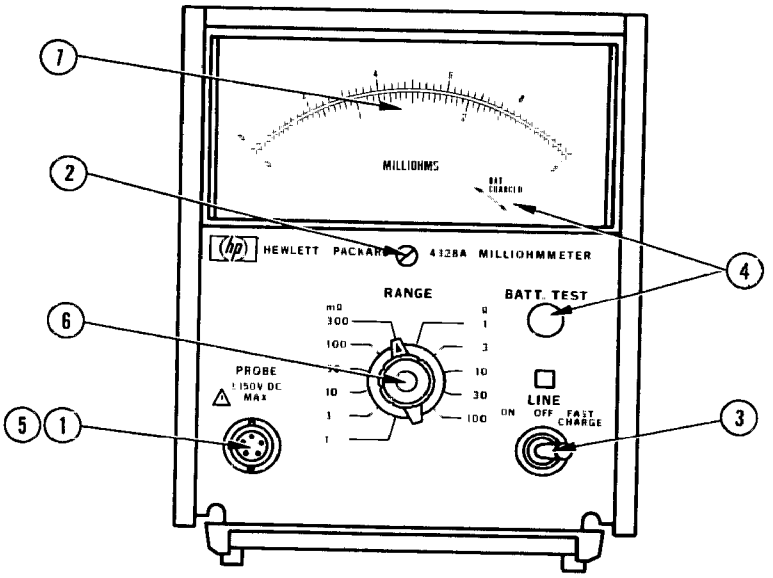

1. Choose the appropriate probes or test leads and put them into connector on the cord.

2. Meter Mechanical Zero.

   a. With the instrument turned off, rotate the meter adjustment screw clockwise until the pointer approaches the zero mark from the left.

   b. Continue the clockwise rotation until the pointer coincides with the zero mark. If the pointer overshoots, continue rotating the adjustment screw clockwise until the pointer once again approaches the zero mark from the left.

   c. Rotate the adjustment screw about three degrees counterclockwise to disengage screw adjustment from the meter suspension.

3. Turn 4328A LINE switch to ON. The LINE lamp grows when the instrument power is ON.

   In Option 001: The 4328A operates on its internal battery when the power cable is not connected to ac line and the LINE switch is ON. The 4328A operates and charges the battery when the power cable is connected to ac line and the LINE switch is ON. The 4328A charges the battery and does not operate when the LINE switch is in the FAST CHARGE position.

4 In Option 001: Press the BATT. TEST button When the pointer of the meter is in the range of BAT. CHARGED, the 4328A can operate. When the pointer is out of the BAT. CHARGED range, the battery must be recharged. Even when the power cable is connected to ac line, and when the pointer is out of the BAT. CHARGED range, the 4328A cannot operate normally until the battery is recharged. Refer to paragraph 3-9 for details

5. Connect the probes to the sample to be measured.

6. Rotate the range selector until the meter indicator moves on scale.

7. Read the meter indication.

Figure 3-3. Operating Procedure

by means of measuring instruments with voltage peak values of 20mV or less.

3-20. The instrument can not start oscillating if no sample is connected between the probes. When sample is connected between the probes, a positive feedback loop is formed, and the oscillator begins oscillation. Since constant current flows in the sample (in correct range setting), voltages across the sample are proportional to sample resistance and are less than .2mV peak on any range, at full scale deflection. When the resistance value of the sample is greater than that of the set range, an "over-voltage" protection circuit in the Model 4328A is called upon to prevent any voltage higher than 20mV peak from being applied to the sample. Thus, when an unknown sample is measured without special preparation, contact resistance is still accurately measurable without disturbance to the contact points.

3-21. APPLIED CURRENT ON SAMPLES AND MAXIMUM POWER DISSIPATION

3-22. With Model 4328A, the current and power applied to samples are extremely small, the maxima at measurement (i.e. when the meter needle deflects full scale) being as shown in the table below.

Table 3-1. Characteristics of Applied Current on Samples and Maximum Power Dissipation

RANGE (Ohm)	MEASURING CURRENT *1 (mA)	POWER DISSIPATION *2 (μW)
0.001	150	23
0.003	50	8
0.01	15	2.3
0.03	5	0.8
0.1	1.5	0.23
0.3	0.5	0.08
1	0.15	0.023
3	0.05	0.008
10	0.015	0.0023
30	0.005	0.0008
100	0.0015	0.00023

*1 Constant to each range.

*2 Proportional to meter deflection, against full scale deflection.

3-23. As shown in the above table, the power dissipation at sample is so small that fuses, detonators and semi-conductors can be safely measured.

3-24 EFFECT OF SERIES REACTANCE OF SAMPLES

3-25. The meter circuit of Model 4328A does not (within limits) respond to the series reactance of a sample. The meter indicates only the correct value of the pure resistance of the sample as long as the series reactance of the sample at 1kHz is less than twice full scale resistance value.

3-26. DC BIAS SUPERIMPOSED

3-27 DC bias may be present on samples, due to some source. Model 4328A measures with ac (1kHz), but its probe circuits incorporate dc blocking capacitors The instrument will not burn out nor will any measuring error will occur even when the probes come in direct contact with a dc circuit. The maximum dc voltage applicable between two probes is 150V.

3-28. Also, as the probes are floating from the instrument case (able to withstand voltage up to 500V dc; insulation resistance 10MΩ or over), it is possible to measure the resistance value of a sample having dc voltages relative to ground by connecting directly to it.

3-29. The dynamic resistance of elements whose V-I characteristics show non-linearities, (such as diodes) may be measured at an arbitrary DC bias point. In this type of measurement, note that the maximum voltage (1 kHz) applied to the sample is 0.2mV peak or less.

3-30. RECORDER OUTPUT

3-31. A RECORDER terminal is provided on the rear panel of the 4328A, providing a dc voltage proportional to the resistance of the sample permitting recording of consecutive tests, etc.

3-32. PROBE CONNECTIONS.

3-33. General

3-34. In Model 4328A, measurement is made by the 4-terminal method; special two-terminal probes that can make 4-terminal measurements (16005A Clip-type Probes and 16006A Pin-type Probes), and conventional 4-terminal test leads (16007A/B Test Leads) are furnished, and can be mixed or matched depending on sample type. For example, in the case of measurement of the contact resistance of printed circuit board connectors, it is usually convenient to use a combination of the clip-type probe and the pin-type probe as shown in Figure 3-4.

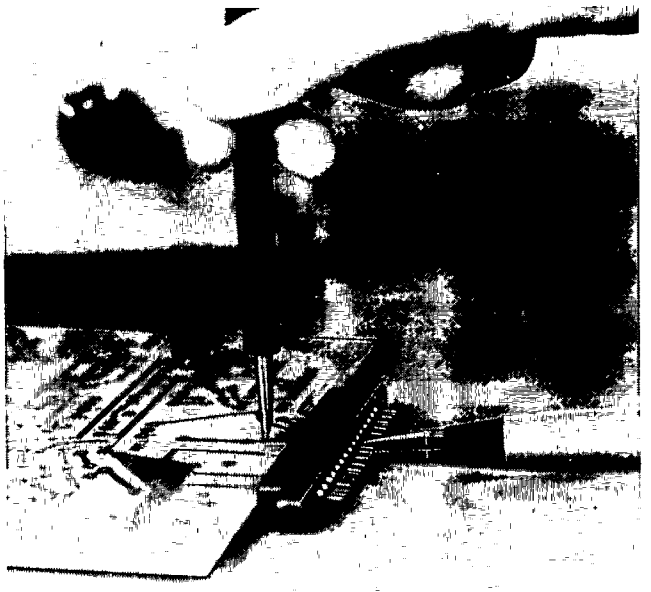

Figure 3-4. Probe Combination

3-35. Probe Installation

3-36. Plug in the probes to the connector at the end of 16143A Probe Cable. Note that the probe plugs must be oriented correctly before plugging in.

1) Connector at the end of probe cable has 4-contacts. Each pair of closely-spaced contacts comprise one set of probe contacts.

2) Plug the probe pins in to the connector such that the off set side faces outwards. Refer to Figure 3-5.

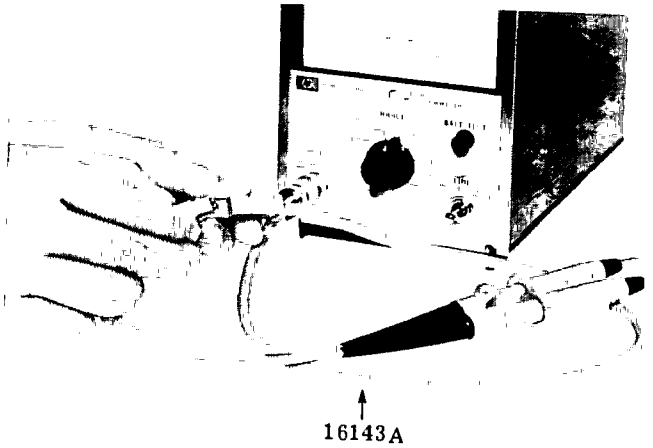

Figure 3-5. Probe Installation

3-37. 16005A Clip-type Probe

3-38. General purpose, alligator-jaw contacts provide positive gripping of samples. Upper contact (marked "V") is voltage terminal and lower contact is current terminal. When using this probe in 1mΩ range, it is not always possible to measure the sample because of extreme deflection of the meter. Figure 3-6 shows 16005A Clip-type Probes.

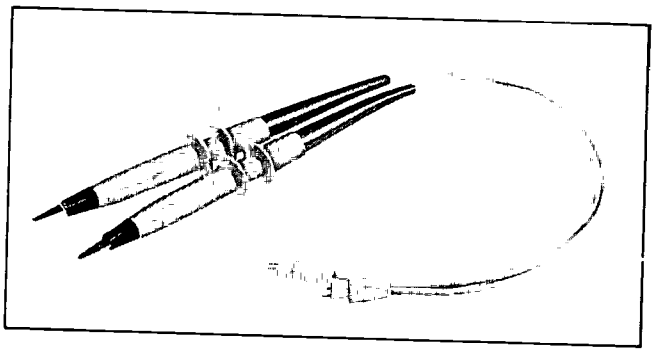

Figure 3-6. 16005A Clip-type Probes

3-39. 16006A Pin-type Probe

3-40. Probe tip is a voltage terminal and outer conductor is a current terminal. Probe tip is spring-loaded, so that both terminals firmly contact the sample under test. This probe is useful for press-on contact measurement such as printed board conductivity measurements. When using this probe in 1mΩ range, it is not always possible to measure the sample because of extreme deflection of the meter. (See Figure 3-7).

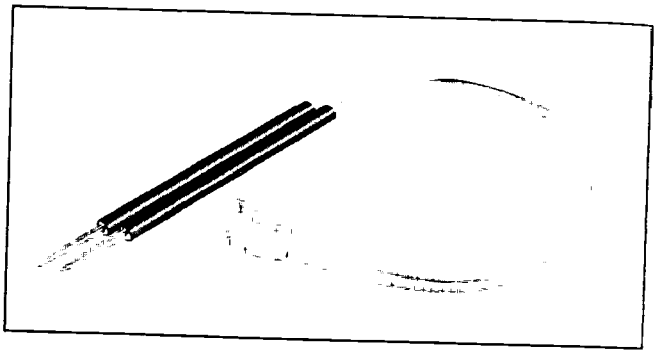

Figure 3-7. 16006A Pin-type Probes

3-41. 16007A/B Test Leads

3-42. These are provided for standard 4-terminal measurements. Each pair of test lead has a separate alligator clip voltage and current terminal. 16007A is furnished with a red cover the 16007B with a black cover. The black test lead is the voltage terminal and the grey test lead is the current terminal. (See Figure 3-8)

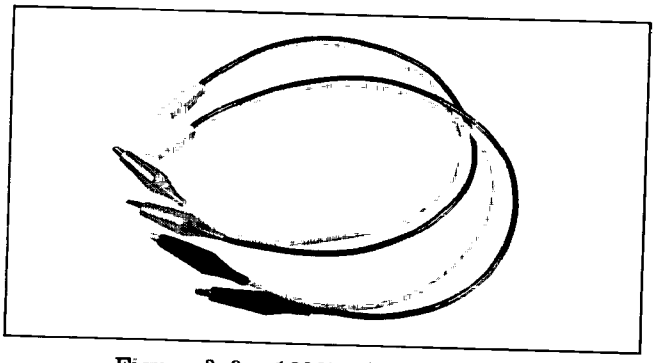

Figure 3-8. 16007A/B Test Leads

3-43. NOTES ON OPERATION

3-44. IN USING THE 1 AND 3m OHM RANGES, CONNECTION OF CURRENT TERMINALS TO THE SAMPLE MUST BE A FIRM, POSITIVE CONTACT.

3-45. With Model 4328A, the internal resistance of the constant current generator is approximately equal to the set range x500 Therefore, at 1m ohm and 3m ohms ranges, the internal resistances are 500m ohms and 1.5 ohms respectively. Excessive resistance at the probe contact can therefore relatively larger error than on other ranges. The quality of the connection of the probes to the sample may be determined by applying pressure on the connection point and noting if the meter needle deflects. Very poor contact or no contact whatsoever is indicated by a deflection off-scale

3-46. IN USING THE 1 AND 3m OHM RANGE LARGE ELECTRICALLY CONDUCTIVE MATERIALS SHOULD NOT BE PLACED CLOSE TO THE PROBES OR THEIR CABLES.

3-47. On the 1 and 3m ohm ranges, currents flowing in the current leads are 150mA and 50mA respectively large compared to other ranges. Moreover, the voltmeter section has very high sensitivity, so that, if a conductor surface is placed near and parallel to the current loop, large errors may result due to coupling between the current loop, the conductor and the voltage terminals. Therefore, at 1 and 3m ohm range, the probes and their cables (i.e. the part between the connector and the tip of probe) must be placed 10cm or more away from the conducting surface or the probes must be placed perpendicularly to the conductor face.

3-48. A 4-terminal measurement is a method by which resistance is accurately measured by removing the effect of thermal emf and lead wire resistance. If a 4-terminal device is measured with the 4-terminal method (Figure 3-9, a), the reading of the indicating meter will be an Rx which is accurate. However, when measuring resistance by using only two terminals of a 4-terminal device (as shown in Figure 3-9, b) the meter will show the resistance of $R_X + 2R_e$. Thus an error of $2R_e/R_X$ results in this instance. If R_X is much larger than R_e ($R_X/R_e > 1000$), the error will be within specifications ($\pm 2\%$) even if measuring resistance with the method shown in Figure 3-9b.

3-49. CHANGING TEST LEAD LENGTH.

3-50. The values in Table 3-2 are given for wire lengths from the tip of test lead plug to the other end of lead wire, and are maxima for a single lead. Note that BOTH the resistance of lead wire AND the wire length must be kept within the values shown in Table 3-2 at the same time. Further it is recommended that the 4 lead wires be used in a bundle as far as is possible. The wire length and wire quality of the other two kinds of probes should not be changed.

Table 3-2. Maximum Values of Resistance and Length of Lead Wire

Range (ohms)	Lead Wire Resistance (ohms)	Lead Wire Length (cm)
0.001	0.002-0.02*	40
0.003	0 06	60
0.01	0.2	100
0.03	0.6	200
0.1	2	200
0.3	6	200
1	20	200
3	20	200
10	20	200
30	20	200
100	20	200

* Minimum to maximum value shown.

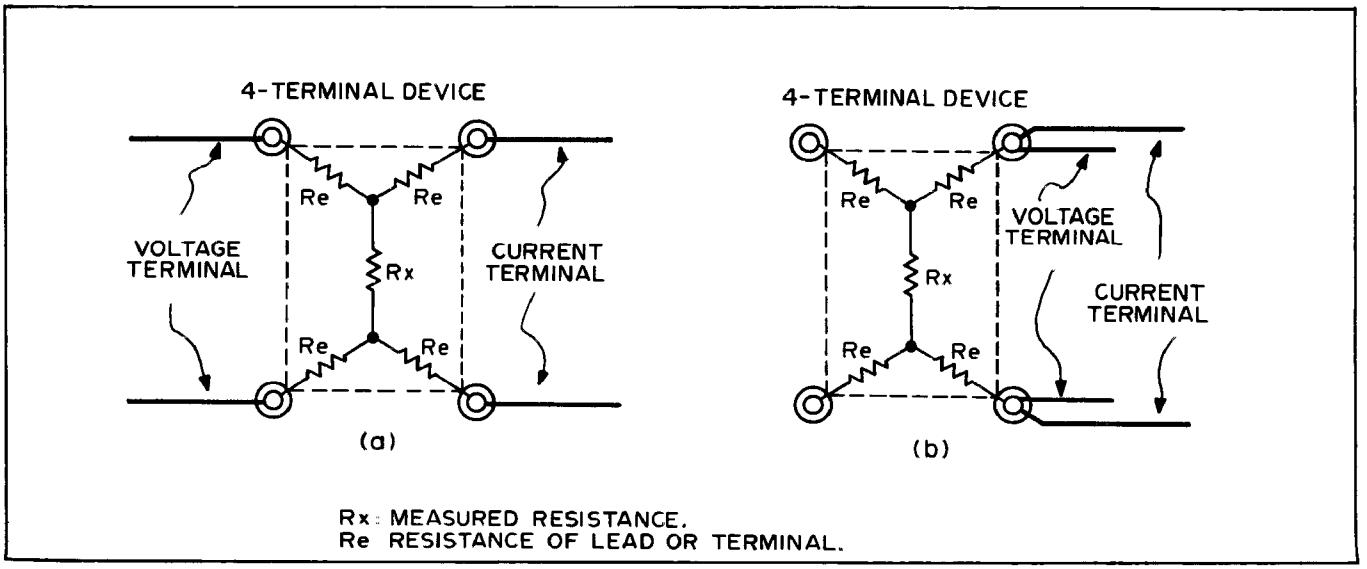

Figure 3-9. 4-Terminal Device Measurement

SECTION IV
THEORY OF OPERATION

4-1. INTRODUCTION

4-2. The measuring principle of Model 4328A is, as shown in Figure 4-1, the so-called 4-terminal method, where constant current i is applied to a sample R_X, and the voltage drop v_R is measured. If i is known, and resistance value R_X may be calibrated linearly on a voltmeter scale. By changing i, range changing is possible

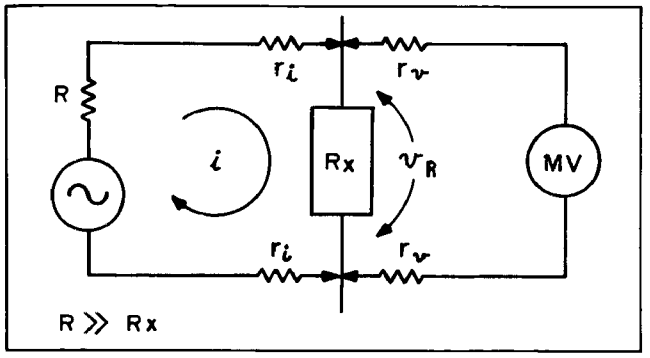

Figure 4-1. Basic Low Resistance Measurement

4-3. This method requires a total of 4 terminals to be connected to the ends of sample R_X, i.e., one voltage and one current terminal on each end. The set of current terminals applies constant current i to sample R_X, the voltage terminals detect the voltage drop across R_X. Using this method, the resistance of the lead wires, and the contact resistance between terminals and sample will not constitute any error. The effect of the resistance of voltage terminals r_V is removed by making the internal resistance of the voltmeter (MV) sufficiently greater than r_V. Resistance r_i of the current terminals can also be ignored, as it is normally sufficiently less than the internal resistance R of constant current source. In Model 4328A, the internal impedance as seen from voltage terminals is set at 5kΩ or higher, and the internal resistance of constant current source is set at RANGE x500.

4-4. SIMPLIFIED FUNCTIONAL DESCRIPTION

4-5. Functionally viewed, Model 4328A may be divided into two major sections. One is the 1kHz oscillator section serving as constant current source; and the other is a voltmeter section of the phase-discriminator type amplifying the voltage drop across the sample, synchronously rectifying it and deflecting the ohm-calibrated meter.

4-6. The following is a detailed description of operation of the 4328A refering to Figure 4-2, Model 4328A Block Diagram.

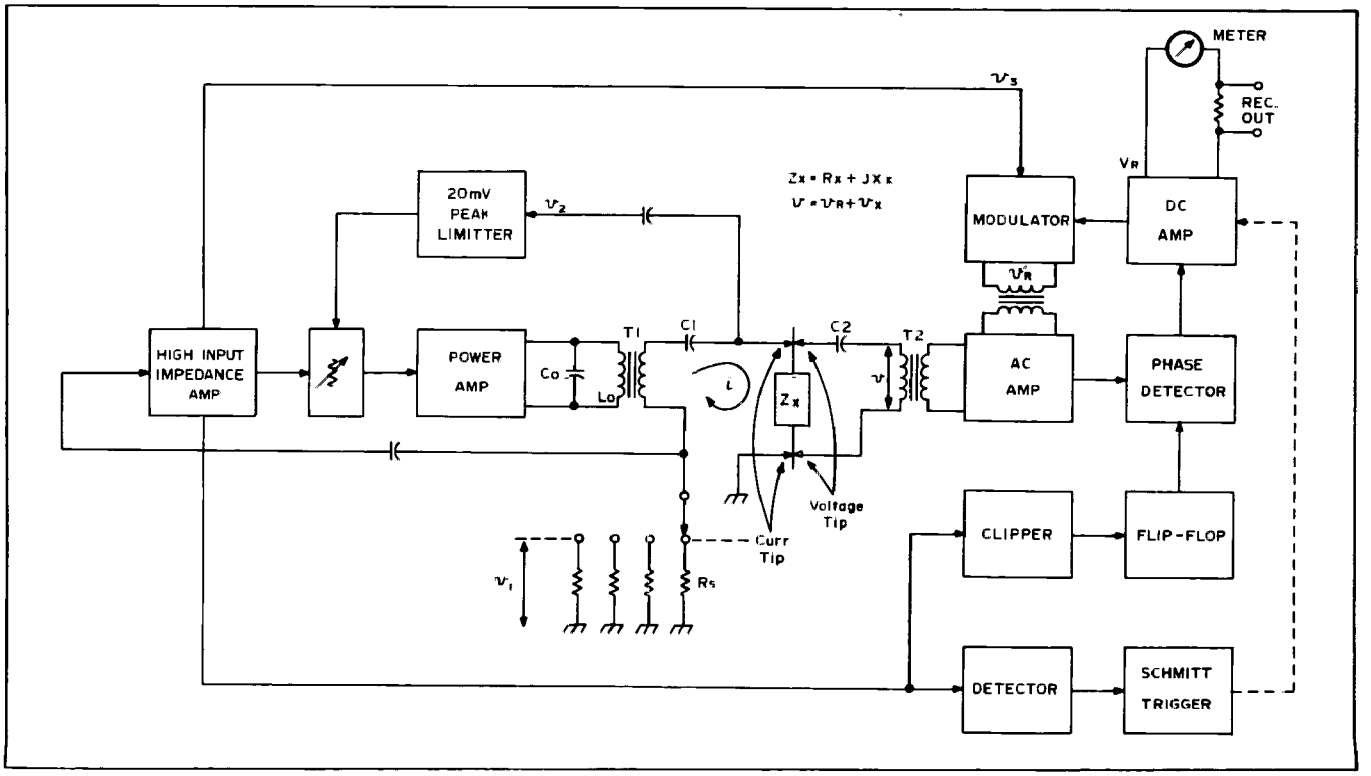

Figure 4-2. Simplified Block Diagram

4-7. OSCILLATOR CIRCUIT

4-8. Assuming that a sample with a resistance value R_X is connected between the current terminals only, a closed current loop is formed by Reference Resistance R_S of the instrument, R_X and secondary winding of Output Transformer T1. A positive feedback loop is formed as R_S is connected to the input terminal of High Input Impedance Amplifier, and through it to the Power Amplifier of the next stage and the Output Transformer T1. This loop will oscillate depending on the range setting (R_S value). The oscillation frequency, which is determined by capacity Co and inductance Lo of T1, is 1kHz ±100Hz.

4-9. The value of R_S is selected by RANGE switch, to be 500 times full scale RANGE value. This oscillator acts as a constant current source, as viewed from sample R_X. Also, the voltage v_1 at both ends of Reference Resistance R_S is always 100mV peak, thus, when the value of R_X is equal to full-scale value, the 1kHz voltage applied to R_X will be 0.2mV peak. In other words, the voltage applied to the sample is of a very low level, 0.2mV peak or lower, at normal measurement. The input impedance of High Input Impedance Amplifier is set sufficiently high so that R_S is unaffected by it.

4-10. Schmitt Trigger Circuit

4-11. When the value of sample R_X is greater than set range, or specifically, $R_S \geq R_X$, the loop gain of this positive feedback loop becomes 1 or smaller, so that oscillation stops. If the voltage terminals are connected to both ends of sample R_X at this time, the voltage drop at both ends of R_X is zero. A trigger circuit is added to cause the meter needle to read above full-scale whenever the value of R_X is greater than the set range. In other words, when the oscillator's power decreases to below a certain level, the Schmitt Trigger circuit provides a DC voltage to the DC Amplifier in the input stage of the Meter, causing it to deflect off-scale.

4-12. 20mV Peak Limiter

4-13. The 20mV peak Limiter connected to the current terminals limits the a.c. voltage applied to the sample to 20mV peak. It does this by comparing the 1kHz output level to a reference diode. When a given level is exceeded, the 1kHz signal is amplified and rectified and the resultant dc level is used to reduce the oscillator gain

4-14. PHASE SENSITIVE VOLTMETER

4-15. When the current terminals and the voltage terminals are connected to the sample R_X (It is assumed that the range-setting of 4328A at this time is correct), the voltage drop at both ends of R_X is applied to AC Amplifier via Input Transformer T2, where it is amplified. Its output is connected to the input of the Phase Detector. The other input of the Phase Detector is driven by a Flip-Flop driven by 1kHz from the oscillator section. That is, the output signal of the AC Amplifier is synchronously rectified by a voltage which is in-phase with the current flowing in the Reference Resistance R_S (i.e. current flowing in sample R_X). Thus, a sample $Z_X = R_X + jX_X$, the voltage drop across the sample will be $v = v_R + jv_X$. The input of the AC Amplifier will also be the voltage drop v_X whose phase differs from v_R by 90°. The Phase Detector detects only the voltage drop v_R which is in phase with the current in R_S and provides DC voltage output proportional to v_R only. Therefore, no error is present in the meter reading due to v_X, or effectively, the reactance X_X gives rise to no error.

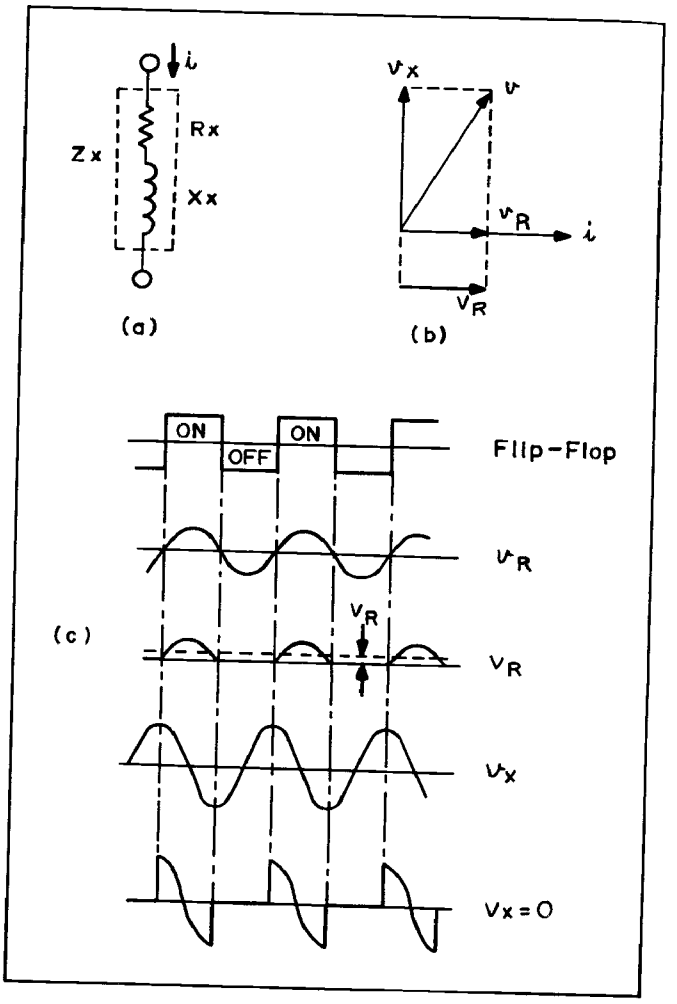

Figure 4-3. Operation of Phase Detector

4-16. The dynamic ranges of the AC Amplifier and Phase Detector of the next stage are sufficiently great that errors due to X_X will be less than 1% as long as the value of reactance X_X at 1kHz does not exceed twice the range setting. This is an important feature, especially with reference to AC measurement of low resistance wherein the series inductance component in the sample is a significant part of the total ac impedance.

4-17. DC signal V_R which was synchronously rectified by Phase Detector is amplified and applied to the Modulator of the next stage. This Modulator has two inputs and one output - an AC signal v_R corresponding to the product of V_R (proportional to the resistance value R_X) and the 1kHz AC signal v_3 (which is in phase with the current in R_S). The AC output signal v_R is

negatively fed back to the input of the AC Amplifier. Therefore, even if the oscillator's output should change, the meter indication will not budge. The voltage drop V_R across the sample changes, but V_3 also changes at the same rate. The relation $V_R = V'_R$ remains constant. Stable operation is obtained, as the entire circuit of this voltmeter section is incorporated within the negative feedback loop.

4-18. The output V_R of the DC amplifier is also applied to the Meter and Recorder terminals. V_R and V'_R are related linearly. The response of the Recorder output requires 0.6 second to reach 90% of the final reading. Recorder output is 0.1V at full scale.

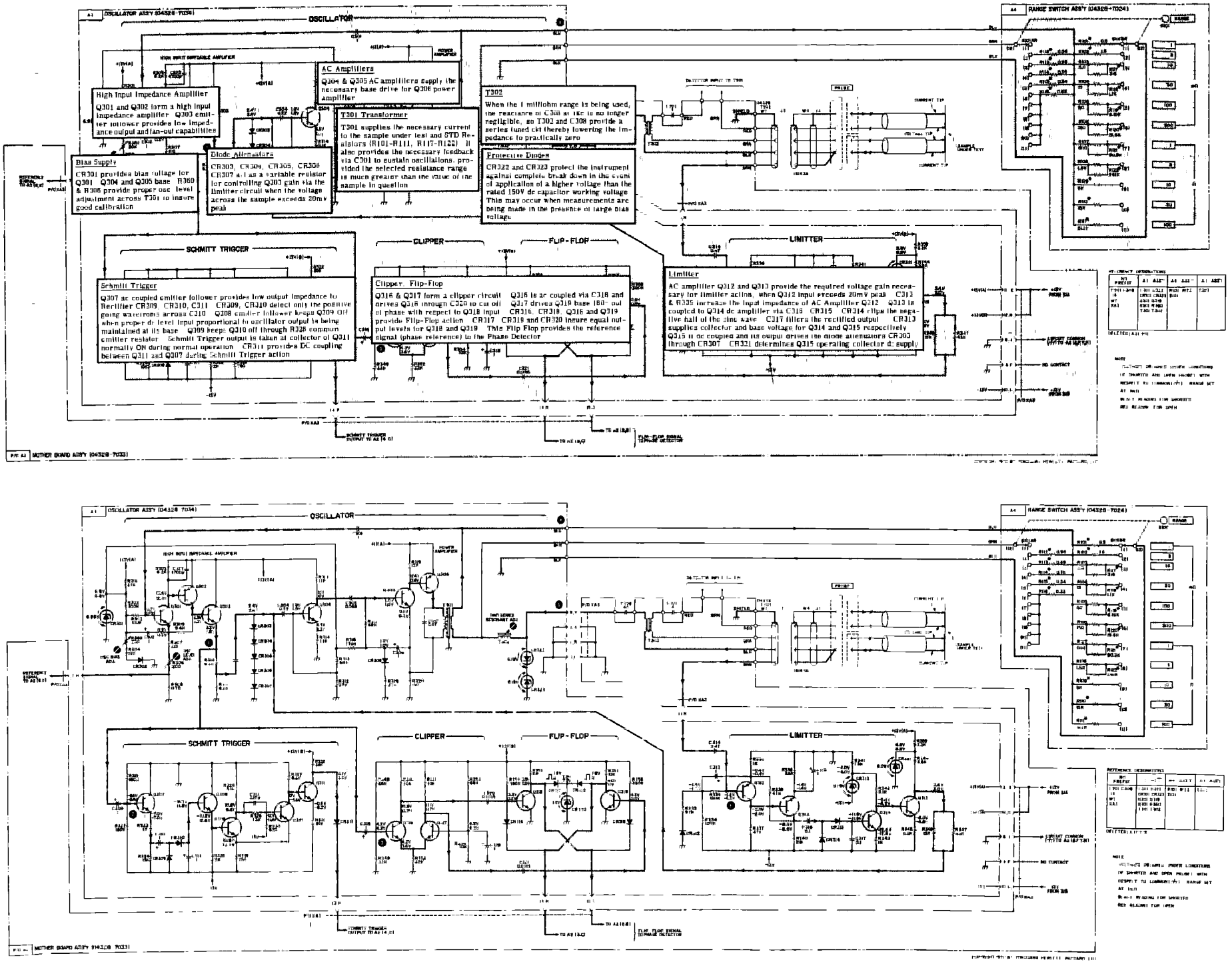

Figure 4-4. Model 4328A Oscillator Talking Schematic

SEE INSIDE

Figure 4-4

MODEL 4328A
OSCILLATOR TALKING SCHEMATIC

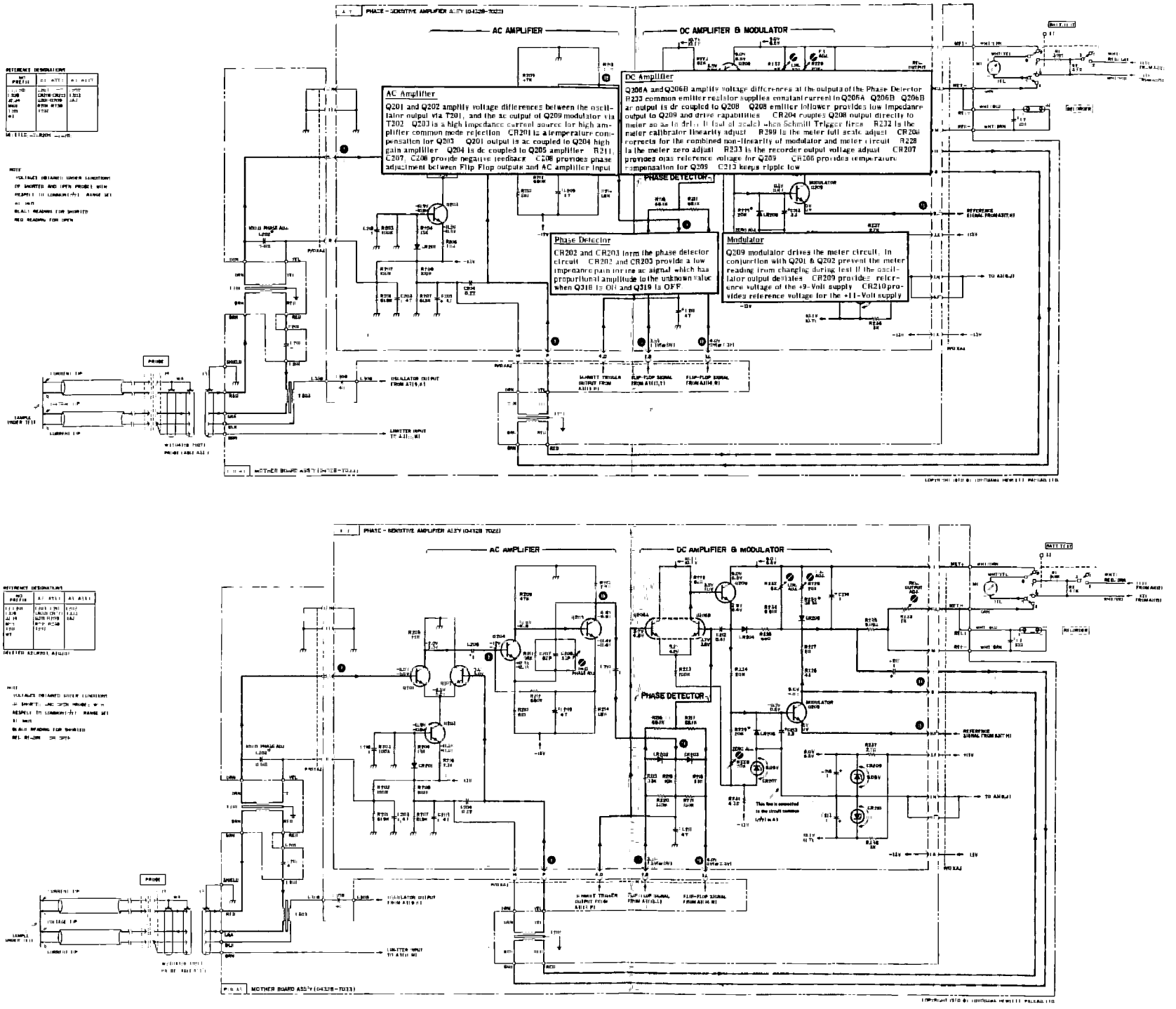

Figure 4-5 Model 4328A Phase-Sensitive Amplifier Talking Schematic

SEE INSIDE

Figure 4-5
MODEL 4328A PHASE - SENSITIVE
AMPLIFIER TALKING SCHEMATIC

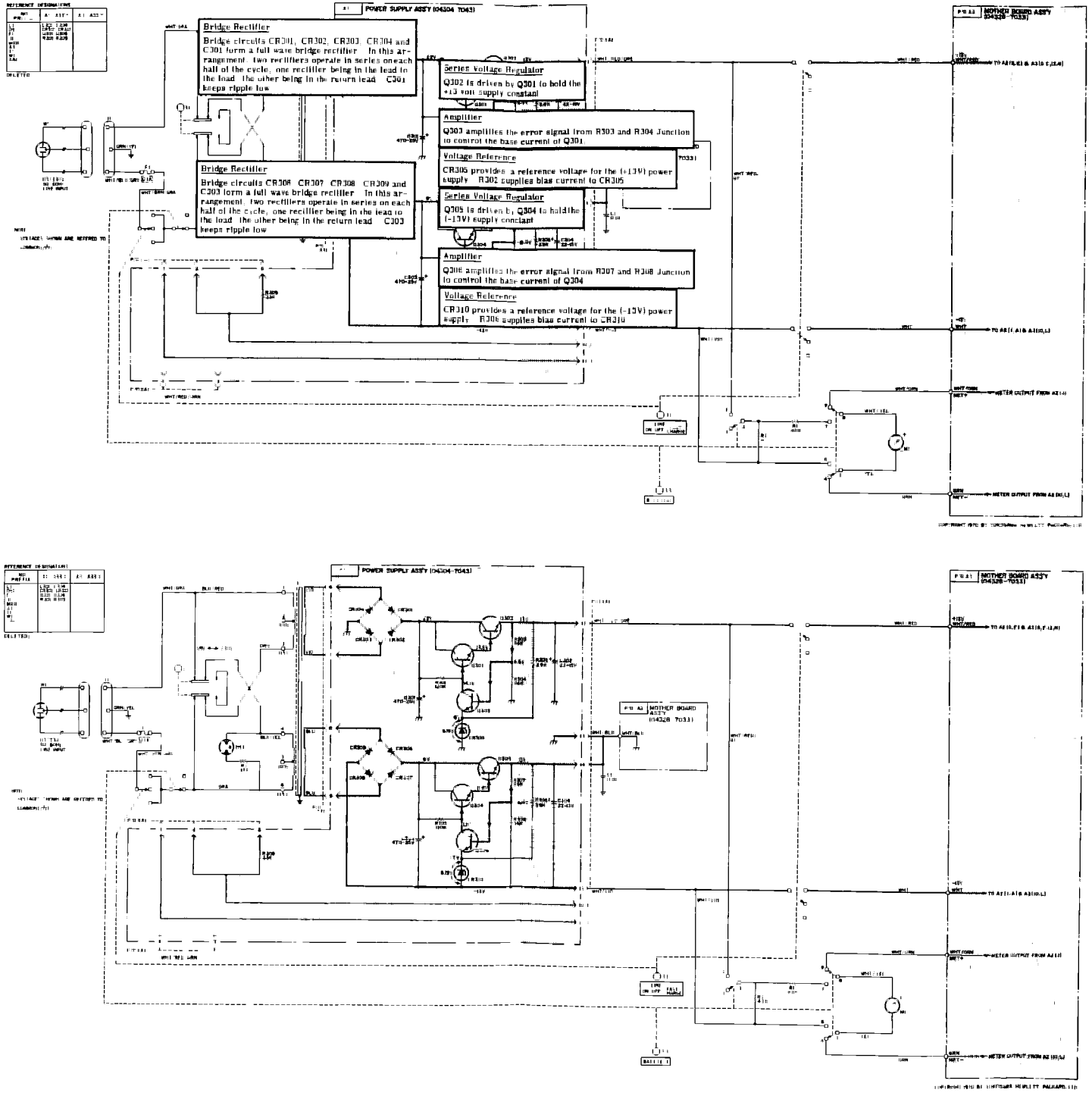

Figure 4-6. Model 4328A Power Supply Talking Schematic

SEE INSIDE

Figure 4-6

MODEL 4328A POWER
SUPPLY TALKING SCHEMATIC

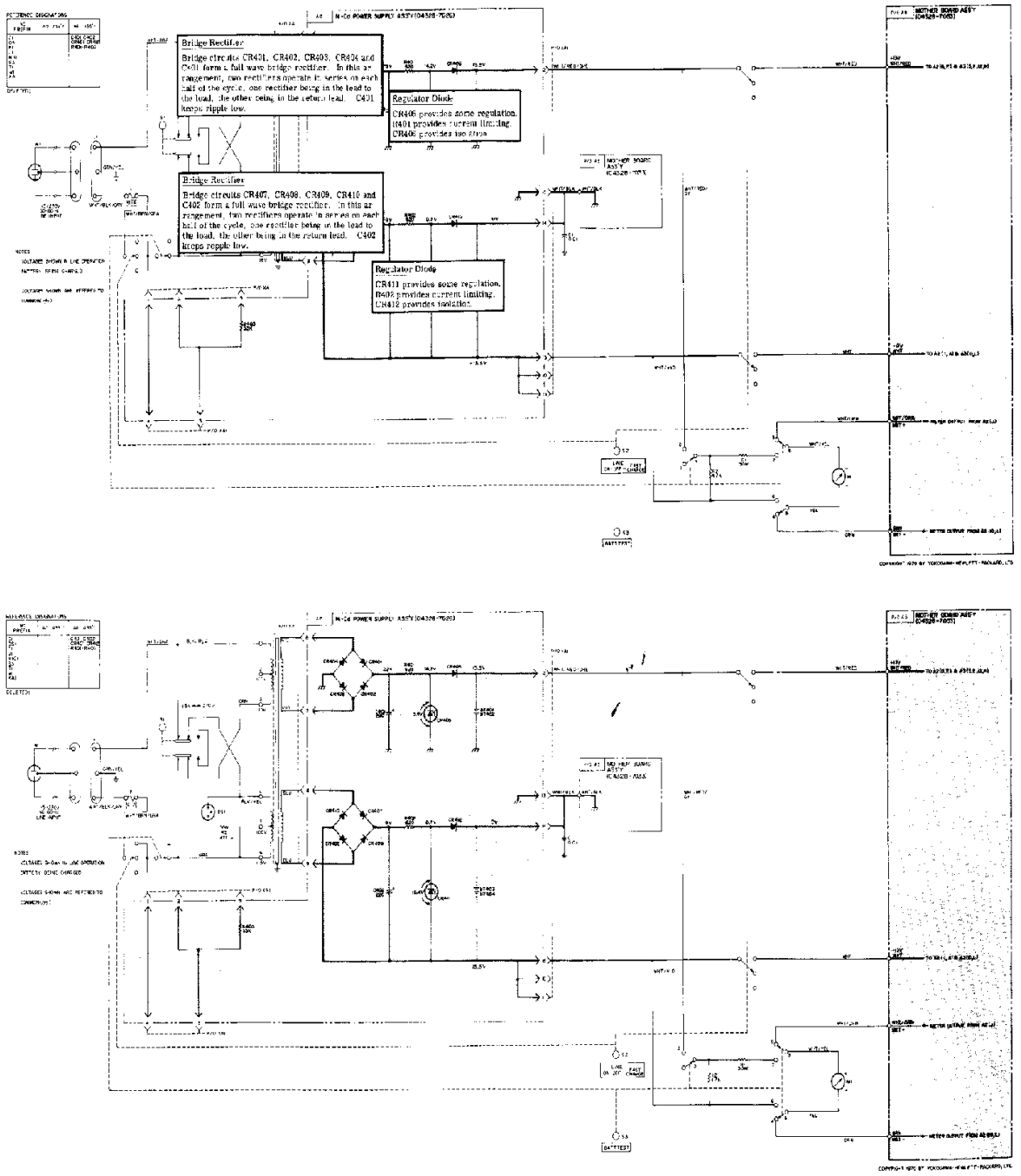

Figure 4-7. Model 4328A Ni-Cd Power Supply Talking Schematic

SEE INSIDE

Figure 4-7

MODEL 4328A Ni-Cd
POWER SUPPLY TALKING SCHEMATIC

SECTION V
MAINTENANCE

5-1. INTRODUCTION

5-2. This section outlines routine maintenance, performance checks, adjustments, calibration and troubleshooting for the 4328A Milliohmmeter. Performance checks may be used on incoming inspection to verify instrument specifications. The performance checks should also be used after any adjustments have been made.

5-3. CONTENT

5-4. PERFORMANCE CHECKS

5-5. The performance check procedures will verify Milliohmmeter performance during incoming inspection, periodic evaluation, calibration and troubleshooting. The tests can be performed without requiring removal of the access instrument case. Specifications in Table 1-1 are the performance standards. Should the Milliohmmeter fails to meet any of the performance test specifications, refer to the troubleshooting diagrams.

5-6. ADJUSTMENTS

5-7. The adjustment procedures describe the adjustments necessary to calibrate the Milliohmmeter. Adjust the Model 4328A only when it is determined that the instrument is actually out of adjustment, and not malfunctioning due to a circuit failure.

5-8. Several circuit components are factory-selected to meet specific circuit requirements. The factory selected parts are indicated on the schematic diagrams.

5-9. TEST EQUIPMENT

5-10. Instruments and accessories required for adjusting and testing the 4328A are listed and briefly described in Table 5-1. Instruments used to check 4328A performance must meet or exceed the specifications given.

Table 5-1. Recommended Test Equipment.

Instrument Type	Required Characteristics	Use	Recommended Model
Standard Resistor	0.001 to 100 ohms Accuracy : ±0.1%	Full scale checks and calibration	YEW Type 2782 or YEW Type 2792 and GR-1433-U Decade resistor
Decade Resistance Box	Range: 10 to 100 ohms Accuracy: ±0.1%	Tracking checks & calibration at 100Ω range	YEW Type 2786 or GR Model 1432T Decade Resistance Box
Ohm Meter	Range: 1Ω Accuracy: ±5%	Troubleshooting	HP Model 412A
Digital Voltmeter	Range: 0.1V Accuracy: ±0.2%	Troubleshooting	HP Model 3440A
DC Voltmeter	Range: 1 - 30V Accuracy: ±1%	Checks	HP Model 412A
Oscilloscope	Vert. Sens. 100μV/cm Sweep time 0.5 ms/cm	Checks and Troubleshooting	HP Model 180A Vert. Plug-in Model 1806A

5-11. MAINTENANCE

5-12. Service information in the form of trouble-shooting, waveforms, schematics and component locations are given in Section VIII. Also, an overall system block diagram is included which contains keyed numbers corresponding to the test points.

5-13. 4328A PERFORMANCE CHECKS

5-14. The performance checks presented here are front panel operations designed to compare the Model 4328A with its published specifications. These operations should be conducted before any attempt is made at instrument calibration or adjustment During performance tests, periodically vary the line voltage supplied to the Model 4328A, ±10% on either 115 or 230 V operation A 1/4 hour warm-up period should be allowed before these tests are conducted.

5-15. MECHANICAL METER ZERO.

5-16. If necessary, mechanically zero the meter movement as follows.

a. With instrument turned off, rotate meter adjustment screw clockwise until pointer approaches zero mark from the left.

b. Continue rotating clockwise until pointer coincides with zero mark. If pointer overshoots, continue rotating adjustment screw clockwise until pointer once again approaches zero mark from the left.

c. Rotate adjustment screw about three degrees counterclockwise to disengage it from the meter suspension

5-17. LINEARITY CHECK

a. Attach the Model 16005A probe to the 4328A and set the range switch to 100Ω.

b. Connect the Model 4328A probe to the Decade Resistance Box (YEW Type 2792 or GR Model 1432T).

c. Switch the Decade Resistor, providing 0 to 100Ω, in 10Ω steps.

d. The Model 4328A should read as shown in Table 5-2.

Table 5-2. Linearity Test

Standard Decade Resistor Settings	HP Model 4328A Meter Readings	HP Model 4328A Range Settings
0 Ω	0	
10	8 - 12	
20	18 - 22	
30	28 - 32	
40	38 - 42	
50	48 - 52	100 Ω
60	58 - 62	
70	68 - 72	
80	78 - 82	
90	88 - 92	
100	98 - 102	

5-18 FULL SCALE CHECK

a Attach the Model 16007A/B Test Lead to the Model 4328A.

b Connect the Test Leads to Standard Resistor of 0.001 to 100Ω and check the full scale readings of the Model 4328A. The Meter should read as shown in Table 5-3.

Table 5-3. Full Scale Test

Standard Resistor	HP Model 4328A Meter Readings	HP Model 4328A Range Settings
0.001 Ω	0.00098 - 0.00102 Ω	0.001 Ω
*(0.003	0.00294 - 0.00306	0.003)
0.01	0.0098 - 0.0102	0.01
0.03	0.0294 - 0.0306	0.03
0.1	0.098 - 0.102	0.1
0.3	0.294 - 0.306	0.3
1	0.98 - 1.02	1
3	2.94 - 3.06	3
10	9.80 - 10.2	10
30	29.4 - 30.6	30
100	98.0 - 102 0	100

* YEW TYPE 2872 only.

5-19. COVER REMOVAL AND REPLACEMENT

5-20. The side covers can be removed and replaced independently of the top and bottom covers. Each side cover is held in place by four screws retained by nuts which are fastened to the side frames.

5-21. TOP COVER REMOVAL

a. At the rear of the instrument, remove the screw that retains the cover.

b. Grasp the cover from the rear, and slide it back 1/2 inch. Then tilt forward edge of the cover upward and lift the cover from the instrument.

5-22 TOP COVER REPLACEMENT

a. Rest the cover flat on the cast guides projecting inward near the top of each side frame.

b. Slide the cover forward, allowing its forward edge to enter the groove in the front panel.

c. Replace the cover retaining screw.

5-23. BOTTOM COVER REMOVAL

a. Remove the retaining screw at the rear of the cover.

b. Swing the tilt stand out to free the cover.

c. Slide the cover rearward far enough to free the forward edge.

d. Tilt the forward edge of the cover upward and lift the cover from the instrument.

5-24. BOTTOM COVER REPLACEMENT

a. Set the tilt stand out of the way of the cover.

b. Rest the bottom cover flat on the cast guides projecting inward near the bottom of each side frame.

c. Slide the cover forward on the guides so that the formed portion at the rear of the cover slides over the two short projections at the rear corner of each side frame.

d. Replace the retaining screw.

5-25. ADJUSTMENT PROCEDURES

5-26. The following is a complete adjustment and calibration procedure for the Model 4328A. These operations should be conducted only if it has previously been established by PERFORMANCE TESTS, that the Model 4328A is out of adjustment. If the procedure outlined do not rectify any discrepancy that may exist, and all connections and setting have been rechecked, refer to TROUBLESHOOTING in Section VIII, for possible cause and recommended corrective action.

5-27. MECHANICAL METER ADJUSTMENT

a. When the meter is properly zero-set, the pointer rests over the zero mark on the meter scale when the instrument is:

(1) at normal operating temperature.

(2) in its normal operating position.

(3) turned off.

b. Set the pointer as follows to obtain best accuracy and mechanical stability:

(1) Turn instrument off.

(2) Rotate the meter mechanical adjustment screw clockwise until the meter pointer is to the left of zero and moving up the scale toward zero. Stop when the pointer is exactly over the zero mark. If the pointer overshoots, repeat step 2.

(3) When the pointer is exactly on zero, rotate the adjustment screw approximately 3 degrees counter-clockwise. This frees the adjustment screw from the meter suspension. If the pointer moves during this step, repeat steps 2 and 3.

5-28. DC POWER SUPPLY CHECK

5-29. Refer to Table 5-4 for Power Supply Check points and typical voltage values. Measure dc voltage between common and designated location on Mother-Board. Measure dc ±13V ac ripple with Oscilloscope (HP Model 140A). The peak value of ripple should not exceed 2mV.

Table 5-4. Power Supply Test

Voltage	Location on Mother-Board	Tolerance	Line Variation
+13V	WHT/RED	+12V-+14V	103V-127V
-13V	WHT	-12V--14V	

5-30. BIAS ADJUSTMENT

5-31. With the probe leads shorted adjust R360 so that Q302 collector voltage reads 3.7V to COMMON. This sets the bias on Q303 base Oscillator output transistor.

5-32. T302 ADJUSTMENT

a. Set the Model 4328A to 1mΩ Range with the probes shorted or 1mΩ across them.

b. Adjust T302 by turning top core cw or ccw for maximum peak reading. Output is taken at T301 terminals marked BLU and BLK.

5-33. OSCILLATOR OUTPUT ADJUSTMENT

a. Set the Model 4328A to 100Ω Range with the probes shorted.

b. Adjust R306 and R360, alternately, for a voltage of 200mVp-p at T301 terminals marked BLU and BLK (use HP Model 140A).

5-34. ELECTRICAL ZERO ADJUSTMENT

a. Set Model 4328A Range Switch to 100Ω.

b. Short the current probes and voltage probes to each other, for zero input.

c. Rotate R228 clockwise slowly and ascertain that the Meter pointer moves up scale, and then rotate counterclockwise until pointer reaches "just" zero.

5-35. LINEARITY ADJUSTMENT

a. Set Model 4328A Range Switch to 100Ω.

b. Put the Model 16005A Probes or 16007A/B Test Leads to the Model 4328A.

c. Connect the probes to Standard Decade Resistance Box YEW Type 2786 or GR Model 1432T.

d. Adjust the Decade Resistor to provide 30Ω, and adjust R232 so that the pointer indicates 30Ω.

e. Adjust the Decade Resistor to provide 100Ω, and adjust R229 so that the Meter indication is 100Ω.

f. Set Decade Resistor to provide 10 to 100Ω in order and check the tracking tolerance of Model 4328A. It should be ±0.5%.

g. If the tracking is out of tolerance, repeat d, e, and f.

5-36. FULL SCALE ADJUSTMENT

a. Attach the Model 16007A/B Test Leads to the Model 4328A.

b. Connect the Test Leads to Standard Resistor of 0.001 to 100Ω and check the full scale readings of the Model 4328A.

c. The Meter Readings should be within ±0.5% of full scale.

d. If the readings are off, values of R101 to R111 should slightly be changed for adjusting the full scale.

5-37. RECORDER OUTPUT ADJUSTMENT

a. Set the Model 4328A Range Switch to 100Ω and connect the probes to 100Ω Standard Resistor. Check the full scale reading of the Model 4328A.

b. Adjust A2R233 for the recorder output to be 100mV dc between terminals marked RECORDER on the rear panel.

c. Repeat Paragraphs 5-35, 36 and 37.

5-38. REACTANCE COMPONENT OFFSET ADJUSTMENT

a. Set the Model 4328A range to 1mΩ and measure an impedance of (R + jωL) as shown in Figure 5-2, where R should be calibrated by DC bridge and the reactance value twice that of R.

b. Adjust A2C208 as the error should come within ±1% relative to the calibrated value. A2C207 is changed to different values when A2C208 is out of range.

c Set the 4328A range to 3mΩ and check with Standard Resistor. If necessary adjust A4R102*, error should be within 1%.

TRANSISTOR BIASING

DEVICE	SYMBOL	CUT OFF	CONDUCTING
VACUUM TUBE	PLATE, GRID, CATHODE	+200V, -15V	+200V, -3V
N P N TRANSISTOR	COLLECTOR, BASE, EMITTER	+20V, 0V (OR-)	+20V, +.3V, MAIN CURRENT, CONTROL CURRENT
P N P TRANSISTOR	COLLECTOR, BASE, EMITTER	-20V, 0V (OR+)	-20V, -.3V, MAIN CURRENT, CONTROL CURRENT

Figure 5-1. Transistor Biasing Characteristics

d. All ranges should be checked with Standard Resistors and adjusted if necessary. A4R101*, 102*, 109*, 110*, 111*, and 117* through 122* are all factory selected.

e. Set the range to 100Ω and measure an impedance of (R + jωL) as shown in Figure 5-3, where R should be calibrated by DC bridge and the reactance value twice that of R.

f. Adjust C202 as the error should come within ±1% relative to the calibrated value (Note: C202 takes value from 0.015 - 0.025 μF).

g. Check again at 1mΩ range whether the error is in the above specification.

5-39. ISOLATING TROUBLE IN TRANSISTOR CIRCUITS

5-40. General. The following information should help determine is a transistor works. There are tests for both in-circuit and out-of-circuit transistors, which help to determine if a particular trouble is due to a faulty transistor or some other component. See Figure 5-1.

5-41. In-Circuit Testing. In transistor circuit testing the most important consideration is the transistor base-emitter junction. Like the control grid of a vacuum tube, this is the control point in the transistor.

5-42. To check a transistor, first see if the emitter-base diode is forward-biased by measuring the voltage difference between emitter and base. When using an electronic voltmeter, do not measure directly between emitter and base; there may be sufficient loop current between the voltmeter lead to damage the transistor. Instead, measure each voltage separately with respect to a voltage common point (e.g., chassis).

5-43. If the transistor base-emitter junction is forward-biased, the transistor conducts. If the diode is heavily forward-biased, the transistor saturates. However, if the base-emitter diode is reverse-biased, the transistor is cut off (open). The voltage drop across a forward-biased emitter-base junction varies with transistor collector current. A germanium transistor has a typical base-emitter voltage of 0.2 - 0.3 volt with 1 - 10mA collector current, and 0.4 - 0.5 volt with 10 - 100mA collector current. In contrast, base-emitter voltage for silicon transistors is about twice that for germanium types; about 0.5 - 0.6 volt for low collector current, and about 0.8 - 0.9 for high collector current.

5-44. If the emitter-base junctions forward-biased, check for amplifier action by short-circuiting base to emitter while observing collector voltage. The transistor should stop conduction (cut off, which should shift the collector voltage close to the supply voltage. Any difference is due to current leakage through the transistor. In general, the smaller the current, the better the transistor. If collector voltage does not change, the transistor has either an emitter-collector short circuit or emitter-base open circuit.

5-45. OUT-OF-CIRCUIT TESTING

5-46. The two common causes of transistor failure are internal short- and open-circuits. Remove the transistor from the circuit and use an ohmmeter to measure internal resistance. See Table 5-5 for measurement data.

5-47. COMPONENT REPLACEMENT IN ETCHED CIRCUITS

5-48. General. Etched circuit boards are sensitive to heat and to scratches with sharp objects. This is because the conductors are plated on to the circuit boards and the plating extends through the component mounting holes. Whenever possible, avoid unnecessary component substitution; it can damage the circuit board and adjacent components. See Table 5-7 for recommended tools and materials.

5-49. AXIAL-LEAD COMPONENTS

5-50. Resistors, tubular capacitors and other axial lead components can be replaced without unsoldering. Cut the component leads near the body of the defective component, remove the component and straighten the leads left in the board. Wrap leads of the replacement component one turn around the original leads, solder the connection, and clip off the excess lead.

5-51. OTHER COMPONENTS

5-52. Replace other components as follows:

a. Remove defective component from circuit board. Use a low-power soldering iron because excessive heat may lift a conductor or damage the board.

b. Remove solder from mounting holes with a suction device or a wooden toothpick. DO NOT USE A SHARP METAL OBJECT SUCH AS AN AWLORTWIST DRILL. SHARP OBJECTS MAY DAMAGE THE PLATED-THROUGH CONDUCTOR.

c. Shape the leads of the replacement component to match the mounting-hole spacing.

d. Insert the component leads in the mounting holes and position it as the original was. DO NOT FORCE LEADS OF REPLACEMENT COMPONENT INTO MOUNTING HOLES. A sharp edge on the lead may damage the plated-through conductor.

e. Solder the component in place and remove excess flux from the soldered areas. Apply a protective coating to prevent contamination and corrosion. See Table 5-7 for recommendations.

Table 5-5. Out-of-Circuit Transistor Resistance Measurements

Transistor Type		Connect Ohmmeter		Measure Resistance (ohms)
		Pos. lead to	Neg. lead to	
PNP Germanium	Small Signal	emitter	base*	200-250
		emitter	collector	10K-100K
	Power	emitter	base*	30-50
		emitter	collector	several hundred
PNP Silicon	Small Signal	emitter	base*	10K-100K
		emitter	collector	very high (might read open)
NPN Silicon	Small Signal	base	emitter	1K-3K
		collector	emitter	very high (might read open)
	Power	base	emitter	200-1000
		collector	emitter	high, often greater than 1M

* To test for transistor action, add collector-base short. Measured resistance should decrease.

CAUTION

Most ohmmeters can supply enough current or voltage to damage a transistor. Before using an ohmmeter to measure transistor forward or reverse resistance, check its open-circuit voltage and short-circuit current output ON THE RANGE TO BE USED. Open-circuit voltage must not exceed 1.5 volts and short-circuit current must be less than 3ma. See Table 5-6 for safe resistance ranges for some common ohmmeters.

Table 5-6. Safe Ohmmeter Range for Transistor Resistance Measurements

Ohmmeter	Safe Range(s)	Open Ckt Voltage	Open Ckt Current		
				Color	Polarity
HP 412A HP 427A	Rx1K	1.0V	1mA	Red Black	+ -
	Rx10K	1.0V	100μA		
	Rx100K	1.0V	10μA		
	Rx1M	1.0V	1μA		
	Rx10M	1.0V	0.1μA		
HP 410C	Rx1K	1.3V	0.57mA	Red Black	+ -
	Rx10K	1.3V	57μA		
	Rx100K	1.3V	5.7μA		
	Rx1M	1.3V	0.5μA		
	Rx10M	1.3V	0.05μA		
HP 410B	Rx100	1.1V	1.1mA	Black Red	+ -
	Rx1K	1.1V	110μA		
	Rx10K	1.1V	11μA		
	Rx100K	1.1V	1.1μA		
	Rx1M	1.1V	0.11μA		
Simpson 260	Rx100	1.5V	1mA	Red Black	+ -
Simpson 269	Rx1K	1.5V	0.82mA	Black Red	+ -
Triplett 630	Rx100	1.5V	3.25mA	Varies with Serial Number	
	Rx1K	1.5V	325μA		
Triplett 310	Rx10	1.5V	750μA		
	Rx100	1.5V	75μA		

Table 5-7. Etched Circuit Soldering Equipment

Item	Use	Specification	Item Recommended
Soldering Tool	Soldering Unsoldering	Wattage rating 37.5 Tip Temp: 750 - 800° F Tip Size: 1/8" OD	Ungar #776 Handle with Ungar #1237 Heating Unit
Soldering Tip, general purpose	Soldering Unsoldering	Shape: chisel Size 1/8"	Ungar #PL113
De-soldering aid	Unsoldering multi-connection components (e.g., tube sockets)	Suction device to remove molten solder from connection	Soldapult by the Edsyn Company, Arleta, California
Resin (flux) solvent	Remove excess flux from soldered area before application of protective coating	Must not dissolve etched circuit base board material or conductor bonding agent	Freon Acetone Lacquer Thinner Isopropy Alcohol (100% dry)
Solder	Component replacement Circuit board repair Wiring	Resin (flux) core, high tin content (60/40 tin/lead), 18 gauge (SWG) preferred	
Protective Coating	Contamination, corrosion protection after soldering	Good electrical insulation, corrosion-prevention properties	Krylon* #1302 Humiseal Protective Coating, Type 1B12 by Columbia Technical Corp. Woodside 77, New York
*Krylon Inc., Norristown, Pennsylvania			

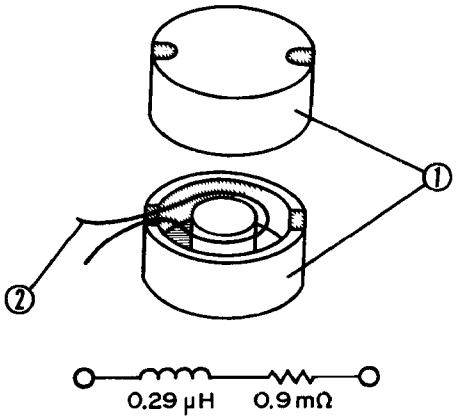

1. CORE 9170-0271
2. COIL (1.5mm$^{\phi}$ copper wire one turn)

Figure 5-2. (0.9mΩ + j1.8mΩ) Impedance

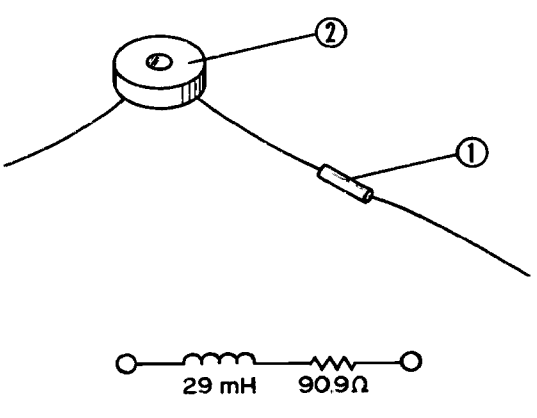

1. RESISTOR 0757-0399
2. INDUCTOR 9100-0761

Figure 5-3. (90Ω + j180Ω) Impedance

NOTES

SECTION VI
REPLACEABLE PARTS

6-1. INTRODUCTION

6-2. This section contains information for ordering replacement parts. Table 6-2 lists parts in alpha-numerical order of their reference designators and indicates the description (see Table 6-1 for abbreviations used) and -hp- stock number of each parts, together with any applicable notes.

6-3. Miscellaneous parts associated with each assembly are listed at the end of each assembly listing. Others are listed at the end of Table 6-2.

6-4. ORDERING INFORMATION

6-5. To obtain replacement parts, address order or inquiry to your local Hewlett-Packard Field Office (see lists at rear of this manual for addresses). Identify parts by their Hewlett-Packard stock numbers.

6-6. To obtain a part that is not listed, include:

a. Instrument model number.

b. Instrument serial number.

c. Description of the part.

d. Function and location of the part.

Table 6-1. List of Reference Designators and Abbreviations

REFERENCE DESIGNATORS

A = assembly	E = misc electronic part	P = plug	V = vacuum, tube, neon bulb, photocell, etc.
B = motor	F = fuse	Q = transistor	
BT = battery	FL = filter	R = resistor	VR = voltage regulator
C = capacitor	J = jack	RT = thermistor	W = cable
CP = coupler	K = relay	S = switch	X = socket
CR = diode	L = inductor	T = transformer	Y = crystal
DL = delay line	M = meter	TB = terminal board	
DS = device signaling (lamp)	MP = mechanical part	TP = test point	

ABBREVIATIONS

A = amperes	H = henries	NPN = negative-positive-negative	RMS = root-mean square
A.F.C. = automatic frequency control	HEX = hexagonal	NRFR = not recommended for field replacement	RWV = reverse working voltage
AMPL = amplifier	HG = mercury	NSR = not separately replaceable	S-B = slow-blow
B.F.O. = beat frequency oscillator	HR = hour(s)		SCR = screw
BE CU = beryllium copper	IF = intermediate freq		SE = selenium
BH = binder head	IMPG = impregnated		SECT = section(s)
BP = bandpass	INCD = incandescent	OBD = order by description	SEMICON = semiconductor
BRS = brass	INCL = include(s)	OH = oval head	SI = silicon
BWO = backward wave oscillator	INS = insulation(ed)	OX = oxide	SIL = silver
	INT = internal		SL = slide
CCW = counter-clockwise	K = kilo = 1000		SPG = spring
CER = ceramic		P = peak	SPL = special
CMO = cabinet mount only	LH = left hand	PC = printed circuit	SST = stainless steel
COEF = coefficient	LIN = linear taper	PF = picofarads = 10^{-12} farads	SR = split ring
COM = common	LK WASH = lock washer	PH BRZ = phosphor bronze	STL = steel
COMP = composition	LOG = logarithmic taper	PHL = Phillips	
COMPL = complete	LPF = low pass filter	PIV = peak inverse voltage	TA = tantalum
CONN = connector		PNP = positive-negative-positive	TD = time delay
CP = cadmium plate	M = milli = 10^{-3}	P/O = part of	TGL = toggle
CRT = cathode-ray tube	MEG = meg = 10^{6}	POLY = polystyrene	THD = thread
CW = clockwise	MET FLM = metal film	PORC = porcelain	TI = titanium
	MET OX = metallic oxide	POS = position(s)	TOL = tolerance
DEPC = deposited carbon	MFR = manufacturer	POT = potentiometer	TRIM = trimmer
DR = drive	MINAT = miniature	PP = peak-to-peak	TWT = traveling wave tube
	MOM = momentary	PT = point	
ELECT = electrolytic	MTG = mounting	PWV = peak working voltage	U = micro = 10^{-6}
ENCAP = encapsulated	MY = "mylar"		VAR = variable
EXT = external		RECT = rectifier	VDCW = dc working volts
	N = nano (10^{-9})	RF = radio frequency	W/ = with
F = farads	N/C = normally closed	RH = round head or right hand	W = watts
FH = flat head	NE = neon	RMO = rack mount only	WIV = working inverse voltage
FIL H = fillister head	NI PL = nickel plate		WW = wirewound
FXD = fixed	N/O = normally open		W/O = without
	NPO = negative positive zero (zero temperature coefficient)		
GE = germanium			
GL = glass			
GRD = ground(ed)			

Table 6-2, Reference Designation Index

Reference Designation	Stock No.	Description	Note

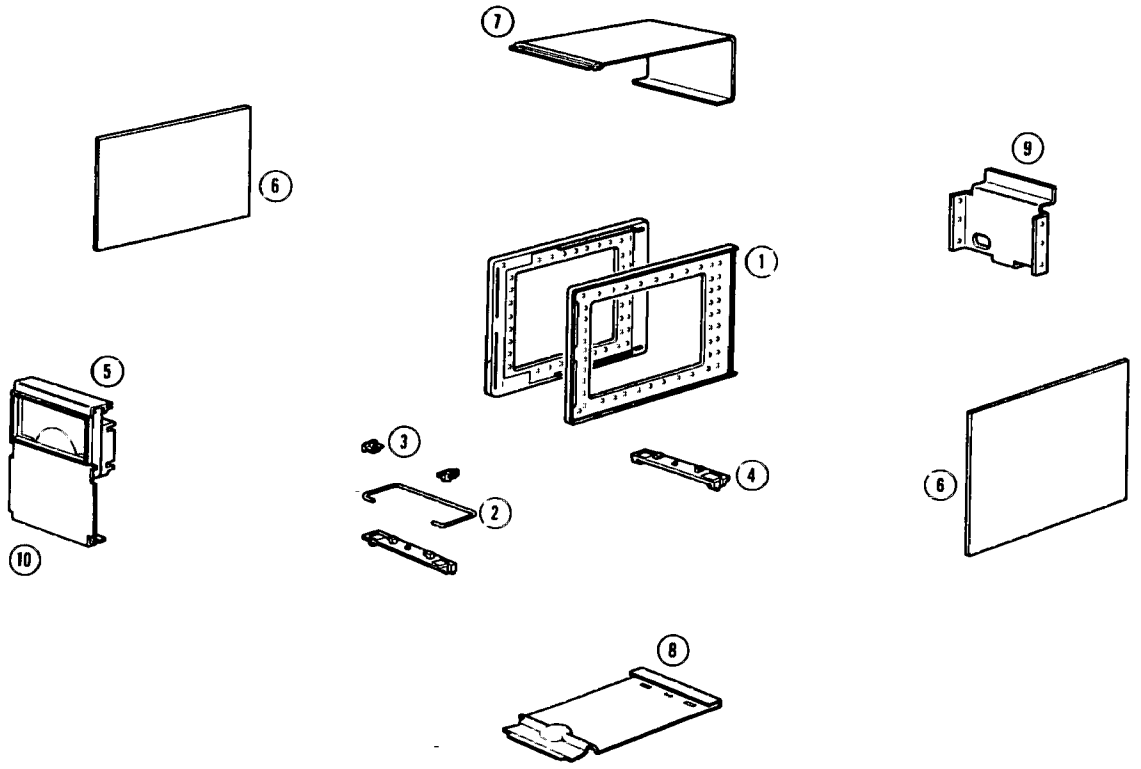

1.	5060-0703	FRAME ASSEMBLY
2.	1490-0031	STAND: TILT
3.	5040-0700	HINGE
4.	5060-0727	FOOT ASSEMBLY
5.	5020-6852	METER TRIM
6.	5000-8565	SIDE COVER
7.	5060-8549	COVER: TOP
8.	5000-8571	COVER: BOTTOM
9.	04328-1042	PANEL: REAR
10.	04328-10021	PANEL: FRONT

Table 6-2, Reference Designation Index

Reference Designation	Stock No.	Description	Note
A1	04304-7043 04304-8704	POWER SUPPLY ASS'Y AC POWER OPERATION ONLY BOARD: BLANK P.C.	
A1C1- A1C300		NOT ASSIGNED	
A1C301	0180-0967	C: FXD ALUM 470μF 25VDCW	
A1C302	0180-0756	C: FXD ALUM 22μF 16VDCW	
A1C303	0180-0967	C: FXD ALUM 470μF 25VDCW	
A1C304	0180-0756	C: FXD ALUM 22μF 16VDCW	
A1CR1- A1CR300		NOT ASSIGNED	
A1CR301	1901-0230	SEMICON DEVICE: DIODE SILICON 1S1625 600V 350mA	
A1CR302	1901-0230	SEMICON DEVICE: DIODE SILICON 1S1625 600V 350mA	
A1CR303	1901-0230	SEMICON DEVICE: DIODE SILICON 1S1625 600V 350mA	
A1CR304	1901-0230	SEMICON DEVICE: DIODE SILICON 1S1625 600V 350mA	
A1CR305	1902-0049	SEMICON DEVICE: DIODE BREAKDOWN 6.19V 400mW	
A1CR306	1901-0230	SEMICON DEVICE: DIODE SILICON 1S1625 600V 350mA	
A1CR307	1901-0230	SEMICON DEVICE: DIODE SILICON 1S1625 600V 350mA	
A1CR308	1901-0230	SEMICON DEVICE: DIODE SILICON 1S1625 600V 350mA	
A1CR309	1901-0230	SEMICON DEVICE: DIODE SILICON 1S1625 600V 350mA	
A1CR310	1902-0049	SEMICON DEVICE: DIODE BREAKDOWN 6.19V 400mW	
A1Q1- A1Q300		NOT ASSIGNED	
A1Q301	1854-0854	TRANSISTOR: NPN SILICON	
A1Q302	1854-0003	TRANSISTOR: NPN SILICON SIMILAR TO 2N1711	
A1Q303	1854-0854	TRANSISTOR: NPN SILICON	
A1Q304	1854-0854	TRANSISTOR: NPN SILICON	
A1Q305	1854-0003	TRANSISTOR: NPN SILICON SIMILAR TO 2N1711	
A1Q306	1854-0854	TRANSISTOR: NPN SILICON	
A1R1- A1R300		NOT ASSIGNED	
A1R301	0683-1245	R: FXD COMP 120kΩ 5% 1/4W	
A1R302	0683-3925	R: FXD COMP 3.9kΩ 5% 1/4W	
A1R303	0683-5635	R: FXD COMP 56kΩ 5% 1/4W	
A1R304	0683-5635	R: FXD COMP 56kΩ 5% 1/4W	
A1R305	0683-1245	R: FXD COMP 120kΩ 5% 1/4W	
A1R306	0683-3925	R: FXD COMP 3.9kΩ 5% 1/4W	
A1R307	0683-5635	R: FXD COMP 56kΩ 5% 1/4W	
A1R308	0683-5635	R: FXD COMP 56kΩ 5% 1/4W	
A1R309	0683-3335	R: FXD COMP 33kΩ 5% 1/4W	
		MISCELLANEOUS	
	5040-3304	HOLDER: CAPACITOR 2 REQ'D	

See list of abbreviations in introduction to this section

Table 6-2, Reference Designation Index (Cont'd)

Reference Designation	Stock No.	Description	Note
A2	04328-7022 04328-8702	PHASE SENSITIVE VOLTMETER ASS'Y BOARD: BLANK P.C.	
A2C1-A2C200		NOT ASSIGNED	
A2C201		NOT ASSIGNED	
A2C202		NOT ASSIGNED	
A2C203	0180-1031	C: FXD TANT 4.7μF 20% 15VDCW	
A2C204	0160-1548	C: FXD MY 0.22μF 10% 200VDCW	
A2C205	0180-1031	C: FXD TANT 4.7μF 20% 15VDCW	
A2C206	0180-1029	C: FXD TANT 1μF 20% 15VDCW	
A2C207*	0160-2204	C: FXD MICA 100pF 5% 300VDCW	
A2C208	0121-0215	C: VAR CER 7-45pF 350VDCW	
A2C209	0180-1031	C: FXD TANT 4.7μF 20% 15VDCW	
A2C210	0180-1029	C: FXD TANT 1μF 20% 15VDCW	
A2C211	0180-1031	C: FXD TANT 4.7μF 20% 15VDCW	
A2C212	0160-1554	C: FXD MY 0.47μF 10% 200VDCW	
A2C213	0180-0210	C: FXD TANT 3.3μF 20% 15VDCW	
A2C214	0180-1029	C: FXD TANT 1μF 20% 15VDCW	
A2C215	0180-1029	C: FXD TANT 1μF 20% 15VDCW	
A2C216	0180-1029	C: FXD TANT 1μF 20% 15VDCW	
A2C217	0180-1029	C: FXD TANT 1μF 20% 15VDCW	
A2C218	0160-0127	C: FXD CER 1μF 20% 25VDCW	
A2CR1-A2CR200		NOT ASSIGNED	
A2CR201	1901-0040	SEMICON DEVICE: DIODE SILICON	
A2CR202	1901-0040	SEMICON DEVICE: DIODE SILICON	
A2CR203	1901-0040	SEMICON DEVICE: DIODE SILICON	
A2CR204	1901-0040	SEMICON DEVICE: DIODE SILICON	
A2CR205		NOT ASSIGNED	
A2CR206	1901-0040	SEMICON DEVICE: DIODE SILICON	
A2CR207	1902-3150	SEMICON DEVICE: DIODE BREAKDOWN 9.09V 2% 400mW	
A2CR208	1901-0040	SEMICON DEVICE: DIODE SILICON	
A2CR209	1902-3150	SEMICON DEVICE: DIODE BREAKDOWN 9.09V 2% 400mW	
A2CR210	1902-3172	SEMICON DEVICE: DIODE BREAKDOWN 11V 2% 400mW	
A2Q1-A2Q200		NOT ASSIGNED	
A2Q201	1854-0854	TRANSISTOR: NPN SILICON	
A2Q202	1854-0854	TRANSISTOR: NPN SILICON	
A2Q203	1854-0854	TRANSISTOR: NPN SILICON	
A2Q204	1854-0854	TRANSISTOR: NPN SILICON	
A2Q205	1854-0854	TRANSISTOR: NPN SILICON	
A2Q206	1854-0221	TRANSISTOR: NPN SILICON PAIR	
A2Q207		NOT ASSIGNED	
A2Q208	1854-0854	TRANSISTOR: NPN SILICON	
A2Q209	1854-0854	TRANSISTOR: NPN SILICON	

See list of abbreviations in introduction to this section

Table 6-2, Reference Designation Index (Cont'd)

Reference Designation	Stock No.	Description	Note
A2R1-A2R200		NOT ASSIGNED	
A2R201	0757-0460	R: FXD MET FLM 61.9kΩ 1% 1/8W	
A2R202	0757-0465	R: FXD MET FLM 100kΩ 1% 1/8W	
A2R203	0683-1045	R: FXD COMP 100kΩ 5% 1/4W	
A2R204	0683-1335	R: FXD COMP 13kΩ 5% 1/4W	
A2R205	0683-2035	R: FXD COMP 20kΩ 5% 1/4W	
A2R206	0683-7525	R: FXD COMP 7500Ω 5% 1/4W	
A2R207	0757-0460	R: FXD MET FLM 61.9kΩ 1% 1/8W	
A2R208	0757-0465	R: FXD MET FLM 100kΩ 1% 1/8W	
A2R209	0683-4735	R: FXD COMP 47kΩ 5% 1, 4W	
A2R210	0683-5115	R: FXD COMP 510Ω 5% 1/4W	
A2R211	0683-5635	R: FXD COMP 56kΩ 5% 1/4W	
A2R212	0683-6845	R: FXD COMP 680kΩ 5% 1/4W	
A2R213	0683-7525	R: FXD COMP 7500Ω 5% 1/4W	
A2R214	0683-1825	R: FXD COMP 1800Ω 5% 1/4W	
A2R215	0757-0960	R: FXD MET FLM 33kΩ 2% 1/8W	
A2R216	0757-0461	R: FXD MET FLM 68.1kΩ 1% 1/8W	
A2R217	0757-0461	R: FXD MET FLM 68.1kΩ 1% 1/8W	
A2R218	0757-0960	R: FXD MET FLM 33kΩ 2% 1/8W	
A2R219	0683-1035	R: FXD COMP 10kΩ 5% 1/4W	
A2R220	0757-0465	R: FXD MET FLM 100kΩ 1% 1/8W	
A2R221	0757-0465	R FXD MET FLM 100kΩ 1% 1/8W	
A2R222	0683-8235	R: FXD COMP 82kΩ 5% 1/4W	
A2R223	0683-1045	R: FXD COMP 100kΩ 5% 1/4W	
A2R224	0683-2035	R: FXD COMP 20kΩ 5% 1 4W	
A2R225*	0698-3160	R: FXD 31.6kΩ 1% 1/8W	
A2R226	04328-8619	R: FXD W. W. 43Ω 5%	
A2R227	0683-2005	R: FXD COMP 20Ω 5% 1/4W	
A2R228	2100-0558	R: VAR 20kΩ 10% 1, 2W	
A2R229	2100-0558	R: VAR 20kΩ 10% 1/2W	
A2R230*	0698-3161	R: FXD 38.3kΩ 1% 1/8W	
A2R231	0683-4325	R: FXD COMP 4300Ω 5% 1/4W	
A2R232	2100-3252	R: VAR 5kΩ 10% 1/2W	
A2R233	2100-0567	R: VAR 2kΩ 10% 1/2W	
A2R234*	0757-0439	R: FXD 6.81kΩ 1% 1/8W	
A2R235	0757-0288	R: FXD MET FLM 9.09kΩ 1% 1/8W	
A2R236	0683-3025	R: FXD COMP 3kΩ 5% 1/4W	
A2R237	0683-2725	R: FXD COMP 2700Ω 5% 1/4W	
A2R238	0683-6815	R: FXD COMP 680Ω 5% 1/4W	

See list of abbreviations in introduction to this section

Table 6-2, Reference Designation Index (Cont'd)

Reference Designation	Stock No.	Description	Note
A3	04328-7034	OSCILLATOR ASS'Y	
	04328-8707	BOARD BLANK P.C.	
A3C1-A3C300		NOT ASSIGNED	
A3C301	0180-0978	C: FXD TANT 1μF 50VDCW	
A3C302	0180-1029	C: FXD TANT 1μF 20% 15VDCW	
A3C303	0160-1548	C: FXD MY 0.22μF 10% 200VDCW	
A3C304	0160-1548	C: FXD MY 0.22μF 10% 200VDCW	
A3C305	0170-0084	C: FXD MY 0.068μF 20% 50VDCW	
A3C306	0180-1029	C: FXD TANT 1μF 20% 15VDCW	
A3C307	0160-1554	C: FXD MY 0.47μF 10% 200VDCW	
A3C308		NOT ASSIGNED	
A3C309	0180-1029	C: FXD TANT 1μF 20% 15VDCW	
A3C310	0180-1029	C: FXD TANT 1μF 20% 15VDCW	
A3C311	0180-1029	C: FXD TANT 1μF 20% 15VDCW	
A3C312	0160-0134	C: FXD MICA 220pF 5% 300VDCW	
A3C313	0180-1029	C: FXD TANT 1μF 20% 15VDCW	
A3C314	0160-1563	C: FXD MY 0.47μF 5% 200VDCW	
A3C315	0180-1029	C: FXD TANT 1μF 20% 15VDCW	
A3C316	0150-0121	C: FXD CER 0.1μF -20+80% 50VDCW	
A3C317	0150-0121	C: FXD CER 0.1μF -20+80% 50VDCW	
A3C318	0160-0127	C: FXD CER 1μF 20% 25VDCW	
A3C319	0180-1029	C: FXD TANT 1μF 20% 15VDCW	
A3C320	0160-1542	C: FXD MY 1500pF 10% 100VDCW	
A3C321	0160-1542	C: FXD MY 1500pF 10% 100VDCW	
A3C322	0160-1544	C: FXD MY 4700pF 5% 100VDCW	
A3CR1-A3CR300		NOT ASSIGNED	
A3CR301	1902-3125	SEMICON DEVICE: DIODE BREAKDOWN 6.98V 2% 400mW	
A3CR302	1901-0040	SEMICON DEVICE: DIODE SILICON	
A3CR303	1901-0040	SEMICON DEVICE: DIODE SILICON	
A3CR304	1901-0040	SEMICON DEVICE: DIODE SILICON	
A3CR305	1901-0040	SEMICON DEVICE: DIODE SILICON	
A3CR306	1901-0040	SEMICON DEVICE: DIODE SILICON	
A3CR307	1901-0040	SEMICON DEVICE: DIODE SILICON	
A3CR308	1901-0040	SEMICON DEVICE: DIODE SILICON	
A3CR309	1910-0016	SEMICON DEVICE: DIODE GERMANIUM	
A3CR310	1910-0016	SEMICON DEVICE: DIODE GERMANIUM	
A3CR311	1901-0040	SEMICON DEVICE: DIODE SILICON	
A3CR312	1901-0040	SEMICON DEVICE: DIODE SILICON	
A3CR313	1902-3150	SEMICON DEVICE: DIODE BREAKDOWN 9.09V 2% 400mW	
A3CR314	1910-0016	SEMICON DEVICE: DIODE GERMANIUM	

Table 6-2, Reference Designation Index (Cont'd)

Reference Designation	Stock No.	Description	
A3CR315	1910-0016	SEMICON DEVICE: DIODE GERMANIUM	
A3CR316	1910-0016	SEMICON DEVICE: DIODE GERMANIUM	
A3CR317	1910-0016	SEMICON DEVICE: DIODE GERMANIUM	
A3CR318	1910-0016	SEMICON DEVICE: DIODE GERMANIUM	
A3CR319	1910-0016	SEMICON DEVICE: DIODE GERMANIUM	
A3CR320	1902-3129	SEMICON DEVICE: DIODE BREAKDOWN 7.5V 2% 400mW	
A3CR321	1902-3150	SEMICON DEVICE: DIODE BREAKDOWN 9.09V 2% 400mW	
A3CR322	1902-0559	SEMICON DEVICE: DIODE BREAKDOWN 6.19V 2% 1W	
A3CR323	1902-0559	SEMICON DEVICE: DIODE BREAKDOWN 6.19V 2% 1W	
A3Q1-A3Q300		NOT ASSIGNED	
A3Q301	1854-0854	TRANSISTOR: SILICON	
A3Q302	1853-0010	TRANSISTOR: PNP SILICON	
A3Q303	1854-0854	TRANSISTOR: SILICON	
A3Q304	1854-0854	TRANSISTOR: SILICON	
A3Q305	1854-0854	TRANSISTOR: SILICON	
A3Q306	1853-0010	TRANSISTOR: PNP SILICON	
A3Q307	1854-0854	TRANSISTOR: SILICON	
A3Q308	1854-0854	TRANSISTOR: SILICON	
A3Q309	1854-0854	TRANSISTOR: SILICON	
A3Q310	1854-0854	TRANSISTOR: SILICON	
A3Q311	1854-0854	TRANSISTOR: SILICON	
A3Q312	1853-0071	TRANSISTOR: SILICON	
A3Q313	1853-0071	TRANSISTOR: SILICON	
A3Q314	1854-0854	TRANSISTOR: SILICON	
A3Q315	1854-0854	TRANSISTOR: SILICON	
A3Q316	1854-0854	TRANSISTOR: SILICON	
A3Q317	1854-0854	TRANSISTOR: SILICON	
A3Q318	1854-0854	TRANSISTOR: SILICON	
A3Q319	1854-0854	TRANSISTOR: SILICON	
A3R1-A3R300		NOT ASSIGNED	
A3R301	0683-2735	R: FXD COMP 27kΩ 5% 1/4W	
A3R302	0683-3045	R: FXD COMP 300kΩ 5% 1/4W	
A3R303	0683-1045	R: FXD COMP 100kΩ 5% 1/4W	
A3R304	0683-1035	R: FXD COMP 10kΩ 5% 1/4W	
A3R305	0683-6225	R: FXD COMP 6.2kΩ 5% 1/4W	
A3R306	2100-3212	R: VAR 200Ω 10% 1/2W	
A3R307	0698-3441	R: FXD MET FLM 215Ω 1% 1/8W	
A3R308	04328-8613	R: FXD W.W. 750mΩ 2%	
A3R309	0683-5625	R: FXD COMP 5600Ω 5% 1/4W	
A3R310	0683-6225	R: FXD COMP 6.2kΩ 5% 1/4W	
A3R311	0683-6225	R: FXD COMP 6.2kΩ 5% 1/4W	
A3R312	0683-2735	R: FXD COMP 27kΩ 5% 1/4W	
A3R313	0683-1235	R: FXD COMP 12kΩ 5% 1/4W	
A3R314	0683-5125	R: FXD COMP 5.1kΩ 5% 1/4W	

See list of abbreviations in introduction to this section

Table 6-2, Reference Designation Index (Cont'd)

Reference Designation	Stock No.	Description	Note
A3R315	0683-6835	R: FXD COMP 68kΩ 5% 1/4W	
A3R316	0683-2745	R: FXD COMP 270kΩ 5% 1/4W	
A3R317	0683-6835	R: FXD COMP 68kΩ 5% 1/4W	
A3R318	0683-2735	R: FXD COMP 27kΩ 5% 1/4W	
A3R319	0683-1235	R: FXD COMP 12kΩ 5% 1/4W	
A3R320	0683-1315	R: FXD COMP 130Ω 5% 1/4W	
A3R321	0683-1845	R: FXD COMP 180kΩ 5% 1/4W	
A3R322	0683-1845	R: FXD COMP 180kΩ 5% 1/4W	
A3R323	0683-1025	R: FXD COMP 1kΩ 5% 1/4W	
A3R324	0683-1535	R: FXD COMP 15kΩ 5% 1/4W	
A3R325	0683-2025	R: FXD COMP 2kΩ 5% 1/4W	
A3R326	0683-5125	R: FXD COMP 5100Ω 5% 1/4W	
A3R327	0683-8225	R: FXD COMP 8200Ω 5% 1/4W	
A3R328	0683-7515	R: FXD COMP 750Ω 5% 1/4W	
A3R329	0683-1325	R: FXD COMP 1300Ω 5% 1/4W	
A3R330	0683-6215	R: FXD COMP 620Ω 5% 1/4W	
A3R331	0683-3935	R: FXD COMP 39kΩ 5% 1/4W	
A3R332	0683-3935	R: FXD COMP 39kΩ 5% 1/4W	
A3R333	0683-9125	R: FXD COMP 9.1kΩ 5% 1/4W	
A3R334	0683-1245	R: FXD COMP 120kΩ 5% 1/4W	
A3R335	0683-1545	R: FXD COMP 150kΩ 5% 1/4W	
A3R336	0683-1025	R: FXD COMP 1000Ω 5% 1/4W	
A3R337	0683-4735	R: FXD COMP 47kΩ 5% 1/4W	
A3R338	0683-4735	R FXD COMP 47kΩ 5% 1/4W	
A3R339	0683-3625	R. FXD COMP 3600Ω 5% 1/4W	
A3R340	0683-1035	R: FXD COMP 10kΩ 5% 1/4W	
A3R341	0683-1325	R: FXD COMP 1300Ω 5% 1/4W	
A3R342	0683-5125	R: FXD COMP 5.1kΩ 5% 1/4W	
A3R343	0683-1025	R: FXD COMP 1000Ω 5% 1/4W	
A3R344	0683-3625	R: FXD COMP 3.6kΩ 5% 1/4W	
A3R345	0683-5625	R: FXD COMP 5600Ω 5% 1/4W	
A3R346	0683-1535	R: FXD COMP 15kΩ 5% 1/4W	
A3R347	0683-4335	R: FXD COMP 43kΩ 5% 1/4W	
A3R348	0757-0968	R: FXD MET FLM 68kΩ 2% 1/8W	
A3R349	0757-0960	R: FXD MET FLM 33kΩ 2% 1/8W	
A3R350	0683-2035	R: FXD COMP 20kΩ 5% 1/4W	
A3R351	0683-2035	R: FXD COMP 20kΩ 5% 1/4W	
A3R352	0683-2235	R: FXD COMP 22kΩ 5% 1/4W	
A3R353	0757-0968	R: FXD MET FLM 68kΩ 2% 1/8W	
A3R354	0757-0960	R: FXD MET FLM 33kΩ 2% 1/8W	
A3R355	0683-3945	R: FXD COMP 390kΩ 5% 1/4W	
A3R356	0683-1035	R: FXD COMP 10kΩ 5% 1/4W	
A3R357	0683-1035	R: FXD COMP 10kΩ 5% 1/4W	
A3R358	0683-3945	R: FXD COMP 390kΩ 5% 1/4W	
A3R359	0683-2225	R: FXD COMP 2.2kΩ 5% 1/4W	
A3R360	2100-0558	R: VAR 20kΩ 10% 1/2W	

See list of abbreviations in introduction to this section

Table 6-2. Reference Designation Index (Cont'd)

Reference Designation	Stock No.	Description	Note
A3T1-A3T300		NOT ASSIGNED	
A3T301	04328-7030	TRANSFORMER:OSC	
A3T302	04328-7032	TRANSFORMER:	
A4	04328-7024	RANGE SWITCH ASS'Y	
A4R1-A4R100		NOT ASSIGNED	
A4R101*	04328-8606	R:FXD W.W. 0.5Ω 0.1%	
A4R102*	04328-8626	R:FXD W.W. 1.477Ω 0.1%	
A4R103	04328-8627	R:FXD W.W. 4.94Ω 0.1%	
A4R104	04328-8628	R:FXD W.W. 14.85Ω 0.1%	
A4R105	04328-8629	R:FXD W.W. 49.6Ω 0.1%	
A4R106	04328-8630	R:FXD W.W. 148.8Ω 0.1%	
A4R107	04328-8631	R:FXD W.W. 497.1Ω 0.1%	
A4R108	0698-2125	R:FXD MET FLM 1.492kΩ 0.1% 1 4W	
A4R109*	0698-1466	R FXD MET FLM 5kΩ 0.1% 1 4W	
A4R110*	0698-2126	R FXD MET FLM 14.11kΩ 0.1% 1 4W	
A4R111	0698-2042	R.FXD MET FLM 51.1kΩ 0.1% 1/4W	
A4R112*	04328-8621	R:FXD W.W. 560mΩ 1%	
A4R113*	04328-8622	R:FXD W.W. 390mΩ 1%	
A4R114*	04328-8623	R:FXD W.W. 350mΩ 1%	
A4R115*	04328-8624	R:FXD W.W. 340mΩ 1%	
A4R116*	04328-8625	R:FXD W.W. 330mΩ 1%	
A4R117*	0698-3444	R:FXD MET FLM 316Ω 1% 1/8W	
A4R118*	0757-0426	R:FXD MET FLM 1.10kΩ 1% 1/8W	
A4R119*	0757-0290	R:FXD MET FLM 6.19kΩ 1% 1/8W	
A4R120*	0698-3157	R:FXD MET FLM 19.6kΩ 1% 1/8W	
A4R121*	0757-0464	R:FXD MET FLM 90.9kΩ 1% 1/8W	
A4R122*	0698-3455	R:FXD MET FLM 261kΩ 1% 1/8W	
A4R123*	0698-3444	R: FXD 316Ω 1% 1/8W	
A4S1-A4S100		NOT ASSIGNED	
A4S101	3100-1173	SWITCH:RANGE ROTARY	

See list of abbreviations in introduction to this section

Table 6-2, Reference Designation Index (Cont'd)

Reference Designation	Stock No.	Description	Note
A5	04328-7033 04328-8708	MOTHER BOARD BOARD BLANK P.C.	
A5C1- A5C201 A5C202*	 0160-1550	NOT ASSIGNED C: FXD MY 0.015μF 10% 100VDCW	
A5T1- A5T302 A5T303	 04328-7031	NOT ASSIGNED TRANSFORMER	
A5XA1 A5XA2 A5XA3	 1251-1886 1251-1886	NOT ASSIGNED CONNECTOR: PRINTED CIRCUIT 15 CONTACTS CONNECTOR: PRINTED CIRCUIT 15 CONTACTS	
A6	04328-7026 04328-8706	POWER SUPPLY: RECHARGEABLE BATTERY OPERATION ONLY BOARD, BLANK P.C.	
A6BT1- A6BT400 A6BT401 A6BT402 A6BT403 A6BT404	 1420-0274 1420-0274 1420-0274 1420-0274	NOT ASSIGNED BATTERY: 6V .225A-HR HG SLDR-TAB BATTERY: 6V .225A-HR HG SLDR-TAB BATTERY: 6V .225A-HR HG SLDR-TAB BATTERY: 6V .225A-HR HG SLDR-TAB	
A6C1- A6C400 A6C401 A6C402	 0180-0965 0180-0965	NOT ASSIGNED C: FXD ALUM 220μF 25VDCW C: FXD ALUM 220μF 25VDCW	
A6CR1- A6CR400 A6CR401 A6CR402 A6CR403 A6CR404 A6CR405 A6CR406 A6CR407 A6CR408 A6CR409 A6CR410 A6CR411 A6CR412	 1901-0230 1901-0230 1901-0230 1901-0230 1902-3208 1901-0040 1901-0230 1901-0230 1901-0230 1901-0230 1902-3208 1901-0040	NOT ASSIGNED SEMICON DEVICE: DIODE SILICON 1S1625 600V 350mA SEMICON DEVICE: DIODE SILICON 1S1625 600V 350mA SEMICON DEVICE: DIODE SILICON 1S1625 600V 350mA SEMICON DEVICE: DIODE SILICON 1S1625 600V 350mA SEMICON DEVICE: DIODE BREAKDOWN 15.4V 5% 400mW SEMICON DEVICE: DIODE SILICON SEMICON DEVICE: DIODE SILICON 1S1625 600V 350mA SEMICON DEVICE: DIODE SILICON 1S1625 600V 350mA SEMICON DEVICE: DIODE SILICON 1S1625 600V 350mA SEMICON DEVICE: DIODE SILICON 1S1625 600V 350mA SEMICON DEVICE: DIODE BREAKDOWN 15.4V 5% 400mW SEMICON DEVICE: DIODE SILICON	

See list of abbreviations in introduction to this section

Table 6-2, Reference Designation Index (Cont'd)

Reference Designation	Stock No.	Description	Note
A6R1 - A6R400		NOT ASSIGNED	
A6R401	0683-6215	R:FXD COMP 620Ω 5% 1/4W	
A6R402	0683-6215	R:RXD COMP 620Ω 5% 1/4W	
A6R403	0683-3335	R:FXD COMP 33kΩ 5% 1/4W	
		MISCELLANEOUS	
	5040-0615	HOLDER:BATTERY 2 REQ'D	
C1	0160-1235	C:FXD MY 0.01μF 10% 600VDCW	
C2	0180-0934	C:FXD TANT 100μF 20% 10VDCW	
C3-C200		NOT ASSIGNED	
C201	0160-1561	C:FXD MET PAPER 4μF 10% 150VDCW	
C202-C307		NOT ASSIGNED	
C308	0160-1562	C:FXD MET PAPER 40μF 10% 150VDCW	
DS1	1450-0566	LAMP:INDICATOR	
F1	2110-0110	FUSE:CARTRIDGE 0.1A SLOW-BLOW	
J1	1251-2357	CONNECTOR:POWER 3 PIN MALE	
J2	04260-5028	CONNECTOR:FOR RECORDER	
J3	04260-5028	CONNECTOR:FOR GROUND	
J4		CONNECTOR:PROBE NOT SEPARATELY REPLACEABLE PART OF W2 PROBE CABLE ASS'Y.	
J5	1250-0318	CONNECTOR:FOR PROBE	
M1	1120-0751	METER	
R1	0757-0476	R:FXD MET FLM 301kΩ 1% 1/8W	
R2	0683-4725	R:FXD COMP 4.7kΩ 5% 1/4W	
R3	0683-4735	R:FXD COMP 47kΩ 5% .25w	
S1	3101-0033	SWITCH:SLIDE DPDT FOR 115/230	
S2	3101-0272	SWITCH:TOGGLE ON-OFF-ON	
S3	3101-0273	SWITCH:PUSH BUTTON BATT TEST	
	3101-0274	KNOB:FOR S2	
	3101-0275	BRACKET FOR S2	

See list of abbreviations in introduction to this section

Table 6-2, Reference Designation Index (Cont'd)

Reference Designation	Stock No.	Description	Note
T1	9100-0735	TRANSFORMER: POWER	
T2-T200		NOT ASSIGNED	
T201	04328-7029	TRANSFORMER: INPUT	
T202	04328-7028	TRANSFORMER: INPUT	
W1	8120-1378	CABLE ASS'Y: POWER	
	1251-0048	ADAPTER: THREE-PRONG TO TWO-PRONG	
W2	04328-7203	CABLE ASS'Y PROBE	
	04328-7202	CABLE ASS'Y	
XA1	1251-0135	CONNECTOR:PRINTED CKT:5 CONTACTS.	
XF1	1400-0084	HOLDER: FUSE	
W4	16143A	PROBE CABLE	
		PROBE ASSEMBLIES	
	16005A	PROBE: CLIP TYPE, TWO FURNISHED	
	16006A	PROBE: PIN TYPE, TWO FURNISHED	
	16007A	TEST LEAD: ALLIGATOR CLIP RED	
	16007B	TEST LEAD: ALLIGATOR CLIP BLACK	
		MISCELLANEOUS	
	0370-0254	KNOB: SKIRTED BAR D3/4" BLK.	

See list of abbreviations in introduction to this section

SECTION VII
MANUAL CHANGES AND OPTIONS

7-1. OPTIONS

7-2 Options are standard modifications performed on -hp- instruments at the factory. Model 4328A Option 001 rechargeable battery operation is available.

7-3. SPECIAL INSTRUMENTS

7-4. "Specials" are standard -hp- instruments that are modified according to customer specifications. A separate insert sheet is included with the manual for special instruments having electrical changes. Make the changes specified in addition to any other changes that are necessary.

7-5. MANUAL CHANGES

7-6. This manual applies directly to the Model 4328A with serials 1828J05711 and above. The following paragraphs explain how to adapt this manual to apply to later instruments with higher serial prefix, or earlier instruments with lower serial prefix or number. Technical corrections to this manual (if any) are called errata and are listed on a separate "Manual Changes" sheet supplied with this manual.

7-7. LATER INSTRUMENTS: If the serial prefix of your Model 4328A is above 1828, refer to a separate "Manual Changes" sheet supplied with this manual. Locate the serial prefix of your instrument and make the indicated changes.

7-8. EARLIER INSTRUMENTS (Backdating Changes): If the serial prefix or number of your Model 4328A is 1828J05710 and below, refer to Table 7-1 for the changes necessary to adapt this manual to your particular instrument. Locate the serial prefix or number of your instrument in the table and make the indicated changes. Note that instrument-component values that differ from those in this manual, yet are not listed in this backdating changes, should be replaced using the part number given in this manual

Table 7-1. Backdating Changes.

Instrument Serial Prefix or Number	Make Changes
723 724-00050 to -00120	1, 2, 3, 4, 5, 6, 7, 8, 9, 10, 11, 12, 13, 14, 15, 16, 17, 18, 19, 20
723 724-00121 to -00210	2, 3, 4, 5, 6, 7, 8, 9, 10, 11, 12, 13, 14, 15, 16, 17, 18, 19, 20
747 748-00211 to -00270	3, 4, 5, 6, 7, 8, 9, 10, 11, 12, 13, 14, 15, 16, 17, 18, 19, 20
810 811-00271 to -00300	5, 6, 7, 8, 9, 10, 11, 12, 13, 14, 15, 16, 17, 18, 19, 20
813 814-00301 to -00341	6, 7, 8, 9, 10, 11, 12, 13, 14, 15, 16, 17, 18, 19, 20
818 819-00342 to -00440	8, 9, 10, 11, 12, 13, 14, 15, 16, 17, 18, 19, 20
818 819-00441 to -00730	9, 10, 11, 12, 13, 14, 15, 16, 17, 18, 19, 20
1039 1040 and below	10, 11, 12, 13, 14, 15, 16, 17, 18, 19, 20
1210 and below	11, 12, 13, 14, 15, 16, 17, 18, 19, 20
1233 and below	12, 13, 14, 15, 16, 17, 18, 19, 20
1334-02811 and below	13, 14, 15, 16, 17, 18, 19, 20
1420 and below	14, 15, 16, 17, 18, 19, 20
1542J04620 and below	15, 16, 17, 18, 19, 20
1542J04870 and below	16, 17, 18, 19, 20
1542J05050 and below	17, 18, 19, 20
1828J05530 and below	18, 19, 20
1828J06420 and below	20

CHANGE 1

Page 6-4, Table 6-2

Add A2CR205, HP Part No. 1901-0040, DIODE:SILICON.
Change A2R201 and A2R207 to HP Part No. 0683-1545, R:FXD COMP 150kΩ 5% 1/4W.
Change A2R202 and A2R208 to HP Part No. 0683-1045, R:FXD COMP 100kΩ 5% 1/4W.

Page 6-5, Table 6-2

Delete A2R238.
Change A2R201 and A2R207 to 150kΩ.
Change A2R202 and A2R208 to 100kΩ.

Page 8-19, Figure 8-18

Replace A2R238 with A2CR205 as shown in partial schematic Figure 7-1.

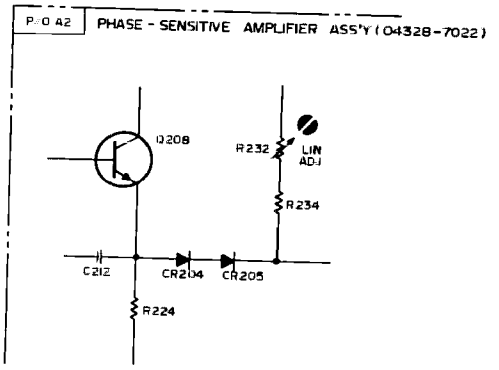

Figure 7-1. Partial Schematic of A2 Ass'y

CHANGE 2

Page 6-6, Table 6-2

Change A3 Board Ass'y, HP Part No. 04328-7034 to 04328-7023.

Service Note: Board Ass'y 04328-7023 is interchangeable with Board Ass'y 04328-7043.

Page 6-7, Table 6-2

Delete A3CR321.

Page 6-8, Table 6-2

Change A3R342 to HP Part No. 0683-3325, R:FXD COMP 3.3kΩ 5% 1/4W.
Change A3R344 to HP Part No. 0683-4325, R:FXD COMP 4.3kΩ 5% 1 4W.
Change A3R346 to HP Part No. 0683-1045, R:FXD COMP 100kΩ 5% 1/4W.

Page 8-17, Figure 8-14

Change a part of A3 schematic as follows:

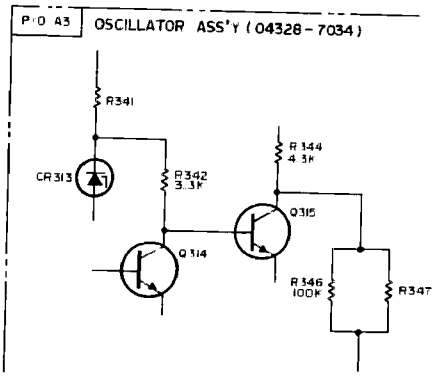

Figure 7-2. Partial Schematic of A3 Ass'y

Page 6-11, Table 6-2

Delete C2 100μF connected between Recorder output terminals.

Page 8-19, Figure 8-18

Delete C2, 100μF capacitor.

CHANGE 3

Page 6-9, Table 6-2
Change A4R112 to HP Part No. 04328-8618, R:FXD W.W. 750mΩ 0.2%.
Change A4R113 to HP Part No. 04328-8617, R:FXD W.W. 490mΩ 0.2%.
Change A4R114 to HP Part No. 04328-8616, R:FXD W.W. 430mΩ 0.2%.
Change A4R115 to HP Part No. 04328-8615, R:FXD W.W. 414mΩ 0.2%.
Change A4R116 to HP Part No. 04328-8614, R:FXD W.W. 406mΩ 0.2%.

Service Note: These five resistors mentioned above are not separately replaceable. If necessary, replace all five resistors as a set to the values shown in this manual.

Page 8-17, Figure 8-14
Change A4R112 to 750mΩ, A4R113 to 490mΩ, A4R114 to 430mΩ, A4R115 to 414mΩ and A4R116 to 406mΩ.

CHANGE 4

Page 6-6, Table 6-2
Change A3C318 to HP Part No. 0180-1029, C:FXD TANT 1μF 20% 15VDCW.

Page 6-7, Table 6-2
Change A3R303 to HP Part No. 0683-3945, R:FXD COMP 390kΩ 5% 1 4W.
Change A3R304 to HP Part No 0683-3935, R:FXD COMP 39kΩ 5% 1/4W.
Change A3R305 to HP Part No. 0683-1035, R:FXD COMP 10kΩ 5% 1/4W.
Change A3R310 to HP Part No 0683-1535, R:FXD COMP 15kΩ 5% 1/4W.
Change A3R311 to HP Part No. 0683-5125, R:FXD COMP 5.1kΩ 5% 1/4W.
Change A3R313 to HP Part No. 0683-6835, R:FXD COMP 68kΩ 5% 1/4W.
Change A3R314 to HP Part No. 0683-1235, R:FXD COMP 12kΩ 5% 1/4W.

Page 6-8, Table 6-2
Change A3R323 to HP Part No. 0683-3325, R:FXD COMP 3.3kΩ 5% 1/4W.

Page 8-17, Figure 8-14
Change A3R303 to 390kΩ, A3R304 to 39kΩ, A3R305 to 10kΩ, A3R310 to 15kΩ, A3R311 to 5.1kΩ, A3R313 to 68kΩ, A3R314 to 12kΩ and A3R323 to 3.3kΩ.

CHANGE 5

Page 6-4, Table 6-2
Change A2C207 to HP Part No. 0140-0194, C:FXD MICA 110pF 5% 300VDCW.

Service Note: See "CHANGE 9"

Page 6-5, Table 6-2
Change A2R238 to HP Part No. 0683-4715, R:FXD COMP 470Ω 5% 1/4W.

Page 6-6, Table 6-2
Delete A3C322.

Page 8-19, Figure 8-18
Change A2C207 to 110pF and A2R238 to 470Ω.

Page 8-17, Figure 8-14
Delete A3C322.

CHANGE 6

Page 6-7, Table 6-2
Change A3R304 to HP Part No. 0683-2035, R:FXD COMP 20kΩ 5% 1/4W.
Delete A3CR322 and A3CR323.

Page 6-8, Table 6-2
Delete A3R360.

Page 8-17, Figure 8-14
Delete A3CR322 and A3CR323
Change A3R304 to 20kΩ.
Delete A3R360 and replace with a short circuit.

CHANGE 7

Page 6-3, Table 6-2

Change A1CR305 and A1CR310 to HP Part No. 1902-3110, DIODE:BREAKDOWN 5.9V 2%.

Service Note: Use 1902-0049 for replacement.

Page 8-21, Figure 8-20

Change the statement of A1CR305 and A1CR310 to 5.9V.

CHANGE 8

Page 6-5, Table 6-2

Change A2R230 to HP Part No. 0757-0199, R:FXD MET FLM 21.5kΩ 1% 1/8W.
Change A2R234 to HP Part No. 0698-3155, R:FXD MET FLM 4.64kΩ 1% 1/8W

Page 8-19, Figure 8-18

Change A2R230 to 21.5kΩ and A2R234 to 4.64kΩ.

CHANGE 9

Page 6-4, Table 6-2

Change A2C207 to HP Part No. 0140-0204, C FXD MICA 47pF 5% 300VDCW.

Service Note If the accuracy on the 100Ω Range does not meet with specifications when a sample under test has a series reactance up to two times full scale resistance, proceed following adjustments:

1) Adjust A2C208.
2) Change A2C207 to a value between 47pF and 91pF.
3) Change A5C202 to a value between 0.020μF and 0.024μF

Page 8-19, Figure 8-18

Change A2C207 to 47pF

CHANGE 10

Page 6-2, Table 6-2

Change HP Part No. of METER TRIM to 5020-0704.
Change HP Part No. of SIDE COVER to 5000-0703.
Change HP Part No. of COVER:TOP to 5070-0706.
Change HP Part No. of COVER:BOTTOM to 5000-0711.
Change HP Part No. of PANEL:REAR to 04328-1022.
Change HP Part No. of PANEL:FRONT to 04328-1021.

Page 6-11, Table 6-2

Add A7; 04328-7035, POWER SWITCH ASS'Y.
Add A7R1-A7R403; NOT ASSIGNED.
Add A7R404; 0757-0476, R:FXD MET FLM 301kΩ 1% 1/8W.
Add A7R405; 0683-4725, R:FXD COMP 4.7kΩ 5% 1/4W.
Add A7S1; 3101-0247, SWITCH:POWER PUSH BUTTON UEG-42L.
Add A7S2; 3101-0249, SWITCH:BATT TEST PUSH BUTTON UEG-421.

Delete R1; 0757-0476, R:FXD MET FLM 301kΩ 1% 1/8W.
Delete R2; 0683-4725, R:FXD COMP 4.7kΩ 5% 1/4W.
Delete R3; 0683-3335, R:FXD COMP 33kΩ 5% 1/4W.
Delete S2; 3101-0272, SWITCH:TOGGLE ON-OFF-ON.
Delete S3; 3101-0273, SWITCH:PUSH BUTTON BATT TEST.
Delete DS1; 2140-0015, LAMP:NEON NE-2H.
Add DS1; 1450-0048, LAMP:LIGHT-IND, RED.

Page 6-12, Table 6-2

Change HP Part No. of W1; CABLE ASS'Y:POWER to 8120-0078.
Add W3; 04328-7202, CABLE ASS'Y.
Delete XA1; 1251-0135, CONNECTOR:PRINTED CIRCUIT 15 CONTACTS.

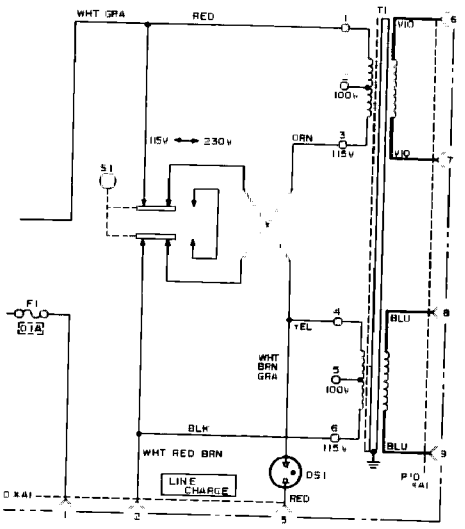

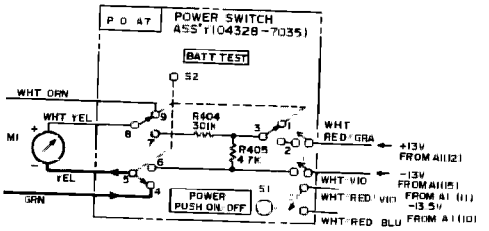

CHANGE 11

Page 6-2, Table 6-2,

Change HP Part No. of METER TRIM to 5060-7633.
Change HP Part No. of PANEL:FRONT to 04328-1121.

Page 6-12, Table 6-2

Change HP Part No. of CABLE ASS'Y PROBE WITH CONNECTOR:MINT GRAY to 04328-7127.
Delete 16143A PROBE CABLE.

CHANGE 12

Page 6-9, Table 6-2,

Add A4S101; 3100-1134, SWITCH:RANGE ROTALY.
Delete A4S101; 3100-1173, SWITCH:RANGE ROTALY.
Add A4R102; 04328-8607, R:FXD W.W. 1.5Ω 0.1%.
Add A4R103; 04328-8608, R:FXD W.W. 5Ω 0.1%.
Add A4R104; 04328-8609, R:FXD W.W. 15Ω 0.1%.
Add A4R105; 04328-8610, R:FXD W.W. 50Ω 0.1%.
Add A4R106; 04328-8611, R:FXD W.W. 150Ω 0.1%.
Add A4R107; 04328-8612, R:FXD W.W. 500Ω 0.1%.
Add A4R108, 0698-1465, R:FXD MET FLM 1.5kΩ 0.1% 1 4W.
Add A4R110; 0698-1467, R:FXD MET FLM 15kΩ 0.1% 1 4W.

Delete A4R102; 04328-8626, R:FXD W.W. 1.447Ω 0.1%.
Delete A4R103; 04328-8627, R:FXD W.W. 4.94Ω 0.1%.
Delete A4R104; 04328-8628, R:FXD W.W. 14.85Ω 0.1%.
Delete A4R105; 04328-8629, R:FXD W.W. 49.6Ω 0.1%.
Delete A4R106; 04328-8630, R:FXD W.W. 148.8Ω 0.1%.
Delete A4R107; 04328-8631, R:FXD W.W. 497.1Ω 0.1%.
Delete A4R108; 0698-2125, R:FXD MET FLM 1.492kΩ 0.1%.
Delete A4R110; 0698-2126, R:FXD MET FLM 14.11kΩ 0.1%.

CHANGE 13

Page 6-5, Table 6-2,

Add A2R228, 2100-1777, R:VAR W.W. 20kΩ LIN 5% 1W.
Add A2R229, 2100-1777, R:FAR W.W. 20kΩ LIN 5% 1W.
Add A2R232, 2100-1775, R:VAR W.W. 5kΩ LIN 10% 1/2W.
Add A2R234, 0757-0439, R:FXD MET FLM 6.81kΩ 1% 1/8W.
Add A2R230; 0698-3161, R:FXD MET FLM 38.3kΩ 1% 1/8W.

Delete A2R228, 2100-1948, R:VAR W.W. 50kΩ LIN 5% 1W.
Delete A2R229; 2100-1948, R:VAR W.W. 50kΩ LIN 5% 1W.
Delete A2R232; 2100-1777, R:VAR W.W. 20kΩ LIN 5% 1W.
Delete A2R234; 0757-0283, R:FXD MET FLM 2kΩ 1% 1/8W.
Delete A2R230; 0757-0959, R:FXD MET FLM 30kΩ 2% 1/8W.

CHANGE 14

Page 6-4, Table 6-2,
Delete A2C218; 0160-0127, C:FXD CER 1μF 20% 25VDCW.

Page 4-7, Figure 4-5,
Delete A2C218.

Page 8-19, Figure 8-17,
Delete A2C218.

Page 6-7, Table 6-2,
Change A3CR322 to HP Part No. 1902-3110, DIODE BREAKDOWN 5.9V 400mW.
Change A3CR323 to HP Part No. 1902-3110, DIODE BREAKDOWN 5.9V 400mW.
Change A3Q312 to HP Part No. 1853-0010, TRANSISTOR:SILICON.
Change A3Q313 to HP Part No. 1853-0010, TRANSISTOR:SILICON.

Page 8-17, Figure 8-14,
Change voltages of CR322 and CR323 to 5.9V.

Page 6-2, Table 6-2,
Change HP Part No. of PANEL:FRONT to 04328-1221.

Page 6-11, Table 6-2,
Change DS1 to 2140-0015, LAMP:NEON NE-2H.
5040-0234, LAMP:HOLDER FOR DS1.
5040-0235, LAMP:HOLDER FOR DS1.
Change R3 to HP Part No. 0683-3335, R:FXD COMP 33kΩ 5% 1/4W.

CHANGE 15

Page 6-4, Table 6-2, Page 8-19, Figure 8-17,
Change A2C207 to HP Part No. 0140-0193, C:FXD MICA 82pF 5% 300VDCW.

CHANGE 16

Page 6-4, Table 6-2, Page 8-19, Figure 8-17,
Change A2C207 to HP Part No. 0160-2204, C:FXD MICA 100pF 5% 300VDCW.

CHANGE 17

Page 6-4, Table 6-2, Page 8-19, Figure 8-1,
Change A2C207 to HP Part No. 0140-0191, C:FXD MICA 56pF 5% 300VDCW.

CHANGE 18

Page 6-5, Table 6-2,
Change A2R228 to HP Part No. 2100-3253, R:VAR 50kΩ 10% 1/2W.
Change A2R229 to HP Part No. 2100-3253, R:VAR 50kΩ 10% 1/2W.
Change A2R232 to HP Part No. 2100-0558, R:VAR 20kΩ 10% 1/2W.
Change A2R233 to HP Part No. 2100-0567, R:VAR 2kΩ 10% 1/2W.

CHANGE 19

Page 6-4, Table 6-2,
Change A2Q209 to HP Part No. 1854-0071.
Page 6-7, Table 6-2,
Change A3Q301 and A3Q308 to HP Part No. 1854-0071.

CHANGE 20

Page 6-5, Table 6-2,
Add A2R225; 0683-2035, R: FXD 20kΩ 5% 1/4W.
Add A2R228; 2100-3253, R: VAR 50kΩ 10% 1/2W.
Add A2R229; 2100-3253, R: VAR 50kΩ 10% 1/2W.
Add A2R230; 0757-0453, R: FXD 30.1kΩ 1% 1/8W.
Add A2R232; 2100-0558, R: VAR 20kΩ 10% 1/2W.
Add A2R234; 0757-0283, R: FXD 2kΩ 1% 1/8W.

Delete A2R225; 0698-3160, R: FXD 31.6kΩ 1% 1/8W.
Delete A2R228; 2100-0558, R: VAR 20kΩ 10% 1/2W.
Delete A2R229; 2100-0558, R: VAR 20kΩ 10% 1/2W.
Delete A2R230; 0698-3161, R: FXD 38.3kΩ 1% 1/8W.
Delete A2R232; 2100-3252, R: VAR 5kΩ 10% 1/2W.
Delete A2R234; 0757-0439, R: FXD 6.81kΩ 1% 1/8W.

NOTES

SECTION VIII
TROUBLESHOOTING AND CIRCUIT DIAGRAMS

8-1. INTRODUCTION

8-2. This section contains troubleshooting instructions, schematics, and component locations for the milliohmmeter. Also included is an overall block diagram that indicates the location of test point in the instrument

8-3. Reference designations shown within circuit card outlines are abbreviated. To find the part in the Reference Designation Index, use the full reference designation. For example, R305 on the A3 Oscillator Assembly is listed as A3R305.

8-4. The Schematic Diagram Notes in Figure 8-1 pertain to all the schematics. Additional notes on the schematics indicate test conditions, and special information for use when maintain the instrument.

8-5. TROUBLESHOOTING

8-6. Table 8-1 is the Overall Troubleshooting chart for the milliohmmeter. Procedures for isolating circuit malfunctions to specific stages are based on the use of the YEW Type 2782 Standard Resistors and YEW Type 2786 or GR Model 1432T Decade Resistance Box and the calibration procedures in Section V. The information obtained when calibration is attempted is used to troubleshoot the instrument.

8-7. Table 8-1 contains references that direct the user to the detailed troubleshooting charts, Table 8-2 through 8-10. The detailed charts refer the user to transistor stages. In a few instances, specific parts are called out as being possible causes of circuit malfunction, however, the troubleshooting charts are not intended to locate specific parts that have failed. They are intended to locate only malfunctioning stages.

8-8. SCHEMATICS

8-9 The schematics contain signal routing information, nominal voltage levels, and notes that assist in understanding the circuit. They are laid out to show electrical operation, and are not intended as wiring diagrams.

8-10. Component location photographs next to the schematics indicate the physical location of parts. Test points are also shown.

8-11. Factory selected parts are indicated by an asterisk. These are components that generally are installed to fulfill circuit operation requirements. They may be the nominal value, or they may be some value close to nominal. In any case, if the component fails, circuit operation should be verified after these components are replaced.

8-12. Component values are shown as follows unless otherwise noted. Resistance in ohms, capacitance in microfarads and inductance in microhenries.

8-13. Wire color is indicated as WHT/ YEL / VIO. First color identifies ground color, second color identifies wide stripe, third color identifies narrow stripe.

SYMBOLS

- FRONT PANEL
- REAR PANEL
- KNOB CONTROL
- SCREWDRIVER ADJUST
- MAIN SIGNAL PATH
- FEEDBACK PATH
- CONDUCTING ELEMENT
- CW — WIPER MOVES TOWARD "CW" WHEN CONTROL IS ROTATED CLOCKWISE
- POWER LINE GROUND
- CIRCUIT COMMON GROUND
- 8 — TEST POINT
- A — "AND" GATE
- I — INHIBIT GATE
- O — "OR" GATE

WAVEFORMS SHOWN ARE TYPICAL

SWITCH DESIGNATIONS

A3S1BR(2-1 2)

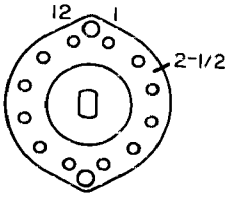

A3S1 — SWITCH S1 WITHIN ASSEMBLY A3

B — 2ND WAFER FROM FRONT (A=1ST, ETC)

R — REAR OF WAFER (F=FRONT)

(2-1 2) — TERMINAL LOCATION ($2\frac{1}{2}$) (VIEWED FROM FRONT)

REFERENCE DESIGNATIONS

REFERENCE DESIGNATIONS WITHIN ASSEMBLIES ARE ABBREVIATED. ADD ASSEMBLY NUMBER TO ABBREVIATION FOR COMPLETE DESCRIPTION.

ASSEMBLY	ABBREVIATION	COMPLETE DESCRIPTION
A25	C1	A25C1
A25A1	CR1	A25A1CR1
NO PREFIX	J3	J3

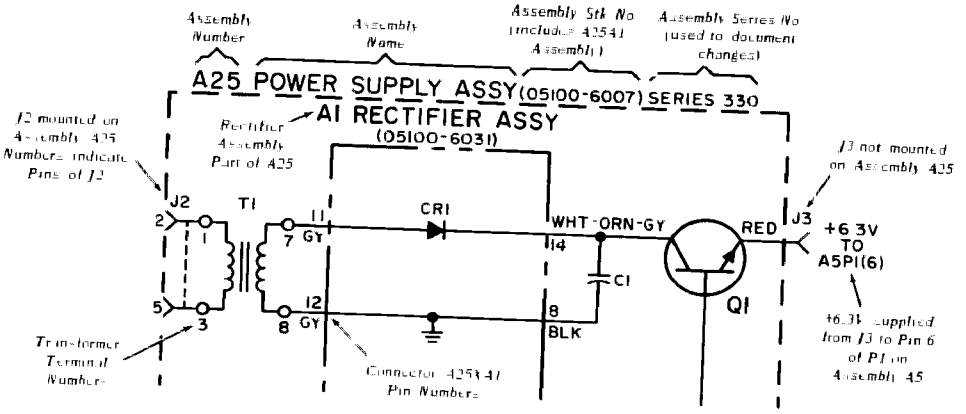

Figure 8-1 Schematic Diagram Notes

TEST POINT MEASUREMENT CONDITIONS AND LOCATIONS

Measurement Conditions

1. Set Range Switch to 1mΩ.
2. DC voltage check, probes open and shorted (voltage in both conditions shown in schematics).
3. To observe waveforms, connect a piece of copper wire (AWG #12 - #18) across probes, and adjust the length to get full scale deflection.
4. Measurement made with respect to CIRCUIT COMMON.

Waveform Test Point Locations

Test Point	Location	Notes
A3TP1	A3Q303 EMITTER	
A3TP2	A3Q307 BASE	
A3TP3	A3Q316 BASE	
A3TP4	A3 BLU	
A3TP5	A3 (9, K)	
A3TP6	A3Q312 BASE	
A2TP7	A2Q201 BASE	
A2TP8	A2Q202 BASE	
A2TP9	A2Q204 BASE	
A2TP10	A2Q205 COLLECTOR	
A2TP11	A2 CR202, CR203 junction	
A2TP12	A2 (2, B)	
A2TP13	A2 (3, C)	
A2TP14	A2 (8), (11)	Use Differential Input.
A2TP15	A2Q209 EMITTER	

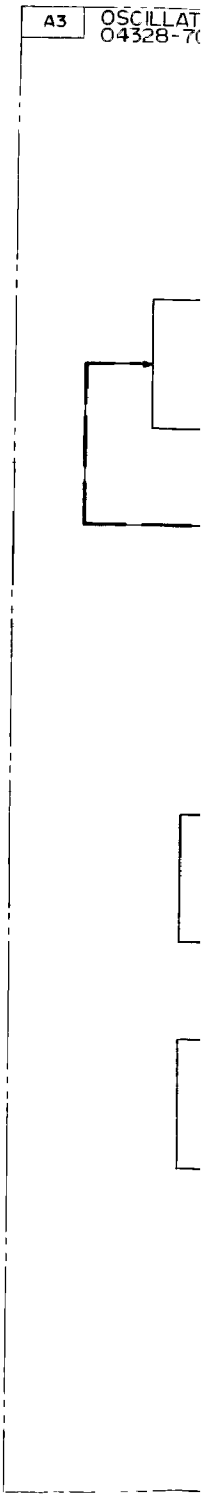

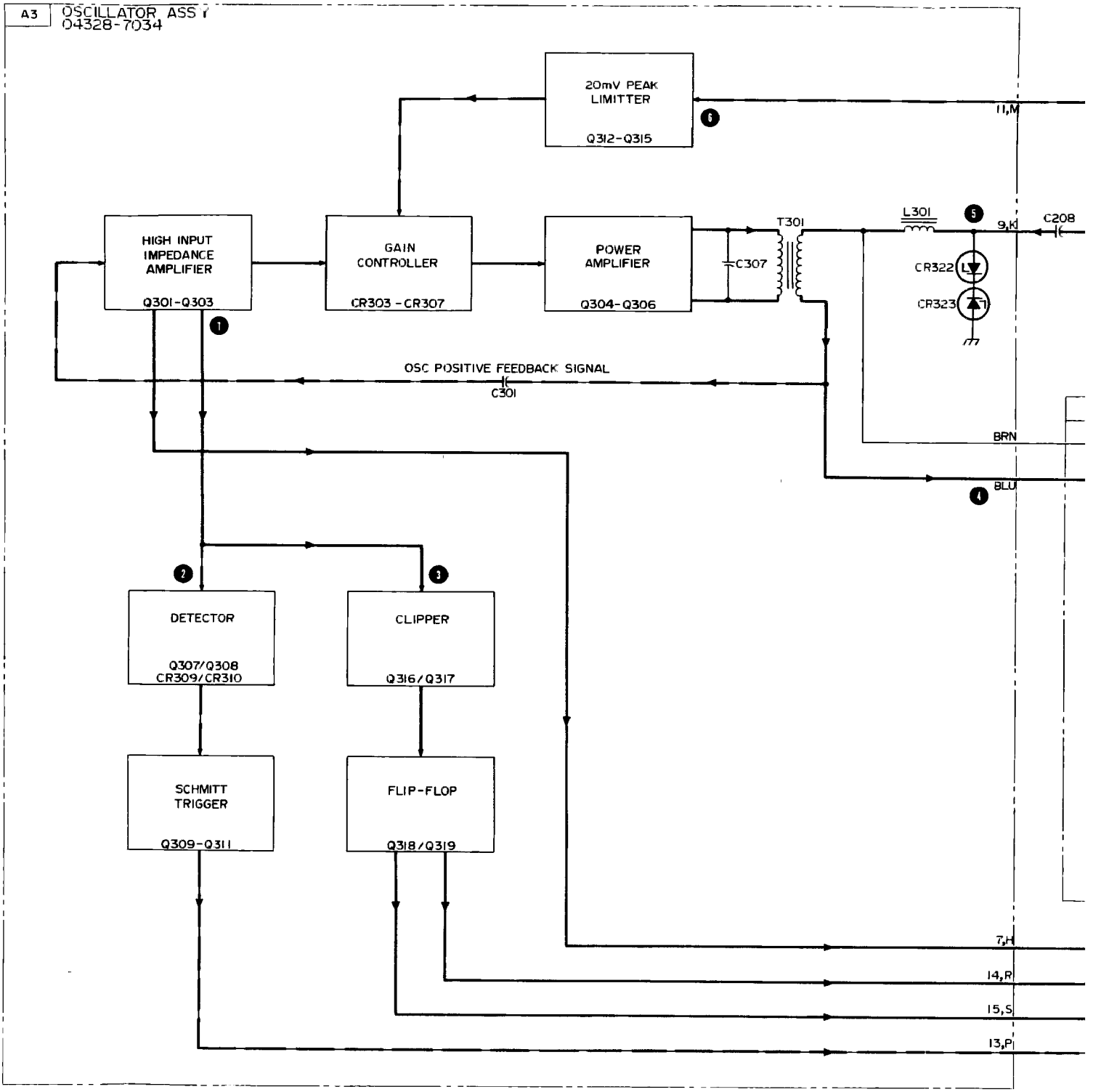
A3 OSCILLATOR ASS'Y
04328-7034
20mV PEAK LIMITTER
Q312-Q315
11,M
HIGH INPUT IMPEDANCE AMPLIFIER
Q301-Q303
GAIN CONTROLLER
CR303 - CR307
POWER AMPLIFIER
Q304-Q306
C307
T301
L301
9,K
C208
CR322
CR323
OSC POSITIVE FEEDBACK SIGNAL
C301
BRN
BLU
DETECTOR
Q307/Q308
CR309/CR310
CLIPPER
Q316/Q317
SCHMITT TRIGGER
Q309-Q311
FLIP-FLOP
Q318/Q319
7,H
14,R
15,S
13,P

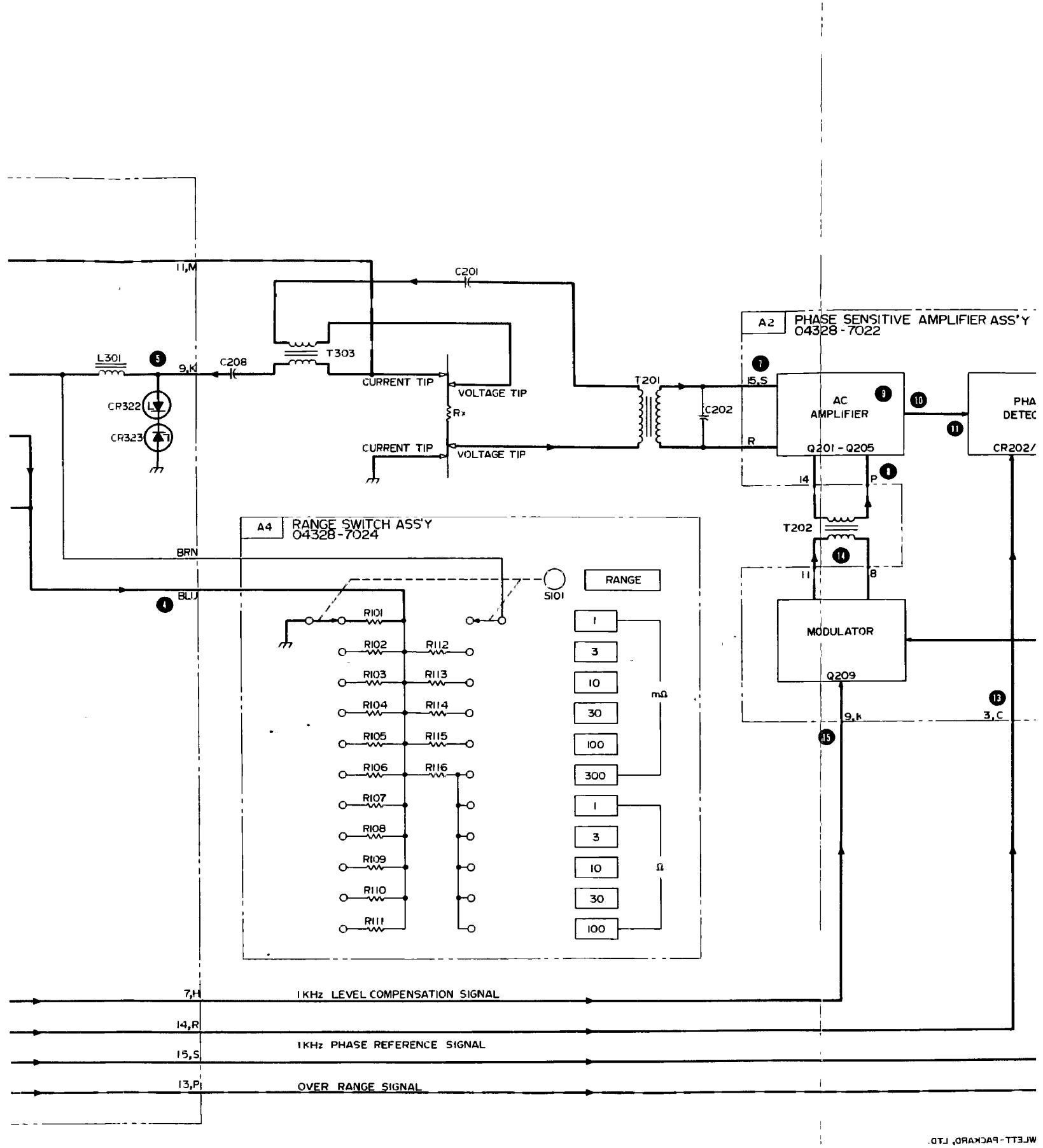
11,M
C201
A2 PHASE SENSITIVE AMPLIFIER ASS'Y
04328-7022
L301
5
9,K
C208
T303
CURRENT TIP
VOLTAGE TIP
Rx
T201
7
15,S
C202
AC
AMPLIFIER
9
10
Q201 - Q205
R
CR322
CR323
CURRENT TIP
VOLTAGE TIP
14
P
8
T202
A4 RANGE SWITCH ASS'Y
04328-7024
BRN
BLU
4
S101
RANGE
R101
R102
R112
R103
R113
R104
R114
R105
R115
R106
R116
R107
R108
R109
R110
R111
1
3
10
30
100
300
mΩ
Ω
MODULATOR
Q209
13
9,K
3,C
15
7,H
1KHz LEVEL COMPENSATION SIGNAL
14,R
1KHz PHASE REFERENCE SIGNAL
15,S
13,P
OVER RANGE SIGNAL

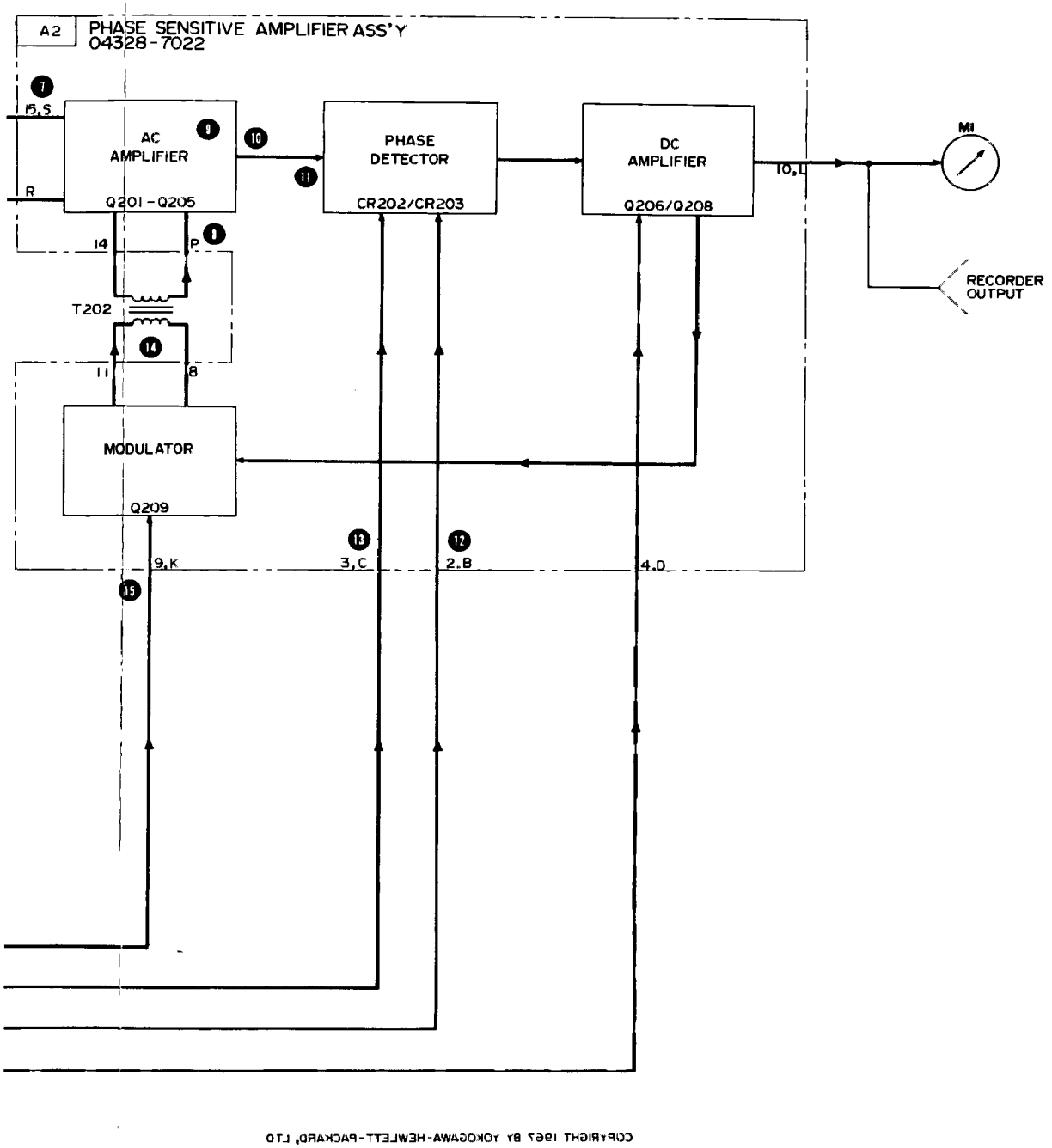

COPYRIGHT 1967 BY YOKOGAWA-HEWLETT-PACKARD, LTD

Figure 8-2. Overall Block Diagram

Figure 8-2

OVERALL BLOCK DIAGRAM

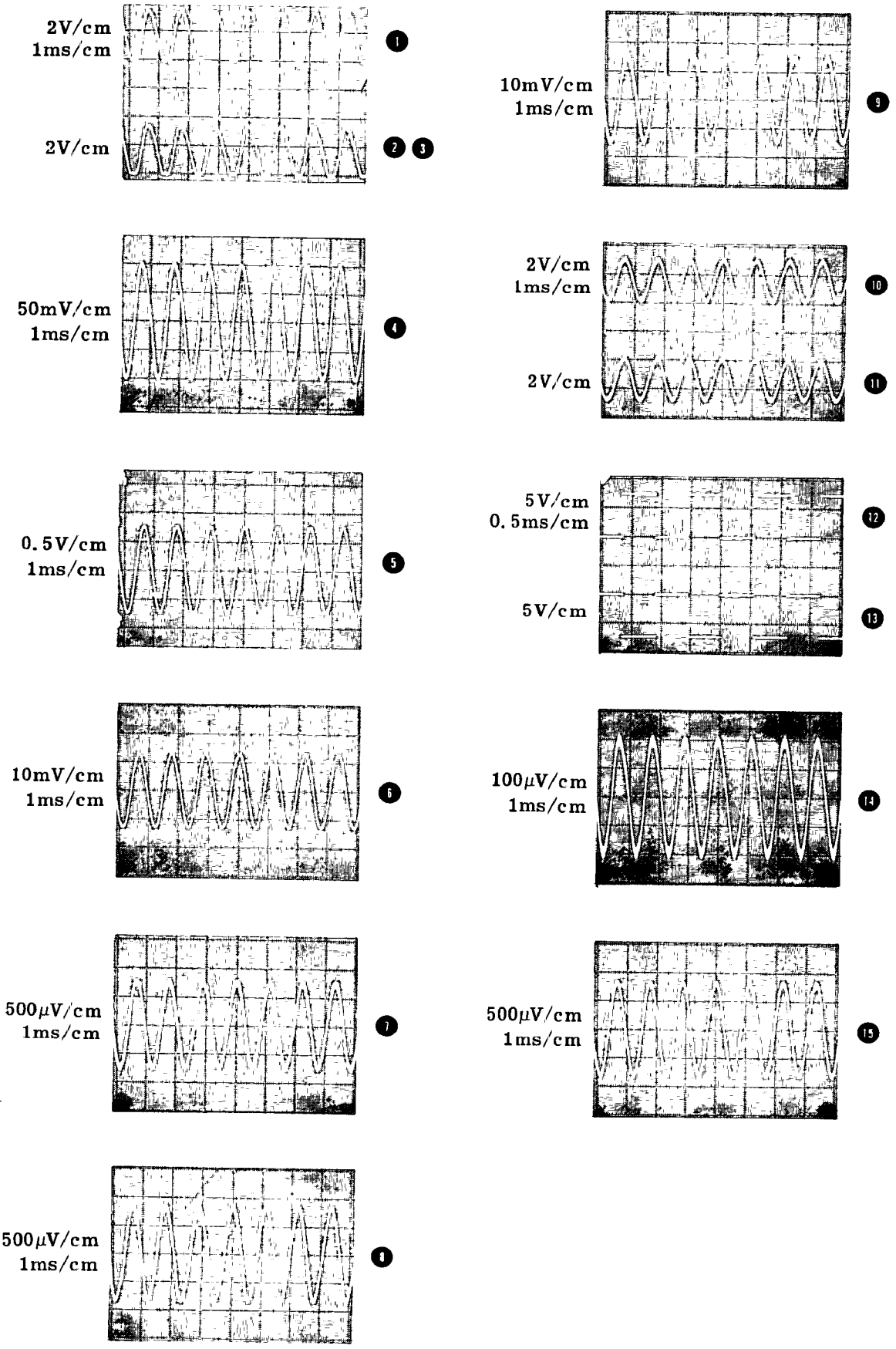

Figure 8-3. Model 4328A Waveforms

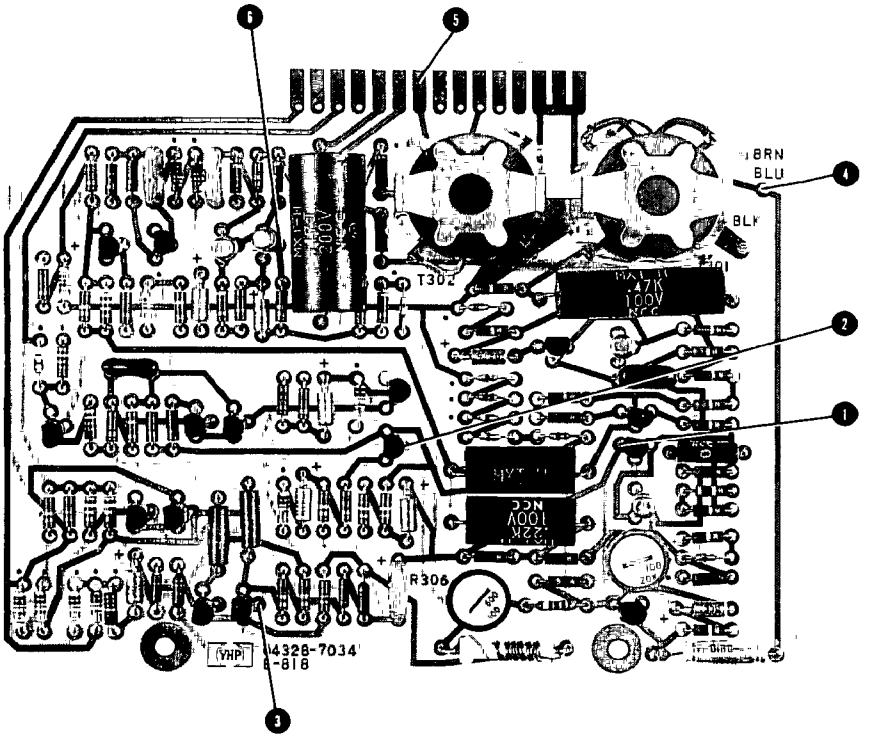

TABLE 8-1
4328A OVERALL TROUBLESHOO

- OK
- METE CALI
- CHECK CALIBRATION USE YEW TYPE 2782 AND YEW TYPE 2786 OR GR MODEL 1432T
- NO D
- METI ∞ E PROE

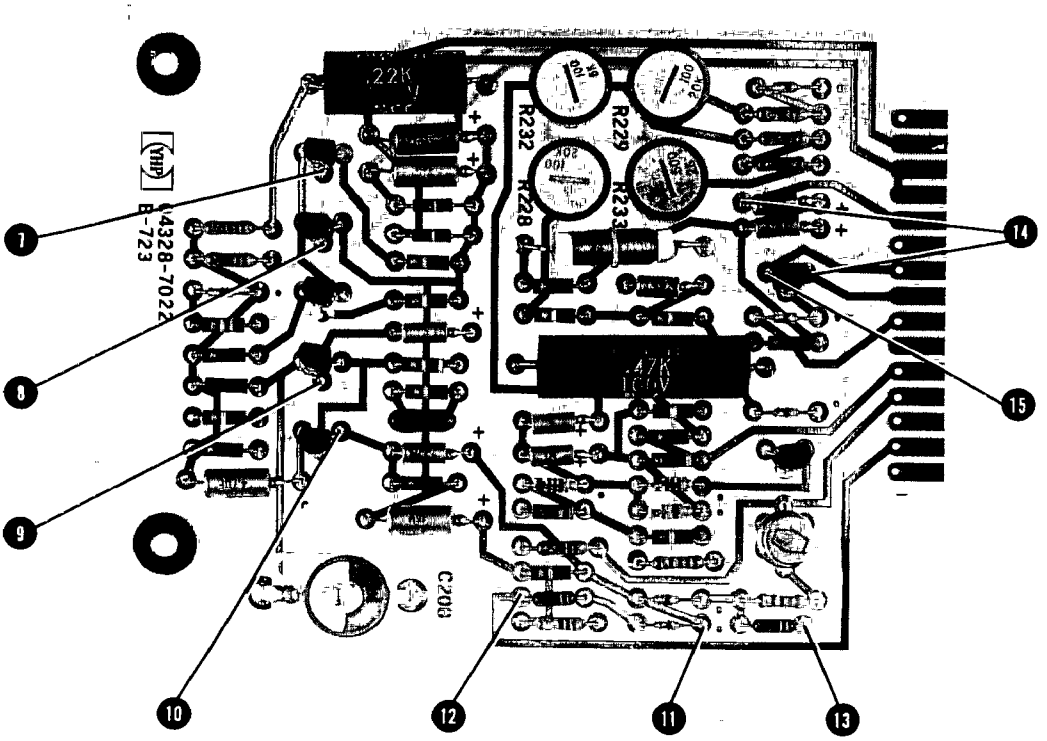

TABLE 8-1
4328A OVERALL TROUBLESHOOTING

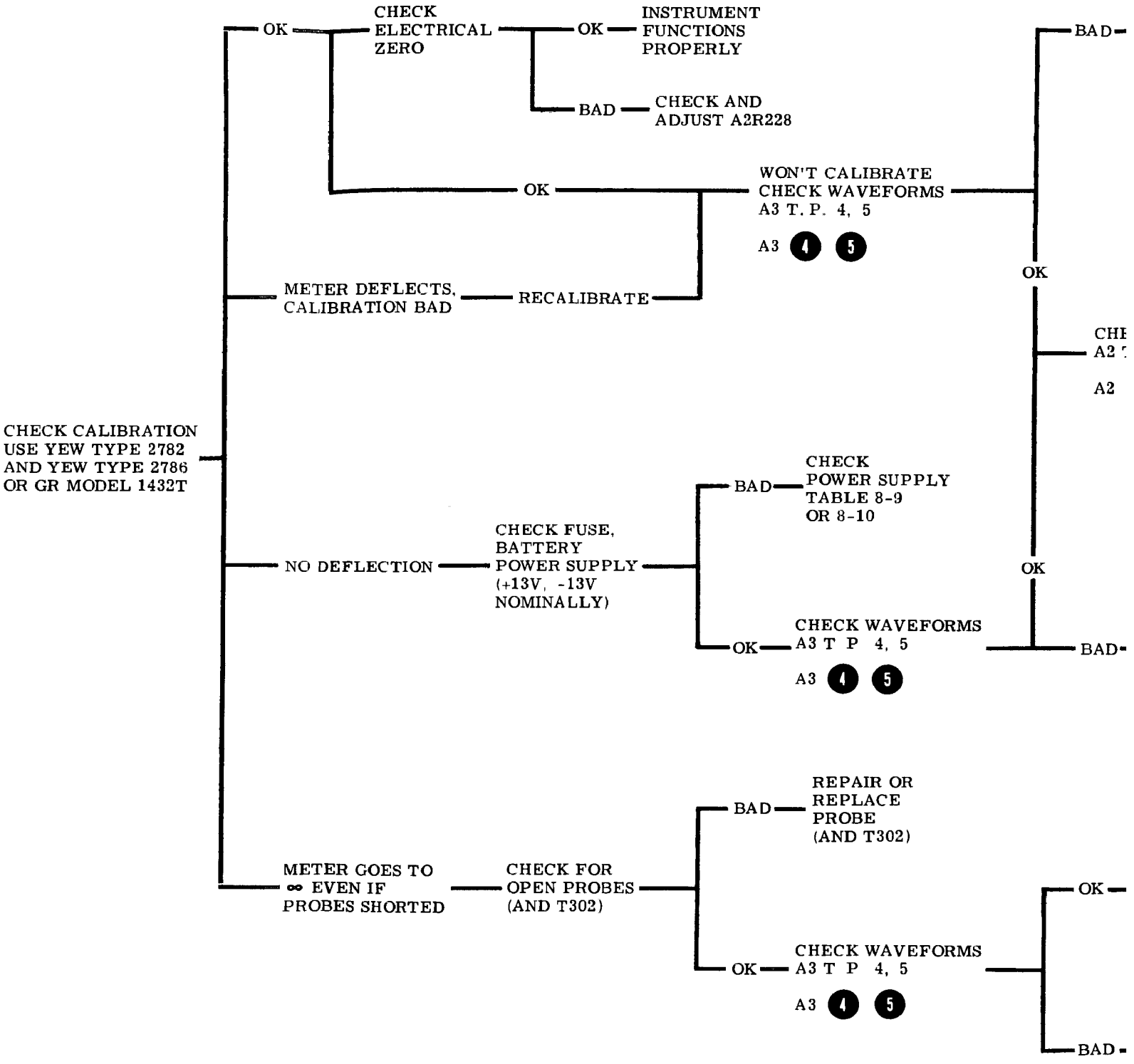

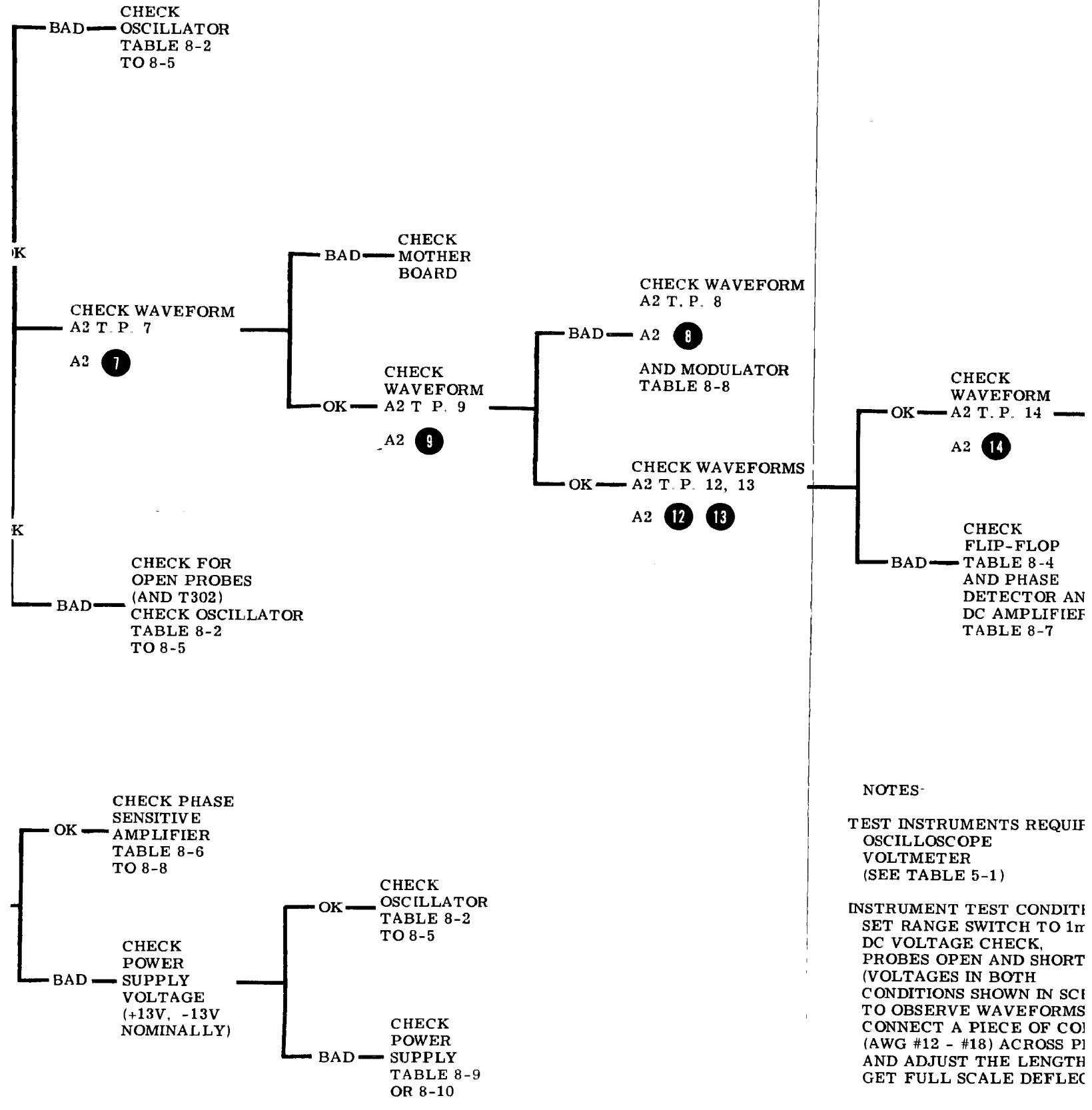

NOTES-

TEST INSTRUMENTS REQUIF
OSCILLOSCOPE
VOLTMETER
(SEE TABLE 5-1)

INSTRUMENT TEST CONDITI
SET RANGE SWITCH TO 1m
DC VOLTAGE CHECK,
PROBES OPEN AND SHORT
(VOLTAGES IN BOTH
CONDITIONS SHOWN IN SCI
TO OBSERVE WAVEFORMS
CONNECT A PIECE OF CO
(AWG #12 - #18) ACROSS PI
AND ADJUST THE LENGTH
GET FULL SCALE DEFLEC

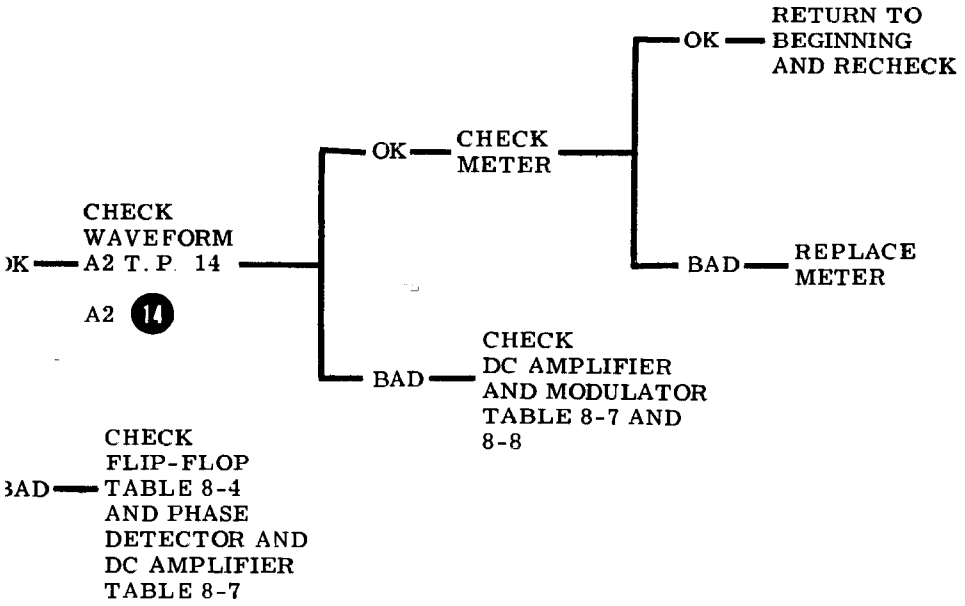

'ES:

INSTRUMENTS REQUIRED
ILLOSCOPE
:TMETER
: TABLE 5-1)

:UMENT TEST CONDITIONS
RANGE SWITCH TO 1mΩ.
VOLTAGE CHECK,
)BES OPEN AND SHORTED
LTAGES IN BOTH
(DITIONS SHOWN IN SCHEMATICS).
OBSERVE WAVEFORMS,
INECT A PIECE OF COPPER WIRE
G #12 - #18) ACROSS PROBES.
) ADJUST THE LENGTH TO
' FULL SCALE DEFLECTION.

Table 8-1. Overall Troubleshooting

SEE INSIDE

Table 8-1
OVERALL TROUBLESHOOTING

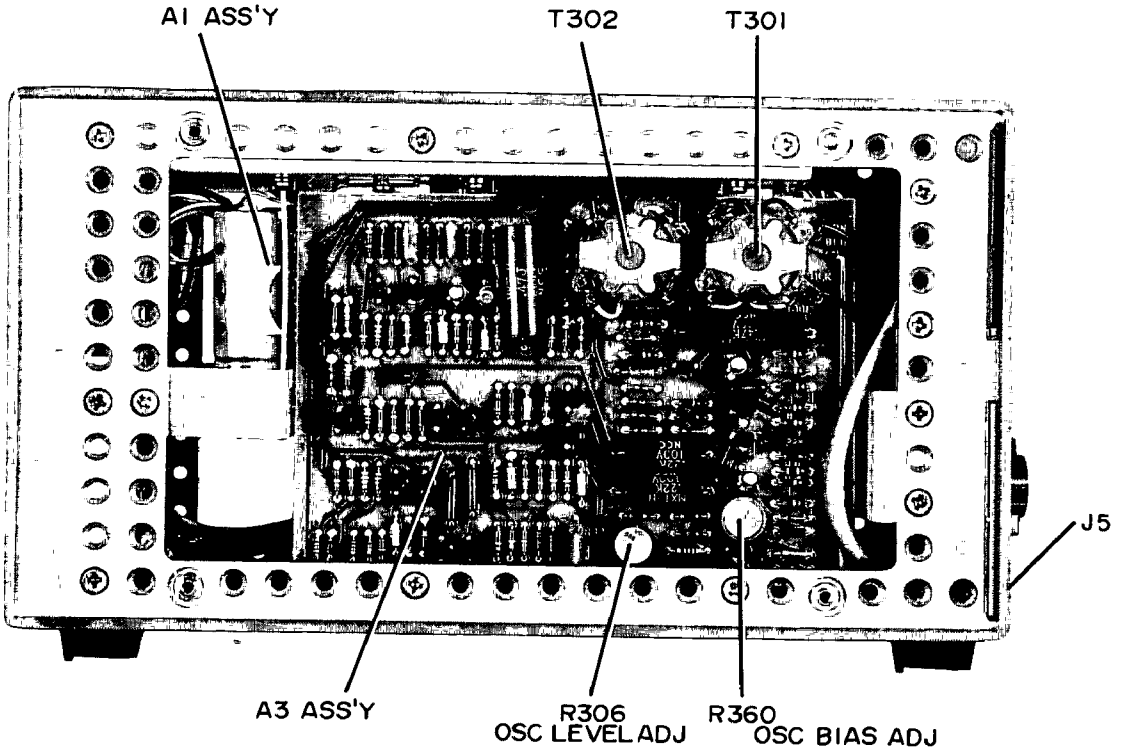

Figure 8-5. Model 4328A Left Internal View

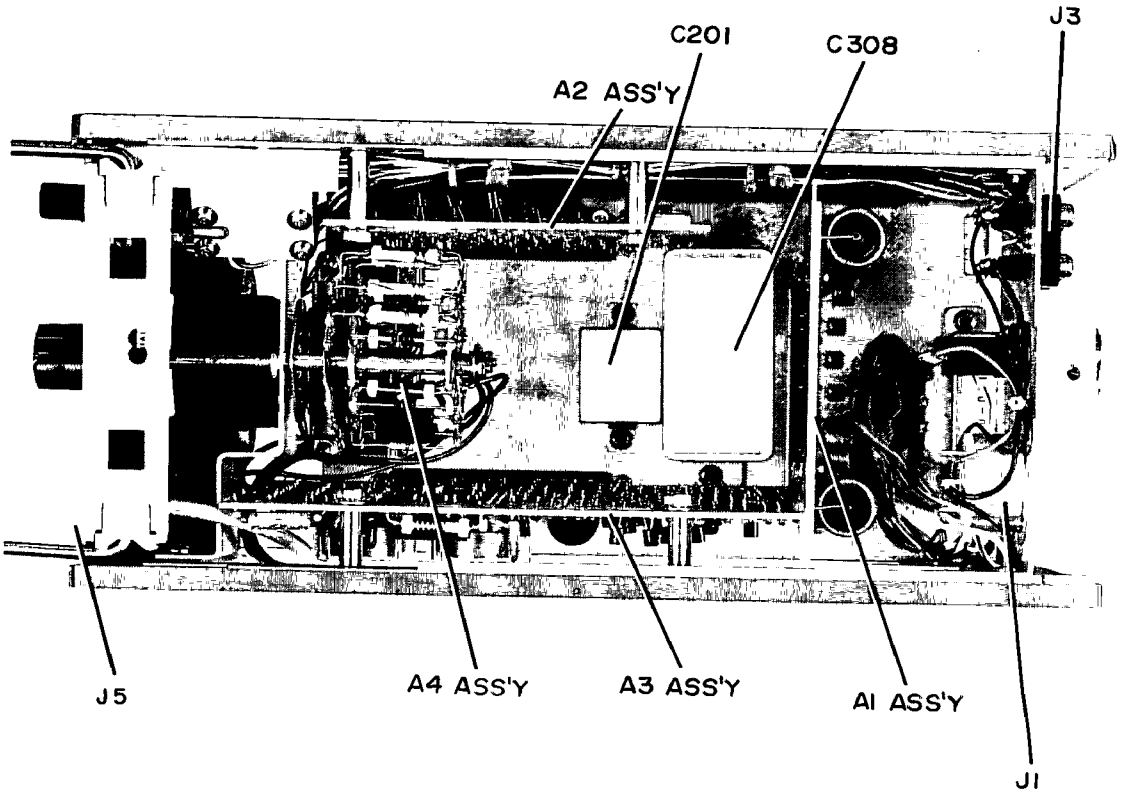

Figure 8-6. Model 4328A Bottom Internal View

TABLE 8-2
OSCILLATOR P/O A3 TROUBLESHOOTING

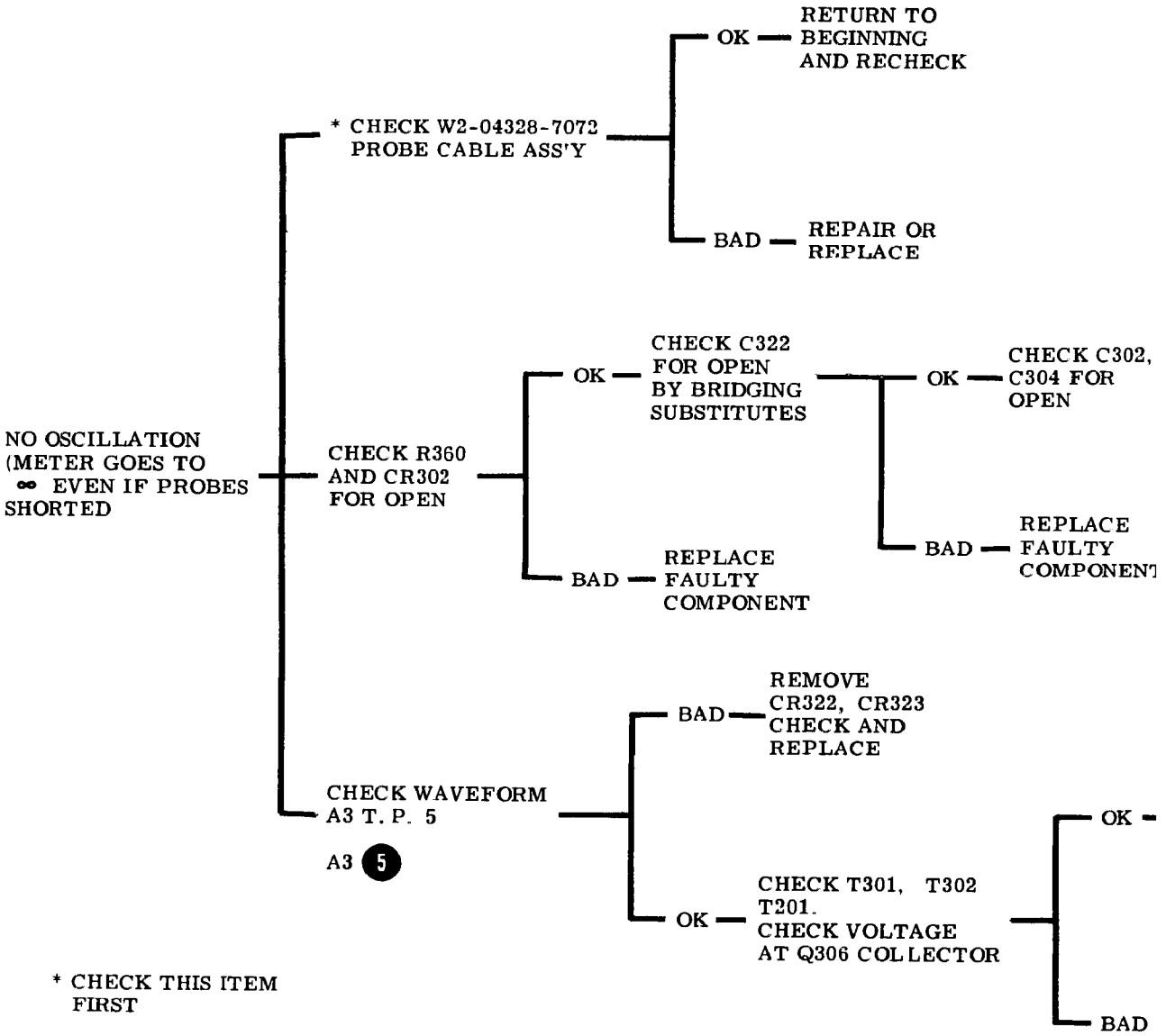

TABLE 8-3
SCHMITT TRIGGER P/

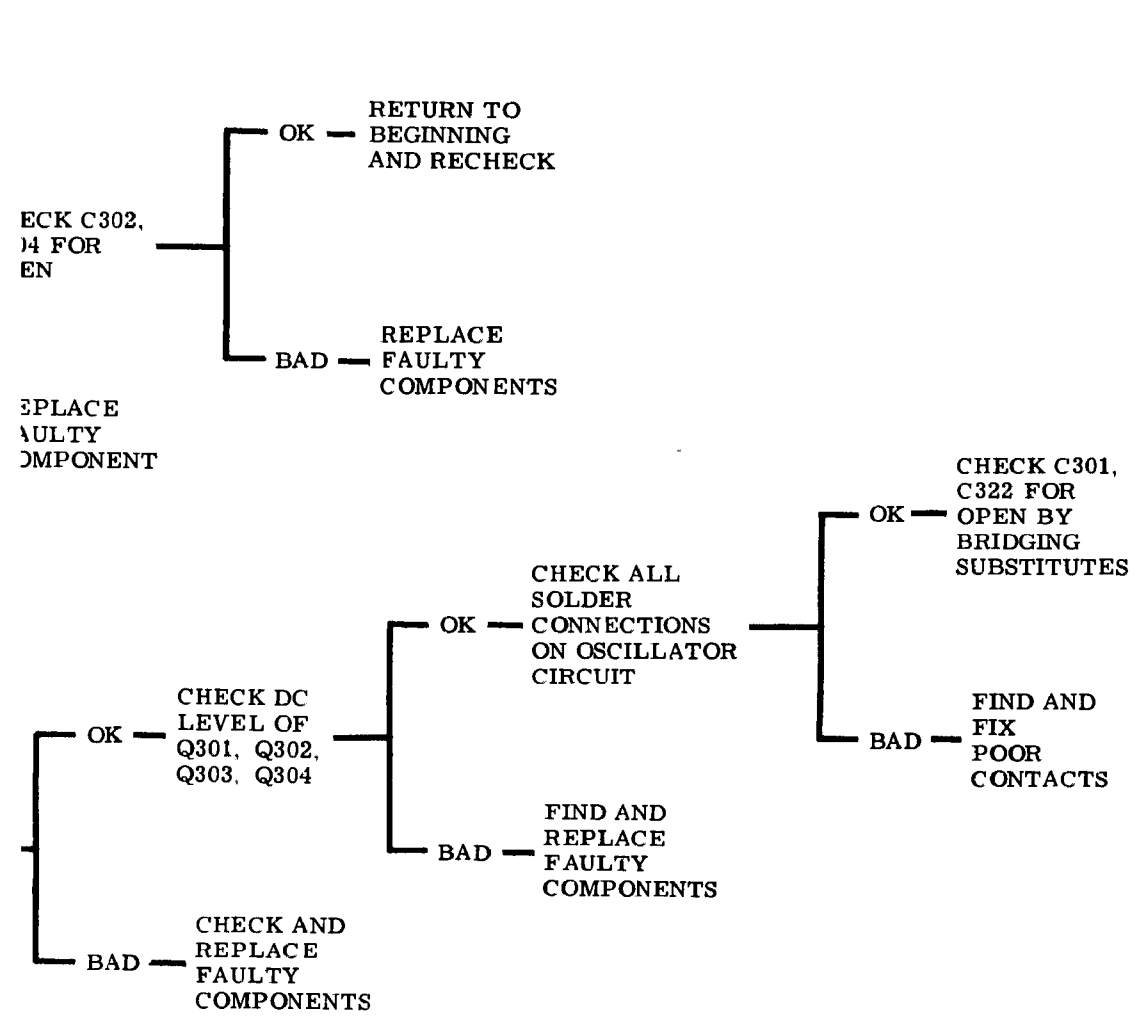

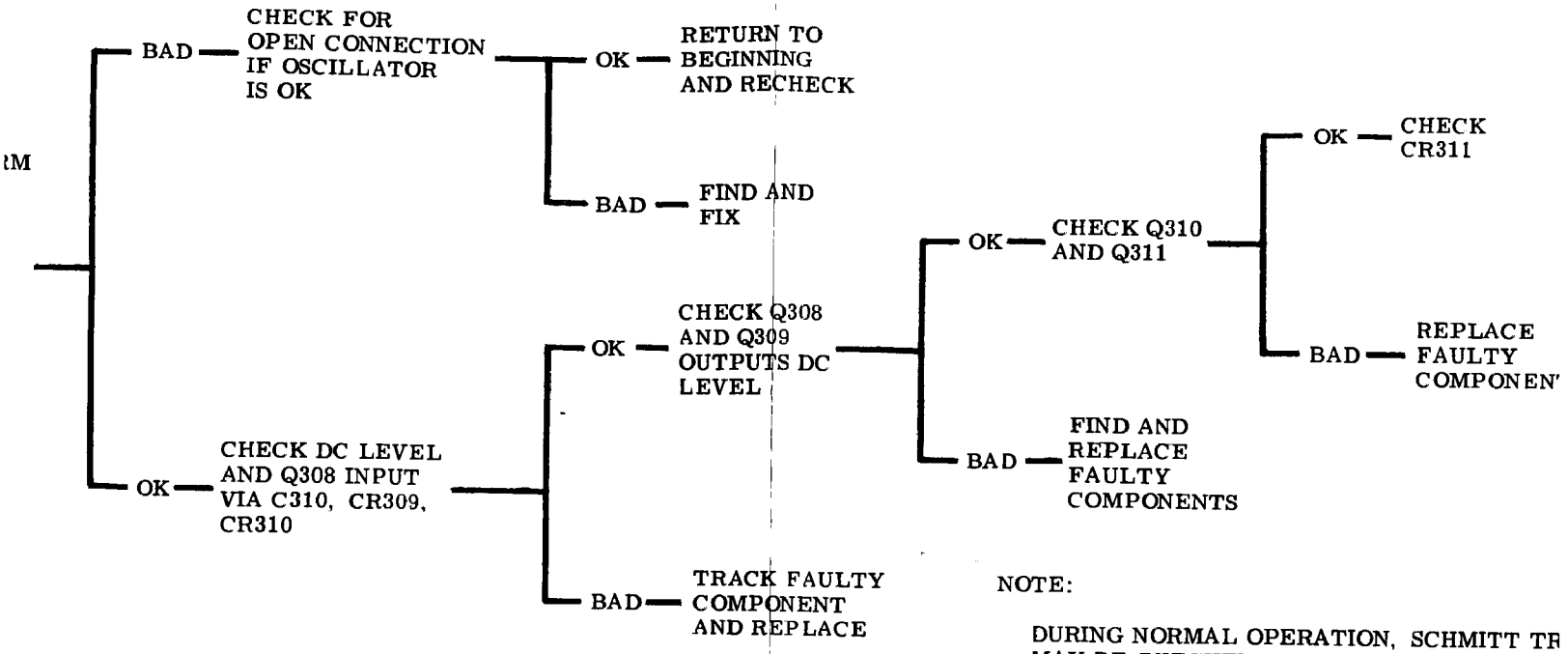

NOTE:

DURING NORMAL OPERATION, SCHMITT TR
MAY BE CHECKED BY OPENING MOMENTAR
LEADS AND MONITORING THE OUTPUT AT

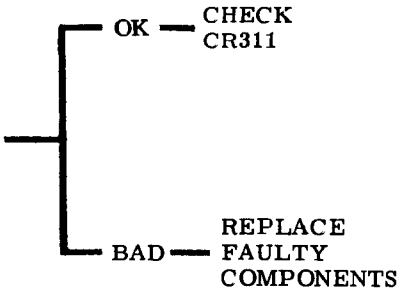

ITS

AL OPERATION, SCHMITT TRIGGER ACTION
KED BY OPENING MOMENTARILY THE PROBE
ONITORING THE OUTPUT AT A3 (13, P)

Table 8-2, 8-3. Troubleshooting

TABLE
OSCILL

NO OSCI
(METER
∞ EVE
SHORTE

* C
F

SEE INSIDE

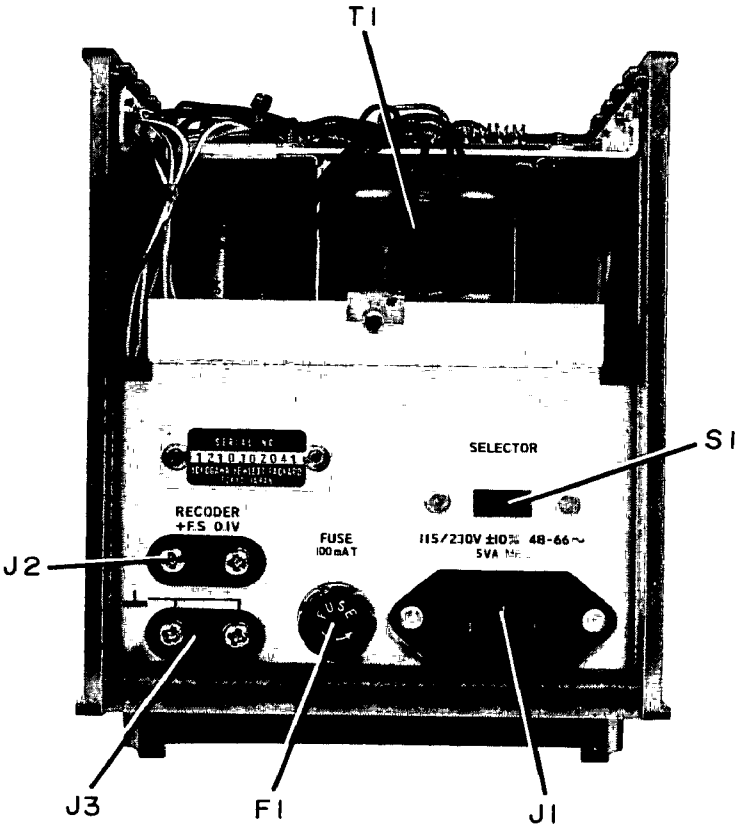

Figure 8-7. Model 4328A Rear Internal View

TABLE 8-4
FLIP-FLOP P/O A3 TROUBLESHOOTING

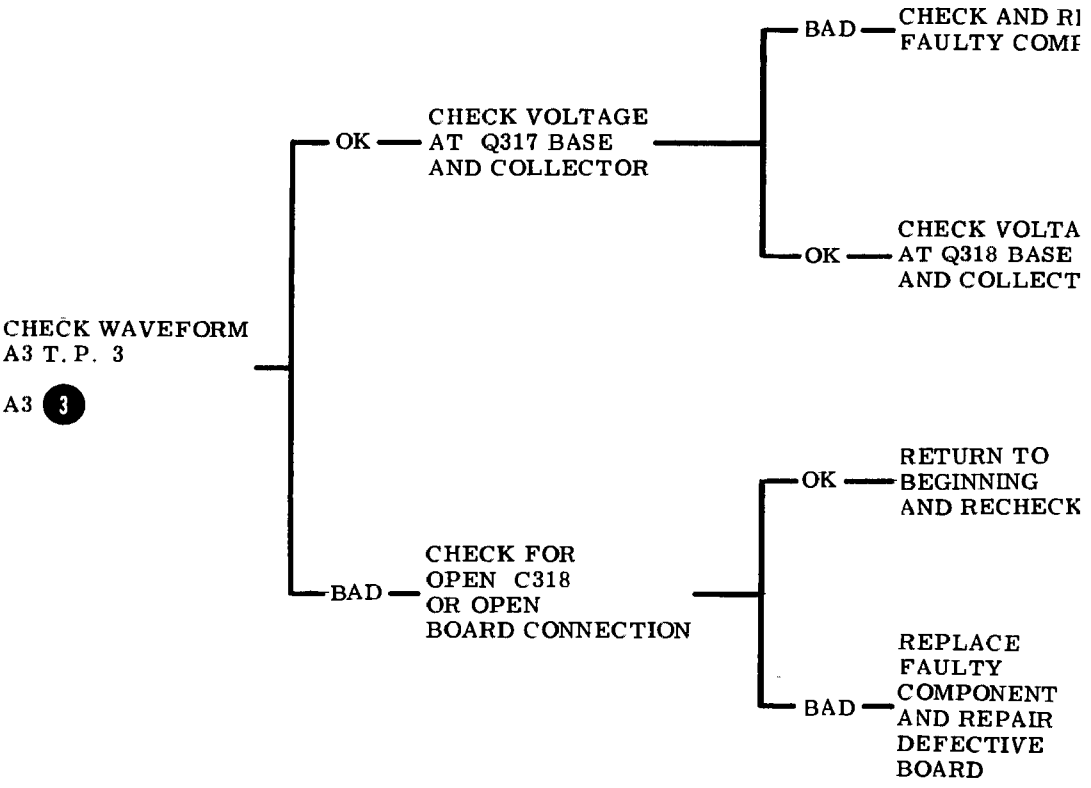

TABLE 8-5
LIMITTER P/O A3 TRO

) REPLACE
)MPONENT

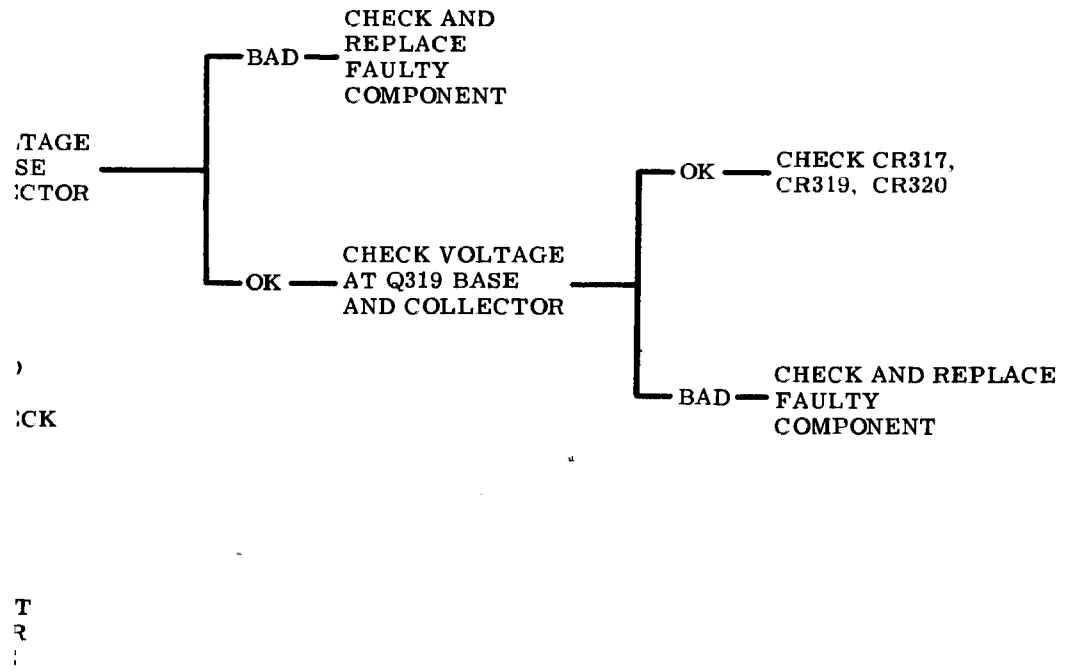

CHECK WAVEFORM AND DC LEVEL A3 T. P. 6

A3 6

TROUBLESHOOTING

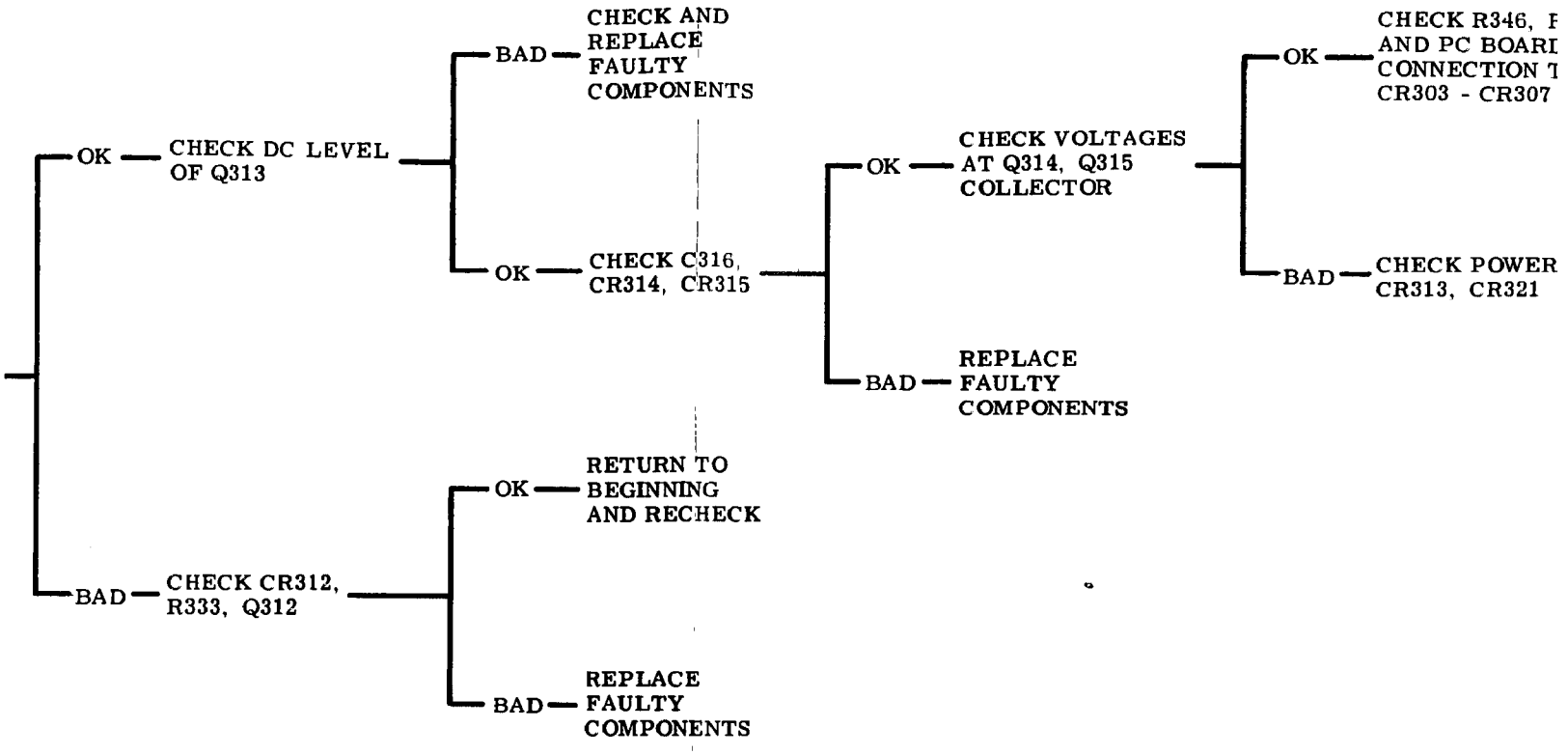

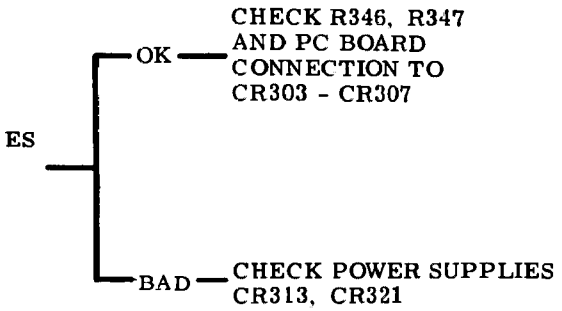

Table 8-4, 8-5. Troubleshooting

SEE INSIDE

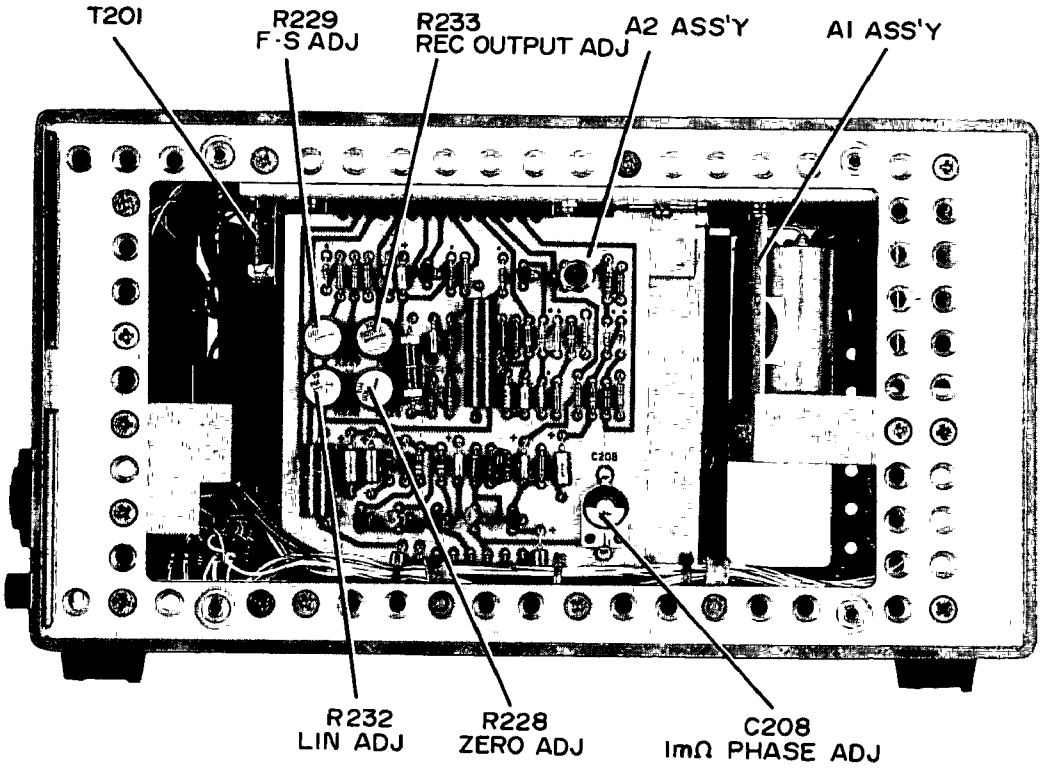

Figure 8-8. Model 4328A Right Internal View

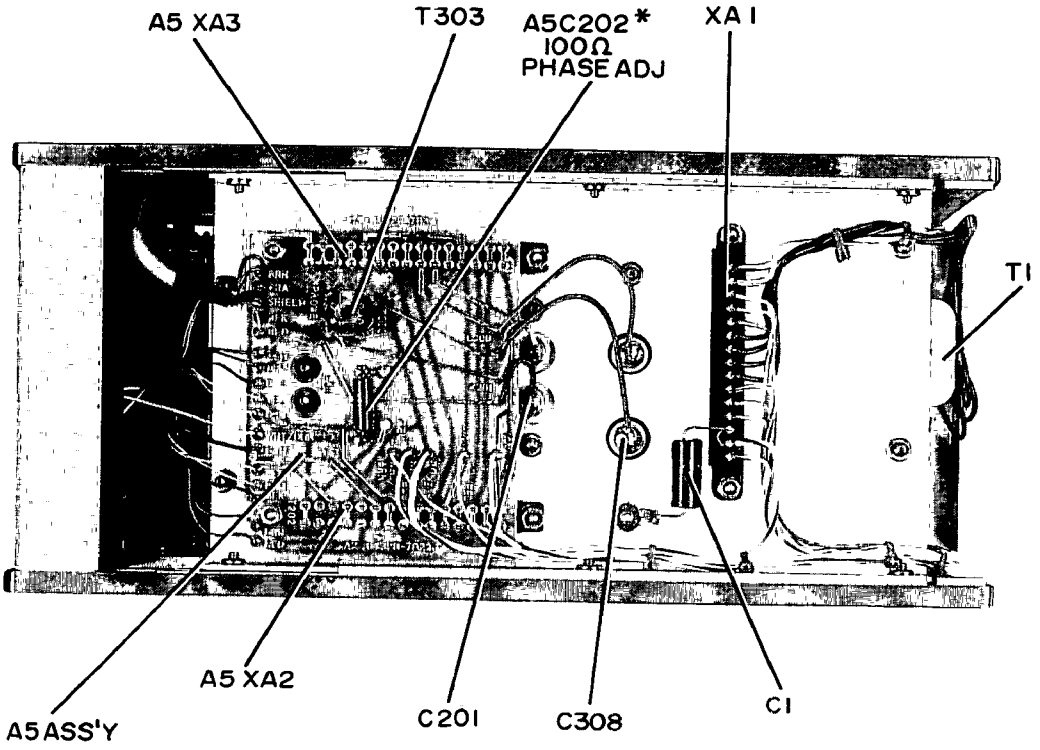

Figure 8-9. Model 4328A Top Internal View

TABLE 8-6
AC AMPLIFIER P/O A2 TROUBLESHOOTING

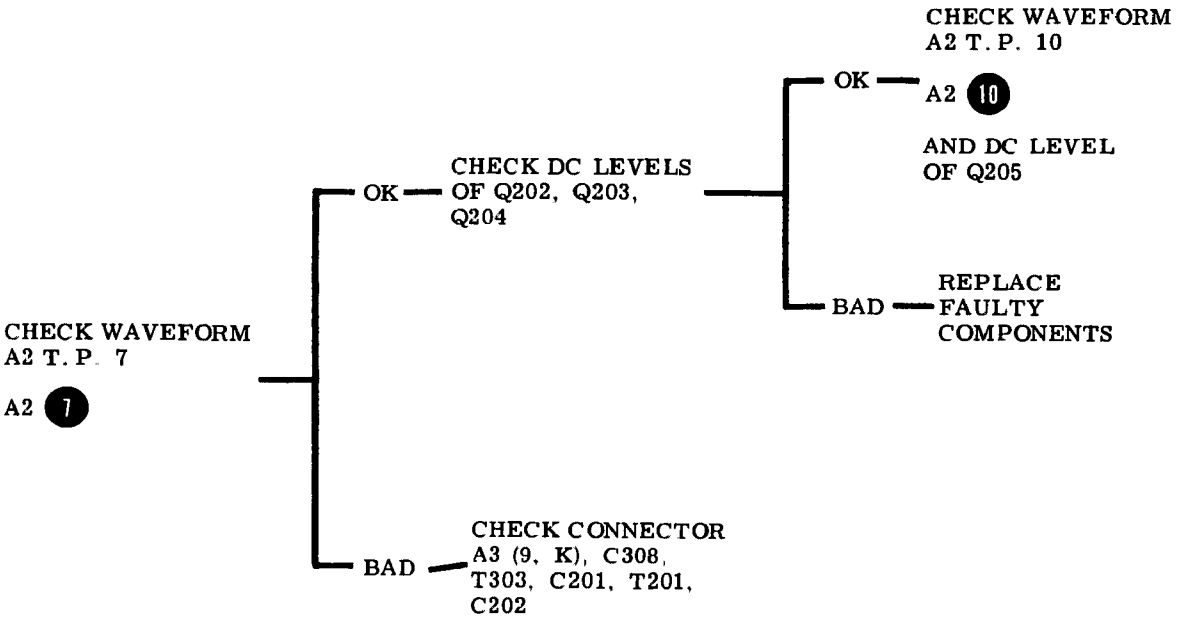

TABLE 8-7
PHASE DETECTOR AND DC AMPLIFIER P/O A2 TROUBLESHOOTING

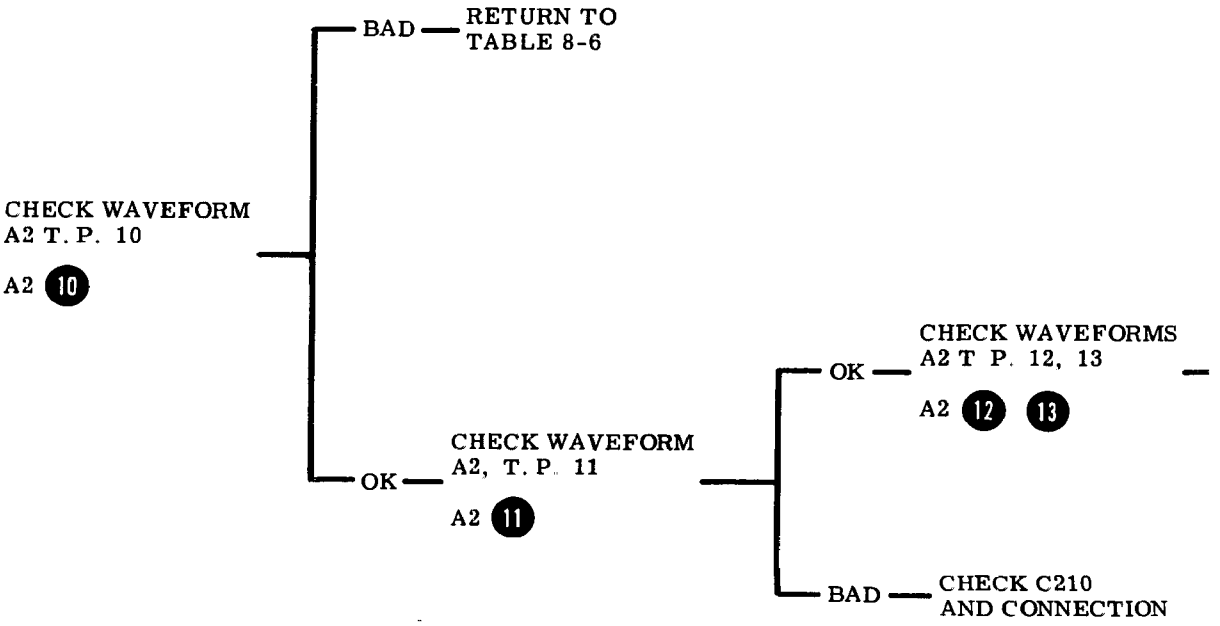

TABLE 8-8
MODULATOR P/O A2 TROUBLESHOOTING

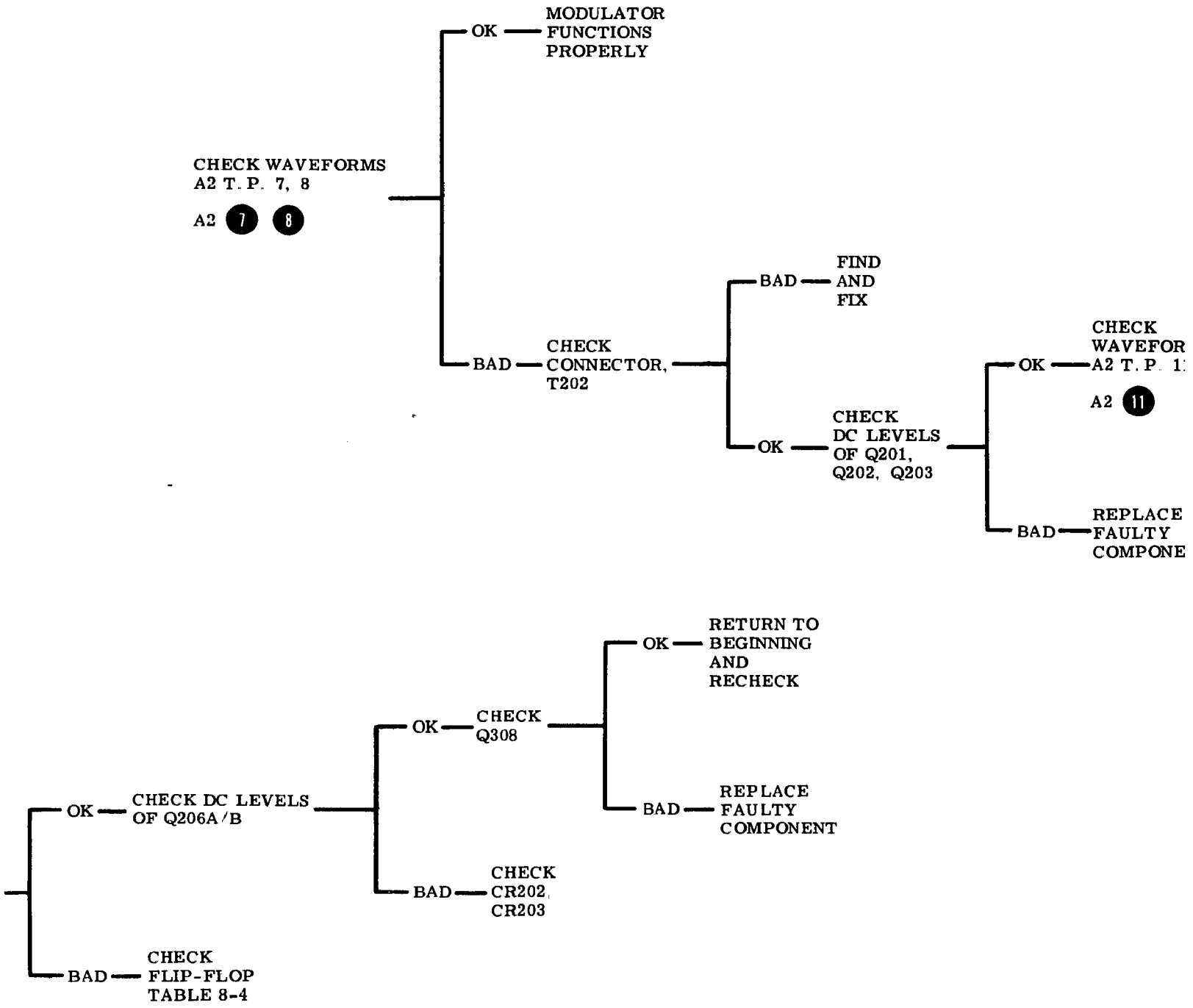

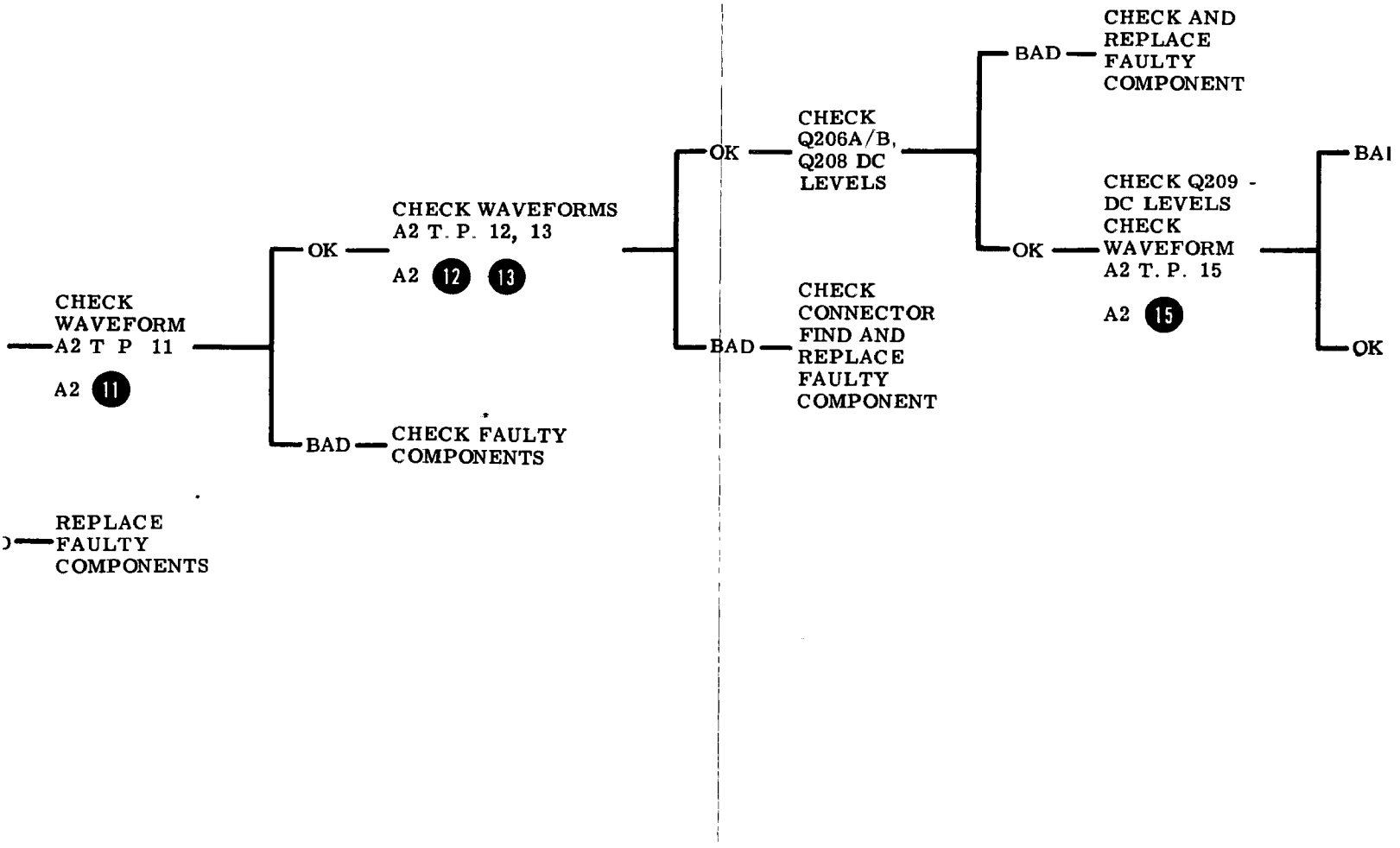
CHECK WAVEFORM A2 T P 11
A2 11
OK
BAD
CHECK WAVEFORMS A2 T. P. 12, 13
A2 12 13
CHECK FAULTY COMPONENTS
REPLACE FAULTY COMPONENTS
OK
BAD
CHECK Q206A/B, Q208 DC LEVELS
CHECK CONNECTOR FIND AND REPLACE FAULTY COMPONENT
BAD
OK
CHECK AND REPLACE FAULTY COMPONENT
CHECK Q209 - DC LEVELS
CHECK WAVEFORM A2 T. P. 15
A2 15
BAI
OK

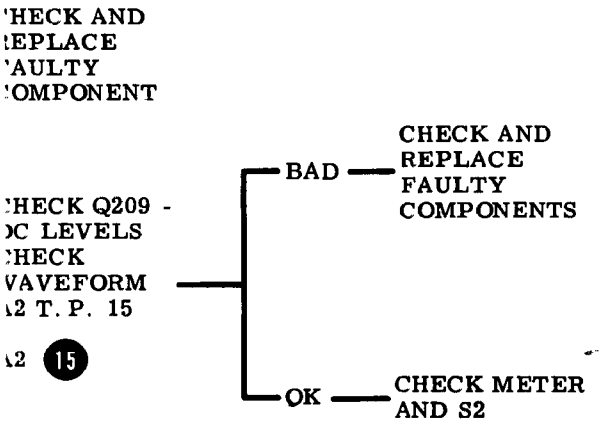

Tables 8-6 through 8-8. Troubleshooting

TABLE
AC AM

CHECK
A2 T. P.

A2 7

TABLE
PHASE

CHECK
A2 T. P

A2 10

SEE INSIDE

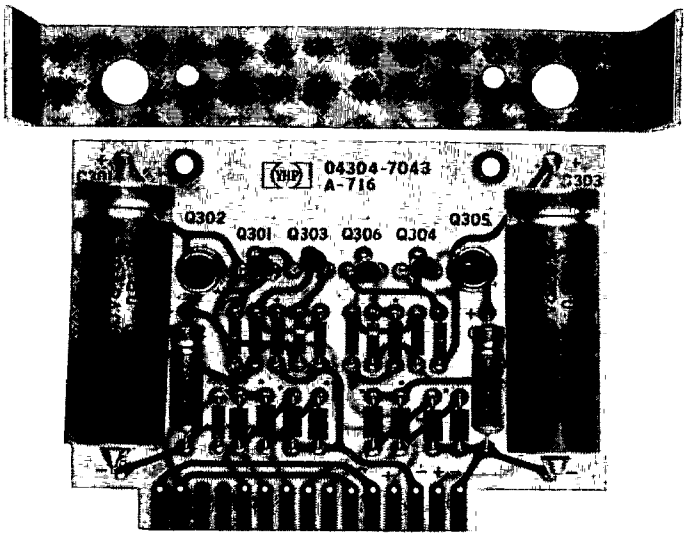

Figure 8-10. Model 4328A Power Supply PC Board

TABLE 8-9
POWER SUPPLY TROUBLESHOOTING

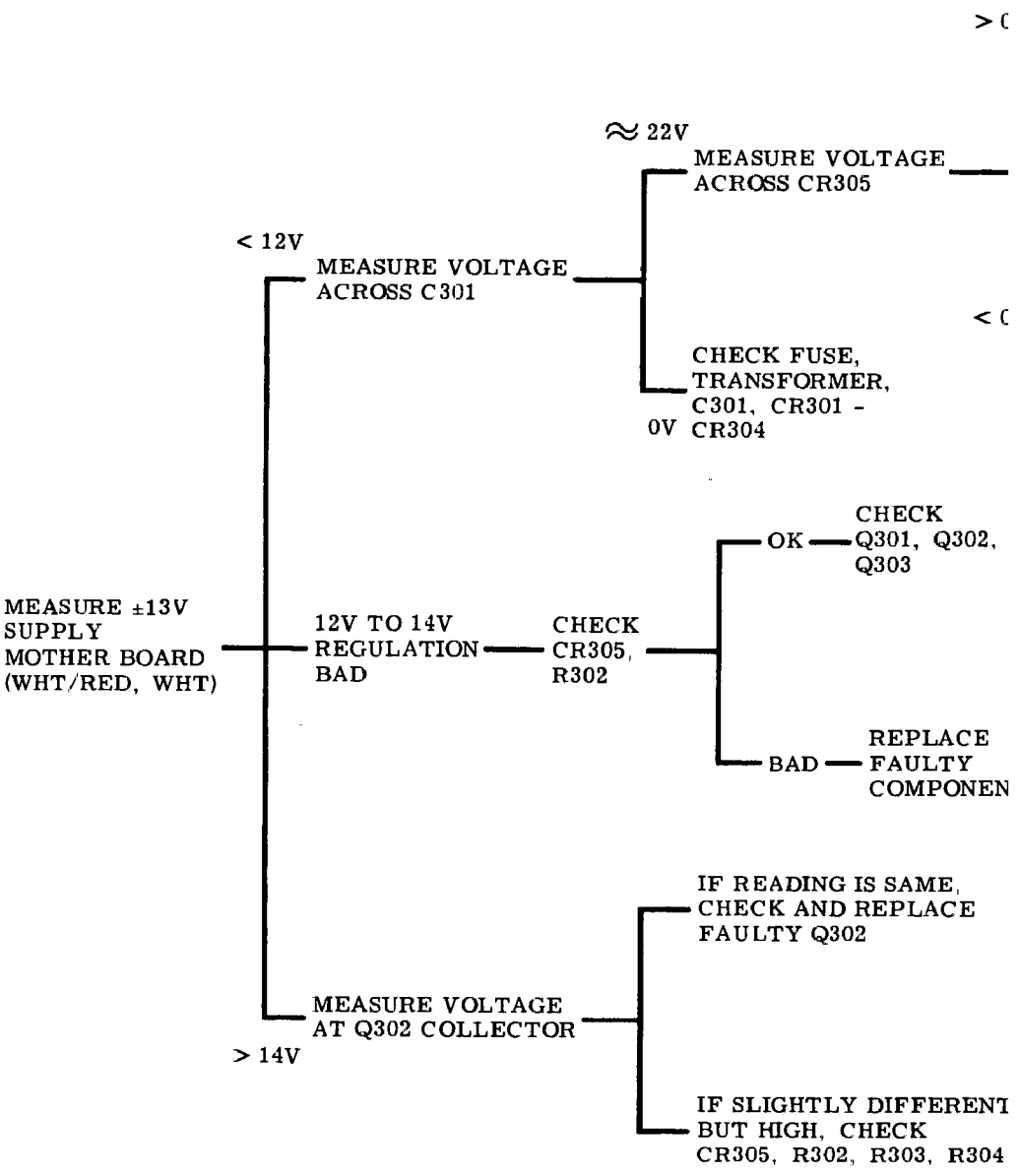

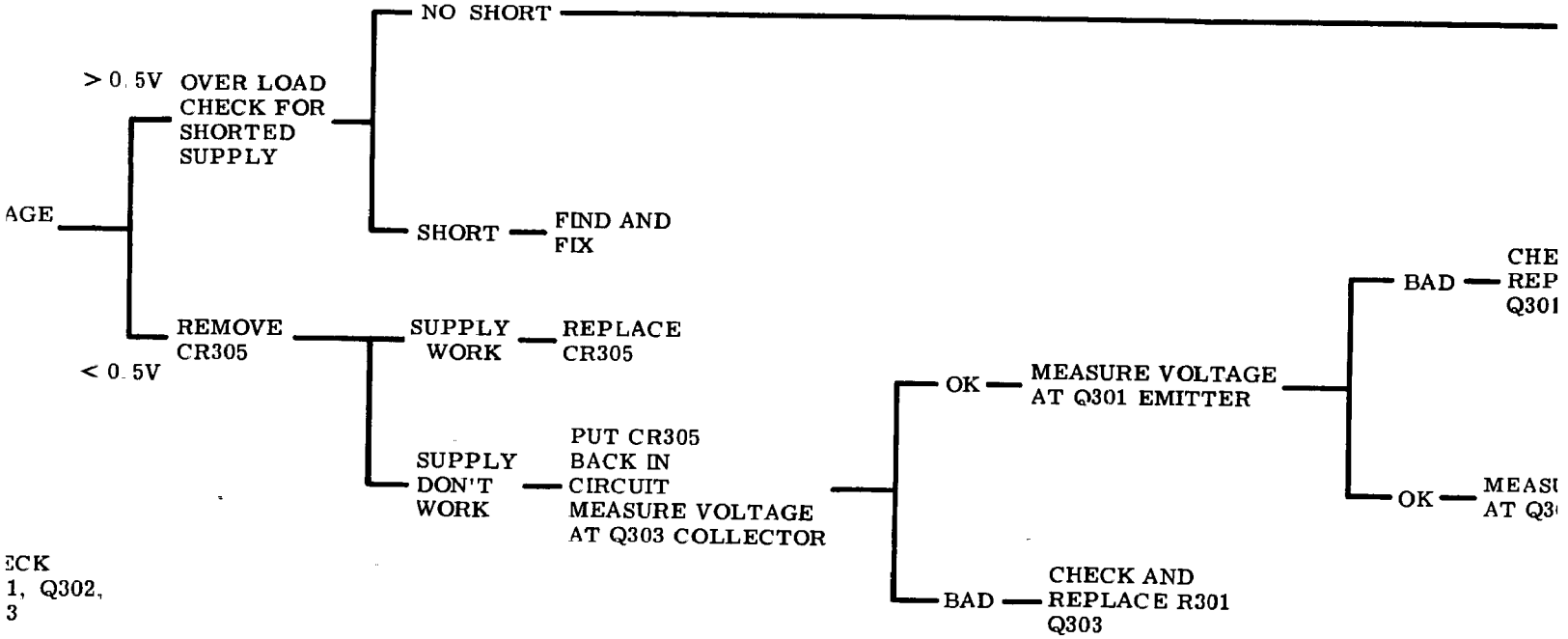

NOTE: SAME FORMAT AS DESCRIBED ABOVE CAN BE USED FOR TROUBLESHOOTING THE -13V POWER SUPPLY

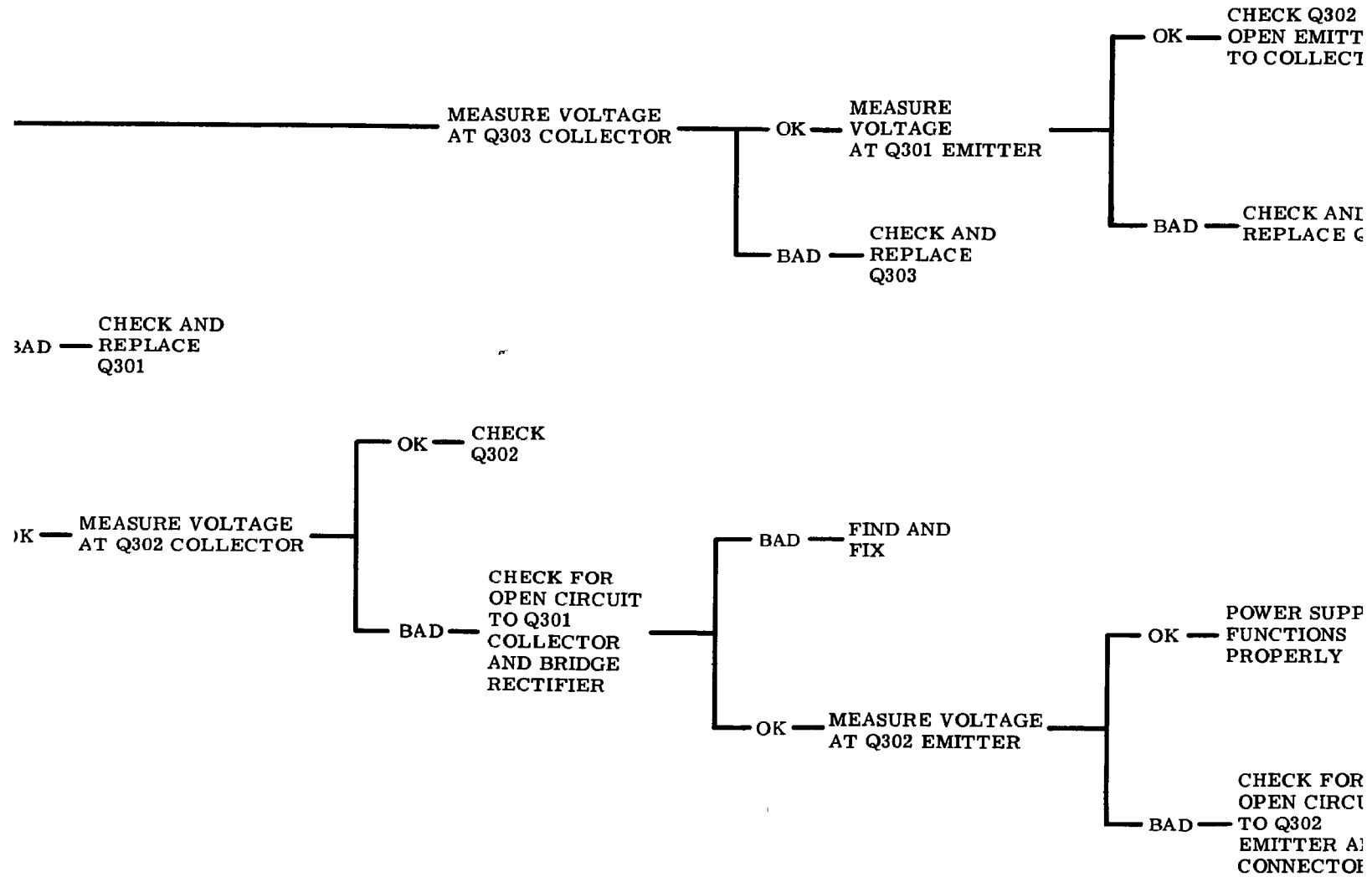

BE USED
SUPPLY

Table 8-9. Pow

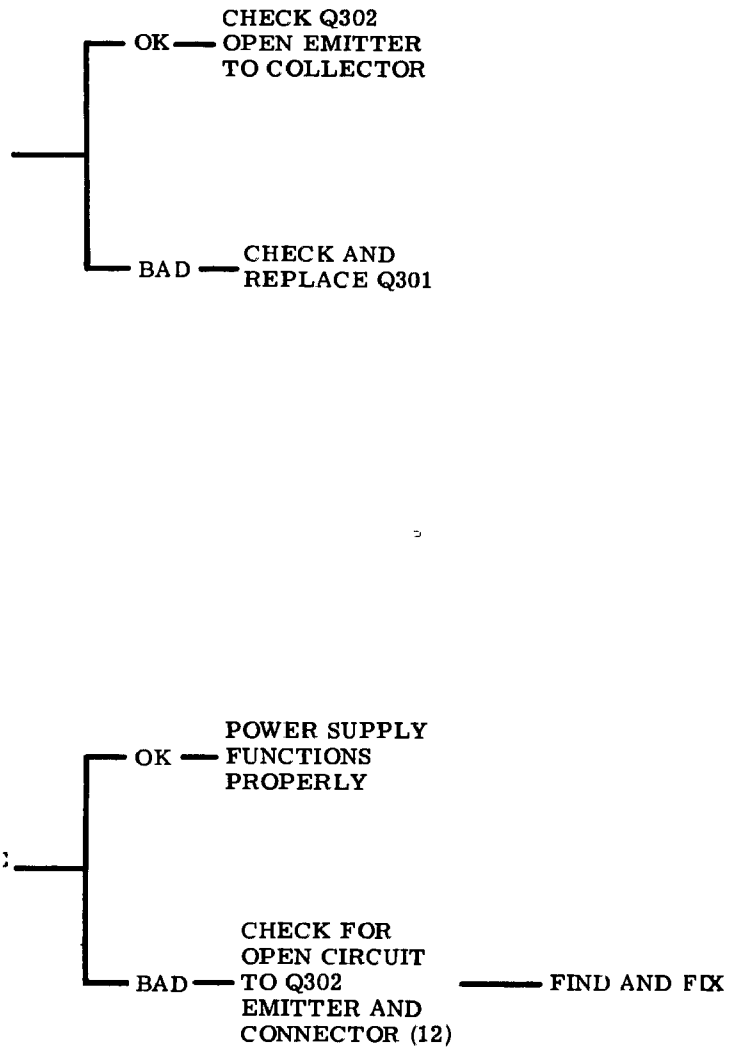

Table 8-9. Power Supply Troubleshooting

SEE INSIDE

Table 8-9
POWER SUPPLY TROUBLESHOOTING

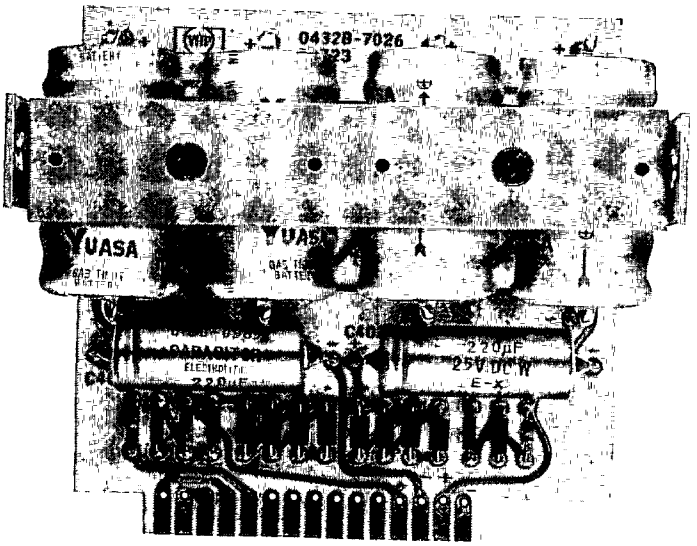

Figure 8-11. Model 4328A Ni-Cd Power Supply PC Board

TABLE 8-10
Ni-Cd POWER SUPPLY TROUBLESHOOTING

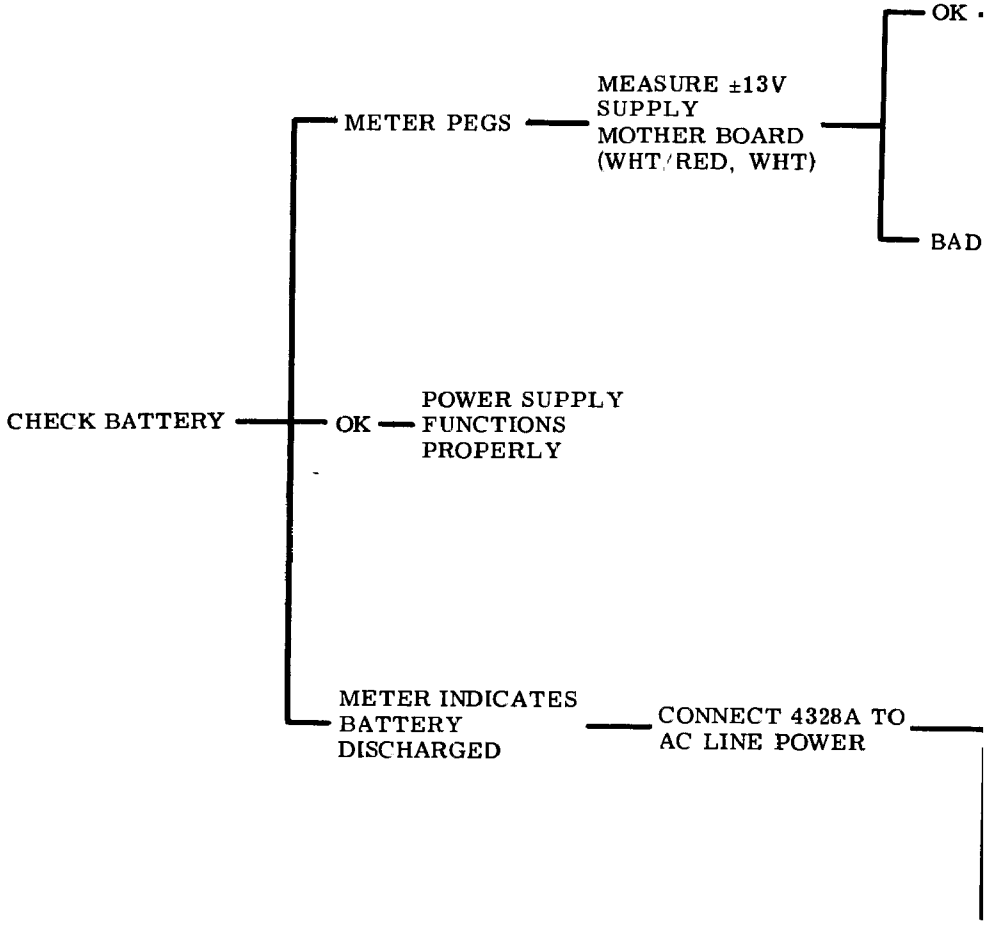

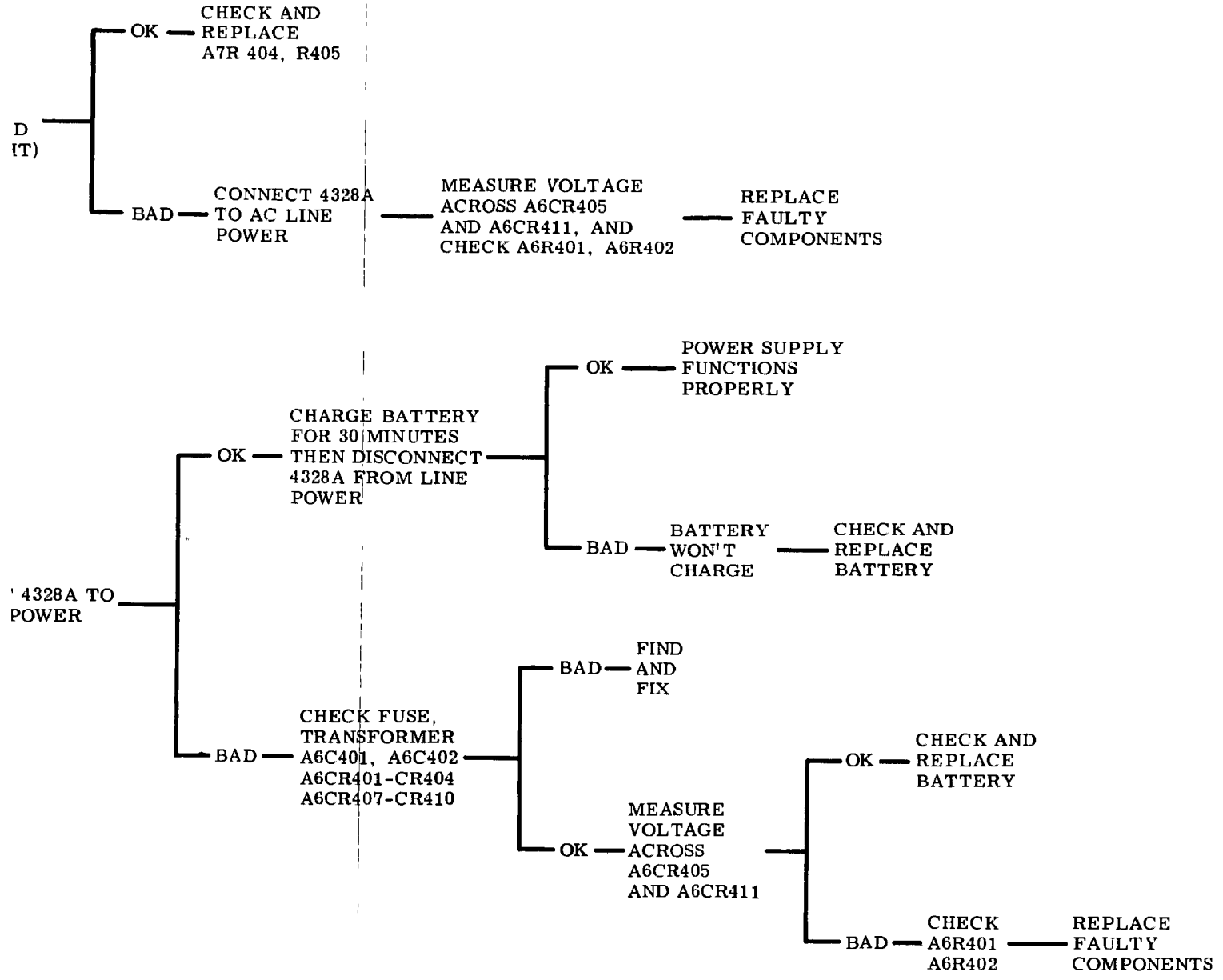

Table 8-10. Ni-Cd Power Supply Troubleshooting

SEE INSIDE

Table 8-10

Ni-Cd POWER SUPPLY TROUBLESHOOTING

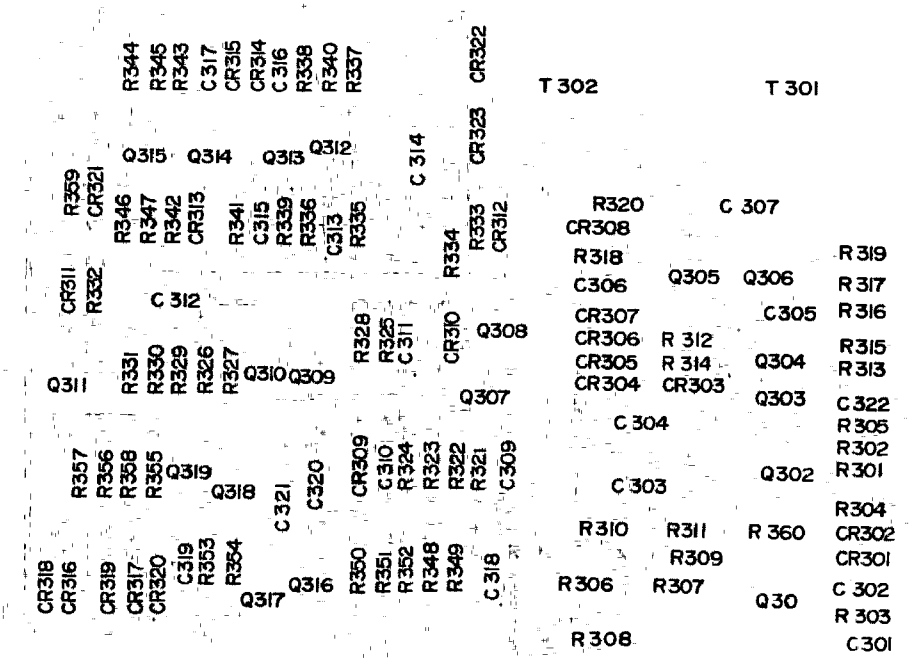

Figure 8-12. Oscillator Assembly A3 Component Locations

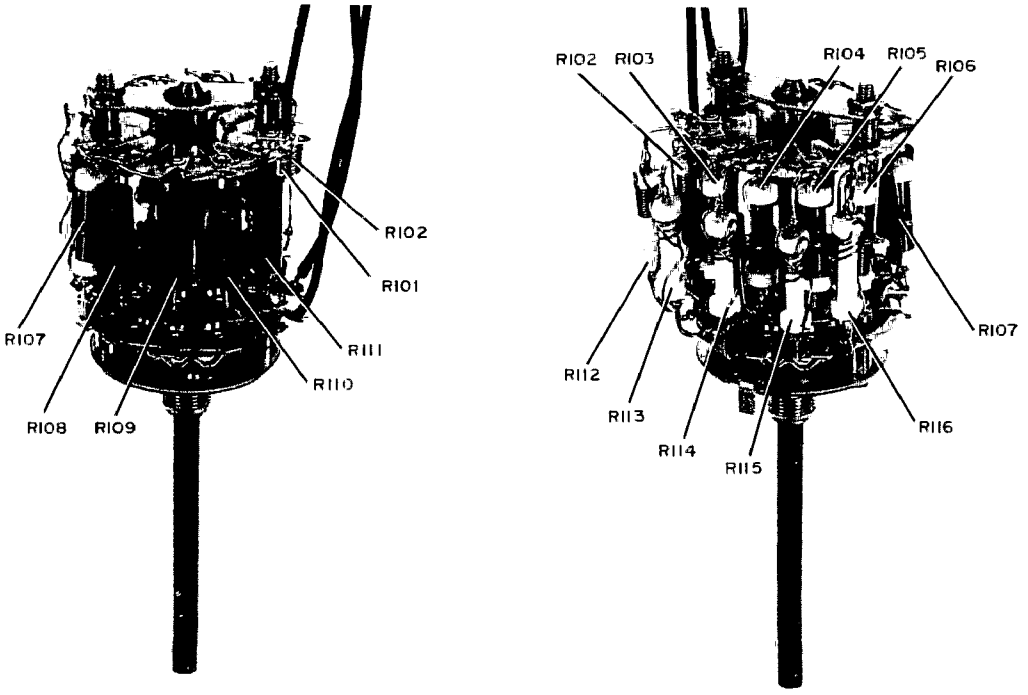

Figure 8-13. Range Switch Assembly A4 Component Locations

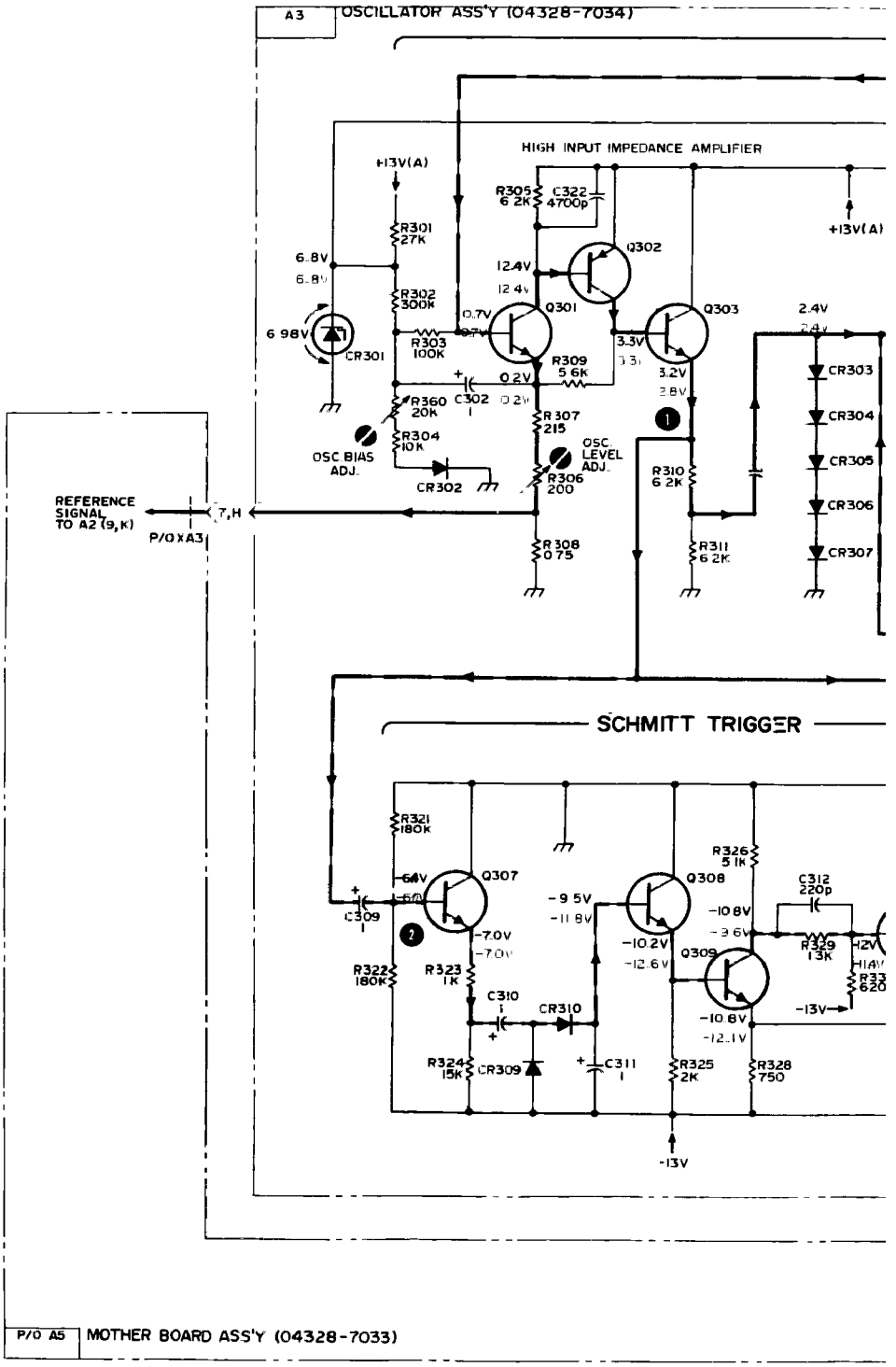
A3 OSCILLATOR ASS'Y (04328-7034)
HIGH INPUT IMPEDANCE AMPLIFIER
+13V(A)
R301 27K
R302 300K
R303 100K
R305 6.2K
C322 4700p
Q302
Q301
Q303
CR301
6.98V
6.8V
12.4V
0.7V
3.3V
3.2V
2.4V
R309 5.6K
C302 1
0.2V
R360 20K
R304 10K
OSC BIAS ADJ.
CR302
R307 215
OSC. LEVEL ADJ.
R306 200
R308 0.75
R310 6.2K
R311 6.2K
CR303
CR304
CR305
CR306
CR307
REFERENCE SIGNAL TO A2 (9,K)
P/O XA3
7,H
SCHMITT TRIGGER
R321 180K
Q307
-6.4V
C309 1
-7.0V
R322 180K
R323 1K
C310 1
CR310
R324 15K
CR309
C311 1
-9.5V
-11.8V
Q308
-10.2V
-12.6V
Q309
-10.8V
-12.1V
R325 2K
R328 750
R326 5.1K
C312 220p
-10.8V
-13V
-13V
P/O A5 MOTHER BOARD ASS'Y (04328-7033)

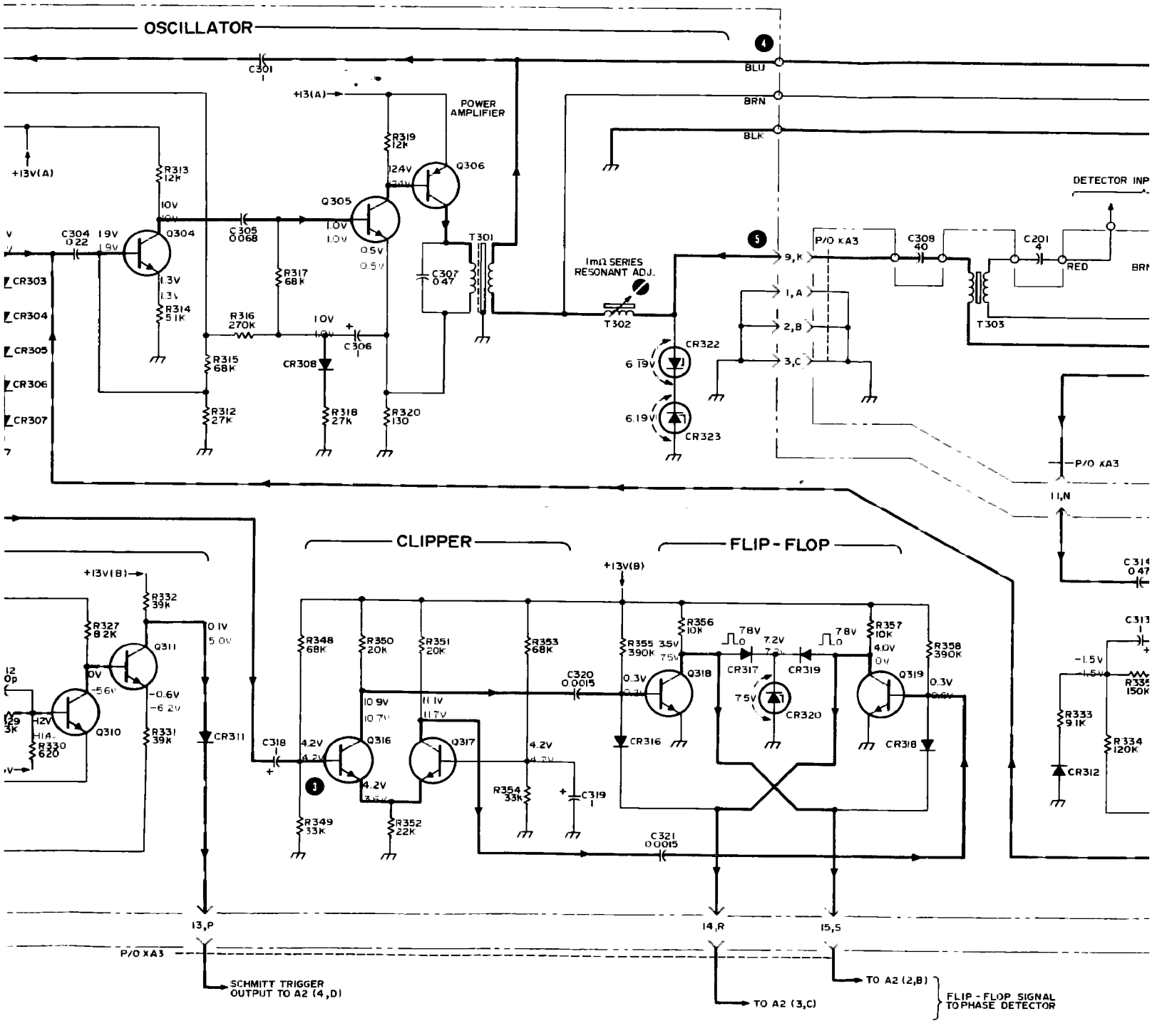
OSCILLATOR
CLIPPER
FLIP-FLOP
POWER AMPLIFIER
1mΩ SERIES RESONANT ADJ.
DETECTOR INP
P/O XA3
SCHMITT TRIGGER OUTPUT TO A2 (4,D)
TO A2 (3,C)
TO A2 (2,B)
FLIP-FLOP SIGNAL TO PHASE DETECTOR
BLU
BRN
BLK
RED
+13V(A)
+13V(B)
Q304
Q305
Q306
Q310
Q311
Q316
Q317
Q318
Q319
T301
T302
T303
CR303
CR304
CR305
CR306
CR307
CR308
CR311
CR312
CR316
CR317
CR318
CR319
CR320
CR322
CR323
C301
C304 0.22
C305 0.068
C306
C307 0.47
C308 40
C201 4
C318
C319
C320 0.0015
C321 0.0015
R313 12K
R314 51K
R315 68K
R316 270K
R317 68K
R318 27K
R319 12K
R320 130
R312 27K
R313 12K
R314 51K
R315 68K
R316 270K
R317 68K
R318 27K
R319 12K
R320 130
R327 8.2K
R330 620
R331 39K
R332 39K
R333 9.1K
R334 120K
R335 150K
R348 68K
R349 33K
R350 20K
R351 20K
R352 22K
R353 68K
R354 33K
R355 390K
R356 10K
R357 10K
R358 390K
9,K
1,A
2,B
3,C
11,N
13,P
14,R
15,S

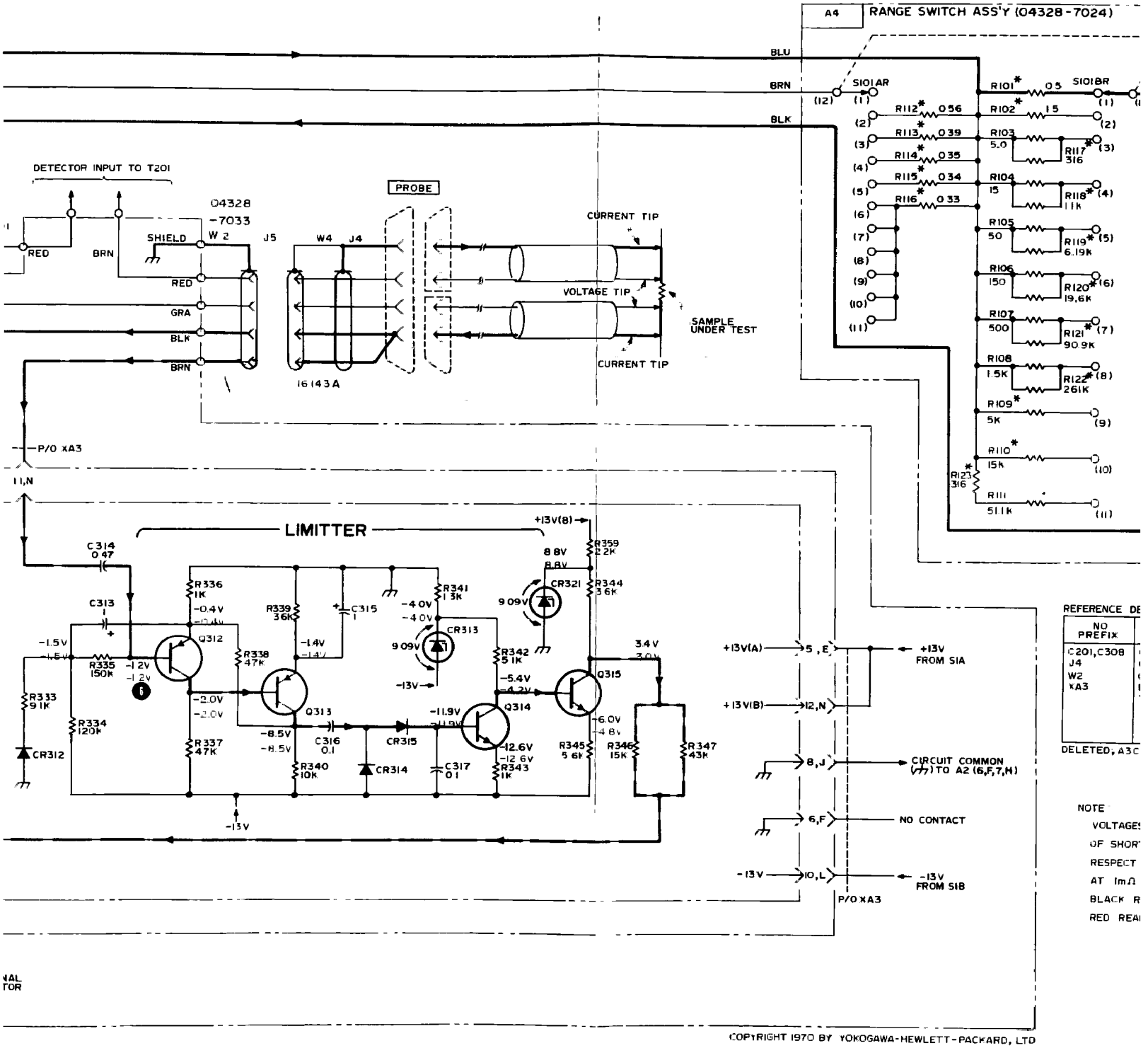
A4 RANGE SWITCH ASS'Y (04328-7024)
BLU
BRN
BLK
SIO1AR
SIO1BR
R101* 0.5
R102* 1.5
R103 5.0
R104 15
R105 50
R106 150
R107 500
R108 1.5K
R109* 5K
R110* 15K
R111 51.1K
R112* 0.56
R113* 0.39
R114* 0.35
R115* 0.34
R116* 0.33
R117* 316
R118* 1.1K
R119* 6.19K
R120* 19.6K
R121* 90.9K
R122* 261K
R123* 316
DETECTOR INPUT TO T201
04328-7033
SHIELD
RED
BRN
GRA
BLK
W2
J5
W4
J4
PROBE
16143A
CURRENT TIP
VOLTAGE TIP
SAMPLE UNDER TEST
P/O XA3
LIMITTER
+13V(8)
C314 0.47
C313 1
R336 1K
R339 36K
C315 1
R341 1.3K
R359 2.2K
R344 36K
CR321
CR313
R342 5.1K
R335 150K
R338 47K
R333 9.1K
R334 120K
R337 47K
R340 10K
C316 0.1
CR315
CR314
C317 0.1
R343 1K
R345 5.6K
R346 15K
R347 43K
Q312
Q313
Q314
Q315
CR312
-13V
+13V(A)
+13V(B)
5,E
12,N
8,J
6,F
10,L
+13V FROM S1A
CIRCUIT COMMON (⏚) TO A2 (6,F,7,H)
NO CONTACT
-13V FROM S1B
P/O XA3
REFERENCE DE
NO PREFIX
C201,C308
J4
W2
XA3
DELETED, A3C
NOTE
VOLTAGES
OF SHORT
RESPECT
AT 1mΩ
BLACK R
RED REA
COPYRIGHT 1970 BY YOKOGAWA-HEWLETT-PACKARD, LTD

Figure 8-

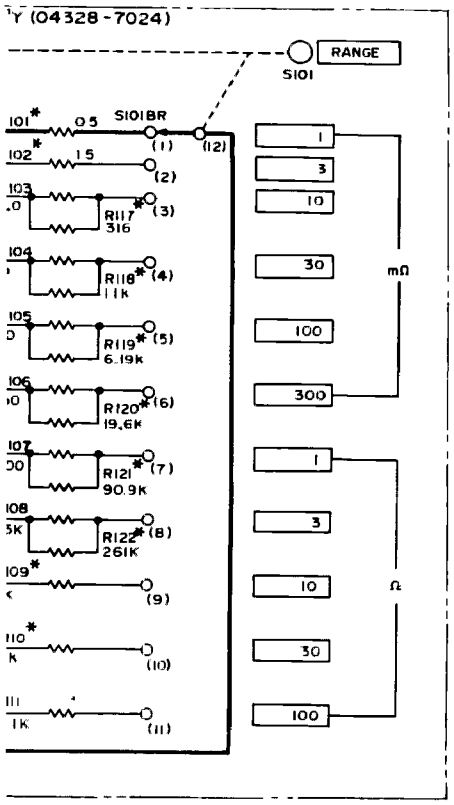

REFERENCE DESIGNATIONS

NO PREFIX	A3 ASS'Y	A4 ASS'Y	A5 ASS'Y
C201,C308 J4 W2 XA3	C301-C322 CR301-CR323 Q301-Q319 R301-R360 T301,T302	R101-R122 S101	T303

DELETED; A3C308

NOTE

VOLTAGES OBTAINED UNDER CONDITIONS OF SHORTED AND OPEN PROBES WITH RESPECT TO COMMON (⏚). RANGE SET AT 1mΩ

BLACK READING FOR SHORTED

RED READING FOR OPEN

Figure 8-14. Oscillator Ass'y A3
Range Switch Ass'y A4
Mother Board Ass'y A5

Figure 8-14
OSCILLATOR ASS'Y A3
RANGE SWITCH ASS'Y A4
MOTHER BOARD ASS'Y A5

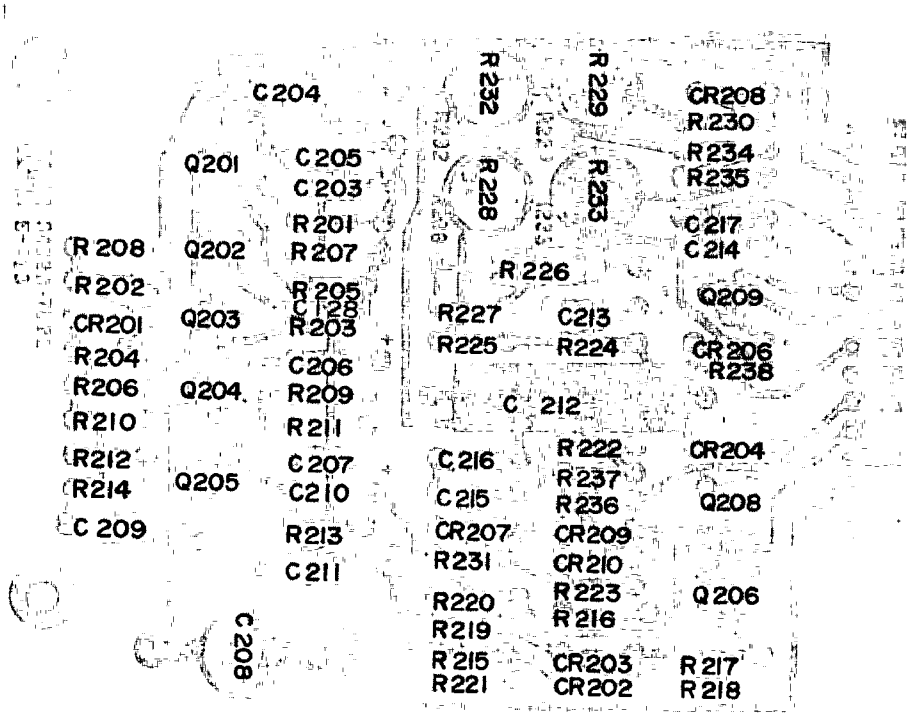

Figure 8-15. Phase Sensitive Amplifier Assembly A2
Component Locations

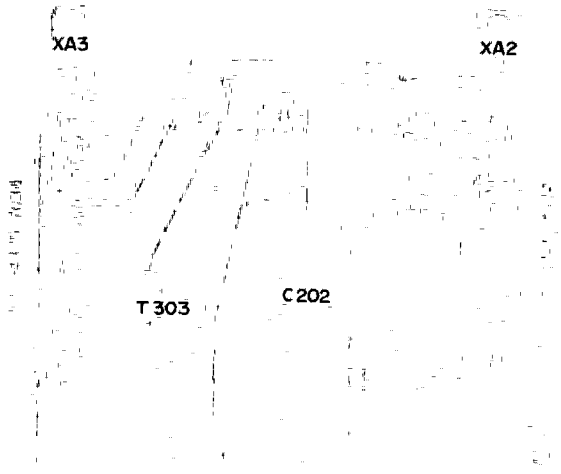

Figure 8-16. Mother Board Assembly A5
Component Locations

REFERENCE DESIGNATIONS

NO PREFIX	A2 ASS'Y	A5 ASS'Y
C2,C201 C308 J2,J4 M101 T201 W2	C203-C217 CR201-CR210 Q201-Q209 R201-R238 T202	C202 T303 XA2

DELETED; A2CR205, A2Q207

NOTE

VOLTAGES OBTAINED UNDER CONDITIONS OF SHORTED AND OPEN PROBES WITH RESPECT TO COMMON (⏚) RANGE SET AT 1mΩ

BLACK READING FOR SHORTED

RED READING FOR OPEN

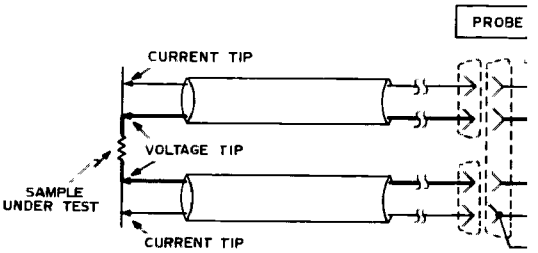

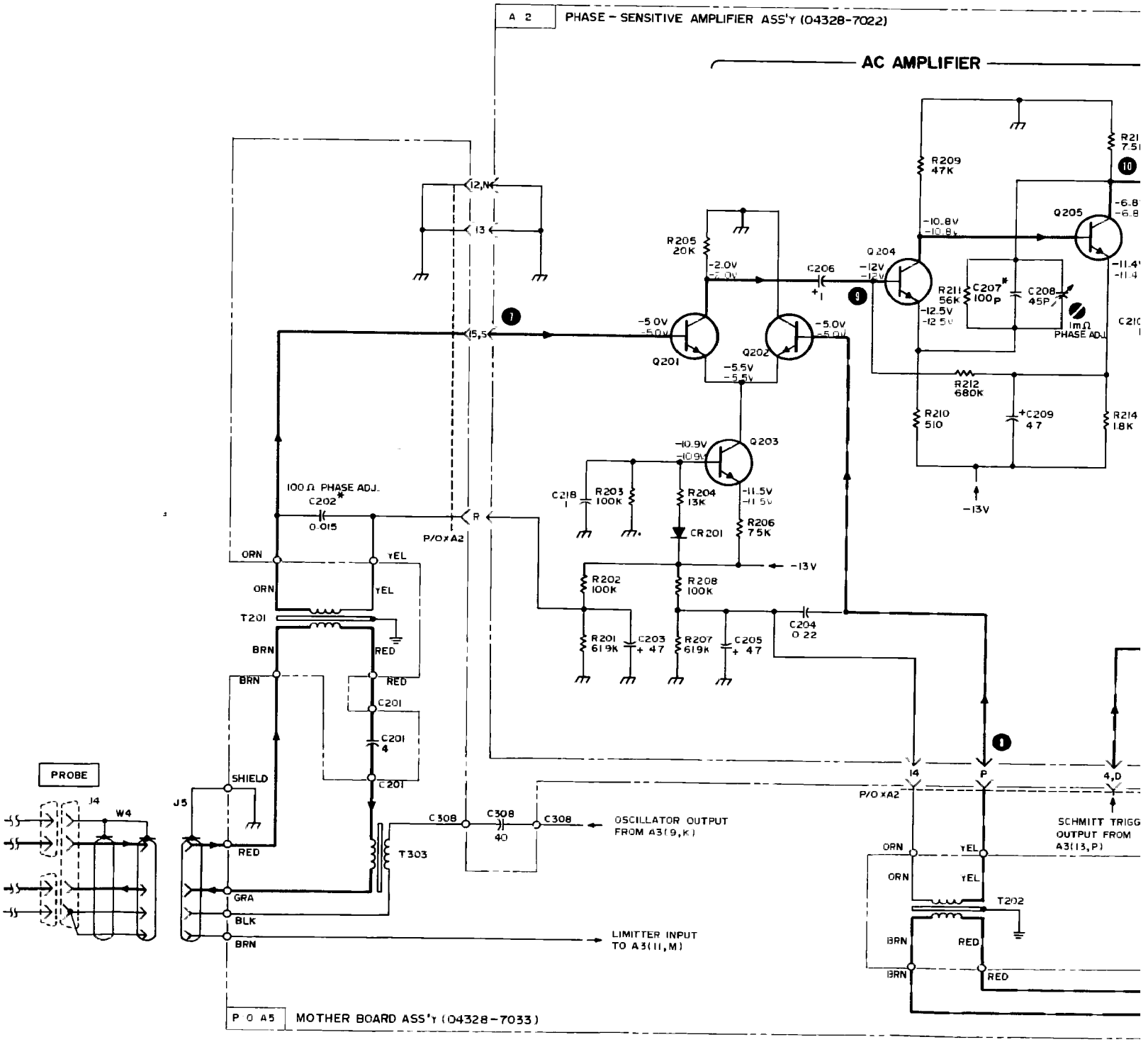
A 2
PHASE - SENSITIVE AMPLIFIER ASS'Y (04328-7022)
AC AMPLIFIER
R209 47K
R205 20K
-2.0V
C206 +1
Q204
-12V
Q205
-10.8V
R211 56K
C207* 100P
C208 45P
-12.5V
1mΩ PHASE ADJ.
-5.0V
Q201
Q202
-5.5V
R212 680K
R210 510
+C209 47
R214 1.8K
-13V
Q203
-10.9V
C218 1
R203 100K
R204 13K
-11.5V
R206 75K
CR201
R202 100K
R208 100K
R201 619K
C203 + 47
R207 619K
C205 + 47
C204 0.22
100Ω PHASE ADJ.
C202* 0.015
P/O A2
ORN
YEL
T201
BRN
RED
C201
C201 4
C201
SHIELD
PROBE
J4
W4
J5
C308
C308 40
C308
OSCILLATOR OUTPUT FROM A3(9,K)
T303
GRA
BLK
LIMITTER INPUT TO A3(11,M)
J4
P
4,D
SCHMITT TRIGG OUTPUT FROM A3(13,P)
T202
P O A5
MOTHER BOARD ASS'Y (04328-7033)

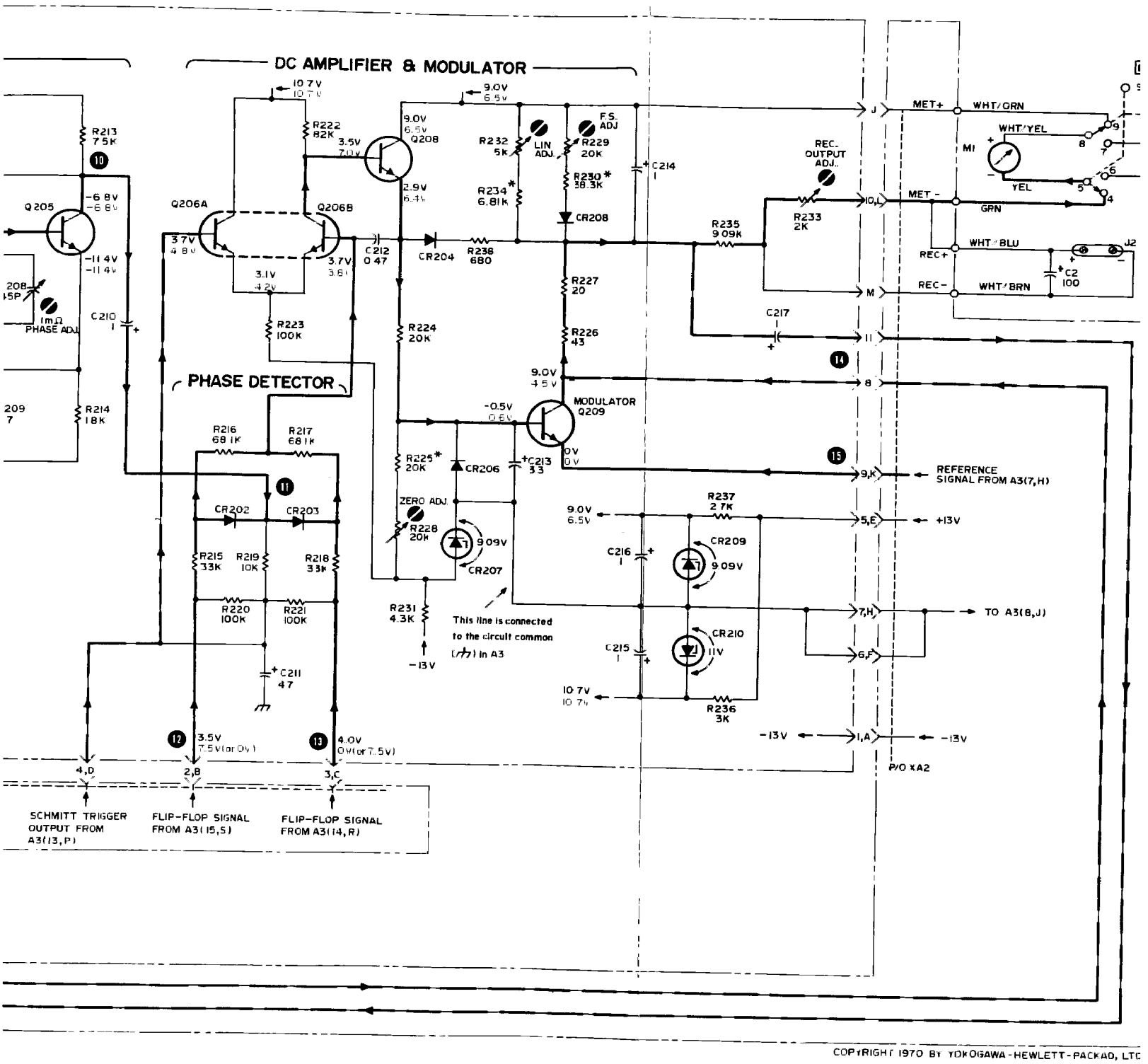

Figure 8-17 Phase

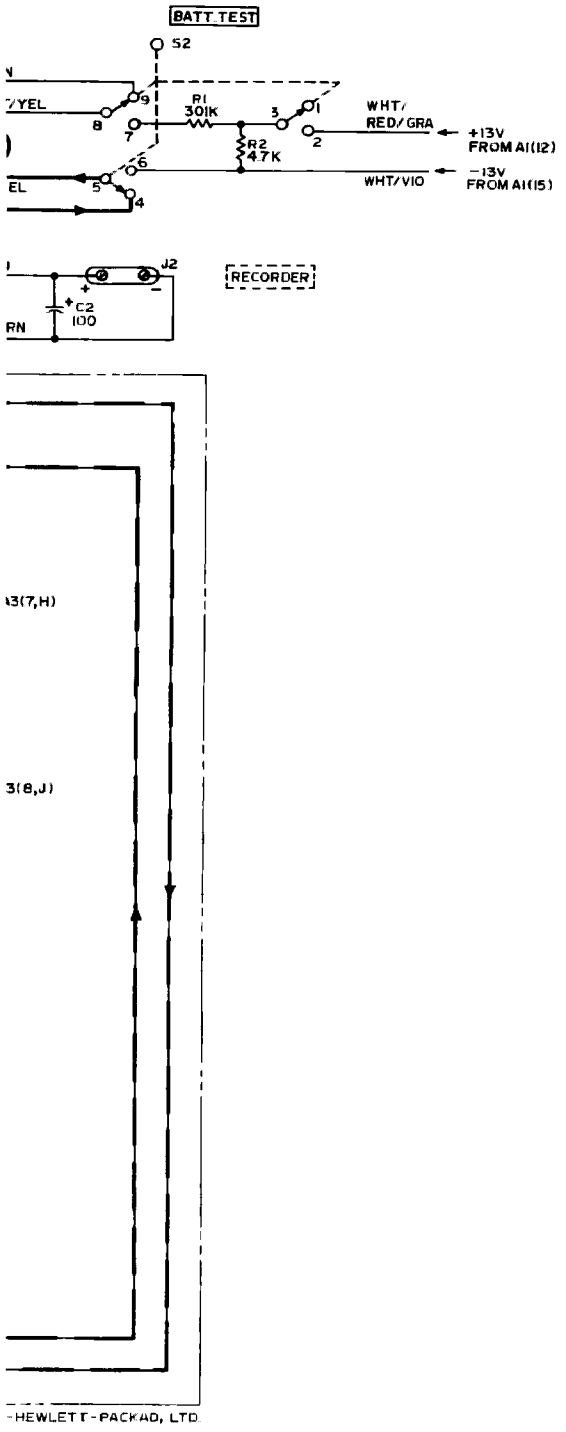

Figure 8-17 Phase Sensitive Amplifier Ass'y A2
Mother Board Ass'y A5

SEE INSIDE

Figure 8-17

PHASE SENSITIVE AMPLIFIER ASS'Y A2
MOTHER BOARD ASS'Y A5

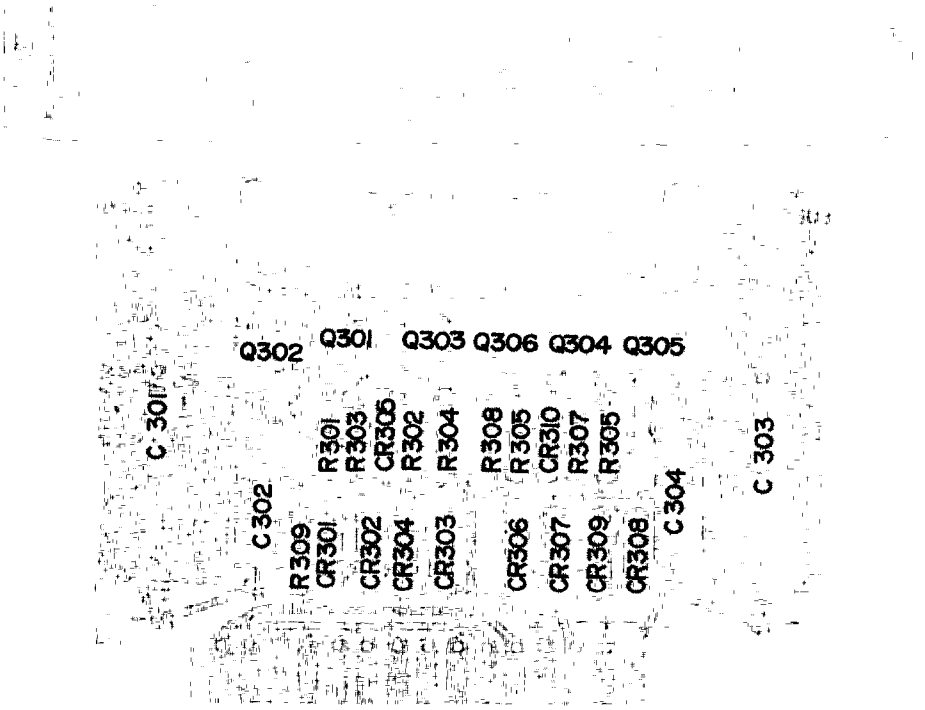

Figure 8-18 Power Supply Assembly A1 Component Locations

REFERENCE DESIGNATIONS

NO PREFIX	A1 ASS'Y	A5 ASS'Y
C1 DS1 F1 J1 MIO1 S3 T1 W1 *A1	C301-C304 CR301-CR310 Q301-Q306 R301-R309	

DELETED;

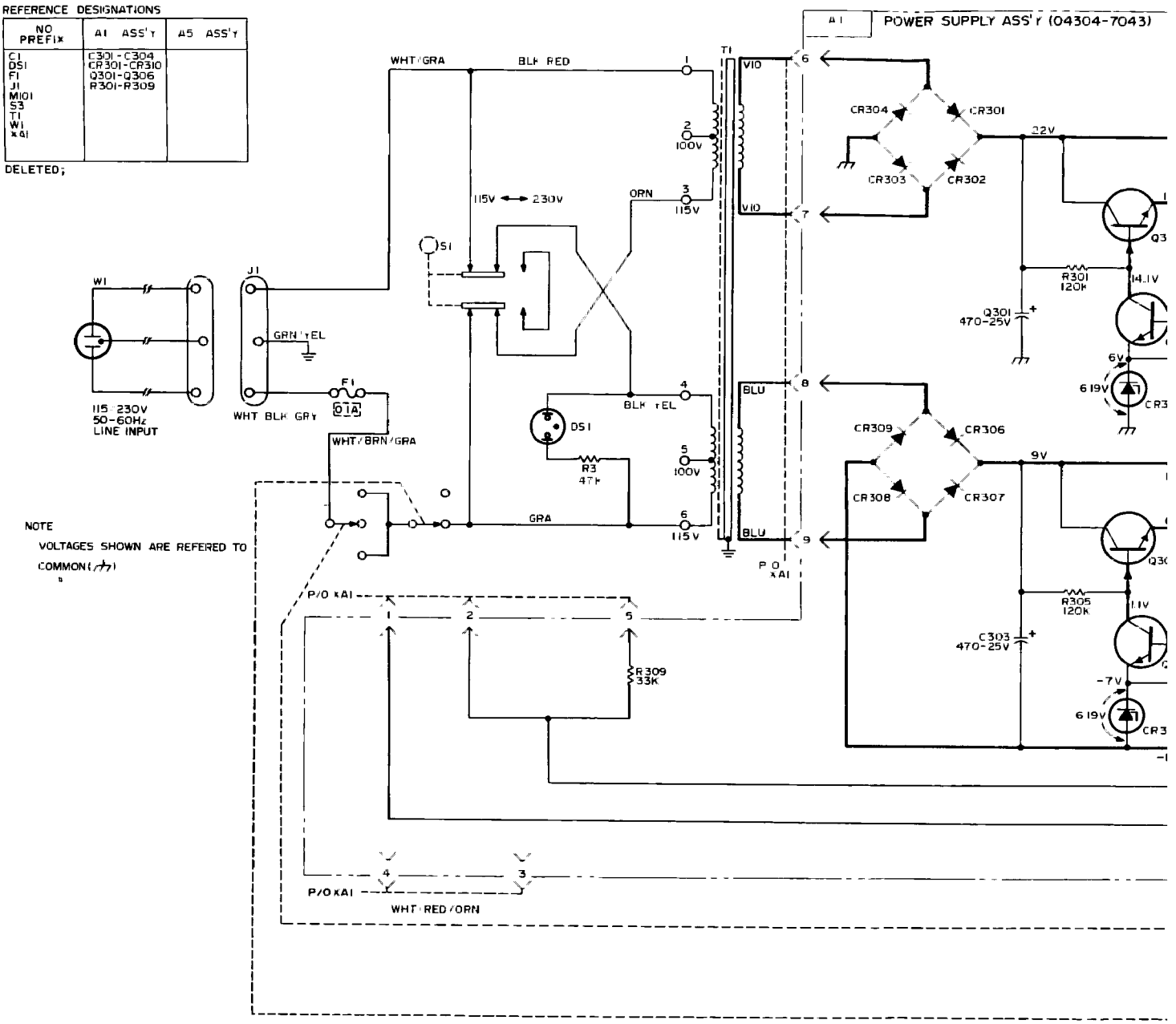

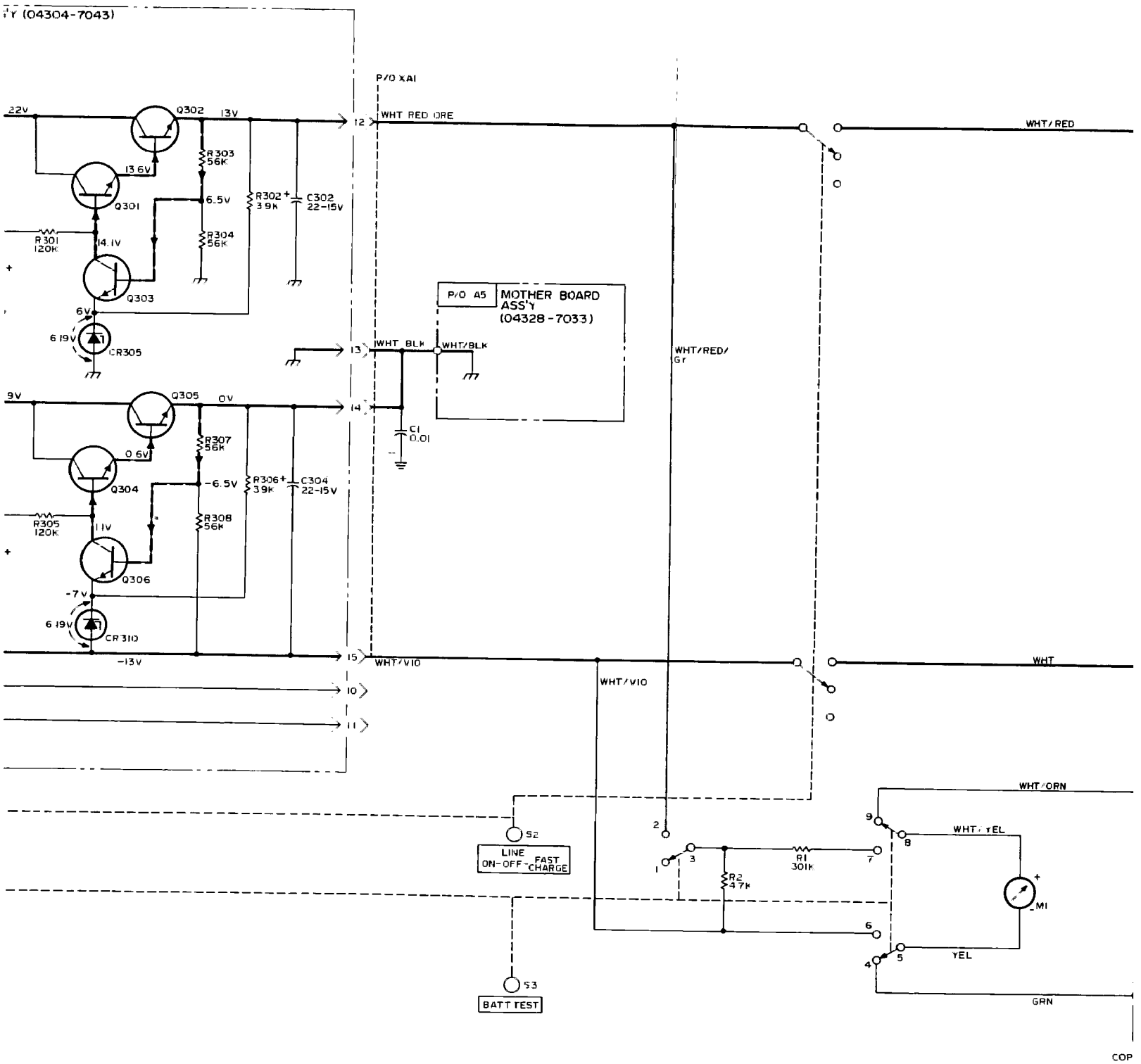
Y (04304-7043)
P/O XA1
22V
Q302
13V
12
WHT RED ORE
WHT/RED
13.6V
Q301
R303
56K
6.5V
R302
3.9K
C302
22-15V
R301
120K
14.1V
R304
56K
Q303
6V
6.19V
CR305
P/O A5
MOTHER BOARD
ASS'Y
(04328-7033)
13
WHT BLK
WHT/BLK
WHT/RED/
Gr
9V
Q305
0V
14
C1
0.01
0.6V
Q304
R307
56K
-6.5V
R306
3.9K
C304
22-15V
R305
120K
1.1V
R308
56K
Q306
-7V
6.19V
CR310
-13V
15
WHT/V10
WHT
WHT/V10
10
11
WHT/ORN
9
WHT/YEL
8
S2
LINE
ON-OFF-FAST
CHARGE
2
1
3
7
R1
301K
R2
4.7K
+
MI
-
6
5
4
YEL
GRN
S3
BATT TEST
COP

Figu

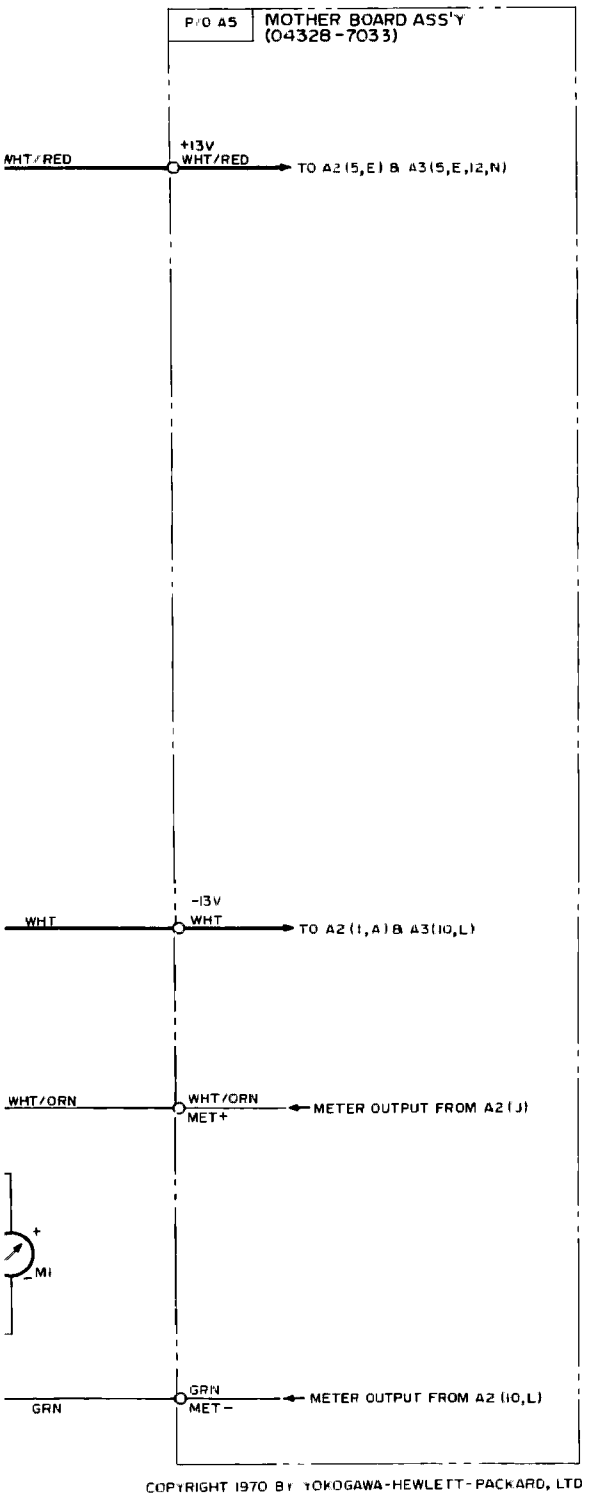

Figure 8-19 Power Supply Ass'y A1
Mother Board Ass'y A5

SEE INSIDE

Figure 8-19

POWER SUPPLY ASS'Y A1
MOTHER BOARD ASS'Y A5

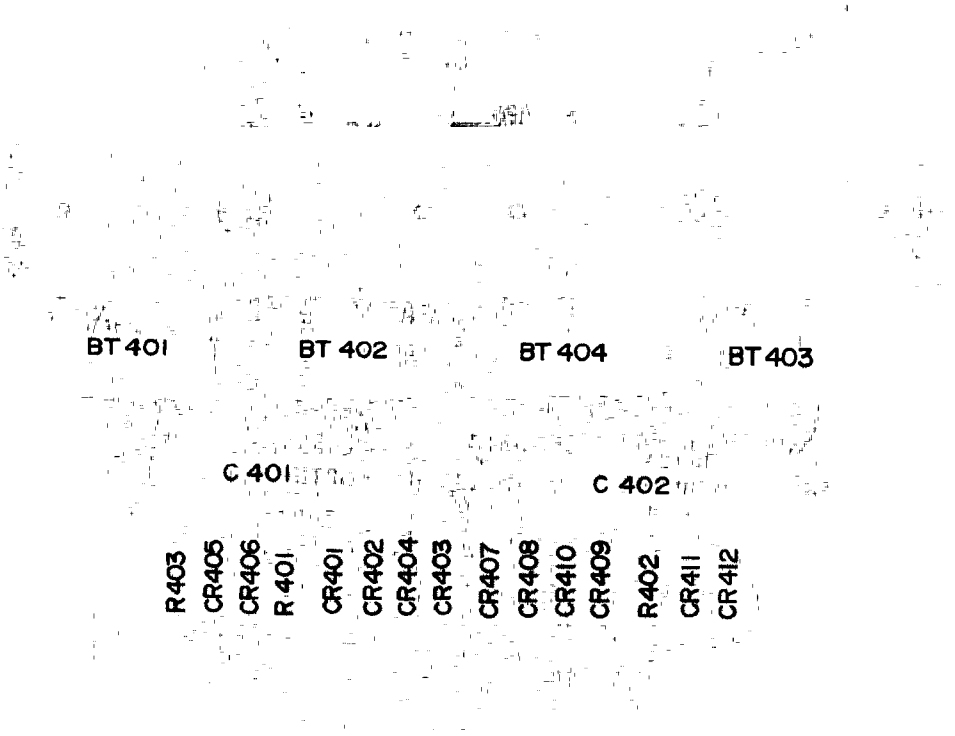

Figure 8-20 Ni-Cd Power Supply Assembly A6 Component Locations

REFERENCE DESIGNATIONS

NO PREFIX	A5 ASS'Y	A6 ASS'Y
C1		C401, C402
DS1		CR401-CR412
F1		R401-R403
J1		
MIO1		
S3		
T1		
W1		
*A1		

DELETED,

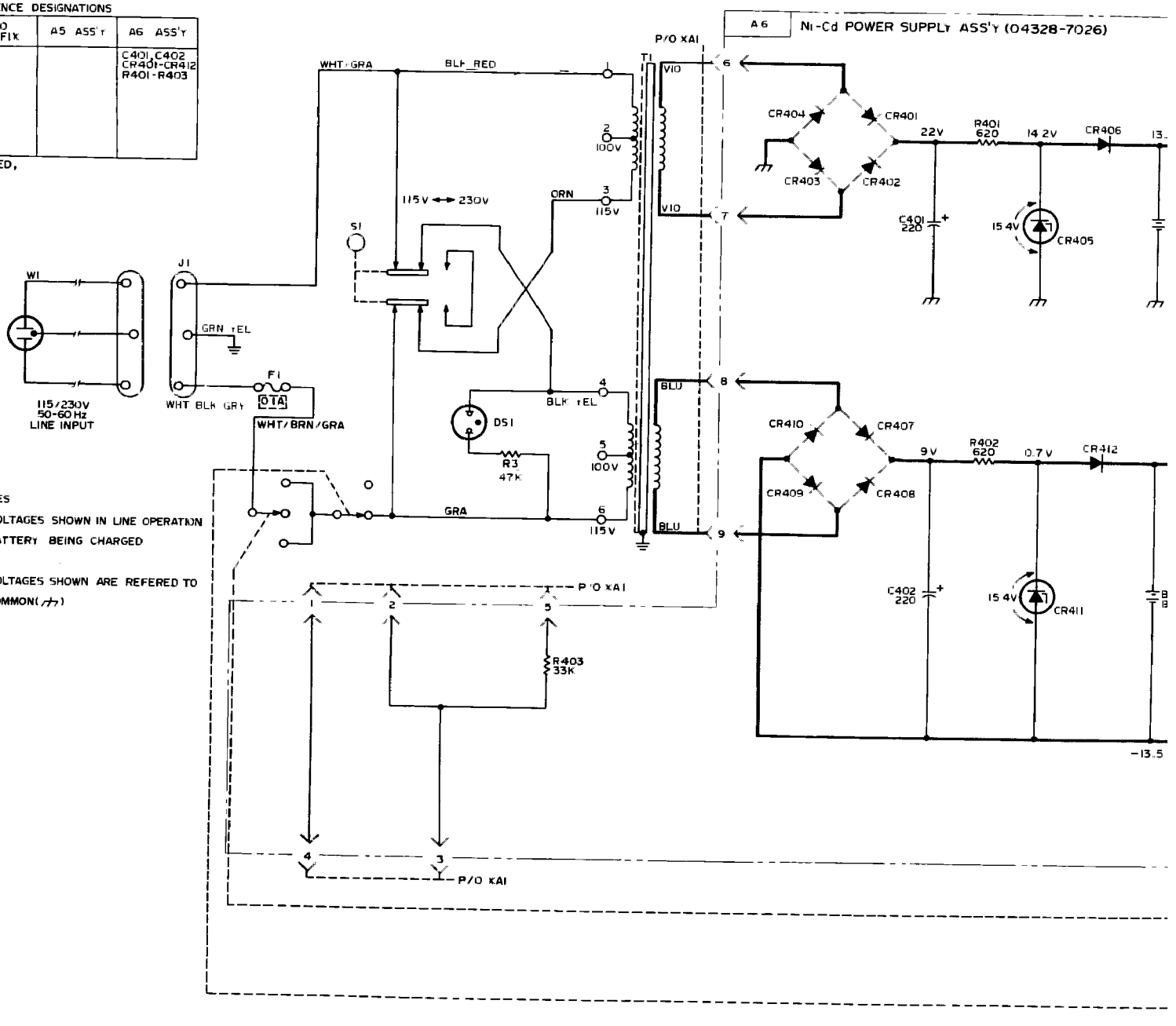

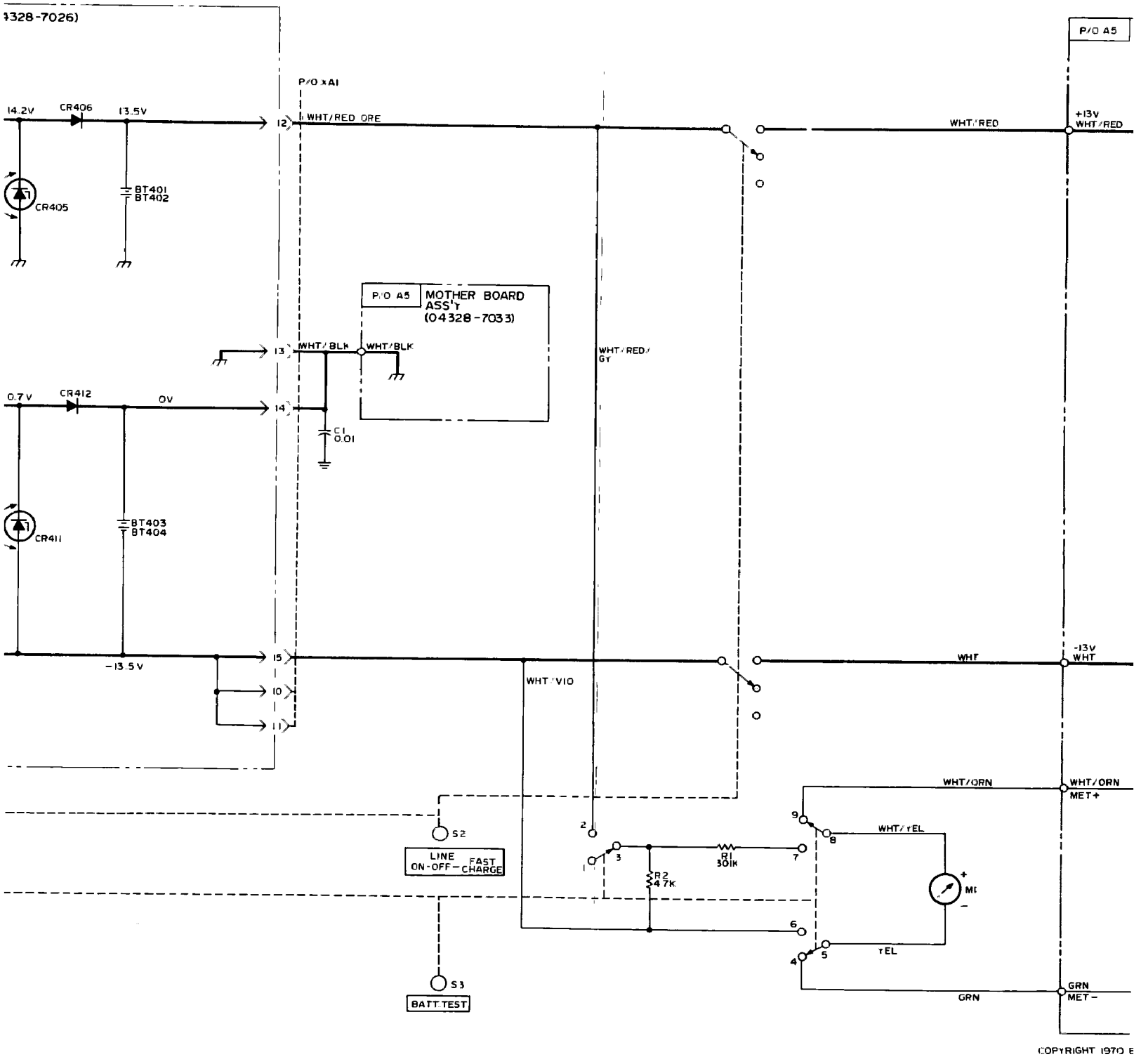

Figure 8-21
Ni-C

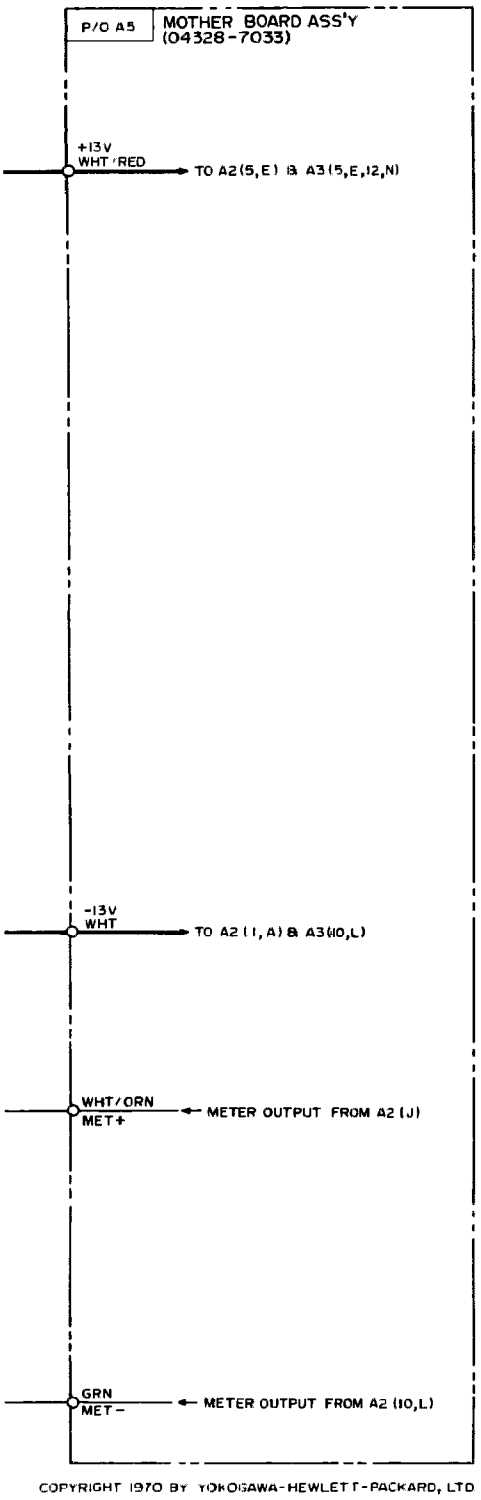

COPYRIGHT 1970 BY YOKOGAWA-HEWLETT-PACKARD, LTD

Figure 8-21 Mother Board Ass'y A5
Ni-Cd Power Supply Ass'y A6