Troubleshooting and Repair Manual

Volume 1

HP 85660B Spectrum Analyzer RF Section

HEWLETT PACKARD

HP Part No. 85660-90210 Microfiche Part No. 85660-90211
Printed in USA December 1990

@Copyright Hewlett-Packard Company 1990
All Rights Reserved. Reproduction, adaptation, or translation without prior written permission is prohibited, except as allowed under the copyright laws.
1212 Valley House Drive, Rohnert Park, CA 94928-4999, USA

Certification

Hewlett-Packard Company certifies that this product met its published specifications at the time of shipment from the factory. Hewlett-Packard further certifies that its calibration measurements are traceable to the United States National Institute of Standards and Technology, to the extent allowed by the Institute's calibration facility, and to the calibration facilities of other International Standards Organization members.

Warranty

This Hewlett-Packard instrument product is warranted against defects in material and workmanship for a period of one year from date of shipment. During the warranty period, Hewlett-Packard Company will, at its option, either repair or replace products which prove to be defective.

For warranty service or repair, this product must be returned to a service facility designated by HP. Buyer shall prepay shipping charges to HP and HP shall pay shipping charges to return the product to Buyer. However, Buyer shall pay all shipping charges, duties, and taxes for products returned to HP from another country.

HP warrants that its software and firmware designated by HP for use with an instrument will execute its programming instructions when properly installed on that instrument. HP does not warrant that the operation of the instrument, or software, or firmware will be uninterrupted or error-free.

Limitation of Warranty

The foregoing warranty shall not apply to defects resulting from improper or inadequate maintenance by Buyer, Buyer-supplied software or interfacing, unauthorized modification or misuse, operation outside of the environmental specifications for the product, or improper site preparation or maintenance.

NO OTHER WARRANTY IS EXPRESSED OR IMPLIED. HP SPECIFICALLY DISCLAIMS THE IMPLIED WARRANTIES OF MERCHANTABILITY AND FITNESS FOR A PARTICULAR PURPOSE.

Exclusive Remedies

THE REMEDIES PROVIDED HEREIN ARE BUYER'S SOLE AND EXCLUSIVE REMEDIES. HP SHALL NOT BE LIABLE FOR ANY DIRECT, INDIRECT, SPECIAL, INCIDENTAL, OR CONSEQUENTIAL DAMAGES, WHETHER BASED ON CONTRACT, TORT, OR ANY OTHER LEGAL THEORY.

Assistance

Product maintenance agreements and other customer assistance agreements are available for Hewlett-Packard products.

For any assistance, contact your nearest Hewlett-Packard Sales and Service Office.

Safety Symbols

The following safety symbols are used throughout this manual. Familiarize yourself with each of the symbols and its meaning before operating this instrument.

Caution



The ***caution*** sign denotes a hazard. It calls attention to a procedure which, if not correctly performed or adhered to, could result in damage to or destruction of the instrument. Do not proceed beyond a ***caution*** sign until the indicated conditions are fully understood and met.

Warning



The ***warning*** sign denotes a hazard. It calls attention to a procedure which, if not correctly performed or adhered to, could result in injury or loss of life. Do not proceed beyond a ***warning*** sign until the indicated conditions are fully understood and met.

General Safety Considerations

Warning



Before this instrument is switched on, make sure it has been properly grounded through the protective conductor of the ac power cable to a socket outlet provided with protective earth contact.

Any interruption of the protective (grounding) conductor, inside or outside the instrument, or disconnection of the protective earth terminal can result in personal injury.

Warning



There are many points in the instrument which can, if contacted, cause personal injury. Be extremely careful.

Any adjustments or service procedures that require operation of the instrument with protective covers removed should be performed only by trained service personnel.

Caution



Before this instrument is switched on, make sure its primary power circuitry has been adapted to the voltage of the ac power source.

Failure to set the ac power input to the correct voltage could cause damage to the instrument when the ac power cable is plugged in.

Contents

Volume 1

General Information	General information on the contents of the manual, including storage, shipment, and packaging.
Overall Troubleshooting	Troubleshooting index, special messages, diagnostic functions, error correction routine, sweep system block diagram and troubleshooting, mnemonics listing, and spectrum analyzer overall block diagram.
Analog Troubleshooting	Phase lock loop operation, start frequency tuning equations, and phase lock troubleshooting.
Digital Troubleshooting	Instrument preset checks, digital storage verification, and RF digital troubleshooting block diagram.
A5 Front Panel through A8 Rectifier/AS Power Line Module	Service sheets containing circuit descriptions, troubleshooting information (if applicable), replacement procedures (if applicable), replaceable parts lists, parts identification (if applicable), block diagrams, component locations, and schematic diagrams.

Volume 2

A10 20/30 Synthesizer through A23 Motherboard	Service sheets containing circuit descriptions, troubleshooting information (if applicable), replacement procedures (if applicable), replaceable parts lists, parts identification (if applicable), block diagrams, component locations, and schematic diagrams.
General Parts Listing	Replaceable parts information, reference designations and abbreviations, manufacturer's code list, RF miscellaneous parts list, RF assemblies parts list, and instrument parts identification.
Major Assembly and Comuonent Locations	RF section major assembly and component locations.

General Information

Introduction

This volume of the Troubleshooting and Repair Manual contains information for the troubleshooting and repair of the RF Section of the instrument. This information is combined in service sheets and indexed with tabs for quick reference. Also contained in this volume are overall troubleshooting information and illustrations of the instrument useful in isolating failures to the RF or IF-Display Section

Instruments Covered by This Manual

This Troubleshooting and Repair manual contains information for the servicing of all HP 85660B RF Sections with serial number prefixes of 2410A and above. The assemblies of the HP 8566AB Retrofit Kit (HP 8566A to HP 8566B Retrofit Kit) are also covered in this manual. The following HP 85660B RF Sections Options are covered in this manual.

- Option 001 (75Ω Input)
- Option 400 (400 Hz Operation)
- Option 462 (Impulse Bandwidths)

Changes that are made to the HP 85660B after the printing of this manual will be included in an update supplement.

The HP 85660B RF Section is used with the HP 85662A IF-Display Section as the HP 8566B Spectrum Analyzer. The HP 85660B RF Section is used with the HP 85662A Option 462 IF-Display Section as the HP 8566B Option 462 Spectrum Analyzer.

Service Sheets

The service sheets in this manual are organized in alphanumeric order and are indexed with tabs to make it easy to locate a specific service sheet. Each of the service sheets contain the following information:

- Circuit Description (where practical)
- Replacement Procedure (where practical)
- Troubleshooting Hints (where practical)
- Replaceable Parts List
- Component Location Illustration
- Parts Identification (where practical)
- Block Diagram (where practical)

- Schematic Diagram

Replacement Procedures

Replacement procedures are included for use in removing and replacing assemblies for repair. They are located in the following sections:

- A5 Front Panel

  Front Panel Removal and Repair

- A6 RF Module

  A6 RF Module Replacement
  A6Al Coaxial Switch and A6A17 300 MHz BPF Replacement
  A6A2 RF Attenuator Replacement
  A6A4 Second Converter Replacement
  A6A6 First Converter Replacement
  A6A15 3.6 GHz BPF, A6A16 1.5 GHz
  LPF, and A6A18 LPF Replacement

- A6A3 Last Converter

  A6A3 Last Converter Replacement

- A6A7 YTX Current Driver/A6A5 ACLU/A6A8 YTX

  A6A5 Amplifier/Coupler/Load Unit
  (ACLU) Replacement
  A6A7 YTX Current Driver Replacement
  A6A8 YTX Replacement

- A7M/N-Reference

  A7 M/N-Reference Replacement

- A8 Rectifier/A9 Power Line Module

  RF Section Internal Fuse Replacement
  Transformer Replacement
  Power Transistor Replacement

- All YTO Loop

  All YTO Loop and A11A3 YTO
  (2.0 to 6.2 GHz Oscillator) Replacement

- Al7 Positive Regulator

  RF Section Internal Fuse Replacement

- Al8 Negative Regulator

  RF Section Internal Fuse Replacement

Major Assembly and Component Locations

Major assembly and component location illustrations for the RF Section are located at the rear of this manual.

Troubleshooting

Troubleshooting information for the RF Section is divided into three levels as follows:

- Instrument Level

  Spectrum Analyzer Overall Troubleshooting

- Section Level

  RF Section Analog Troubleshooting
  RF Section Digital Troubleshooting
  A6 RF Module
  A7 M/N-Reference/A22 10 MHz Frequency Standard
  A10 20/30 Synthesizer
  All YTO Loop

- Assembly Level

  Most assemblies have troubleshooting hints immediately following circuit descriptions. Troubleshooting information is also located on assembly level block diagrams, notes, and schematics.

All assemblies are indexed by tab except for the ones listed below. The index tab they can be found under is also listed.

Table 1. Assembly Locations

Assembly	Location
A24	General Parts Listing
T1	A8 Rectifier/AS Power Line Module

Printed Circuit Board Edge Connector Contact Cleaning

Materials

- Lint-free cloth or equivalent (HP Part Number 9310-0039, Check Digit 3).
- Solution of 80% electronics-grade isopropyl alcohol and 20% water.
- Static-free work station.

Procedure

1. Dampen the cloth with the alcohol and water solution and scrub the edge connector contacts vigorously, using a circular motion. Polish one side of the board at a time until the contacts shine, keeping the cloth damp to dissolve contaminants and reduce static electricity.

2. Using a clean cloth, dry the contacts by wiping from their inside to outside edge. This prevents particles from building up on the contact edges.

Caution



Do not use erasers to clean the edge connectors. They cause microscopic damage to the contact surface, removing the thin gold plating and exposing the nickel underplating, which eventually corrodes. Erasers also leave a film on the contact and generate static electricity.

Do not use paper of any kind to clean the edge connector contacts. Paper or lint particles left on the edge contact surface can cause intermittent electrical connections.

Do not touch contact or trace surfaces with bare hands. Always handle the board by its edges.

HP-IB Address Selection

The HP-IB address for the HP 8566B is preset at the factory by means of a five-segment binary switch located on the Al5 Controller Assembly. This switch is set to the binary number 11111 which corresponds to a decimal equivalent of 31. The number 31 is a special instruction code that commands the instrument to use the last input address stored in memory. This stored HP-IB address is ASCII 2R (decimal 18) and determines the address to be used on "power up."

The HP-IB address may be changed to any of the addresses listed in Table 2 by resetting the HP-IB address switch to correspond to the binary equivalent of the desired ASCII character or decimal value as indicated in the table. The five-segment switch is illustrated in Figure 1 and is shown in its preset position (decimal 31).

Table 2. Cross-Reference Between ASCII, Decimal, and Binary Address Codes

ASCII Character		Decimal Value	5-Bit Binary Equivalent
@	SP	00	00000
A	!	01	00001
B	”	02	00010
C	#	03	00011
D	$	04	00100
E	%	05	00101
F	&	06	00110
G	'	07	00111
H	(	08	01000
I	›	09	01001
J	*	10	01010
K	+	11	01011
L	'	12	01100
M	–	13	01101
N	.	14	01110
0	/	15	01111
P	0	16	10000
Q	1	17	10001
R	2	18	10010
S	3	19	10011
T	4	20	10100
U	5	21	10101
V	6	22	10110
W	7	23	10111
X	8	24	11000
Y	9	25	11001
Z		26	11010
[	;	27	11011
\	<	28	11100
]	=	29	11101
^	>	30	11110

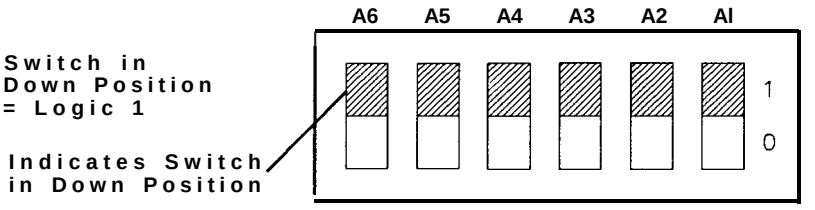

Figure 1. HP-IB Address Switch (Shown in Factory Preset Position)

The HP-IB address may also be changed from the front panel or programmed via a controller using a special shift key function (KSP). This address remains in effect as long as the instrument memory has power from either the ac line or the internal battery. However, if this stored address is lost, the default address is the factory preset decimal 18 (ASCII 2R). For additional information on the HP-IB address, refer to the Operating and Programming Manual.

Storage and Shipment

Environment

The instrument may be stored or shipped in environments within the following limits:

Temperature . . . . . -40°C to +75°c
Humidity . . . .5% to 90% at 0°C to 40°C
Altitude . . . . . .Up to 15,240 meters (50,000 feet)

The instrument should be protected from temperature extremes which might cause condensation within the instrument.

Original Packaging

It is recommended that the original factory packaging materials be retained for use when shipping the instrument. If original packaging material cannot be retained, packaging materials identical to those used in factory packaging are available through the Hewlett-Packard offices. Part numbers and descriptions of the packaging materials are listed in Figure 2.

The combined weight of the two instrument sections is approximately 50 kg (112 lbs). Because of the weight involved, do not package the instrument sections fastened together as one unit. The instrument sections must be separated and packaged in separate containers. The quantity of packaging materials in Figure 2 is for only one instrument section.

If the instrument is being returned to Hewlett-Packard for servicing, attach a tag to each carton indicating the type of service required, return address, model number, and full serial number. For your convenience, a supply of tags is included at the end of this section. Also, mark each container FRAGILE to assure careful handling. In any correspondence, refer to the instrument by model number and full serial number.

Other Packaging

If it is necessary to use packaging materials other than the type used in original factory packaging, the following general instructions should be followed.

1. Separate the two instrument sections and wrap each in heavy paper or plastic.
2. Place the instrument sections in separate containers with 8 to 10 cm (3 to 4 inches) of shock-absorbing material around all sides to provide firm cushioning and prevent movement inside the container. Protect front panels with cardboard. Double-wall corrugated cartons of 125 kg (275 lb) bursting strength are sufficient for shipping containers.
3. Seal each container securely and, if shipping to a Hewlett-Packard office or service center, attach a tag to each container indicating the type of service required, return address, model number and full serial number. For your convenience, a supply of tags is included at the end of this section.
4. Mark each container FRAGILE to assure careful handling.

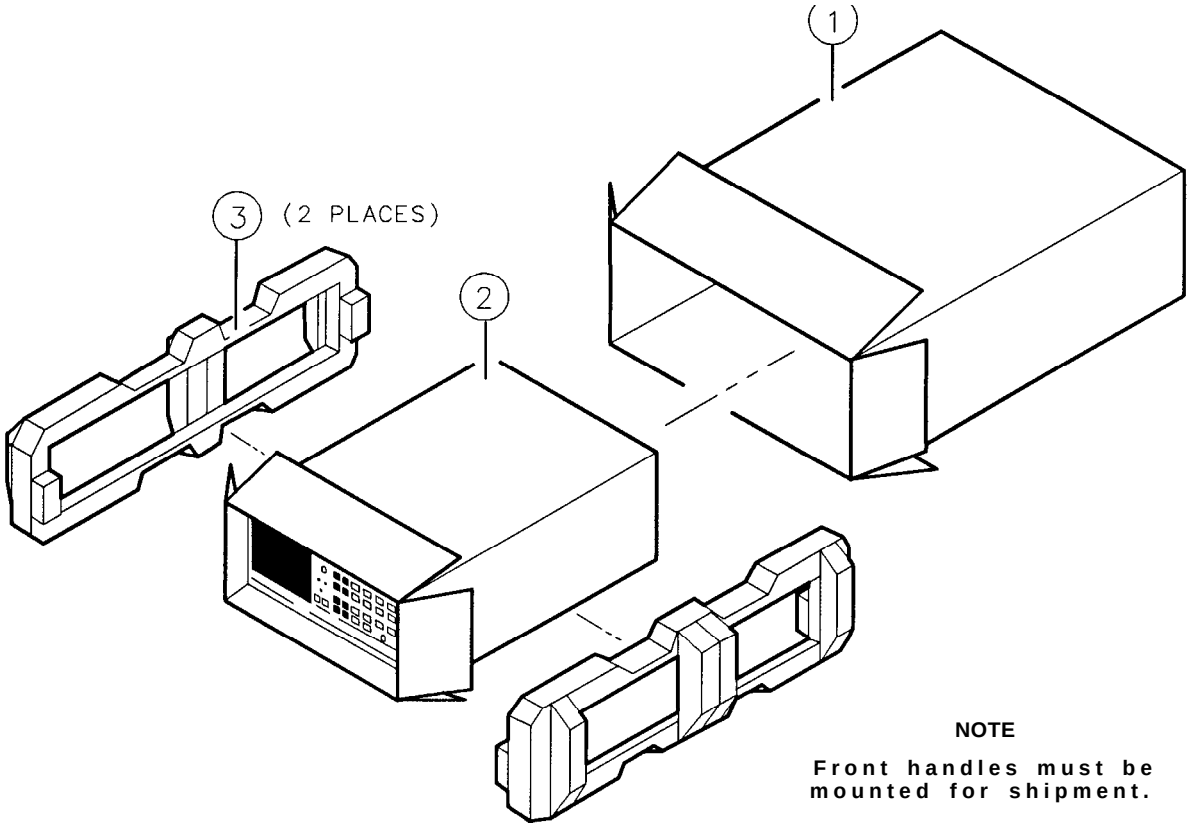

Item	HP Part Number	CD	Qty	Description
1	9211-4487	3	1	OUTER BOX
2	5180-2320	8	1	INNER BOX
3	5180-2319	5	2	INNER FOAM PAD

Figure 2. Packaging for Shipment Using Factory Packaging Materials

Recommended Test Equipment

A list of recommended test equipment is contained in the HP 8566B Performance Tests and Adjustments Manual (HP Part Number 08566-90148). This list includes all of the equipment that is necessary to perform the adjustments and tests of the HP 8566B. The List of Recommended Test Equipment recommends a model number for each piece of equipment needed and contains minimum specifications so that other equipment may be substituted for the recommended model.

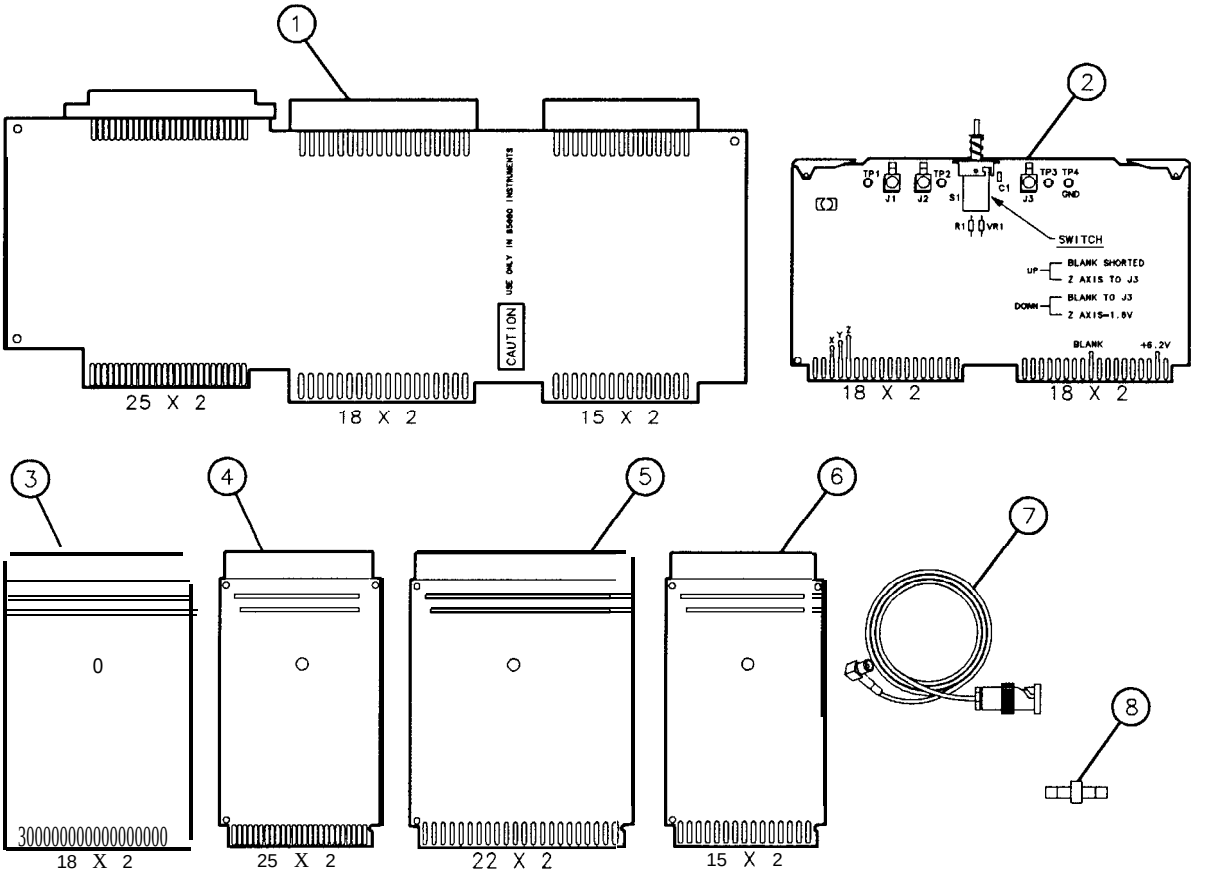

Item	HP Part Number	CD	Qty	Description
1	85660-60114	5	1	EXTENDER BOARD: Al2 RF SECTION INTERFACE
2	85662-60088	4	1	PC BOARD: DISPLAY ADJUSTMENT TEST
3	08505-60042	8	2	EXTENDER BOARD: 36 CONTACTS; 2 ROWS OF 18
4	85680-60034	2	2	EXTENDER BOARD: 50 CONTACTS; 2 ROWS OF 25
5	08565-60107	8	2	EXTENDER BOARD: 44 CONTACTS; 2 ROWS OF 22
6	08505-60041	7	1	EXTENDER BOARD: 30 CONTACTS; 2 ROWS OF 15
7	85680-60093	3	2	CABLE: 4-FOOT LONG; BNC TO SMB SNAP-ON
8	1250-0669	9	1	ADAPTER: SMB SNAP-ON MALE TO SMB SNAP-ON MALE

Figure 3. Service Accessories, HP Part Number 08566-60001

This page intentionally left blank.

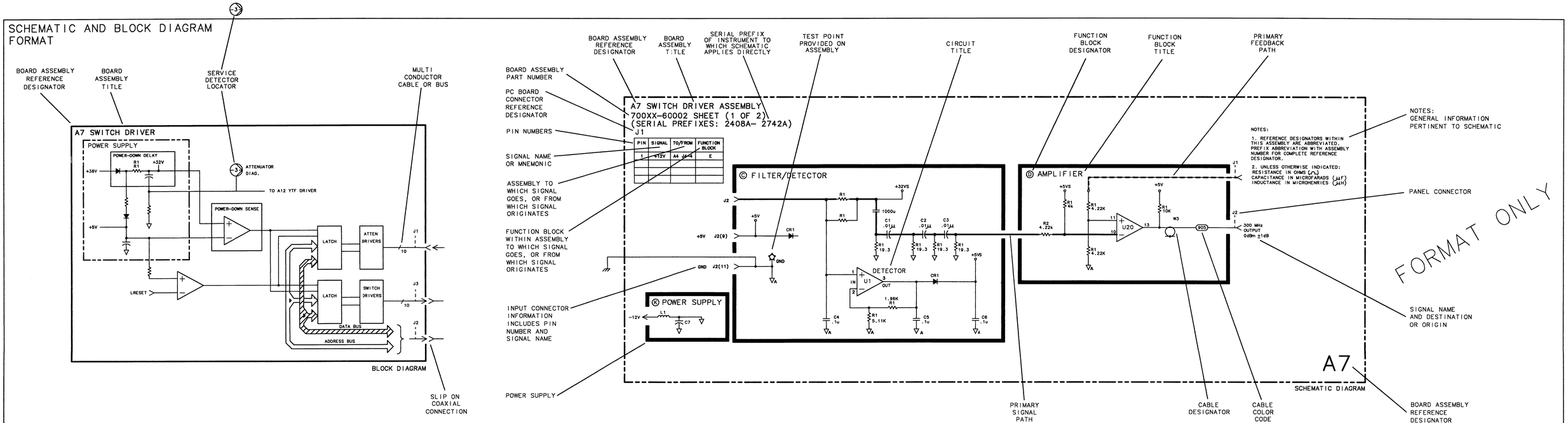

FIGURE 4. SCHEMATIC AND BLOCK DIAGRAM FORMAT

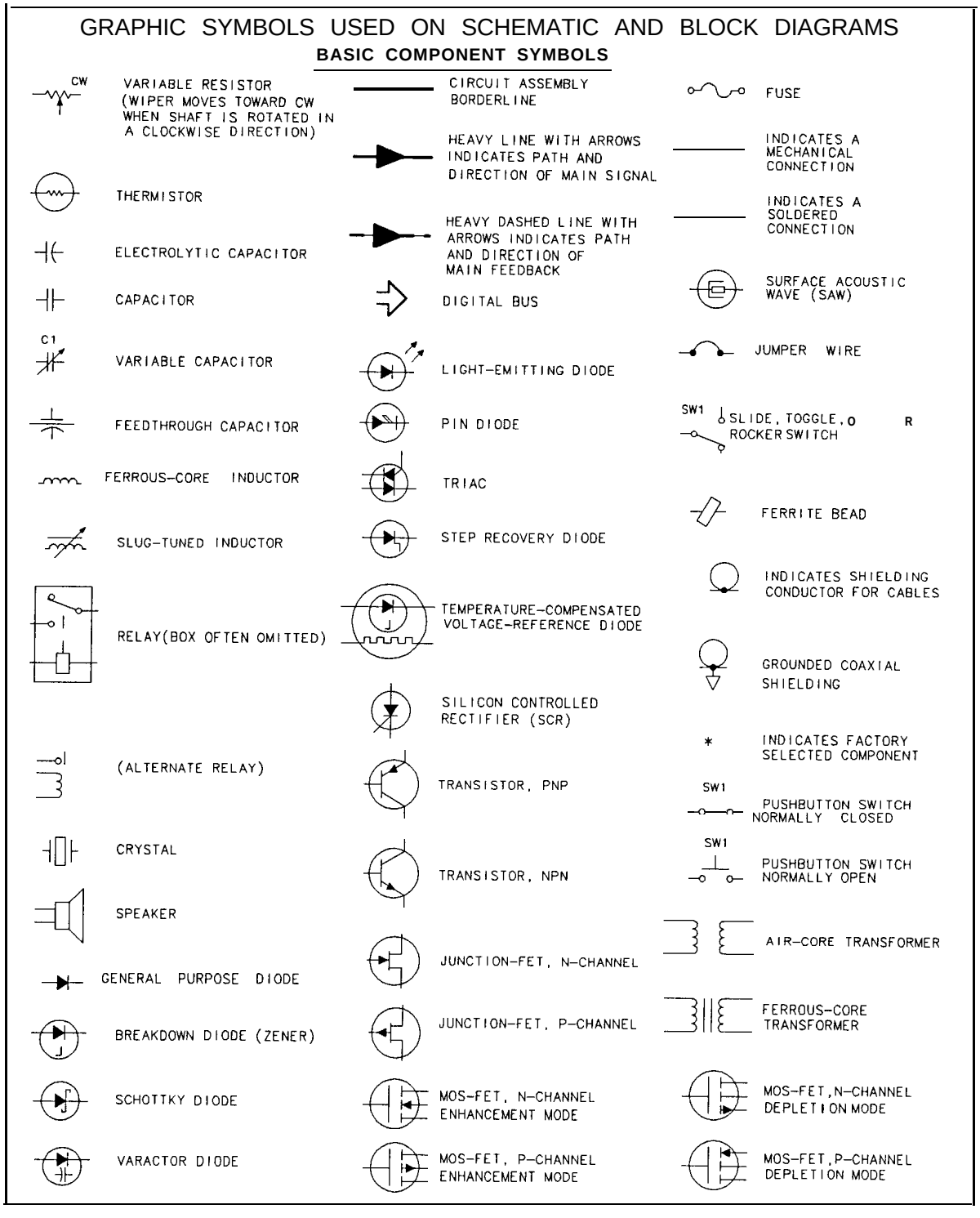

Figure 5. Graphic Symbols (1 of 2)

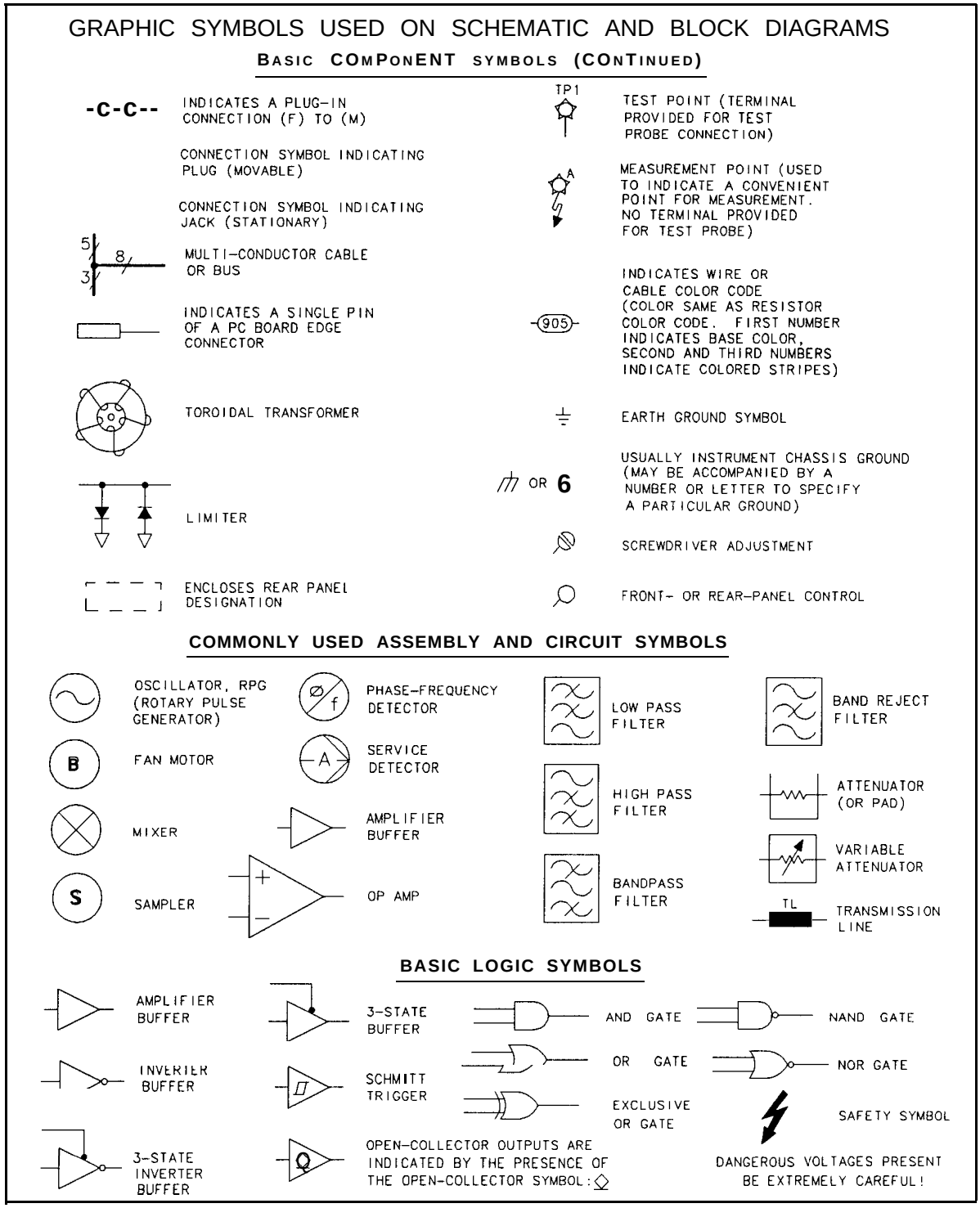

Figure 5. Graphic Symbols (2 of 2)

Schematic Symbols for Digital Integrated Circuits

The following is a guide to the symbols used for digital or logic ICs in this manual. The symbology is based upon American National Standard ANSI Y32.14, ***Graphic Symbols for Logic Diagrams (Two-State*** Devices), but does not strictly follow the standard. Figure 6 should be consulted for the explanation of digital IC symbols used in Sections VIII and IX.

Definitions

Logic Element. The part or parts of a logic device symbol having a well-defined logic function (OR, AND, FLIP-FLOP, and so on) and one or more outputs. The inputs of a logic element may be data or control inputs; the outputs are data outputs.

Control Block. The part of a logic device symbol to which all logic lines common to a group of logic elements are connected. Lines connected to a control block are control lines.

Function Label. The notation within a logic device symbol that denotes its overall logic function (counter, shift register, multiplexer, and so on)

Line Label. The symbol or abbreviation associated with an output or input line that defines the action of the line.

Indicator Symbol. A symbol associated with an input or output line which defines the active state or special characteristics of the line.

Basic Logic Symbols

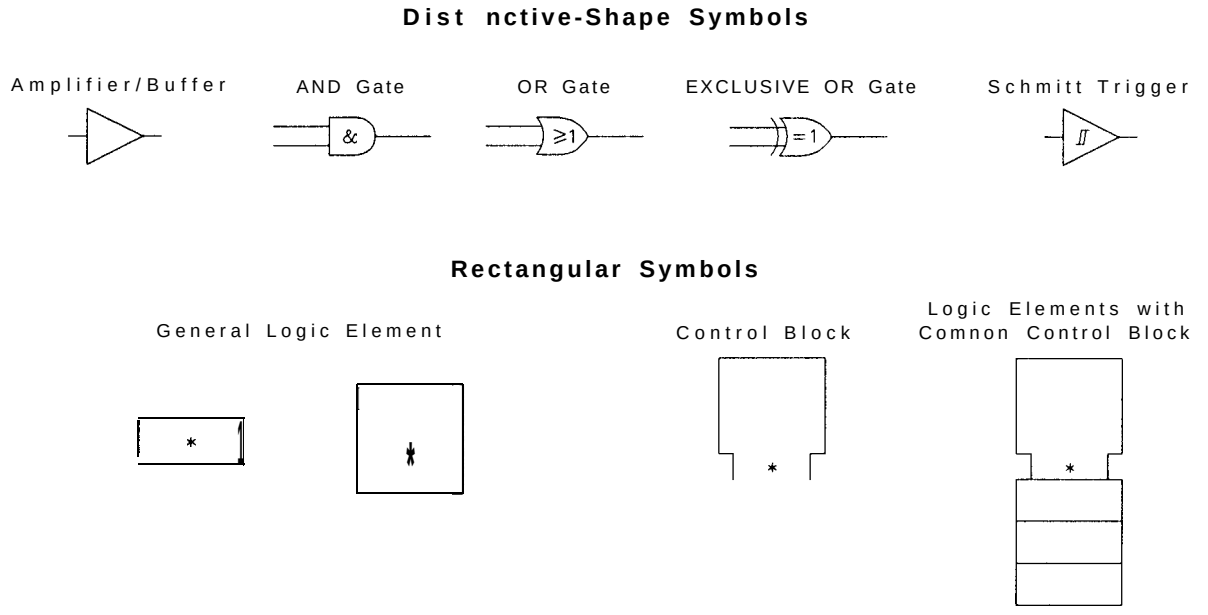

NOTE: An asterisk indicates the location of the function label. If elements sharing control lines are widely separated, each element will have a separate control block.

Figure 6. Schematic Symbols for Digital Integrated Circuits (1 of 7)

INDICATOR SYMBOLS (positive logic assumed)

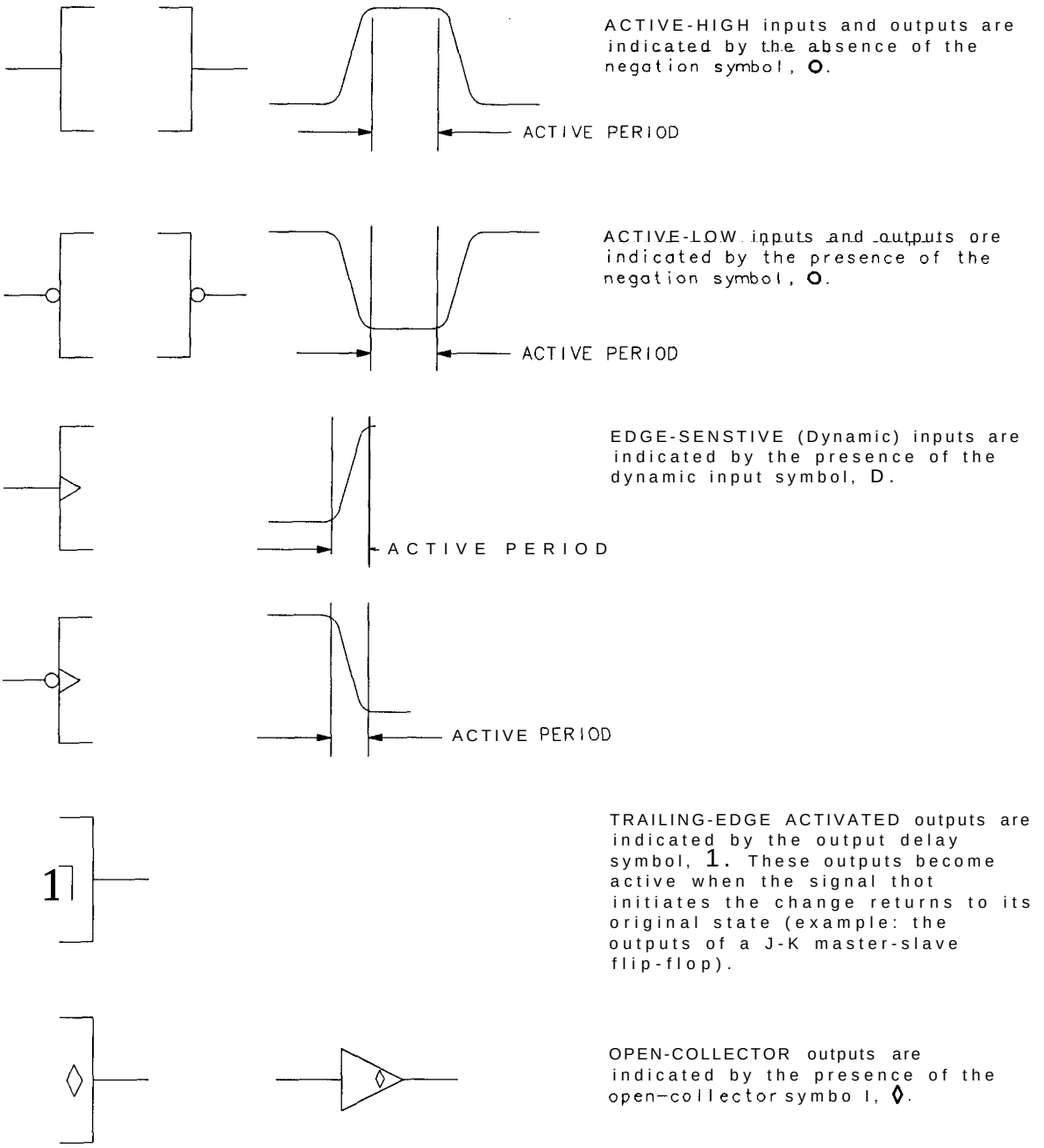

Figure 6. Schematic Symbols for Digital Integrated Circuits (2 of 7)

Note:

The logic negation symbol (0) alone gives no information about the actual voltage levels used in a digital cirucit. For this reason the type of logic system (positive or negative) must be specified. In this manual, unless otherwise noted on the schematic, the logic system is positive; that is, the more positive voltage level is the HIGH or l-state and the less positive level is the LOW or O-state.

Function Labels

Σ	Adder
D	Amplifier/Buffer
1 4	Monostable Multivibrator (One-Shot)
&	And Gate
≥1	Or Gate
=1	Exclusive or Gate
X→Y	Encoder, Decoder
XMAX→Y	Priority Encoder
greek symbol	Schmitt Trigger
ALU	Arithmetic and Logic Unit
CTR	Counter
DEMUX	Demultiplexer
FF	Flip-Flop
MUX	Multiplexer
RAM	Random Access Memory
REG	Register
ROM	Read Only Memory
SAR	Successive Approximation Register
SR	Shift Register

Figure 6. Schematic Symbols for Digital Integrated Circuits (3 of 7)

Line Labels	
←	Shift Left (or up)
→	Shift Right (or down)
+1	Count Up
- 1	Count Down
=0,-1	Borrow Output
=9,+1	Carry Output (Decimal Counter)
=15,+1	Carry Output (Binary Counter)
An	nth Address Bit (ROM, RAM)
c	Clock Input
D	Data or Delay Input (Flip-Flop)
Dn	nth Data Bit Input
EN	Enable
F	3-State Enable Input (See “Dependency”)
G	Gating Input (See “Dependency”)
J	J-K Flip-Flop J Input
K	J-K Flip-Flop K Input
LD	Load Enable Input (Synchronous)
PS	Preset Input (Asynchronous)
R	Reset or Clear Input
RD	Read Enable Input (RAM, ROM)
S	Set Input
SEL	Line or Function Select Input
SER	Serial Data Input (Shift Register)
T	Trigger Input (Monostable)
WR	Write Enable Input (RAM)
Yn	nth Data Bit Output or I/O
3-ST (placed by function label)	3-State

Figure 6. Schematic Symbols for Digital Integrated Circuits (4 of 7)

Notes

1. The suffix or subscript 0 denotes the least significant bit (LSB) of a data or address word.
2. Letters may be used to identify a line or logic element without indicating a specific logic function. For example:

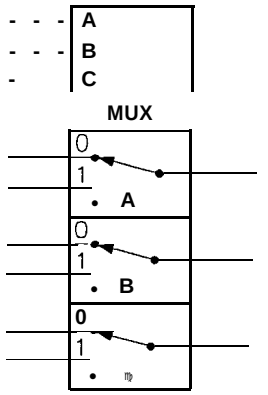

Triple Z-Channel Multiplexer

Letters are used to relate control inputs to logic elements. The numerals 0 and 1 indicate O-state and l-state, respectively, and relate the position of a "switch" to the logic state of the corresponding control line.

DEPENDENCY (G and F)

The dependency of inputs or outputs on an input is indicated with gate symbols or the G line label. Gate symbols are often used when the dependency exists between inputs. Two examples are:

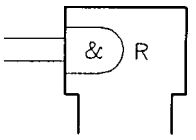

Two inputs ANDed to produce a reset

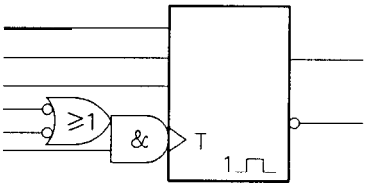

Three inputs gated to produce a trigger

Figure 6. Schematic Symbols for Digital Integrated Circuits (5 of 7)

When the G label is used, the gating input is labelled with a G followed by a numeral or letter. The line labels of the gated inputs or outputs are prefixed with the same numeral or letter. Two examples are:

2-Bit Register

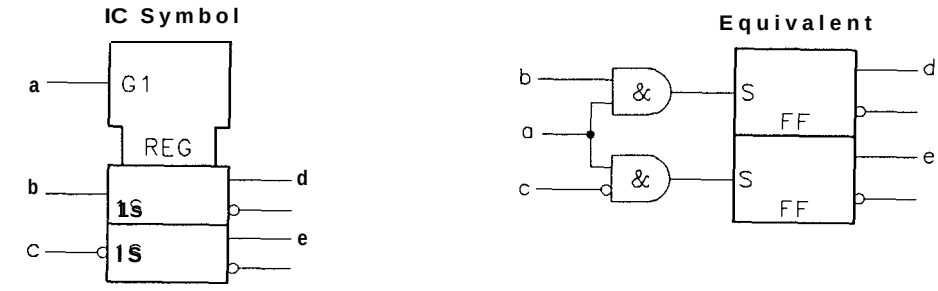

2-to-4 Line Decoder

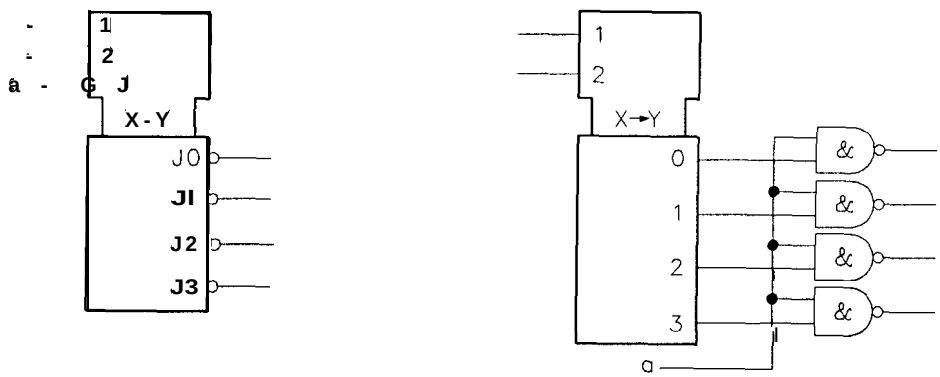

Figure 6. Schematic Symbols for Digital Integrated Circuits (6 of 7)

The F line label is used to indicate S-state logic. The S-state enable i:nput is labelled with an F and numerals or letters are used as with the G label:

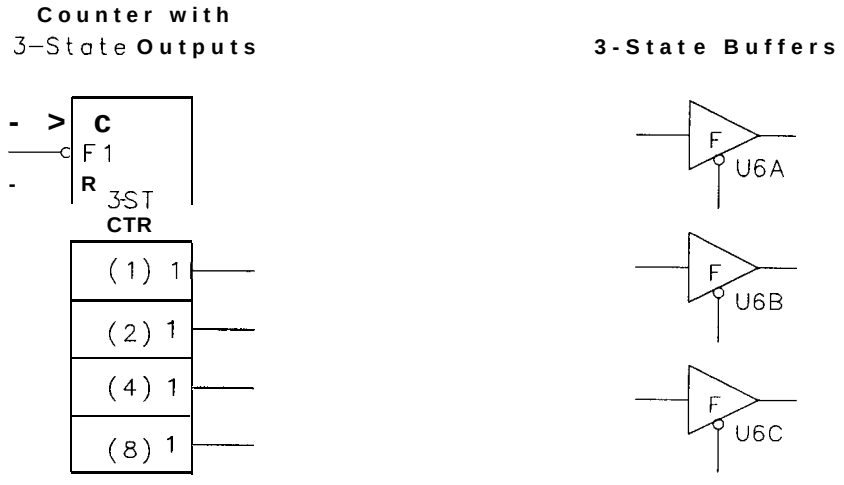

Figure 6. Schematic Symbols for Digital Integrated Circuits (7 of 7)

Weighting of Input and Output Lines

The coding of multiplexers, demultiplexers, encoders, and decoders is shown by decimal weighting. An example is the 2-to-4-line decoder shown on the previous page.

Weighting of Flip-Flops

When the position of a flip-flop in an array is significant (as in counters and shift registers), the flip-flop is labelled with its decimal weight. An example is the "Counter with S-State Outputs" shown above.

Overall Troubleshooting

This chapter contains information that will help to identify the system of the spectrum analyzer that is not operating correctly. Table 1, “Troubleshooting Index,” may be used to locate troubleshooting information in the RF and IF Display Troubleshooting and Repair Manuals. This chapter also describes the Special Messages that may be displayed on the CRT and the Diagnostic Functions that are accessible from the front panel. The Error Correction Routine and the Sweep System are also described in this chapter. The overall block diagram of the HP 8566B is located at the end of this chapter.

Table 1. Troubleshooting Index

Troubleshooting Information	Tab Title or Location	Section
Start Frequency Tuning Equations and Phase Lock	RF Section Analog Troubleshooting Block Diagram	RF
Diagnostic Functions	Spectrum Analyzer Overall Troubleshooting	RF
Digital Storage	A3 Digital Storage Block Diagram	IF
Display System	Spectrum Analyzer Overall Troubleshooting	RF
	Al Display Section Block Diagram	IF
Error Correction Routine	Spectrum Analyzer Overall Troubleshooting	RF
RF Section Digital (includes INSTR CHECK LEDs)	A3 Digital Storage Block Diagram	IF
	RF Section Digital Troubleshooting Block Diagram	RF
	Al5 Controller	RF
Special Messages	Spectrum Analyzer Overall Troubleshooting	RF
Sweep System	Spectrum Analyzer Overall Troubleshooting	RF
AlAl Keyboard	Al2 Front-Panel Interface	RF
A3 Digital Storage	Spectrum Analyzer Overall Troubleshooting	RF
	A3 Digital Storage Block Diagram	IF
A3Al Trigger*	Spectrum Analyzer Overall Troubleshooting (Sweep System)	RF
	A3 Digital Storage Block Diagram	IF
A3A2 Intensity Control*	Al Display Section Block Diagram	IF
	A3 Digital Storage Block Diagram	IF
A3A3 Line Generator*	Al Display Section Block Diagram	IF
	A3 Digital Storage Block Diagram	IF
A3A4 Memory	Al Display Section Block Diagram	IF
	A3 Digital Storage Block Diagram	IF
A3A5 Data Manipulator A3A6 Main Control A3A7 Interface	A3 Digital Storage Block Diagram	IF
* Troubleshooting information is also located behind the tab with this title.		

Table 1. Troubleshooting Index (continued)

Troubleshooting Information	Tab Title or Location	Section
A3A8 Analog-Digital-Converter*	Spectrum Analyzer Overall Troubleshooting (Sweep System)	RF
	Al Display Section Block Diagram	IF
	A3 Digital Storage Block Diagram	IF
A3A9 Track and Hold*	Spectrum Analyzer Overall Troubleshooting (Diagnostic Functions)	RF
	Al Display Section Block Diagram	IF
	A3 Digital Storage Block Diagram	IF
A4Al Video Processor* A4A2 Log Amplifier-Detector* A4A3 Log Amplifier-Filter* A4A4 Bandwidth Filter A4A5 Step Gain* A4A6 Down/Up Converter* A4A7 3 MHz Bandwidth Filter A4A8 Attenuator-Bandwidth Filter* A4A9 IF Control*	Spectrum Analyzer Overall Troubleshooting (Error Correction Routine)	RF
A5 Front Panel	Al2 Front-Panel Interface	RF
	Al5 Controller	RF
A6 RF Module A7 M/N Loop A10 20/30 Synthesizer All YTO Loop	Spectrum Analyzer Overall Troubleshooting (Diagnostic Functions)	RF
Al2 Front-Panel Interface*	Spectrum Analyzer Overall Troubleshooting (Sweep System)	RF
	Al5 Controller	RF
Al5 Controller*	Spectrum Analyzer Overall Troubleshooting (Sweep System)	RF
Al6 Scan Generator*	Spectrum Analyzer Overall Troubleshooting (Sweep System)	RF

* Troubleshooting information is also located behind the tab with this title.

Special Messages

As a convenience to the operator and as an aid in servicing, eleven messages can appear in the upper right corner of the CRT display. (Ten of these messages are shown in Figure 1.) Five of the messages inform the operator of possible erroneous data from improper instrument operation. The other six provide warnings of instrument malfunctions that must be repaired for proper instrument operation.

A brief description of each message follows. The troubleshooting information listed is not meant to be exhaustive. Refer to the appropriate Troubleshooting Block Diagram and Troubleshooting Hints for more detailed information.

EXT REF

Indication to operator that the external frequency reference is selected.

MEAS UNCAL

A warning to the operator that the amplitude/frequency data on the CRT is invalid because the analyzer's sweep speed is too fast for the selected bandwidth.

A warning to the operator that the analyzer settings displayed on the CRT have been changed but the trace data has not been updated. This would occur, for example, when Trace A view is selected and then Center Frequency is changed.

OVEN COLD

Indication that the frequency reference oven temperature is too low. There will be an oven cold indication normally for about 10 minutes after the line power is initially applied to the instrument. (The oven is powered and should stay warm as long as the instrument is in STANDBY.) The time base HOVC (High = Oven Cold) signal is routed to the Al2 Front-Panel Interface for generation of this message.

BATTERY

A warning to the operator that the CMOS memory on the Al5 Controller has probably lost the stored instrument states. The warning can only appear at instrument turn on. If it appears, the instrument automatically reinitializes all the instrument states to the instrument preset condition. The battery warning can be caused by a problem with the Al5 CMOS memory power supply circuit. Performing the "long POP" instrument check (see RF Section Digital Troubleshooting) erases the stored instrument states and causes a battery warning to appear at instrument turn on. The HP-IB address is also lost. The battery warning can be removed by pressing (2-22 GHz) and the HP-IB address restored by keying in (SHIFT) (ZOOM) [desired address] (Hz μV μsec).

PLl

The PLLl Phase Lock Loop is unlocked. Items to check are:

- AlOAl - Check signal out at AlOAlJ3.
- AlOA2 - Check signal in at AlOA2J2.
- A10A3 - Check signal out at AlOA3J3.
- AlOA4 - Check signal out at AlOA4J2 and in at AlOA4J4.

PLL2

The PLL2 Phase Lock Loop is unlocked. Items to check are:

- AlOA5 - Check signal out at AlOA5J3.
- AlOA6 - Check ϕ Det Out voltage at AlOA6TP7.
- AlOA7 - Check 500 kHz Reference at AlOA7TP5 and divided output at AlOA7TPl.
- AlOA8 - Check VCO Tune output current at AlOA8J2.

REF UNLOCK

The 10 MHz Reference Loop is unlocked. Items to check are:

- **OVEN COLD** indicator on. This is normal operation.
- Cable W15 connected to rear-panel FREQ REFERENCE IN and OUT connectors.
- Rear-Panel FREQ REFERENCE EXT/INT switch in proper position.
- A7Al and A7A2 - Check 10 MHz out at A7AlJ4.

YTO UNLOCK

The YTO Phase Lock Loop is unlocked. Items to check are:

- A19 D/AConverter
- A20 Main Coil Driver
- A21 FM Coil Driver
- All YTO Loop
- Al6 Scan Generator

M/N UNLOCK

The M/N Phase Lock Loop is unlocked. Items to check are:

- A7A3 - Check output at A7A3Jl.
- A7A4 - Check output at A7A4Jl.

HET UNLOCK

The RF Module Phase Lock Loop is unlocked. Items to check are:

- CAL OUTPUT
- A6A9 - Check voltage at A6A9J4.
- A6A4 - Check 3.3 GHz output of A6A4.

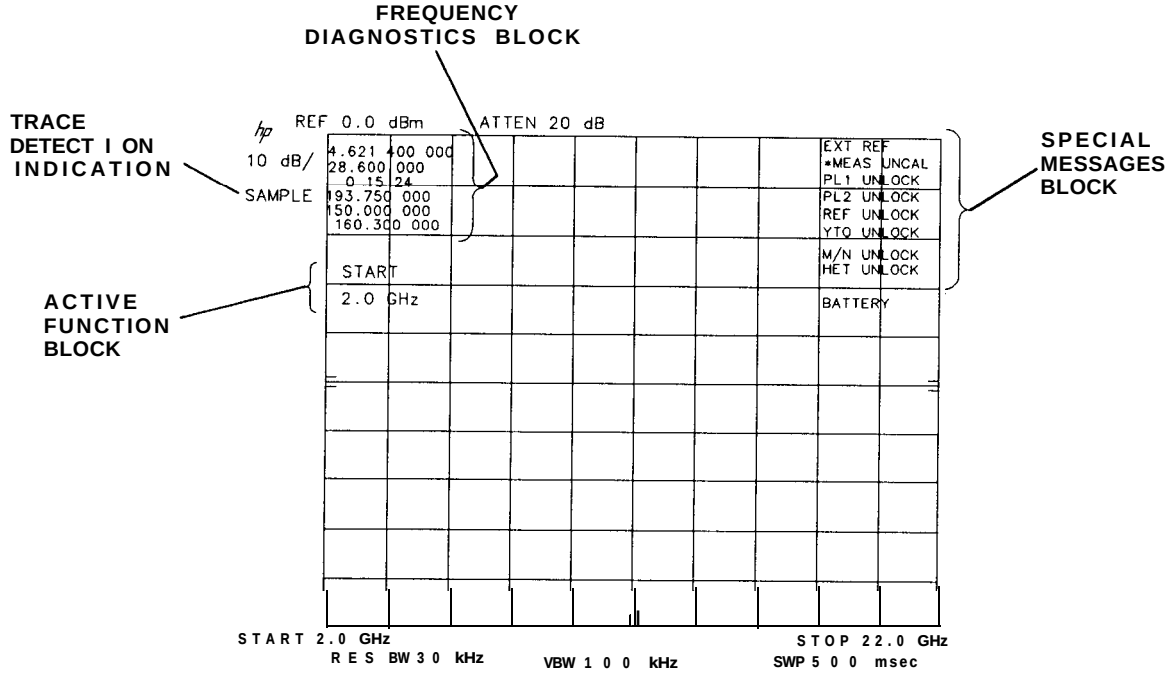

Figure 1. CRT Locations of Special Messages and Diagnostic Function Indicators

Diagnostic Functions

The Diagnostic Functions are accessible through the blue [SHIFT] key on the front panel. Through their use it is possible to trace many instrument malfunctions back to the functional block without removing any assemblies. They are also used in Performance Tests and Adjustments as an aid in performing necessary adjustments. A summary of the Diagnostic Functions follows. More information on their use can be found in the troubleshooting procedures.

Frequency Diagnostics (SHIFT) R(MKR▶ REF LVL) (KSR)

This function displays many of the internal frequency control parameters in the upper left corner of the CRT display. (See Figure 1.) These parameters are the programmed values determined by the Al5 Controller. For example, following an (2-22 GHz), a (SHIFT) R (MKR▶REF LVL) (KSR) might display the following values:

1. 2.321 400000
2. 30.000 000
3. 1 17 11
4. 184.545 455
5. 150.000 000
6. 160.300 000

Line 1 is the setting of the YTO Frequency for the selected START frequency.

Line 2 is the setting of the 20/30 SYNTHESIZER for the selected START frequency.

Line 3 contains three different numbers. The first is the band code number. The setting varies from 0 for center frequencies below 2.5 GHz to 4 for center frequencies above 18.6 GHz. The second number is the M number of the M/N loop. The third number is the N number of the M/N Loop.

Line 4 indicates the frequency output of the M/N loop.

Line 5 indicates the frequency to which the PLL2 VCO has been tuned.

Line 6 shows the frequency to which the Controller has programmed the PLL3 VCO.

Lock Indicator Disable A12TP2 Jumpered to A12TP3

This function permits the analyzer to sweep at normal sweep rates ignoring any phase lock flag indications. For example, if a YTO UNLOCK problem exists, the analyzer will sweep slower since it spends most of its time trying to lock the YTO at center frequency during retrace. By performing the phase lock inhibit, the analyzer does not waste time trying to lock the YTO, so the front panel keys and display can be used as in normal operation. Note that the displayed frequencies will probably not be accurate.

Trace Detection

Three different sampling modes are used by the analyzer in converting the video signal; these are positive peak, negative peak, and sample. Normally the analyzer selects the proper mode for each measurement, but these can be manually selected to verify proper operation. The mode selected is indicated on the upper left side of the CRT display when under manual control. (See Figure 1.) For example, a signal could be expanded to 2 dB/div to eliminate the noise floor, and then by comparing a positive peak trace measurement, it can be determined if the gains and offsets of the three modes are properly aligned. All three should appear the same on a stable, noise-free signal. When in the noise, the positive peak should display the highest noise peaks, negative peak mode should display the lowest noise levels, and sample mode should display values between the positive and negative peaks.

(SHIFT) Trace A b(MAX HOLD) (KSb) displays positive peaks.

[SHIFT] Trace A [d][VIEW] (KSd) displays negative peaks.

(SHIFT) Trace A [e][BLANK] (KSe) displays sampled data.

[SHIFT] Trace A (ksa) returns to the normal automatic detection modes and removes the CRT indication.

Error Correction Routine

The internal Error Correction Routine available by pressing [SHIFT] [W][FREQUENCY_SPAN] (KSW) is also useful as a diagnostic aid. If a malfunction causes the routine to stop, restart it and note the control settings (RES BW, ATTEN, REF LEVEL, LOG/LIN, etc.) when the failure occurred. If the routine runs, the correction factors can be displayed by pressing [SHIFT] [w][LINE] (KSw). Figure 2 displays the data for a typical instrument. Table 2 gives the parametric information, specifications and a place to start the troubleshooting procedure.

Caution must be exercised in interpreting the correction factor data. Wrong conclusions can be reached by not understanding how the internal program runs. The program assumes that the input signal level is -10.0 dBm. Any error in this level translates to the correction factors; therefore, the Amplitude Accuracy test [RECALL] 8 should be performed first. The internal program runs in the LIN mode while [RECALL] 8 is in 1 dB/LOG mode. Large offsets in LOG/LIN offset (lines 1 and 14) will cause errors in the data.

```
hp   REF - 7 . 0  dBm    ATTEN 10 dB
1  dB/   -0.17 dB
         0.30  dB
          0 25 dB
          0.20 dB
          0.21 dB
          0 05 dB    155.000 kHz
          0.00 dB    75.000 kHz
         -0 10 dB    18.000 kHz
         -0.18 dB    13.000 kHz
          1.50 dB   -11.000 kHz
          0.20 dB   -400  Hz
          0.11 dB    200  Hz
          0.25 dB  -100  Hz
          0 25 dB  -52  Hz
          0 20 dB  -40  Hz
          0.05 dB  -41  Hz
         -0.22 dB  -36  Hz
         -0.17 dB
         -0.03 dB
         -0.07 dB
         -0.03 dB
         -0 15 dB
CORR'D   -0 08 dB
         -0.10 dB
         -0.18 dB
         -0.02 dB
         -0.02 dB
         -0.02 dB
         -0 02 dB
         -0 02 dB
         -0.02 dB
START 100 000 000 MHz                        STOP 100 0
       RES BW 30 Hz       VBW 100 Hz            SWP 1
```

Figure 2. Error Correction Routine Data

Table 2. Error Correction Routine Parameters

Line	Parameter	Specification	Troubleshooting Information
1	LOG and LIN scale, BW <100 kHz	±1 dB typical	A4A3/A4A2
2	LOG 10 db/	f(0.5 dB-1 dB reading)	A4A1
3	LOG 5 dB/	±(0.5 dB-1 dB reading)	A4A1
4	LOG 2 dB/	f(0.5 dB-1 dB reading)	A4A1
5	LOG 1 dB/	±0.5 dB	
6	RES BW = 3 MHz	±1 dB*	A4A8/A4A4/A4A6
7	1 MHz	f0.5 dB*	A4A8/A4A4/A4A6
8	300 kHz	f0.5 dB*	A4A8/A4A4/A4A6
9	100 kHz	f0.5 dB*	A4A8/A4A4/A4A6
10	30 kHz	f0.5 dB*	A4A8/A4A4/A4A6
11	10 kHz	±0.5 dB*	A4A8/A4A4/A4A6
12	3 kHz	±0.5 dB*	A4A8/A4A4/A4A6
13	1 kHz	f0.5 dB*	
14	300 Hz	f0.5 dB*	
15	100 Hz	±0.5 dB*	A4A7/A4A6/A4A5
16	30 Hz	f0.5 dB*	
17	10 Hz	±1.0 dB*	
18	LOG and LIN scale, BW ≥100 kHz	±1.0 dB typical	A4A3/A4A2
19	Step Gains = A20	+0.6 dB	A4A8
20	A10	+0.6 dB	A4A8
21	SG20-2	+1.0 dB	A4A5
22	SG20-1	f1.O dB	A4A5
23	SGlO	f1.O dB	A4A5
24	LG20	t1.O dB typical	A4A3
25	LGlO	f1.O dB typical	A4A3
26	RF ATTENUATOR = 20 dB	f0.2 dB typical	A6A10, A12U8
27	30 dB	+0.2 dB typical	A6A10, A12U8
28	40 dB	f0.2 dB typical	A6A10, A12U8
29	50 dB	+0.2 dB typical	A6A10, A12U8
30	60 dB	+0.2 dB typical	A6A10, A12U8
31	70 dB	+0.2 dB typical	A6Al0, A12U8

* Specifications for all Resolution Bandwidths are referenced to the 1 MHz Resolution Bandwidth. The freauencv error terms are for error correction onlv.

Sweep System Block Diagram Description

The HP 8566B Spectrum Analyzer sweep system consists of the following modes:

Continuous Sweep; Free Run Trigger

Several different assemblies are involved in the HP 8566B sweep system. The Al6 Scan Generator generates the 0 to 10 V sweep ramp. The ramp converter on the A3A8 Analog-Digital Converter and the Digital Storage Processor Section digitize this ramp into a 10-bit sweep address. When the sweep address reaches the marker address, the Digital Storage Processor Section outputs a RSHS (Low = Reset High Sweep) pulse. This signal resets the High Sweep flip-flop on the A3Al Trigger assembly. HSWP (High Sweep) goes low and the current source charging the sweep capacitor on Al6 is shunted to ground, stopping the sweep ramp at its present value. The negative transition on the HSWP line generates a Service Request on Al2 Front-Panel Interface forcing LSRQ low which sets LSTP (Low Stop) high. This "wakes up" the Al5 Controller. The Controller then reads the sweep address from the Digital Storage Processor Section. If it corresponds to the end of the sweep, the Al5 Controller outputs a sweep reset command to the Al6 Scan Generator, resetting the sweep ramp to 0 V. After all Service Requests have been handled (LSRQ is high), the Al5 Controller starts the sweep by issuing a set HSWP command to the A3Al Trigger. The Al5 Controller then issues a stop command to the Al2 Front-Panel Interface assembly that forces LSTP low, stopping the Controller. After a 500 μs delay on A3Al Trigger, HSWP goes high, the sweep ramp starts, the Digital Storage Processor Section starts digitizing the ramp, and the front panel SWEEP LED lights indicating a sweep is in progress.

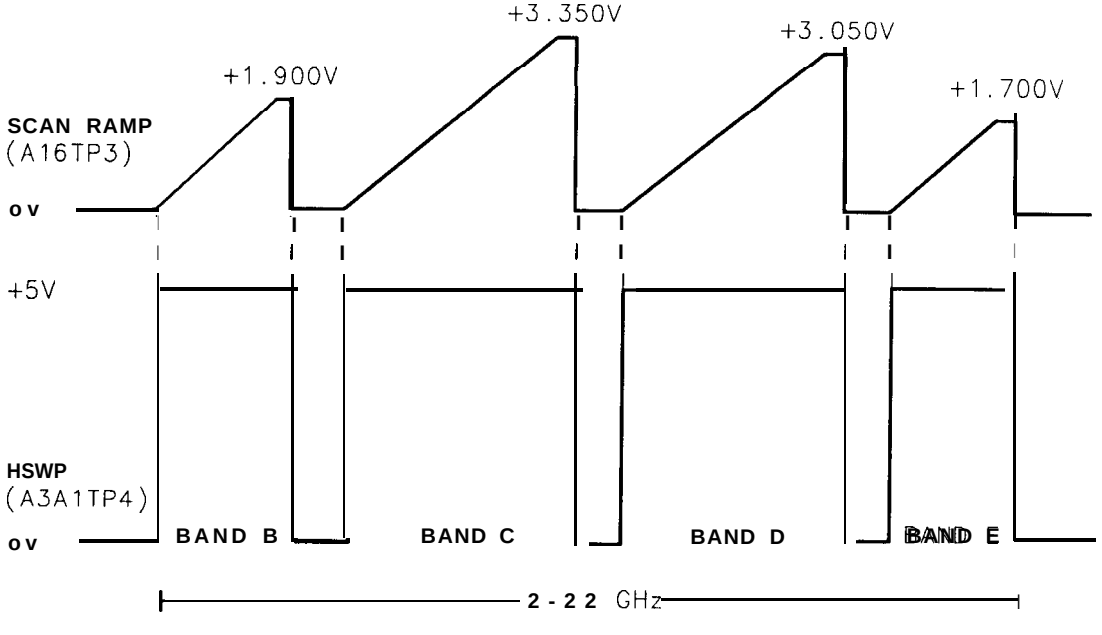

Figure 3. Sweep System Timing Example

Triggered Sweep

The triggered sweep modes are very similar to free run operation except that instead of the Al5 Controller outputting a set HSWP command to the A3Al Trigger assembly, it outputs a trigger enable command. The output of the trigger select circuit (line, external, or video) then clocks the HSWP line high.

Single Sweep

The single sweep mode is useful in troubleshooting the sweep system because it does not rely on feedback from Digital Storage before resetting the sweep generator. Whenever the SWEEP [SINGLE] key is pressed, the Al5 Controller resets the sweep generator and then sets HSWP high through the A3Al Trigger assembly. Digital Storage then stops the sweep when it has reached the end and the ramp resets to 0 V.

Fast Sweep

Fast sweep is enabled only for 0 Hz frequency spans and sweep times less than 20 ms. HSWP is forced low, and the Al6 Sweep Generator is not used. See A3Al Trigger for a description of the fast sweep operation.

Service Requests

Any of the Service Requests on the Al2 Front-Panel Interface will force LSRQ low which forces HSWP low. For example, when a front-panel key is depressed, a keyboard Service Request is generated. LSRQ goes low, LSTP goes high, and HSWP goes low stopping the sweep. Depending on which key was pressed, the Al5 Controller will either continue the sweep or reset it and start a new sweep. Note that the analyzer cannot sweep if any Service Requests are present.

Sweep System Troubleshooting

The following procedure is an aid to rapidly isolate sweep system malfunctions. When the malfunction has been traced to a single assembly, check the Service Sheets for that assembly for a more thorough troubleshooting procedure.

Isolate the Scan Sweep

Disconnect the ramp from A3A8Jl and jumper A3A8TPl to A3A8TP2. This forces the ramp comparator output high. The Digital Storage Processor Section should continue to process data and increment the sweep address. The HSWP light should be flashing and HSWP should have an approximately 16 ms pulse width. (Note that the instrument preset state may appear to be functioning properly but will become distorted as the sweep time is slowed down.) If this works, the Digital Storage Processor Section and Al5 Controller, Al2 Front-Panel Interface, and A3Al Trigger assemblies are operating properly. Suspect the ramp generator or Al6 Scan Generator or ramp converter on the A3A8 Analog-Digital Converter. To further isolate the scan generator, reconnect the sweep ramp to A3A8Jl and remove the jumper. Set the sweep time to 1 second and press the SWEEP [SINGLE] key. The ramp waveform will start at greater than 10 V, go to 0 V when the SWEEP [SINGLE] key is pressed, and ramp back

up to greater than 10 V. If the ramp waveform is correct, check the A3A8 ramp converter. Otherwise check the ramp generator on A16.

Isolate Digital Storage Processor Section If HSWP Stays High (SWEEP LED ON)

With the sweep ramp disconnected from A3A8Jl and A3A8TPl jumpered to A3A8TP2, check RSHS output for the presence of 60 ns low pulses. (The logic probe of the HP 5005A Signature Analyzer can be used to detect them.) If present, check A3Al Trigger. If not, check the Digital Storage Processor Section.

See A3Al Trigger Troubleshooting Procedure

Note that the A3Al Trigger assembly also generates and controls the fast sweep timing (sweeps less than 10 ms).

Table 3. Mnemonics Listing for RF Section

Mnemonic	Active State	Description
ADRO-4		Address Bits 0 through 4
ATN*	LOW	Attention True
BFC ON		Filter Capacitor IN
DAV*	LOW	Data Valid
DIOl-8	LOW	HP-IB Data Input/Output Bits
EOI*	LOW	End or Identify
HLE2	HIGH	Phase Lock Loop 2 Lock Enable
HLEY	HIGH	YTO Lock Enable
HOVH	HIGH	Oven Cold
HPON	HIGH	Power ON to IF-Display Section
HPUP	HIGH	Power Up
HSTD	HIGH	10 MHz Standard ON
HSWP	HIGH	Sweeping
HULl	HIGH	Phase Lock Loop 1 or 3 Unlocked
HUL2	HIGH	Phase Lock Loop 2 Unlocked
HULH	HIGH	Heterodyne Oscillator Unlocked
HULM	HIGH	M/N Unlocked
HULR	HIGH	REF Unlocked
HULY	HIGH	YTO Unlocked
HXRF	HIGH	External Reference
HYGH	HIGH	YTO Loop Gain High
IFC*	LOW	Interface Clear
IOBO-15	HIGH	[nstrument Bus Data Bits
KCO-7		Key Columns 0 through 7
KRO-11		Key Rows 0 through 11
LADR	LOW	-4ddress LED ON
LANR	LOW	Analog Reset
LAOS	LOW	Aux Out Strobe
LB10	LOW	RF Section I/O Strobe
LDAS	LOW	DAC Strobe
LIPS	LOW	Instrument Preset
LLED	LOW	LED Strobe
LMNE	LOW	M/N Output Enable
LRMT	LOW	Remove (High=Local)
LROMl-3	LOW	Enable ROM 3-State Outputs
LRTL	LOW	Local Button Pushed

Table 3. Mnemonics Listing for RF Section (continued)

Mnemonic	Active State	Description
LSAS	LOW	Scan Attenuator Strobe
LSBY	HIGH	Standby
LSRQ	LOW	Service Request
LSTP	LOW	Stop Al5 Controller
LSTS	LOW	Scan Time Strobe
LTGR	LOW	Tracking Generator Request
LTIO	LOW	IF-Display Section I/O Strobe
LYSP	LOW	YTO Span
Ml-5		M/N Loop-M Inputs
Nl-6		M/N Loop-N Inputs
N DAC*	HIGH	Data Accepted
N RFD*	HIGH	Ready for Data
REN*	LOW	Remote Enable
RPGl		Rotary Pulse
RPG2		Generator Lines
SAT1		Scan Integer
SAT2		Attenuator
SRQ*	LOW	Service Request
SW1		Switch 1 (AlOA7)
SW2		Switch 2 (AlOA7)
* --- -- nemonics		

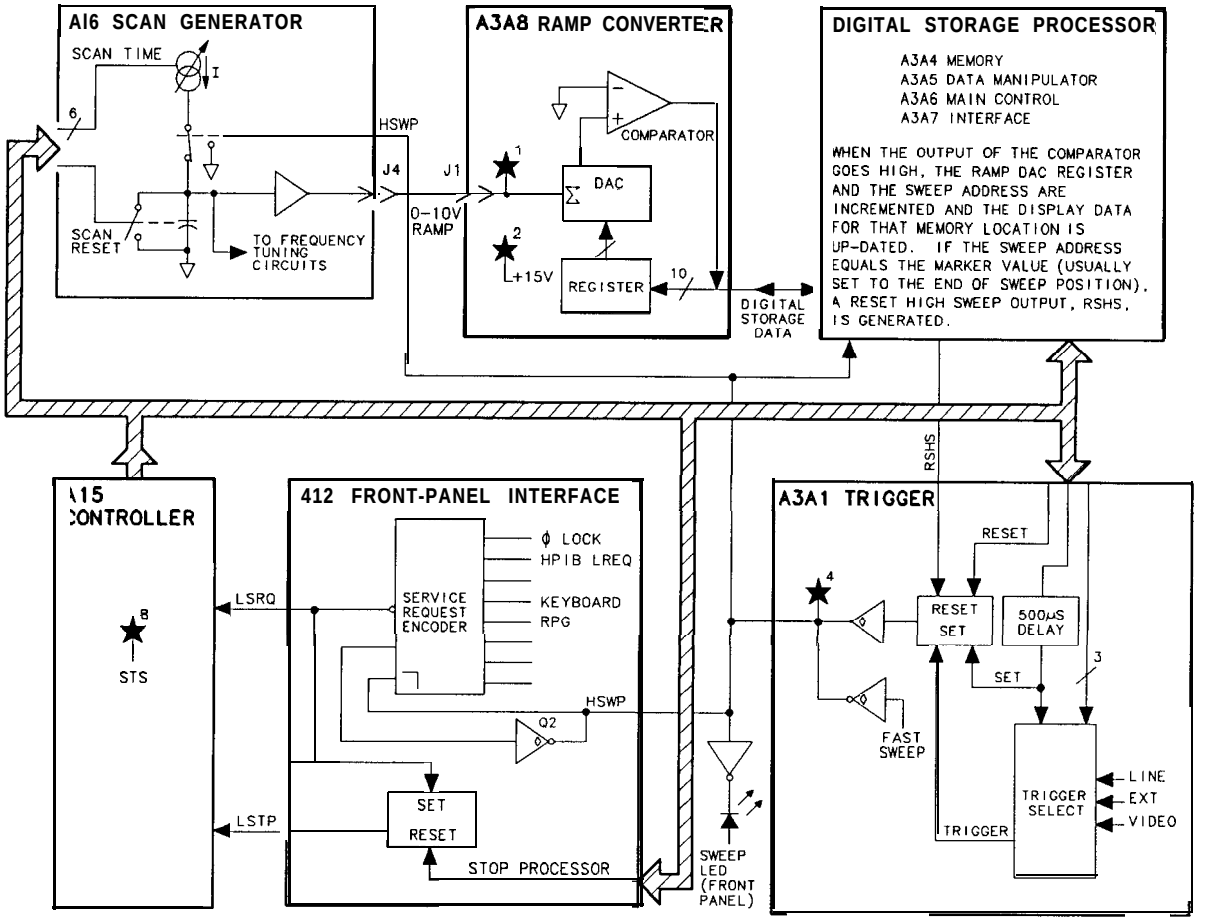

Figure 4. Sweep System Block Diagram

POWER SUPPLIES
A8 RECTIFIER → +22V
A17 POSITIVE REGULATOR → +20SW, +20V, +12V, +5.2V
A18 NEGATIVE REGULATOR → -5.2V, -10V, -40V

A6 RF MODULE
SIGNAL IN 0-22 GHz
INPUT ATTENUATOR A2 70 dB 10 dB STEP
RF SWITCH A1
LIMITER A14
FIRST CONVERTER A6: 2.5GHz LPF, 3.6GHz BPF
4.0 GHz LPF A18
3.6 GHz BPF A15
SECOND CONVERTER — SWITCH A4: LPF, 3621.4 MHz, +13 dBm
PIN DRIVE FROM A8A10 (B); 3.3 GHz ENABLE FROM A8A10 (C)
LAST CONVERTER A3: 321.4 MHz BPF, 321.4 MHz, 3.3 GHz YTO, 3.3GHz -10dBm
SLOPE COMP FROM A8A11 (A); STEP GAIN FROM A8A10 (D)
21.4 MHz; REF LVL CAL; REFERENCE LEVEL; AMPTD CAL A8R1
+6.2V; 300MHz
W1 21.4 MHz
2-22GHz; 1ST LO OUTPUT A8J2 +8 dBm
MISC BIAS AND DRIVER A10
YTX A8; 2-22GHz BPF; A8W5 2.3-6.1 GHz
ACLU A5: 3.8-6.1GHz +12 dBm; +18 dBm; 10 dB COUPLER; -10 dB COUPLER; 321MHz BPF 2-22GHz LOAD
A8W7 3.8-6.1GHz +12 dBm
A8W6 2.3-6.1 GHz +10dBm
LPF* A16; A8W14
IF OUTPUT A8J4; A8W13; 321.4 MHz
IF INPUT A8J5; A8W23
A8W12 TUNE VOLTAGE -10 ±0.5V
*1.5 GHz LPF (SERIAL PREFIXES: 2410A-2849A)
1.0 GHz LPF (SERIAL PREFIXES: 2950A AND ABOVE)
YTX BIAS
YTX CURRENT DRIVE A7
YTX SENSE
SLOPE COMP TO A8A3
BAND SWITCH
SLOPE GENERATOR A11
SWEEP TUNE -1V/GHz J4 R2 W3
BAND SWITCH
PRESEL PEAK
YTX DRIVER A12 J2
YTX TUNE
$f_{SIG} = f_{YTO} \pm 321.4$ MHz

f_{SIG} (GHz)	n
2.8-5.4 5.2-10.8 10.4-18.8 18.4-22	2+ 3+ 4+

$f_{SIG} = f_{YTO} - 3621.4$MHz LOW BAND
$f_{YTO} = 200N - 10W - f_{20/30}$ (MHz)
PHASE LOCK A9: J4 J5 J1 J2 J3; R X S; X3; 300MHz ≥19dBm; 3.3GHz -10dBm
TUNE VOLTAGE -10 ±0.5V A8W12
100 MHz -10dBm ± 0.5dB A8W16 A8J1 CAL OUTPUT
A8W2 100 MHz 0 dBm
A23W2 J4

A7 M/N REFERENCE
100 MHz W2 R1
400 MHz -10dBm A7A1W1 R1
M/N PHASE DETECTOR A1: J2 J3 J1
355-395MHz 0 dBm A7A2W1 P1
M/N OUTPUT A4: ÷M, ÷25-1818MHz, TUNE 355-395MHz, +2
$f_{M/N}$ 177.137MHz +3dBm; W3 J3
W2 100MHz 0dBm; A7A2W1 +10dBm
A7A3W2 20MHz 0 dBm
100 MHz 0dBm W7 R6
REFERENCE PHASE DETECTOR A1
100 MHz VCXO A2: X4, 100 MHz, 100 MHz 0dBm A7A1W1, J1 J2 J3 J4
÷5 ÷2 20 MHz
10 MHz; 10 MHz 0 dBm W16 J5; 10 MHz OUT
W4 10 MHz REF 0 dBm
W5 R5

A22 10 MHz FREQUENCY STANDARD
+22V +20SW HOVC
FREQ REFERENCE INT EXT
W12 R7; W15 J3; J2 W8 R0

A10 20/30 SYNTHESIZER
PLL2 DIVIDER A7: 10 MHz, ÷20
PLL2 PHASE DETECTOR A6: SAMPLE & HOLD, 500kHz, Z00.01-300, ÷N2
PLL2 DISCRIMINATOR A8: TUNING VOLTAGE, FREQUENCY DISCRIMINATOR, 100-150MHz 1001 STEPS 100kHz, TUNE DAC, SCAN IN
PLL2 VCO A5: 0.15-0.3MHz 0.8Vp-p ±0.2V, A10A7W1, 75-150MHz, 150-300MHz 10 MHz STEPS, 5-10MHz 200Hz STEPS, ÷5 ÷20, 5kHz STEPS (N2), 15-30MHz 1kHz STEPS, ÷5, SEE ADJACENT TABLE
YCO TUNE 1 TO 9 Vdc A10A5W1
A10A5W2 J3
PLL1 DIVIDER A2: 5MHz, ÷2
PLL1 VCO A1: 199-300 MHz, ÷10, 1 MHz OR 100 kHz STEPS (N1), SEE ADJACENT TABLE, SCAN IN 15-30MHz
PLL1 IF A3: 19.95 MHz, 7.60-13.9*, ÷N1, ÷2, 35-139.2 MHz -10 dBm, A10A2W1, 160.15-166 MHz, 199-300 MHz ~0dBm, A10A3W2
A10A1W1
A10A3W1 160.15-156MHz -20dBm
PLL3 UPCONVERTER A4: 100 MHz, X1.6, 160 MHz, 150 MHz 8 MHz, 160.15-166MHz, 200 Hz STEPS OR 10 Hz STEPS (N2)
SPANS ≤ 0.7MHz A10A4W1; SPANS 0.1-5MHz A10A1W1; 15-30MHz
A10A5W1 J1
A10A5W2 J2
SCAN IN A10A8W2 J2
50-WIRE INSTRUMENT BUS

FOR SPANS ≤ 5 MHz			
SPAN	5kHz-100kHz	100kHz-5kHz	5kHz-100Hz
TUNING RANGE	10MHz	10MHz	10MHz
STEP SIZE	1kHz	20Hz	1Hz
$f_{20/30}$	15MHz-30MHz	19.9MHz-30MHz	19.995MHz-30MHz
SWITCH POSITION	1	2	3

A11 YTO LOOP
SAMPLER A5: S, 15-30MHz; -15dBm A11W2
ATTENUATOR/6.2GHz LPF A7: 10dB
CPLR A1: -15dB COUPLER; A11W3
A11W1
15-30MHz 0 TO +8dBm A11W4
YTO PHASE DETECTOR A4: J4, +2, 7.5-15MHz, SAMPLE & HOLD, J1 J3
$f_{20/30}$ 15-30MHz -2dBm; W9 J3
A21 FM COIL DRIVER: -8V TO +8V A23W3, A23W4
YTO A3
A20 MAIN COIL DRIVER
YTO TUNE
-3V/GHz -6.964V TO -18.364V A23W2 R4
YTX TUNE
A19 DAC: 4 DECADE SCAN ATTEN; TUNE DAC
A23W1 SCAN OUT
A16 SCAN GENERATOR: INTEGER ANSWER ATTENUATOR; SPAN WIDTH DAC; AUX OUT OFFSET DAC; SCAN GENERATOR; SWEEP TIME DAC; SWEEP TIME REGISTER
SCAN OUT A10A8W2 J2
0 TO +10V
AUX OUT W13 J2-P3; SCAN OUT W14 J2-P4
J2-P1 TO 21.4MHz IF DISPLAY
J2 50-WIRE INSTRUMENT BUS TO IF DISPLAY

AT2 3dB PAD: f_{YTO} 2.3-6.1GHz +10dBm; W11
SERIAL PREFIXES 2532A AND ABOVE:
A12, A 3dB PADS INSTALLED TO REDUCE LO INPUT TO A6A5 TO +12 dBm.

A5A1 KEYBOARD
A12 FRONT-PANEL INTERFACE: HOVC, PHASE LOCK INDICATORS
A15 CONTROLLER: HP-IB J1; 50-WIRE INSTRUMENT BUS

SPECTRUM ANALYZER, OVERALL BLOCK DIAGRAM (1 OF 3)

RF SECTION

DISPLAY SECTION

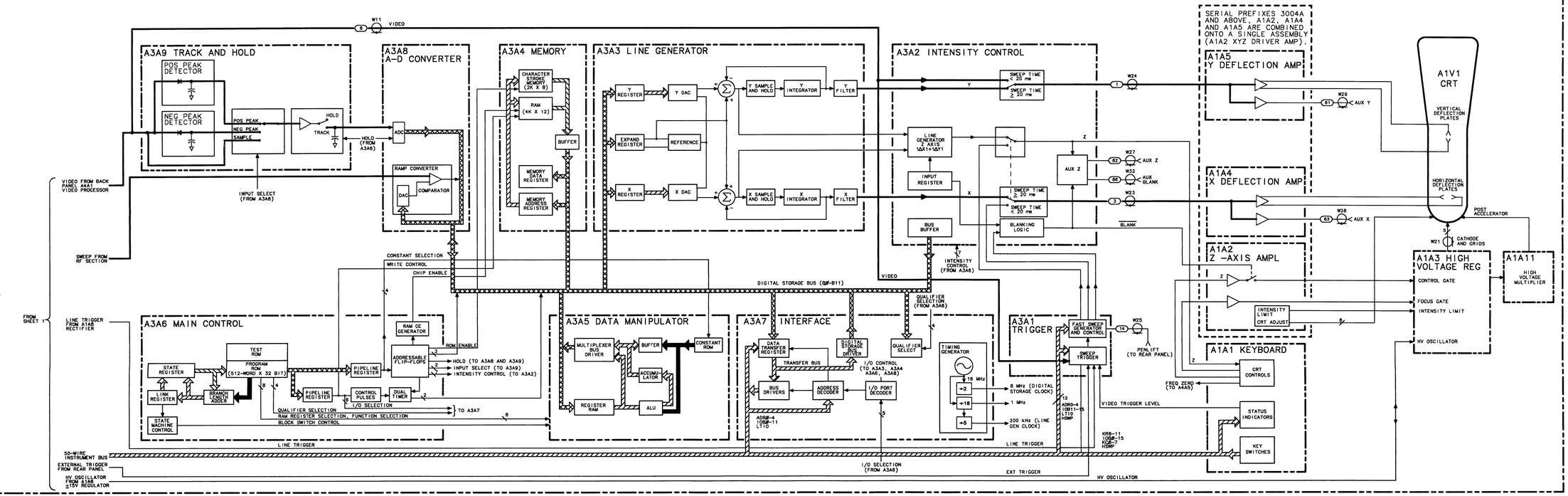

NOTE:
UNLESS OTHERWISE INDICATED, POWER LEVELS ARE MEASURED UNDER THE FOLLOWING CONDITIONS USING AN ACTIVE PROBE AND THE SPECTRUM ANALYZER:

INSTRUMENT PRESET

CENTER FREQUENCY	20 MHz
FREQUENCY SPAN	0 Hz
ATTENUATION	0 dB
RESOLUTION BW	3 kHz

SPECTRUM ANALYZER OVERALL BLOCK DIAGRAM (2 OF 3)

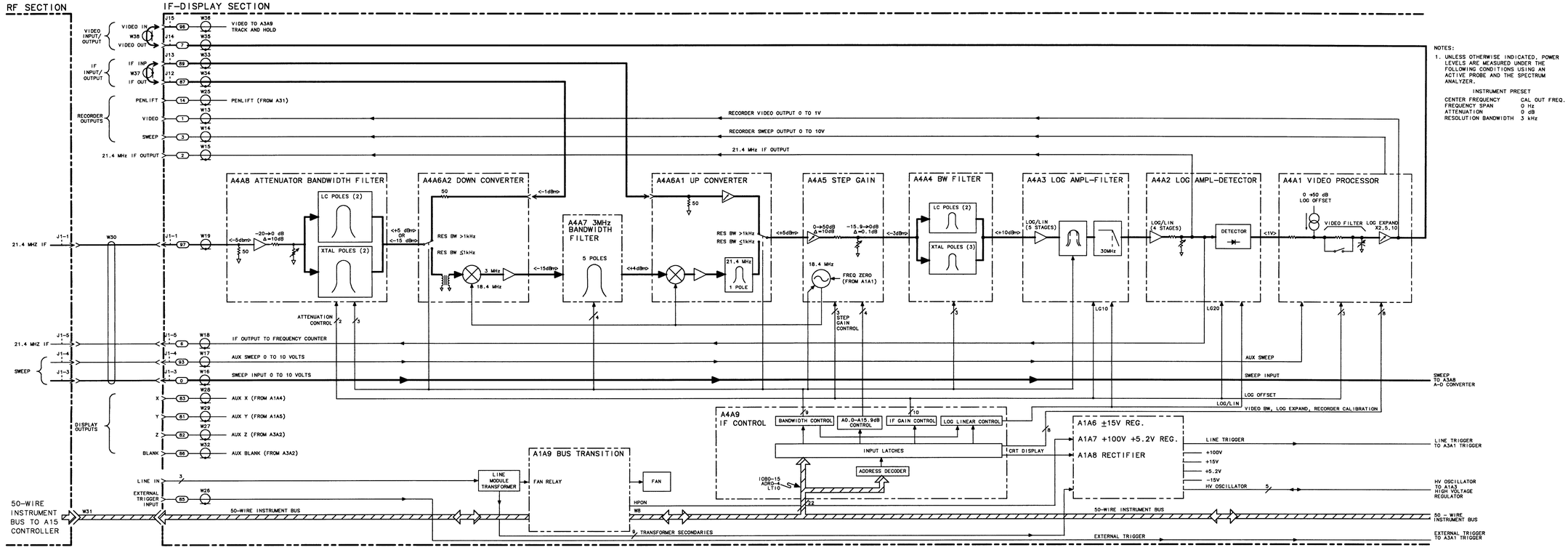

SPECTRUM ANALYZER OVERALL BLOCK DIAGRAM (3 OF 3)

Analog Troubleshooting

Phase Lock Loops Principles of Operation

General Description

The fundamental RF signal input to the A6 RF Module (2 to 6.2 GHz) is generated by the A11A3 YTO (YIG-Tuned Oscillator). This signal is phase-locked, through other phase-lock loops, to the A22 10 MHz Standard (internal crystal oscillator). The YTO Loop pretunes and locks the YTO signal to the output of the M/N Loop (part of A7) and the A10 20/30 Loop. The M/N and 20/30 Loops serve two basic functions. First, they phase-lock the YTO Loop to the 10 MHz Standard through the Reference Loop (part of A7). They also provide the stepped tuning of the YTO output signal. The M/N Loop provides the larger steps (2000 to 6199 MHz in 10 MHz steps) while the 20/30 Loop provides the smaller (1 MHz to 1 Hz) steps.

All phase lock loops are referenced, either directly or indirectly, to the A22 10 MHz Standard. Figure 1. shows the relationship between the various loops as well as defining the assemblies associated with the loops.

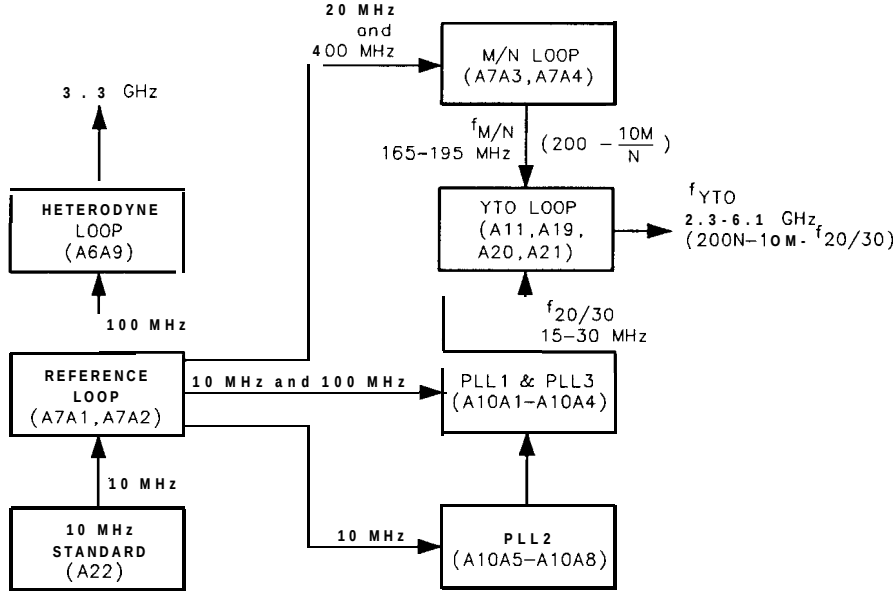

Figure 1. Phase Lock Loops (Synthesizer), Block Diagram

Reference Loop (Part of A7)

The Reference Loop is phase-locked to the A22 10 MHz Standard and its phase-locked outputs (10, 20, 100, and 400 MHz) are used as references for the 20/30 Loop, the M/N Loop, and the Heterodyne Loop (part of A6). The 10 MHz signal is also used as an auxiliary rear-panel output.

The A7A2 100 MHz VCXO (Voltage-Controlled Crystal Oscillator) is the heart of this loop. The 100 MHz output signal is 1) routed to the A6A9 Phase Lock assembly to be used as a reference for the Heterodyne Loop and as the front-panel CAL OUTPUT signal, 2) routed to the A10A3 PLL3 Up Converter to be used as a reference for that phase-lock loop, 3) multiplied by four to produce the reference signal for the M/N Loop (A7A3 M/N Phase Detector), and 4) divided by five to produce a 20 MHz reference signal also used by the M/N Loop. The 20 MHz signal is divided by two to produce a 10 MHz signal which is used as a reference for the PLL1 and PLL2 phase-lock loops in the 20/30 Loop and also as the rear-panel auxiliary output. The 10 MHz signal is also phase compared to the output of the A22 10 MHz Standard. The resulting error signal is used to tune the 100 MHz VCXO to phase-lock the Reference Loop.

M/N Loop (Part of A7)

The frequency output of the M/N Loop is dependent on the front-panel Start Frequency/Center Frequency and in part, controls the YTO output frequency. This signal is disabled during sweeps when the frequency span is greater than 5 MHz (fundamental mixing). An encoded equivalent of the front-panel frequency's most significant digits are input to the M/N Loop as M and N numbers. The ratio of the M and N numbers determines the M/N OUT ($f_{M/N}$) frequency and are chosen such that the Nth harmonic (same as the divider number) of $f_{M/N}$ tunes in exactly 10 MHz increments as M is changed. There is one 10 MHz step for each valid $f_{M/N}$ frequency (M/N ratio) and Nth harmonic (N number). Refer to Table 2 for a complete list of M and N numbers and resulting $f_{M/N}$ frequencies. This 10 MHz step complements the 20/30 Loop whose tuning range is 10 MHz and step size is 1 Hz. Together, the M/N loop, YTO pretuning, and 20/30 Loop are able to tune the A11A3 YTO from 2000.000 000 to 6199.999 999 MHz in 1 Hz steps.

YTO Loop (All)

Whenever a change is made to the Start Frequency/Center Frequency (from the front panel or remote controller), the YTO is pretuned near the desired new frequency. This is done by encoded information being sent from the Al2 Front-Panel Interface to the A19 DAC (Digital-to-Analog Converter) which generates and routes an analog voltage to the A20 Main Coil Driver. The Main Coil Driver, in turn, generates a tuning current to tune the YTO. This places the YTO frequency 20 to 30 MHz below the Nth harmonic of the M/N Loop output ($f_{M/N}$). For frequency spans greater than 5 MHz, the YTO frequency is locked at the start of each sweep with the M/N loop and the 20/30 loop to a 1 Hz resolution. The YTO signal (f_{YTO}) and the M/N Loop output signal ($f_{M/N}$) are mixed in the A11A5 Sampler (harmonic mixer) to produce the YTO IF (f_{YTOIF}) signal. This 20 to 30 MHz signal is phase compared to the 20/30 Loop output signal ($f_{20/30}$) in the A11A4 YTO Phase Detector producing a dc error voltage. It should be noted that f_{YTOIF} and $f_{20/30}$ are equal when the YTO Loop is phase-locked. This error voltage is stored in a capacitor, the loop (YTO) opened, and a sweep taken. The loop is relocked at the start of each sweep. If the frequency span is less than 5 MHz, the YTO Loop is always locked and is forced to sweep by following the swept oscillator

reference ($f_{20/30}$) from PLL2 in the 20/30 Loop which is either applied directly to the YTO or divided down and summed into PLL2 and PLL1 and then applied to the YTO.

When the frequency span is less than 25 kHz, the loop gain of the YTO Loop is increased by approximately 10 dB to provide better performance. This is performed by control signal HYGH (High = YTO Loop Gain High) being placed in a High state.

20/30 Loop (A10)

The 20/30 Loop translates tuning data for the seven least significant digits of the YTO frequency (2 to 6.2 GHz) into frequencies from 30 to 20.000 001 MHz. This translation is quite straightforward and the resulting output frequency can be calculated by the following equation:

$f_{20/30} = 30 - x.xxx\ xxx$ MHz

where x.xxx xxx is the seven least significant digits of the YTO frequency.

This process of frequency translation is used to tune the YTO over a 10 MHz range in 1 Hz steps (1 Hz steps in zero frequency span) and uses three complete phase-lock loops (PLL1, PLL2, and PLL3) to achieve this.

Phase Lock Loop 2 (PLL2) provides a low-frequency (20 to 30 MHz) reference ($f_{20/30}$) to the YTO Loop for frequency spans between approximately 100 kHz and 5 kHz. This loop is locked at the start of each sweep, the error voltage stored in a capacitor, the loop unlocked, and a sweep taken. For frequency spans of less than approximately 100 kHz and greater than 5 kHz, the 20 to 30 MHz output is divided by 5 and applied as an input to Phase Lock Loop 3 (PLL3) and Phase Lock Loop 1 (PLL1). The output of PLL1/PLL3 then serves as the reference input ($f_{20/30}$) to the YTO Loop. If the frequency span is 5 kHz or smaller, the output of PLL2 is divided by 100 and applied to PLL3.

Heterodyne Loop (Part of A6)

The Heterodyne Loop (A6A9) consists of a 3.3 GHz oscillator located in the A6A4 Second Converter that is locked to the 100 MHz VCXO in the A7A2 assembly. The 100 MHz signal drives the Sampler in the A6A9 Phase Lock assembly which produces a dc output proportional to the phase difference between the 33rd harmonic of 100 MHz and the 3.3 GHz oscillator output signal being sampled. This dc output is amplified and used to drive the 3.3 GHz oscillator to achieve phase lock. If the loop is unlocked, a search oscillator (in the A6A9) turns on and sweeps the 3.3 GHz VCO until phase-lock is again achieved. The Heterodyne loop is used only for start frequencies of less than 2 GHz.

Troubleshooting Information

Troubleshooting Table

Table 1 correlates CRT phase-lock error messages with the probable faulty phase-lock loop and associated assemblies. This is especially helpful in determining the faulty loop when more than one phase-lock error message is displayed.

Table 1. Troubleshooting Using CRT Unlock Messages

Message (UNLOCK)	Probable Faulty Loop	Associated Assemblies
PL1	Phase Lock Loop 1	A10A1 to A10A4
PL2	Phase Lock Loop 2	A10A5 to A10A8
REF	Reference Loop	A7A1, A7A2, A22
YTO	YTO Loop	A19, A20, A21, All
M/N	M/N Loop	A7A3, A7A4
HET	Heterodyne Loop	A6A9, A6A4
PL1, PL2	Phase Lock Loop 2	A10A5 to A10A8
PL1, YTO	Phase Lock Loop 1	A10A1 to A10A4
PL1, PL2, YTO	Phase Lock Loop 2	A10A5 to A10A8
REF, PL1, PL2	Reference Loop	A7A1, A7A2, A22
REF, M/N, YTO	Reference Loop	A7A1, A7A2, A22
M/N, YTO	M/N Loop	A7A3, A7A4
HET, REF	Reference Loop	A7A1, A7A2, A22

Start Frequency Tuning Equations and Phase Lock Troubleshooting

General

Phase-lock loop troubleshooting is much easier if it is understood how the start frequency is derived. The Diagnostic Functions of the spectrum analyzer can also be used to simplify troubleshooting of the phase-lock loop.

The simplified block diagram at the back of this chapter shows the assemblies involved in setting the start frequency. The HP 8566B has two tuning modes. For frequency spans greater than 5 MHz, a method called lock and roll is used. This basically involves phase locking the analyzer start frequency during the retrace period prior to the beginning of a new scan. For frequency spans of 5 MHz and less, the YTO Loop is phase-locked during all of a sweep, and the stable 20/30 Loop PLL2 is swept.

The equation for start frequency is:

$f_{SF}\ (B \times (N \times f_{M/N} - f_{20/30})) + f_{IF}$

Where:

f_{SF} = Start Frequency

B = band number. KSR displays the value of B which varies from 0 to 4. When the displayed value is 0 (low band), use 1 as a multiplier.

N = N number for M/N Loop. KSR displays the value of N which varies from 11 to 32.

$f_{M/N}$ = M/N loop frequency in MHz. KSR displays the value which ranges from 177 to 197 MHz.

$f_{20/30}$ = Synthesizer frequency in MHz. KSR displays the value which ranges from 20 to 30 MHz.

f_{IF} = Signal IF frequency. The value is -3621.4 MHz for band 0, -321.4 MHz for band 1, and +321.4 MHz for bands 2, 3, and 4.

Note



For a detailed explanation of the Frequency Diagnostic Function (KSR), see Diagnostic Functions in the Spectrum Analyzer Overall Troubleshooting Section of this manual.

As an example, these values are used following an INSTR PRESET ([2-22 GHz] pressed) to determine the start frequency.

B = 1 N = 13

$f_{M/N}$ 180.769231 MHz

$f_{20/30}$ = 28.600000

f_{IF} = -321.4 MHz

Substitute these values into the equation.

f_{SF} = (1 x(13 x 180 x 769231 MHz) − 28.600000 MHz) − 321.4 MHz = 2000.0 MHz

M/N Loop Tuning

The frequency output of the M/N Loop is dependent on the ratio of M and N numbers. These numbers are input in the form of digital tuning information to the M/N Loop Phase Detector. The following equation shows the relationship between the output frequency and the M and N numbers.

$f_{M/N} = (200 - 10(M/N))$ MHz

Where:

$f_{M/N}$ = M/N output frequency

M = M number which varies from 8 - 27. KSR displays the value of M.

N = N number which varies from 11 - 32. KSR displays the value of N.

The M and N numbers are selected such that the M/N Loop output pretunes the YTO frequency in 10 MHz steps. For a listing of the M and N numbers, M/N output frequencies

$(f_{M/N})$, and the YTO frequencies, refer to Table 2, M and N Numbers and Resulting Frequencies.

20/30 Synthesizer Tuning

When a start frequency change occurs, the YTO is pretuned near the new desired frequency by the A19 Digital-Analog Converter and A20 Main Coil Driver. This places the YTO frequency 20 to 30 MHz below the Nth harmonic of the M/N Loop output. (The Nth harmonic is the same as the M/N Loop's N number.) The YTO frequency and the M/N Loop harmonic are mixed in the A11A5 Sampler. The YTO IF (20- 30 MHz) is phase compared with the 20/30 Synthesizer output. The A11A4 Phase Detector's error voltage is then used to tune the YTO through the A21 FM Coil Driver and the A20 Main Coil Driver to achieve phase-lock.

The 20/30 Synthesizer is used to pretune the YTO in 1 Hz steps (in zero frequency span) through a 10 MHz range. The following formula expresses the relationship between the frequencies found in the YTO Loop.

$$f_{20/30} (N \times f_{M/N}) - f_O = f_{YTOIF}$$

Where:

$f_{20/30}$ = 20/30 Synthesizer frequency. (Displayed with KSR.)

N = N number, varies from 11 - 32. (KSR displays value of N.)

$f_{M/N}$ = M/N Loop frequency

f_O = YTO frequency

f_{YTOIF} = YTO IF frequency

The 20/30 Synthesizer frequency can also be determined by using the YTO frequency set. This frequency is available by using KSR. In this case,

$$f_{20/30} = (30.000000 - D_7\ D_6\ D_5\ D_4\ D_3\ D_2\ D_1)$$

Where:

D_1 to D_7 is the YTO frequency displayed with D_1 being the least significant digit (1 Hz).

Marker Mode

When the MARKER NORMAL mode is selected, the analyzer does the following. First, the center frequency is determined. Because the NORMAL marker is a display marker, after the center frequency is calculated, the position of the marker on the display is determined. By knowing that the display consists of 1000 points and the programmed frequency span, the processor calculates the offset between the center frequency and the marker. The frequency span accuracy is the major cause of error in the readout accuracy of the MARKER NORMAL mode.

Phase Lock Loop Troubleshooting

If one of the phase-lock error messages appears, a loop has failed. Start the troubleshooting procedure by determining if the malfunction is dependent on Center Frequency, Frequency Span, etc. Next, break the suspected loop and measure the power levels as indicated on the RF Section Analog Block Diagram. Even with the oscillators at the extremes of their ranges, the power levels must be within the limits indicated. The loop frequencies can be counted and compared with the programmed frequencies listed by KSR by inserting a tee connector into the loop.

The Lock Indicator Disable jumper (A12TP2 to A12TP3) may be necessary if the keyboard is locked out. Use the information from the Diagnostic Function and the Start Frequency Tuning Equations to narrow the fault to a single assembly.

Table 2. M and N Numbers and Resulting Frequencies

YTO Start Freq MHz	M	N	M/N MHz	YTO Start Freq MHz	M	N	M/N MHz
2000	17	11	184.545455	2300	27	13	179.230769
2010	16	11	185.454545	2310	26	13	180.000000
2020	15	11	186.363636	2320	25	13	180.769231
2030	14	11	187.272727	2330	24	13	181.538462
2040	13	11	188.181818	2340	23	13	182.307692
2050	12	11	189.090909	2350	22	13	183.076923
2060	11	11	190.000000	2360	21	13	183.846154
2070	10	11	190.909091	2370	20	13	184.615385
2080	9	11	191.818182	2380	19	13	185.384615
2090	8	11	192.727273	2390	18	13	186.153846
2100	27	12	177.500000	2400	17	13	186.923077
2110	26	12	178.333333	2410	16	13	187.692308
2120	25	12	179.166667	2420	15	13	188.461538
2130	24	12	180.000000	2430	14	13	189.230769
2140	23	12	180.833333	2440	13	13	190.000000
2150	22	12	181.666667	2450	12	13	190.769231
2160	21	12	182.500000	2460	11	13	191.538462
2170	20	12	183.333333	2470	10	13	192.307692
2180	19	12	184.166667	2480	9	13	193.076923
2190	18	12	185.000000	2490	8	13	193.846154
2200	17	12	185.833333	2500	27	14	180.714286
2210	16	12	186.666667	2510	26	14	181.428571
2220	15	12	187.500000	2520	25	14	182.142857
2230	14	12	188.333333	2530	24	14	182.857143
2240	13	12	189.166667	2540	23	14	183.571429
2250	12	12	190.000000	2550	22	14	184.285714
2260	11	12	190.833333	2560	21	14	185.000000
2270	10	12	191.666667	2570	20	14	185.714286
2280	9	12	192.500000	2580	19	14	186.428571
2290	8	12	193.333333	2590	18	14	187.142857

Table 2. M and N Numbers and Resulting Frequencies (continued)

YTO Start Freq MHz	M	N	M/N MHz	YTO Start Freq MHz	M	N	M/N MHz
2600	17	14	187.857143	2900	27	16	183.125000
2610	16	14	188.571429	2910	26	16	183.750000
2620	15	14	189.285714	2920	25	16	184.375000
2630	14	14	190.000000	2930	24	16	185.000000
2640	13	14	190.714286	2940	23	16	185.625000
2650	12	14	191.428571	2950	22	16	186.250000
2660	11	14	192.142857	2960	21	16	186.875000
2670	10	14	192.857143	2970	20	16	187.500000
2680	9	14	193.571429	2980	19	16	188.125000
2690	8	14	194.285714	2990	18	16	188.750000
2700	27	15	182.000000	3000	17	16	189.375000
2710	26	15	182.666667	3010	16	16	190.000000
2720	25	15	183.333333	3020	15	16	190.625000
2730	24	15	184.000000	3030	14	16	191.250000
2740	23	15	184.666667	3040	13	16	191.875000
2750	22	15	185.333333	3050	12	16	192.500000
2760	21	15	186.000000	3060	11	16	193.125000
2770	20	15	186.666667	3070	10	16	193.750000
2780	19	15	187.333333	3080	9	16	194.375000
2790	18	15	188.000000	3090	8	16	195.000000
2800	17	15	188.666667	3100	27	17	184.117647
2810	16	15	189.333333	3110	26	17	184.705882
2820	15	15	190.000000	3120	25	17	185.294118
2830	14	15	190.666667	3130	24	17	185.882353
2840	13	15	191.333333	3140	23	17	186.470588
2850	12	15	192.000000	3150	22	17	187.058824
2860	11	15	192.666667	3160	21	17	187.647059
2870	10	15	193.333333	3170	20	17	188.235294
2880	9	15	194.000000	3180	19	17	188.823529
2890	8	15	194.666667	3190	18	17	189.411765

Table 2. M and N Numbers and Resulting Frequencies (continued)

YTO Start Freq MHz	M	N	M/N MHz
3200	17	17	190.000000
3210	16	17	190.588235
3220	15	17	191.176471
3230	14	17	191.764706
3240	13	17	192.352941
3250	12	17	192.941176
3260	11	17	193.529412
3270	10	17	194.117647
3280	9	17	194.705882
3290	8	17	195.294118
3300	27	18	185.000000
3310	26	18	185.555556
3320	25	18	186.111111
3330	24	18	186.666667
3340	23	18	187.222222
3350	22	18	187.777778
3360	21	18	188.333333
3370	20	18	188.888889
3380	19	18	189.444444
3390	18	18	190.000000
3400	17	18	190.555556
3410	16	18	191.111111
3420	15	18	191.666667
3430	14	18	192.222222
3440	13	18	192.777778
3450	12	18	193.333333
3460	11	18	193.888889
3470	10	18	194.444444
3480	9	18	195.000000
3490	8	18	195.555556
3500	27	19	185.789474
3510	26	19	186.315789
3520	25	19	186.842105
3530	24	19	187.368421
3540	23	19	187.894737
3450	22	19	188.421053
3560	21	19	188.947368
3570	20	19	189.473684
3580	19	19	190.000000
3590	18	19	190.526316
3600	17	19	191.052632
3610	16	19	191.578947
3620	15	19	192.105263
3630	14	19	192.631579
3640	13	19	193.157895
3650	12	19	193.684211
3660	11	19	194.210526
3670	10	19	194.736842
3680	9	19	195.263158
3690	8	19	195.789474
3700	27	20	186.500000
3710	26	20	187.000000
3720	25	20	187.500000
3730	24	20	188.000000
3740	23	20	188.500000
3750	22	20	189.000000
3760	21	20	189.500000
3770	20	20	190.000000
3780	19	20	190.500000
3790	18	20	191.000000

Table 2. M and N Numbers and Resulting Frequencies (continued)

YTO Start Freq MHz	M	N	M/N MHz
3800	17	20	191.500000
3810	16	20	192.000000
3820	15	20	192.500000
3830	14	20	193.000000
3840	13	20	193.500000
3850	12	20	194.000000
3860	11	20	194.500000
3870	10	20	195.000000
3880	9	20	195.500000
3890	8	20	196.000000
3900	27	21	187.142857
3910	26	21	187.619048
3920	25	21	188.095238
3930	24	21	188.571429
3940	23	21	189.047619
3950	22	21	189.523810
3960	21	21	190.000000
3970	20	21	190.476190
3980	19	21	190.952381
3990	18	21	191.428571
4000	17	21	191.904762
4010	16	21	192.380952
4020	15	21	192.857143
4030	14	21	193.333333
4040	13	21	193.809524
4050	12	21	194.285714
4060	11	21	194.761905
4070	10	21	195.238095
4080	9	21	195.714286
4090	8	21	196.190476

YTO Start Freq MHz	M	N	M/N MHz
4100	27	22	187.727273
4110	26	22	188.181818
4120	25	22	188.636364
4130	24	22	189.090909
4140	23	22	189.545455
4150	22	22	190.000000
4160	21	22	190.454545
4170	20	22	190.909091
4180	19	22	191.363636
4190	18	22	191.818182
4200	17	22	192.272727
4210	16	22	192.727273
4220	15	22	193.181818
4230	14	22	193.636364
4240	13	22	194.090909
4250	12	22	194.545455
4260	11	22	195.000000
4270	10	22	195.454545
4280	9	22	195.909091
4290	8	22	196.363636
4300	27	23	188.260870
4310	26	23	188.695652
4320	25	23	189.130435
4330	24	23	189.565217
4340	23	23	190.000000
4350	22	23	190.434783
4360	21	23	190.869565
4370	20	23	191.304348
4380	19	23	191.739130
4390	18	23	192.173913

Table 2. M and N Numbers and Resulting Frequencies (continued)

YTO Start Freq MHz	M	N	M/N MHz
4400	17	23	192.608696
4410	16	23	193.043478
4420	15	23	193.478261
4430	14	23	193.913043
4440	13	23	194.347826
4450	12	23	194.782609
4460	11	23	195.217391
4470	10	23	195.652174
4480	9	23	196.086957
4490	8	23	196.521739
4500	27	24	188.750000
4510	26	24	189.166667
4520	25	24	189.583333
4530	24	24	190.000000
4540	23	24	190.416667
4550	22	24	190.833333
4560	21	24	191.250000
4570	20	24	191.666667
4580	19	24	192.083333
4590	18	24	192.500000
4600	17	24	192.916667
4610	16	24	193.333333
4620	15	24	193.750000
4630	14	24	194.166667
4640	13	24	194.583333
4650	12	24	195.000000
4660	11	24	195.416667
4670	10	24	195.833333
4680	9	24	196.250000
4690	8	24	196.666667

YTO Start Freq MHz	M	N	M/N MHz
4700	27	25	189.200000
4710	26	25	189.600000
4720	25	25	190.000000
4730	24	25	190.400000
4740	23	25	190.800000
4750	22	25	191.200000
4760	21	25	191.600000
4770	20	25	192.000000
4780	19	25	192.400000
4790	18	25	192.800000
4800	17	25	193.200000
4810	16	25	193.600000
4820	15	25	194.000000
4830	14	25	194.400000
4840	13	25	194.800000
4850	12	25	195.200000
4860	11	25	195.600000
4870	10	25	196.000000
4880	9	25	196.400000
4890	8	25	196.800000
4900	27	26	189.615385
4910	26	26	190.000000
4920	25	26	190.384615
4930	24	26	190.769231
4940	23	26	191.153846
4950	22	26	191.538462
4960	21	26	191.923077
4970	20	26	192.307692
4980	19	26	192.692308
4990	18	26	193.076923

Table 2. M and N Numbers and Resulting Frequencies (continued)

YTO Start Freq MHz	M	N	M/N MHz	YTO Start Freq MHz	M	N	M/N MHz
5000	17	26	193.461538	5300	27	28	190.357143
5010	16	26	193.846154	5310	26	28	190.714286
5020	15	26	194.230769	5320	25	28	191.071429
5030	14	26	194.615385	5330	24	28	191.428571
5040	13	26	195.000000	5340	23	28	191.785714
5050	12	26	195.384615	5350	22	28	192.142857
5060	11	26	195.769231	5360	21	28	192.500000
5070	10	26	196.153846	5370	20	28	192.857143
5080	9	26	196.538462	5380	19	28	193.214286
5090	8	26	196.923077	5390	18	28	193.571429
5100	27	27	190.000000	5400	17	28	193.928571
5110	26	27	190.370370	5410	16	28	194.285714
5120	25	27	190.740741	5420	15	28	194.642857
5130	24	27	191.111111	5430	14	28	195.000000
5140	23	27	191.481481	5440	13	28	195.357143
5150	22	27	191.851852	5450	12	28	195.714286
5160	21	27	192.222222	5460	11	28	196.071429
5170	20	27	192.592593	5470	10	28	196.428571
5180	19	27	192.962963	5480	9	28	196.785714
5190	18	27	193.333333	5490	8	28	197.142857
5200	17	27	193.703704	5500	27	29	190.689655
5210	16	27	194.074074	5510	26	29	191.034483
5220	15	27	194.444444	5520	25	29	191.379310
5230	14	27	194.814815	5530	24	29	191.724138
5240	13	27	195.185185	5540	23	29	192.068966
5250	12	27	195.555556	5550	22	29	192.413793
5260	11	27	195.925926	5560	21	29	192.758621
5270	10	27	196.296296	5570	20	29	193.103448
5280	9	27	196.666667	5580	19	29	193.448276
5290	8	27	197.037037	5590	18	29	193.793103

Table 2. M and N Numbers and Resulting Frequencies (continued)

YTO Start Freq MHz	M	N	M/N MHz
5600	17	29	194.137931
5610	16	29	194.482759
5620	15	29	194.827586
5630	14	29	195.172414
5640	13	29	195.517241
5650	12	29	195.862069
5660	11	29	196.206897
5670	10	29	196.551724
5680	9	29	196.896552
5690	8	29	197.241379
5700	27	30	191.000000
5710	26	30	191.333333
5720	25	30	191.666667
5730	24	30	192.000000
5740	23	30	192.333333
5750	22	30	192.666667
5760	21	30	193.000000
5770	20	30	193.333333
5780	19	30	193.666667
5790	18	30	194.000000
5800	17	30	194.333333
5810	16	30	194.666667
5820	15	30	195.000000
5830	14	30	195.333333
5840	13	30	195.666667
5850	12	30	196.000000
5860	11	30	196.333333
5870	10	30	196.666667
5880	9	30	197.000000
5890	8	30	197.333333
5900	27	31	191.290323
5910	26	31	191.612903
5920	25	31	191.935484
5930	24	31	192.258065
5940	23	31	192.580645
5950	22	31	192.903226
5960	21	31	193.225806
5970	20	31	193.548387
5980	19	31	193.870968
5990	18	31	194.193548
6000	17	31	194.516129
6010	16	31	194.838710
6020	15	31	195.161290
6030	14	31	195.483871
6040	13	31	195.806452
6050	12	31	196.129032
6060	11	31	196.451613
6070	10	31	196.774194
6080	9	31	197.096774
6090	8	31	197.419355
6100	27	32	191.562500
6110	26	32	191.875000
6120	25	32	192.187500
6130	24	32	192.500000
6140	23	32	192.812500
6150	22	32	193.125000
6160	21	32	193.437500
6170	20	32	193.750000
6180	19	32	194.062500
6190	18	32	194.375000

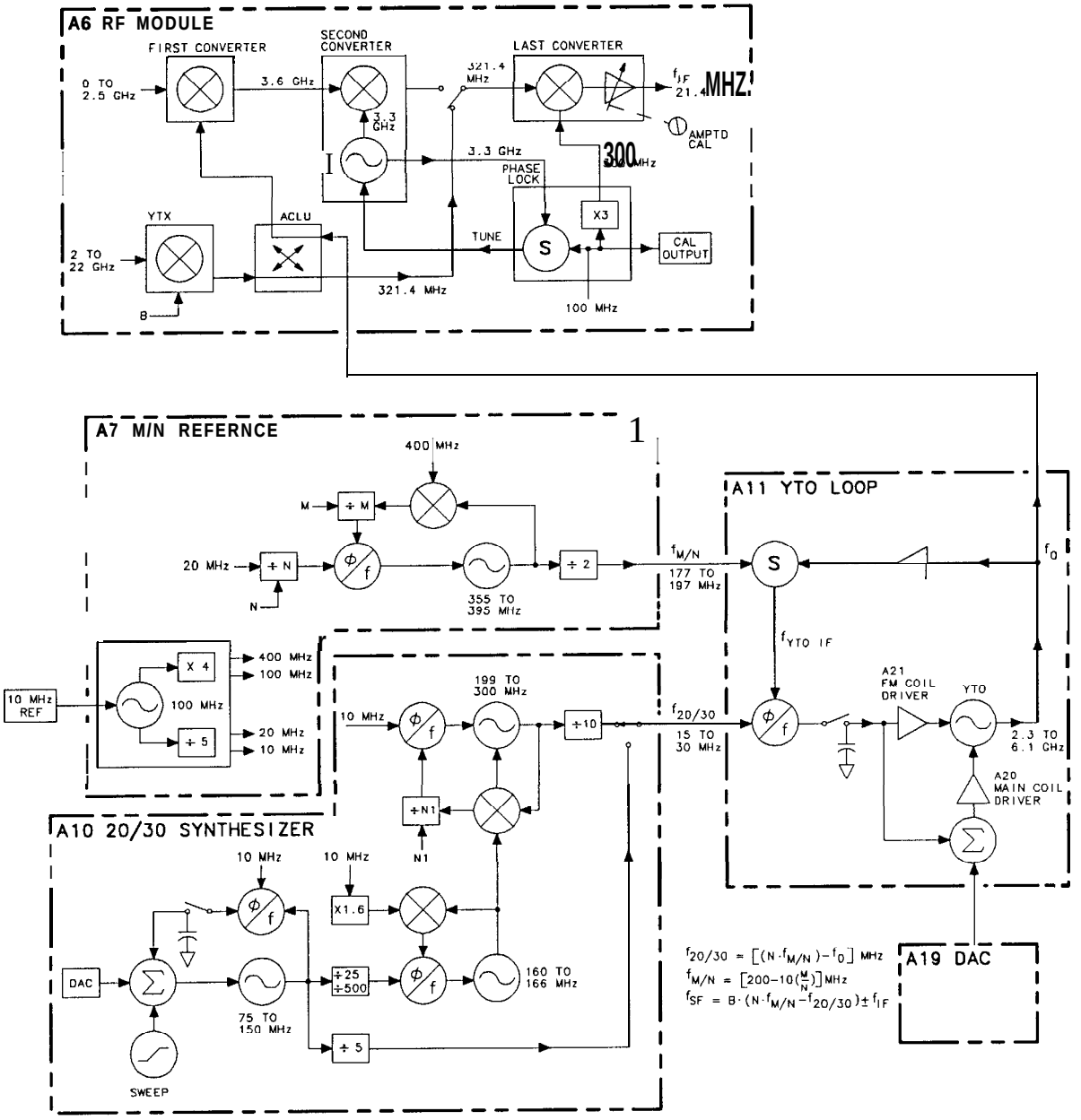

Simplified RF Block Diagram

Digital Troubleshooting

Preliminary Checks

Instrument Preset Check

The two red INSTR CHECK LEDs light whenever the instrument is turned on or when (2-22 GHz) is pushed. The main processor then performs a check of itself, a checksum verification of all ROMs on the Al5 Controller, a partial check of the Instrument Bus (50-wire bus), and a read-write check of the RAMs and A3A4 Memory in the IF-Display Section.

If all the checks pass, both INSTR CHECK LEDs turn off.

If any check fails, one or both INSTR CHECK LEDs remain on.

- Both INSTR CHECK LEDs on indicates a problem with the Al5 Controller. First, remove the Controller and make sure that the 50-wire ribbon cable and HP-IB ribbon cable are pressed all the way onto A15J1 and A15J2 connectors. Reinstall the Al5 Controller. If both front panel INSTR CHECK LEDs still remain on when the instrument is turned on, follow procedure under Al5 Controller Self Test.
- Left LED (INSTR CHECK I) on indicates a failure occurred when checking the Digital Storage Memory (A3A4). First, check to ensure that a LINE power cord is connected to the IF-Display Section. Also check to see that the rear-panel Analyzer Bus Interconnect Cable, W31, is properly connected. If INSTR CHECK I still remains on when the instrument is turned on, troubleshoot the A3 Digital Storage in the IF-Display Section.
- Right LED (INSTR CHECK II) on indicates a failure occurred during the partial check of the Instrument Bus.

Note



The partial interface check reads the key column lines (KC0 through KC7) from the Al and A5 front panels. If any front panel key is shorted or stuck closed, INSTR CHECK II LED should remain on after the Self Test is completed. This part of the Self Test can easily be verified by pushing any key, except (LCL), and holding the key in while pushing (2-22 GHz). If the I/O interface check routine is working, INSTR CHECK II LED will stay on.

- Suspected digital failure but no INSTR CHECK LEDs on may indicate a RAM or I/O bus failure which is not checked in the normal Self Check or "POP" (Power-On Preset). If the two front panel INSTR CHECK LEDs turn on when the LINE switch is set to ON, and turn off again within a few seconds (indicating no digital problems), but symptoms persist (such as improper CRT display or improper response to particular commands) indicating that the problem is in the digital area, a "LONG POP" can be performed.

"LONG POP" Instrument Preset Check

This check is very similar to the normal Instrument Preset Check: an additional processor check is performed, all of the RAM locations in Digital Storage (A3A4 Memory) are checked, and the RAM memory on the Al5 Controller is verified.

Since these more extensive checks require altering information that has been stored in RAM, LONG POP requires an internal jumper on the Al5 Controller. To perform a LONG POP:

- Set the LINE switch to STANDBY.
- Place a jumper between ST or STS to T3
  - On Al5 Controller (HP part number 85660-60209) jumper A15TP4 (STS) to A15TP1-7 (T3).
  - On Al5 Controller (HP part number 85660-60245) jumper A15TP1-9 (ST) to A15TP1-8 (T3).
  - (Refer to Al5 Controller Component Location Diagrams for location of test points).
- Set the LINE switch to ON.

When LINE switch is set to ON, the two red INSTR CHECK LEDs are forced on and the main processor steps through the Self Test routine, expanding the normal POP with the additional tests mentioned above. The expected results for a LONG POP are exactly the same as for the normal POP of Instrument Preset as described above in the Instrument Preset Check.

Because LONG POP is a "destructive test" (it alters any information that has been stored in RAM), it should be performed only as a last resort effort in troubleshooting what appears to be a memory or processor related problem.

Digital Storage Verification

The Instrument Preset Check does a fairly complete verification of the Digital Storage controller and memory. An additional check can be done, independent of the RF section, by jumpering A3A6TP3 to A3A6TP6 and pushing A3A7S1 momentarily. A test pattern should appear on the display. Refer to the A3 Digital Storage Troubleshooting Section in the HP 856628 IF-Display Section volume of the service manual for a more detailed description of this procedure. Note that when the jumper is connected, the left check LED always stays on following an INSTR PRESET, since in the test pattern mode, Digital Storage ignores all instructions from the Al5 Controller.

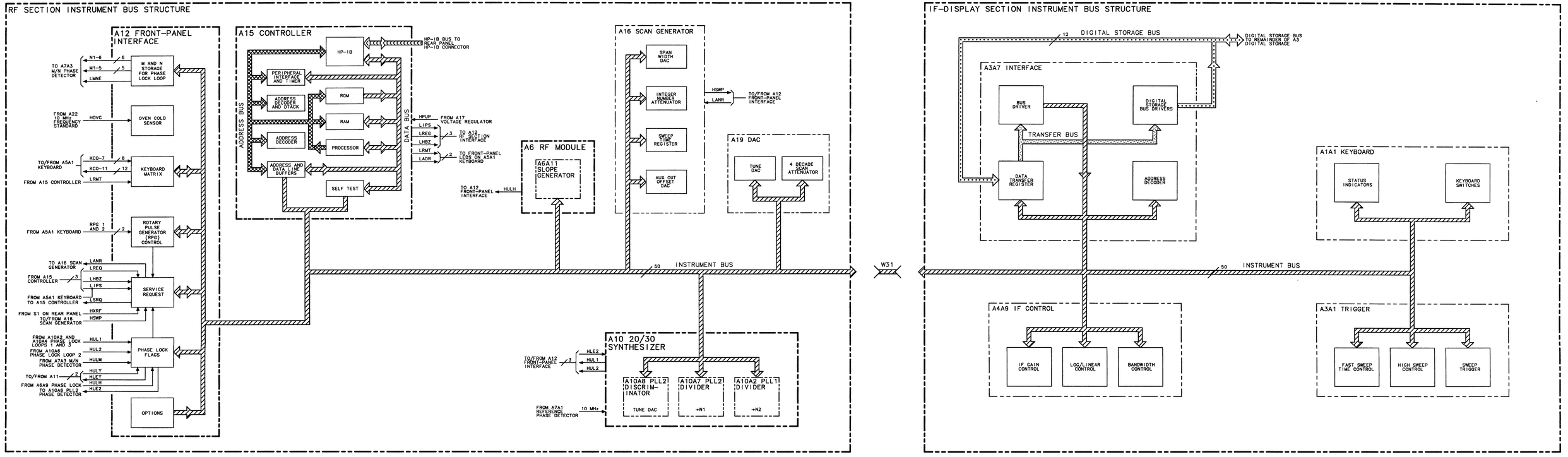
RF SECTION INSTRUMENT BUS STRUCTURE
A12 FRONT-PANEL INTERFACE
A15 CONTROLLER
A16 SCAN GENERATOR
A6 RF MODULE
A19 DAC
A10 20/30 SYNTHESIZER
INSTRUMENT BUS
50
W31
IF-DISPLAY SECTION INSTRUMENT BUS STRUCTURE
DIGITAL STORAGE BUS
A3A7 INTERFACE
TRANSFER BUS
A1A1 KEYBOARD
A4A9 IF CONTROL
A3A1 TRIGGER
RF DIGITAL TROUBLESHOOTING, BLOCK DIAGRAM

A5

A5 Front Panel, Circuit Description

The A5 Front Panel comprises the A5A1 Keyboard, A5A2 Rotary Pulse Generator (RPG), Instrument Check indicator LEDs, LINE power switch, STANDBY power indicator LED, and CAL OUTPUT connector and cable. The RF INPUT, 1ST LO OUTPUT, and 321.4 MHz IF INPUT and IF OUTPUT connectors are physically part of the A6 RF Module and are described in detail in that section.

A5A1 Keyboard

A5A1 Keyboard includes the 49 pushbutton switches and 9 associated indicator LEDs on the RF Section front panel.

Keyboard Switches Ⓐ

Each of the normally open SPST switches consists of a spring-loaded contact and a pair of printed-circuit board contacts. All but two of the keyboard switches are organized in a matrix of rows and columns. When a front-panel key is pressed, the corresponding SPST switch is closed, connecting a normally grounded key row to a key column. The grounded key column signal is detected on the Al2 Front Panel Interface, signalling the Al5 Controller to immediately halt the sweep. Then, the Al5 Controller polls (grounds) each of the key rows sequentially (starting with key row 0) to identify the particular front panel key that is pressed. During normal operation, the front-panel SWEEP LED can be observed to blink off momentarily as the Al5 Controller halts the sweep, polls both the IF Section keyboard and the RF Section keyboard, and then reacquires phaselock before continuing on with the sweep.

Indicator LEDs Ⓑ

The nine keyboard indicator LEDs and the two INSTR CHECK indicator LEDs are lighted selectively by the Al5 Controller to indicate the state of coupled functions, SIGNAL TRACK (on/off), DATA entry (enabled/disabled), HP-IB control status (remote and addressed), and self-test. U2 and U3 latch the LED data from the Data Bus. All front-panel LEDs are lighted momentarily during the turn-on self test for verification.

The two INSTR CHECK indicator LEDs are lighted selectively by the Al5 Controller to indicate the overall results of the most recent instrument self test. An instrument self test is performed each time the LINE switch is switched to ON or the [INSTR PRESET] key is pressed. Both LEDs are lighted at the start of each self test, and both are turned off upon successful test completion; if one or both of the INSTR CHECK LEDs remain on, an instrument fault has been detected. Refer to the Al5 Controller section for detailed information about the self test.

A5A2 Rotary Pulse Generator Ⓓ

A5A2 Rotary Pulse Generator (RPG) is operated by turning the front-panel DATA knob in either direction. The rate and direction of knob rotation are encoded in the number and relative phase of output pulses on the RPG1 and RPG2 lines. These two signals are decoded on the Al2 Front Panel Interface, enabling the Al5 Controller to gradually change appropriate instrument settings.

LINE Power Switch Ⓒ

When the LINE switch is in STANDBY, the LSBY (Low=STANDBY) line is grounded. If the RF Section is connected to an ac power source, the +22 V dc supply lights the STANDBY LED, holds the A23K1 Fan Relay in the off state, and powers the heater circuit of the A22A2 10 MHz Quartz Crystal Oscillator; all other power supplies are turned off. When the LINE switch is switched ON, the A23K1 Fan relay is released to the on state (switching on the fan) and LSBY rises to about +22 V dc (due to the Fan Relay coil). This enables the +20 V dc supply on the Al7 Positive Regulator, which causes all the power supplies to turn on.

Front Panel Removal and Repair

With ac line cords removed, proceed as follows.

1. Remove interconnecting cables between instruments.
2. Position instrument on right side as shown in view A of Figure 1.
3. Remove feet ① from rear of RF Section by removing screws ② shown in view A of Figure 1.
4. Loosen bottom cover screw ③ and remove cover.
5. Loosen thumbscrews ④ and separate instruments by holding IF-Display Section in place while pushing the RF Section at the front panel.
6. After separating instruments, slide RF Section away from IF Display Section far enough to remove screws ⑤ holding front panel to frame. Refer to view B of Figure 1.
7. Remove screws ⑤ from other side of instrument. Refer to view C of Figure 1.
8. Pull front panel out of frame as shown in view D of Figure 1.
9. Disconnect cable ⑥ from connector ⑦. Disconnect cable ⑧ from connector ⑨. Refer to view D of Figure 1.
10. To replace INSTR CHECK and STANDBY LEDs proceed as follows.
    a. Unsolder the wires from the LED leads and push on the leads with a soldering aid to force the LED out of the socket and through the front panel.
    b. Insert a new LED and resolder as shown in Figure 2.
    c. Trim excess lead length.

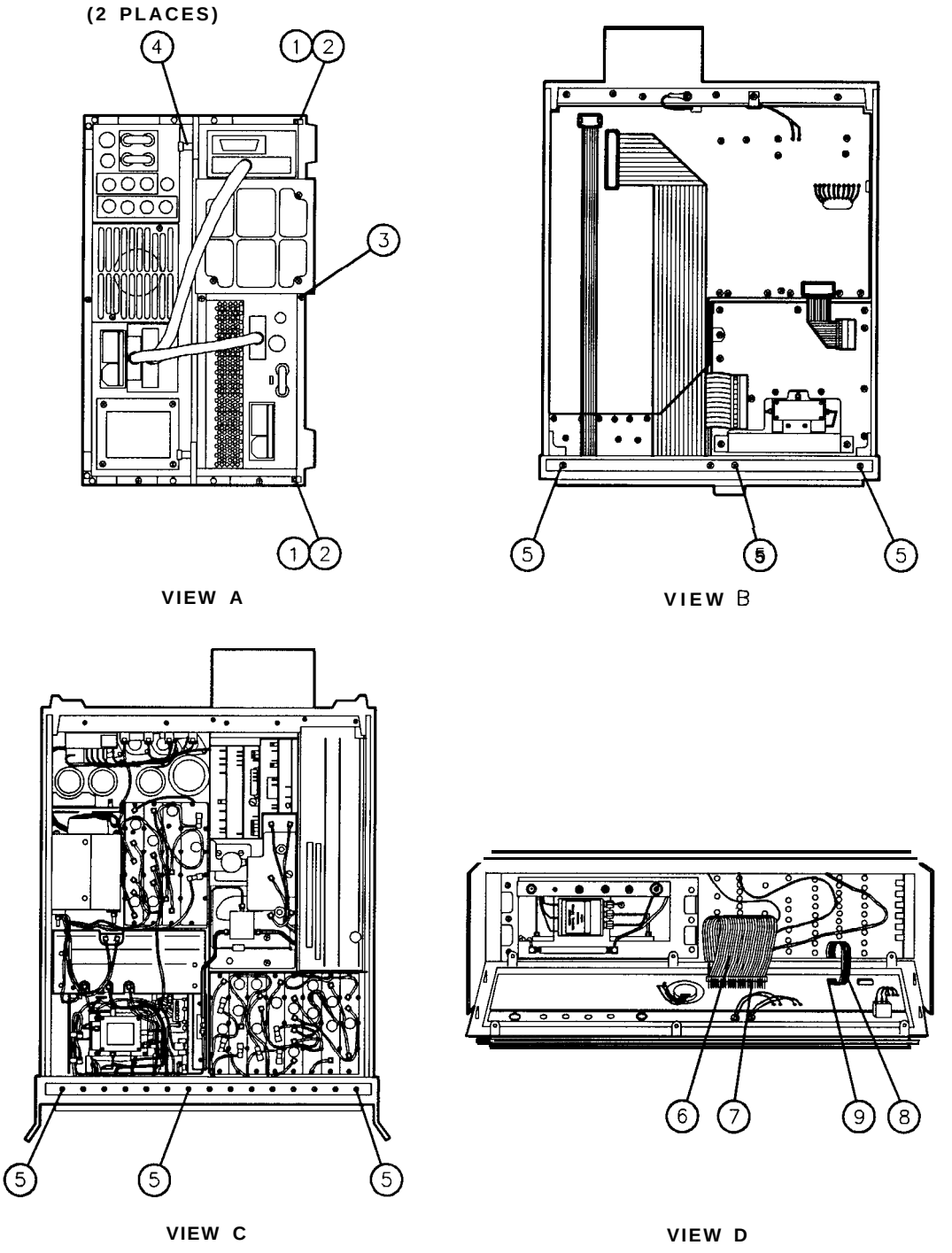

Figure 1. Front Panel Removal and Repair

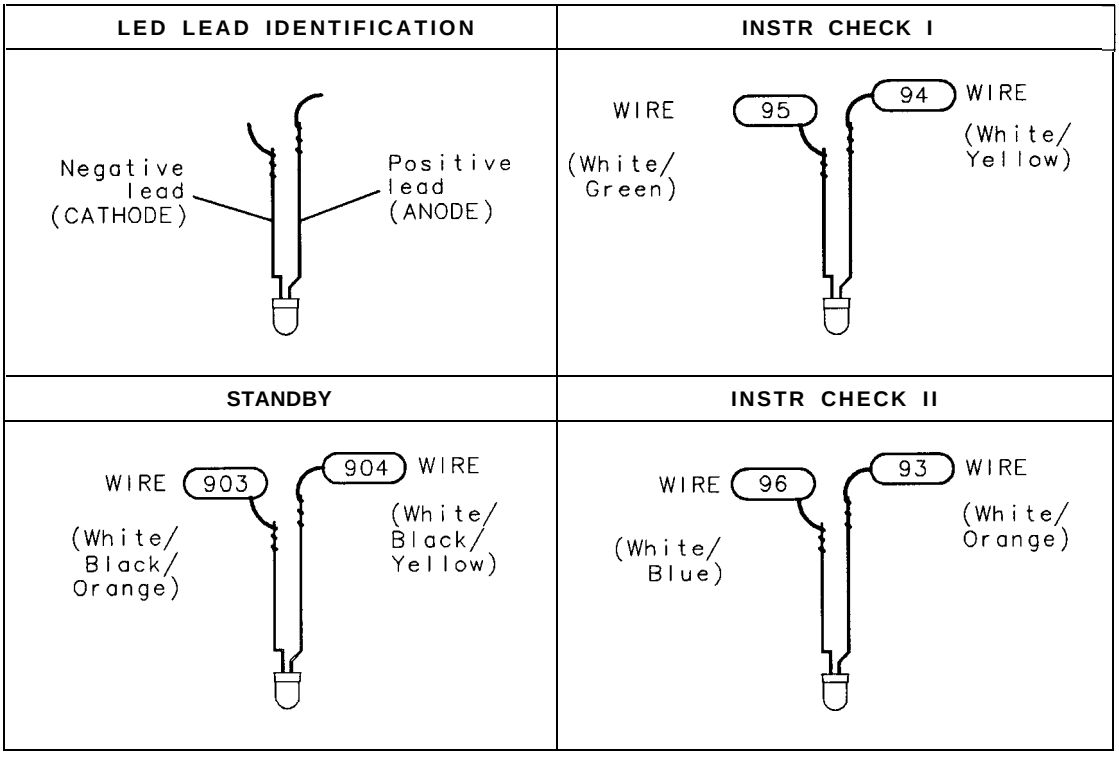

Figure 2. LED Removal and Repair

11. To replace signal input LEDs, switches, or keys, proceed as follows.
    a. Loosen set screw in DATA control knob (RPG) ⑩ using a number 4 allen wrench (HP part number 8710-0857) and remove knob. Refer to Figure 3.
    b. Remove nut from DATA control using a 7/16 inch wrench.
    c. Remove 14 screws ⑪ and lift printed circuit board away from front panel. Refer to Figure 3.
    d. Pull defective LED out of socket with fingers (it may be necessary to pry slightly with a pointed instrument such as a soldering aid), trim both leads on new LED to 3/8 inch (1 cm) and insert the new LED in the socket with negative (cathode) lead to the square pad on the printed circuit board. Refer to LED lead identification below.
    e. To remove the defective switch, remove the key from the switch, melt the plastic pins holding the switch to the printed circuit board using a soldering iron, and remove the switch from printed circuit board.
    f. To replace the switch, insert the plastic pins of the new switch through the printed circuit board and melt the pins with a soldering iron on the rear side of the printed circuit board enough to secure the switch. Replace the key.
    g. Reassemble the printed circuit board to the front panel and connect cables.
12. Reconnect the connectors removed in step 9.
13. Secure the front panel to the RF section by tightening six screws ⑤. Refer to views B and C of Figure 1.

14. Secure IF Display Section to RF Section, replace bottom cover, and reconnect ac line cords.

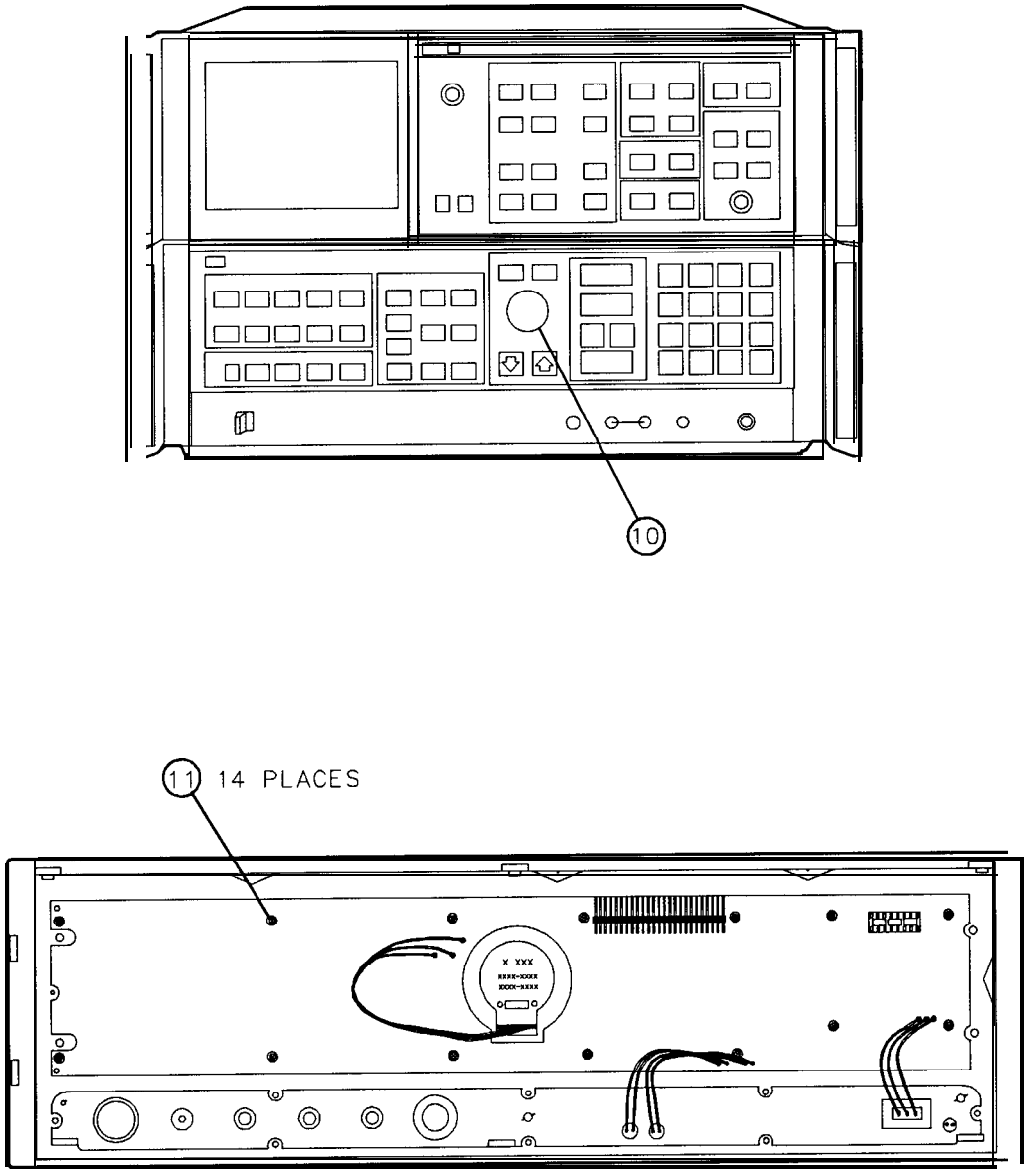

Figure 3. Keyboard Removal and Repair

HP Part Number 85660-60232

A5 Front-Panel

Reference Designation	HP Part Number	C D	Qty	Description	Mfr Code	Mfr Part Number
A5	85660-60232	8	1	FRONT PANEL ASSEMBLY (SERIAL PREFIXES: 2410A-2511A) (NOT AVAILABLE FOR FIELD REPLACEMENT)	28480	85660-60232
A5A1	35660-60210	2	1	KEYBOARD ASSEMBLY	28480	85660-60210
A5A2	5060-0329	9	1	ROTARY PULSE GENERATOR (SERIAL PREFIXES: 2410A-2430A)	28480	5060-0329
A5A2	3960-0684	2	1	ROTARY PULSE GENERATOR (SERIAL PREFIXES: 2449A AND ABOVE)	28480	0960-0684
A5A2DS1	2140-0016	a	1	LAMP, RPG (SERIAL PREFIXES: 2410A-2430A)	28480	2140-0016
A5DS1	1990-0487	7	1	LED-LAMP LUM-INT=2MCD BVR=5V	28480	HLMP-1401
A5DS2	1990-0486	6	1	LED-LAMP LUM-INT=2MCD IF=25MA-MAX BVR=5V	28480	HLMP-1301
A5DS3	1990-0486	6	1	LED-LAMP LUM-INT=2MCD IF=25MA-MAX BVR=5V	28480	HLMP-1301
A5MP1	1370-3069	2	1	RPG TUNING KNOB	28480	0370-3069
A5MP2	1510-1148	2	1	RETAINER-PUSH-ON KB-TO-SHFT EXT		669
A5MP3	0624-0264	2	1	SCREW-TPG 4-40 .312-IN-LG 82 DEG	45722	
A5MP4	2190-0016	3	1	WASHER-LK INTL T 3/8 IN .377-IN-ID	78189	1920-02
A5MP5	2200-0105	4	1	SCREW-MACH 4-40 .312-IN-LG PAN-HD-POZI	77250	
A5MP6	2950-0043	8	1	NUT-HEX-DBL-CHAM 3/B-32-THD .094-IN-THK	73743	28200-10-101
A5MP7	35660-00056	a	1	LOWER SUB PANEL	28480	85660-00056
A5MP8	35660-00058	0	1	LOWER SUB PANEL DRESS	28480	85660-00058
A5MP9	35680-00011	9	1	KEYBOARD SUB PANEL	28480	85680-00011
A5MP10	35660-00071	7	1	KEYBOARD SUB PANEL DRESS	28480	85660-00071
A5MP12	15680-40004	4	3	LED MOUNT	28480	85680-40004
A5MP13	0890-0706	0	1	TUBING-HS .093-IN-D/.046-IN-RCVD	06090	VERSAFIT-3/32-BLK
A5MP14	0362-0227	1	1	CONNECTOR-SGL CONT SKT 1.14-MM-BSC-SZ	27264	02-05-5216
A5MP15	.400-0249	0	1	CABLE TIE .062-.625-DIA .091-WD NYL	59730	TY-23M-8
A5S1	1101-2193	5	1	SWITCH-TGL PRI-SW SPDT 2A 250VAC SLDR-LU	09353	U11J60ZG W/7868-14 W/5310

**Indicates factory-selected value*

HP Part Number 85660-60258

A5 Front Panel

Reference Designatior	HP Part Number	C. D	Qty	Description	Mfr Code	Mfr Part Number
A5	85660-60258	8	1	FRONT PANEL ASSEMBLY (SERIAL PREFIX: 2516A)(NOT AVAILABLE FOR FIELD REPLACEMENT)	28480	85660-60258
A5A1	85660-60210	2	1	KEYBOARD ASSEMBLY	28480	85660-60210
A5A2	0960-0684	i	1	ROTARY PULSE GENERATOR INPUT POWER: 5VDC	28480	QEDS-8831
A5DS1	1990-0487	7	1	LED-LAMP LUM-INT=2MCD BVR=5V	28480	HLMP-1401
A5DS2	1990-0486	6	1	LED-LAMP LUM-INT=2MCD IF=25MA-MAX BVR=5V	28480	HLMP-1301
A5DS3	1990-0486	6	1	LED-LAMP LUM-INT=2MCD IF=25MA-MAX BVR=5V	28480	HLMP-1301
A5MP1	0370-3069	2	1	RPG TUNING KNOB	28480	0370-3069
A5MP2	0510-1148	2	1	RETAINER-PUSH-ON KB-TO-SHFT EXT		669
A5MP3	0624-0264	2	1	SCREW-TPG 4-40 .312-IN-LG 82 DEG	45722	
A5MP4	2190-0016	3	1	WASHER-LK INTL T 3/8 IN .377-IN-ID	78189	1920-02
A5MP5	2200-0105	4	1	SCREW-MACH 4-40 .312-IN-LG PAN-HD-POZI	77250	
A5MP6	2950-0043	8	1	NUT-HEX-DBL-CHAM 3/8-32-THD .094-IN-THK	73743	28200-10-101
A5MP7	85660-00056	8	1	LOWER SUB PANEL	28480	85660-00056
A5MP8	85660-00112	7	1	LOWER SUB PANEL DRESS	28480	85660-00112
A5MP9	85680-00011	9	1	SUB PANEL KEY BOARD	28480	85680-00011
A5MP10	85660-00113	8	1	KEYBOARD PANEL DRESS	28480	85660-00113
A5MP11	5021-8699	C	1	KEYBOARD BEZEL	28480	5021-8699
A5MP12	85680-40004	4	3	LED MOUNT	28480	85680-40004
A5MP13	0890-1186	2	1	TUBING-HS .125-IN-D/.062-IN-RCVD	06090	VERSAFIT-l/B CLEAR
A5MP14	0362-0227	1	1	CONNECTOR-SGL CONT SKT 1.14-MM-BSC-SZ	27264	02-05-5216
A5MP15	1400-0249	a	1	CABLE TIE .062-.625-DIA .091-WD NYL	59730	TY-23M-8
A5S1	3101-2193	5	1	SWITCH-TGL PRI-SW SPDT 2A 250VAC SLDR-LU	09353	U11J60ZG W/7868-14 W/531(

**Indicates facto y-selected value*

HP Part Number 85660-60210

A5A1 Keyboard

Reference Designatior	HP Part Number	CD	Qty	Description	Mfr Code	Mfr Par! Number
A5A1	85660-60210		1	KEYBOARD BOARD ASSEMBLY	2848C	85660-60210
A5A1C1	0160-2055		1	CAPACITOR-FXD .01UF +80-20% 100VDC CER		805-504 Y5V 103Z
A5A1C2	0160-4832		1	CAPACITOR-FXD .01UF +-10% 100VDC CER	04222	SA101C103KAAH
A5A1DS1	1990-0487		1	LED-LAMP LUM-INT=2MCD BVR=5V	28480	HLMP-1401
A5A1DS2	1990-0487		1	LED-LAMP LUM-INT=2MCD BVR=5V	28480	HLMP-1401
A5A1DS3	1990-0487		1	LED-LAMP LUM-INT=2MCD BVR=5V	28480	HLMP-1401
A5A1DS4	1990-0487		1	LEO-LAMP LUM-INT=2MCD BVR=5V	28480	HLMP-1401
A5A1DS5	1990-0487		1	LED-LAMP LUM-INT=2MCD BVR=5V	28480	HLMP-1401
A5A1DS6	1990-0487		1	LED-LAMP LUM-INT=2MCD BVR=5V	28480	HLMP-1401
A5A1DS7	1990-0487		1	LED-LAMP LUM-INT=2MCD BVR=5V	28480	HLMP-1401
A5A1DS8	1990-0487		1	LED-LAMP LUM-INT=2MCD BVR=5V	28480	HLMP-1401
A5A1DS9	1990-0487		1	LED-LAMP LUM-INT=2MCD BVR=5V	28480	HLMP-1401
A5A1E1	1251-0600		1	CONNECTOR-SGL CONT PIN 1.14-MM-BSC-SZ SQ	27264	16-06-0034
A5A1E2	1251-0600		1	CONNECTOR-SGL CONT PIN 1.14-MM-BSC-SZ SQ	27264	16-06-0034
A5A1E3	1251-0600		1	CONNECTOR-SGL CONT PIN 1.14-MM-BSC-SZ SQ	27264	16-06-0034
A5A1E4	1251-0600		1	CONNECTOR-SGL CONT PIN 1.14-MM-BSC-SZ SQ	27264	16-06-0034
A5A1E5	1251-0600		1	CONNECTOR-SGL CONT PIN 1.14-MM-BSC-SZ SQ	27264	16-06-0034
A5A1E6	1251-0600		1	CONNECTOR-SGL CONT PIN 1.14-MM-BSC-SZ SQ	27264	16-06-0034
A5A1E7	1251-0600		1	CONNECTOR-SGL CDNT PIN 1.14-MM-BSC-SZ SC	27264	16-06-0034
A5A1E8	1251-0600		1	CONNECTOR-SGL CDNT PIN 1.14-MM-BSC-SZ SC	27264	16-06-0034
A5A1E9	1251-0600		1	CONNECTOR-SGL CDNT PIN 1.14-MM-BSC-SZ SC	27264	16-06-0034
A5A1E10	1251-0600		1	CONNECTOR-SGL CDNT PIN 1.14-MM-BSC-SZ SC	27264	16-06-0034
A5A1E11	1251-0600		1	CONNECTOR-SGL CONT PIN 1.14-MM-BSC-SZ SQ	27264	16-06-0034
A5A1J1	1200-1205		1	SOCKET-IC 16-CONT DIP DIP-SLDR	00779	2-641610-z
A5A1MP1				NOT ASSIGNED		
A5A1MP3	5041-3929		1	LED STAND OFF	28480	5041-3929
A5A1MP4	5041-3929		1	LED STAND OFF	28480	5041-3929
A5A1MP5	5041-3929		1	LED STAND OFF	28480	5041-3929
A5A1MP6	5041-3929		1	LED STAND OFF	28480	5041-3929
A5A1MP7	5041-3929		1	LED STAND OFF	28480	5041-3929
A5A1MP8	5041-3929		1	LED STAND OFF	28480	5041-3929
A5A1MP9	5041-3929		1	LED STAND OFF	28480	5041-3929
A5A1MP10	5041-3929		1	LED STAND OFF	28480	5041-3929
A5A1MP11	5041-3929		1	LED STAND OFF	28480	5041-3929
A5A1P1	1251-5549		1	CONN-POST TYPE .100-PIN-SPCG 50-CONT	18873	68025-650
A5A1Q1	1854-0477		1	TRANSISTOR NPN 2N2222A SI TO-18 PD=500MW	04713	2N2222A
A5A1R1	3757-0438		1	RESISTOR 5.11K +-1% .125W TF TC=O+-100	19701	SFR25H
A5A1R2	3698-3152		1	RESISTOR 3.48K 1% .125W TF TC=O+-100	19701	SFR25H
A5A1R3	0698-3150		1	RESISTOR 2.37K 1% .125W TF TC=O+-100	19701	SFR25H
A5A1R4	3698-7242		1	RESISTOR 1.78K +-1% .05W TF TC=O+-100	19701	50635
A5A1S1	5060-9436		1	SWITCH-PB SPST-NO MOM	71468	5560-9436
A5A1S2	5060-9436		1	SWITCH-PB SPST-NO MOM	71468	5560-9436
A5A1S3	5060-9436		1	SWITCH-PB SPST-NO MOM	71468	5560-9436
A5A1S4	5060-9436		1	SWITCH-PB SPST-NO MOM	71468	5560-9436
A5A1S5	5060-9436		1	SWITCH-PB SPST-NO MOM	71468	5560-9436
A5A1S6	5060-9436		1	SWITCH-PB SPST-NO MOM	71468	5560-9436
A5A1S7	5060-9436		1	SWITCH-PB SPST-NO MOM	71468	5560-9436

**Indicates factory-selected value*

HP Part Number 85660-60210

A5A1 Keyboard

Reference Designation	HP Part Number	C D	Qty	Description	Mfr Code	Mfr Part Number
A5A1S8	5060-9436	7	1	SWITCH-PB SPST-NO MOM	71468	5560-9436
A5A1S9	5060-9436	7	1	SWITCH-P8 SPST-NO MOM	71468	5560-9436
A5A1S10	5060-9436	7	1	SWITCH-P8 SPST-ND MOM	71468	5560-9436
A5A1S11	5060-9436	7	1	SWITCH-PB SPST-NO MOM	71468	5560-9436
A5A1S12	5060-9436	7	1	SWITCH-PB SPST-ND MOM	71468	5560-9436
A5A1S13	5060-9436	7	1	SWITCH-PB SPST-NO MOM	71468	5560-9436
A5A1S14	5060-9436	7	1	SWITCH-PB SPST-NO MOM	71468	5560-9436
A5A1S15	5060-9436	7	1	SWITCH-PB SPST-NO MOM	71468	5560-9436
A5A1S16	5060-9436	7	1	SWITCH-P8 SPST-NO MOM	71468	5560-9436
A5A1S17	5060-9436	7	1	SWITCH-PB SPST-NO MOM	71468	5560-9436
A5A1S18	5060-9436	7	1	SWITCH-PB SPST-NO MOM	71468	5560-9436
A5A1S19	5060-9436	7	1	SWITCH-PB SPST-NO MOM	71468	5560-9436
A5A1S20	5060-9436	7	1	SWITCH-PB SPST-NO MOM	71468	5560-9436
A5A1S21	5060-9436	7	1	SWITCH-PB SPST-NO MOM	71468	5560-9436
A5A1S22	5060-9436	7	1	SWITCH-PB SPST-NO MOM	71468	5560-9436
A5A1S23	5060-9436	7	1	SWITCH-PB SPST-NO MOM	71468	5560-9436
A5A1S24	5060-9436	7	1	SWITCH-PB SPST-NO MOM	71468	5560-9436
A5A1S25	5060-9436	7	1	SWITCH-PB SPST-NO MOM	71468	5560-9436
A5A1S26	5060-9436	7	1	SWITCH-PB SPST-NO MOM	71468	5560-9436
A5A1S27	5060-9436	7	1	SWITCH-PB SPST-NO MOM	71468	5560-9436
A5A1S28	5060-9436	7	1	SWITCH-PB SPST-NO MOM	71468	5560-9436
A5A1S29	5060-9436	7	1	SWITCH-PB SPST-ND MOM	71468	5560-9436
A5A1S30	5060-9436	7	1	SWITCH-P8 SPST-ND MOM	71468	5560-9436
A5A1S31	5060-9436	7	1	SWITCH-PB SPST-NO MOM	71468	5560-9436
A5A1S32	5060-9436	7	1	SWITCH-PB SPST-NO MOM	71468	5560-9436
A5A1S33	5060-9436	7	1	SWITCH-PB SPST-ND MOM	71468	5560-9436
A5A1S34	5060-9436	7	1	SWITCH-PB SPST-NO MOM	71468	5560-9436
A5A1S35	5060-9436	7	1	SWITCH-PB SPST-NO MOM	71468	5560-9436
A5A1S36	5060-9436	7	1	SWITCH-PB SPST-NO MOM	71468	5560-9436
A5A1S37	5060-9436	7	1	SWITCH-PB SPST-NO MOM	71468	5560-9436
A5A1S38	5060-9436	7	1	SWITCH-PB SPST-NO MOM	71468	5560-9436
A5A1S39	5060-9436	7	1	SWITCH-PB SPST-NO MOM	71468	5560-9436
A5A1S40	5060-9436	7	1	SWITCH-PB SPST-NO MOM	71468	5560-9436
A5A1S41	5060-9436	7	1	SWITCH-PB SPST-ND MOM	71468	5560-9436
A5A1S42	5060-9436	7	1	SWITCH-PB SPST-NO MOM	71468	5560-9436
A5A1S43	5060-9436	7	1	SWITCH-PB SPST-NO MOM	71468	5560-9436
A5A1S44	5060-9436	7	1	SWITCH-PB SPST-ND MOM	71468	5560-9436
A5A1S45	5060-9436	7	1	SWITCH-PB SPST-NO MOM	71468	5560-9436
A5A1S46	5060-9436	7	1	SWITCH-PB SPST-NO MOM	71468	5560-9436
A5A1S47	5060-9436	7	1	SWITCH-PB SPST-NO MOM	71468	5560-9436
A5A1S48	5060-9436	7	1	SWITCH-PB SPST-NO MOM	71468	5560-9436
A5A1S49	5060-9436	7	1	SWITCH-PB SPST-NO MOM	71468	5560-9436
A5A1U1	1810-0229	5	1	NETWORK-RES B-SIP 330.0 OHM X 7	11236	750-81
A5A1U2	1820-1196	8	1	IC FF TTL LS D-TYPE POS-EDGE-TRIG CDM CL	01295	SN74LS174N
A5A1U3	1820-1196	8	1	IC FF TTL LS D-TYPE PDS-EDGE-TRIG COM CL	01295	SN74LS174N
A5A1U4	1810-0229	5	1	NETWORK-RES 8-SIP 330.0 OHM X 7	11236	750-81
A5A1W1	0757-0346	2	1	RESISTOR 10 +-1% .125W TF TC=O+-100	91637	CMF-55-1, T-l
A5A1W2	0757-0346	2	1	RESISTOR 10 +-1% .125W TF TC=O+-100	91637	CMF-55-1, T-l

**Indicates factory-selected value*

HP Part Number 85660-60210

A5A1 Keyboard

Reference Designation	HP Part Number	C D	Qty	Description	Mfr Code	Mfr Part Number
A5A1W3	)757-0346	2	1	RESISTOR 10 +-1% .125W TF TC=O+-100	91637	CMF-55-l. T-l

**Indicates factory-selected value*

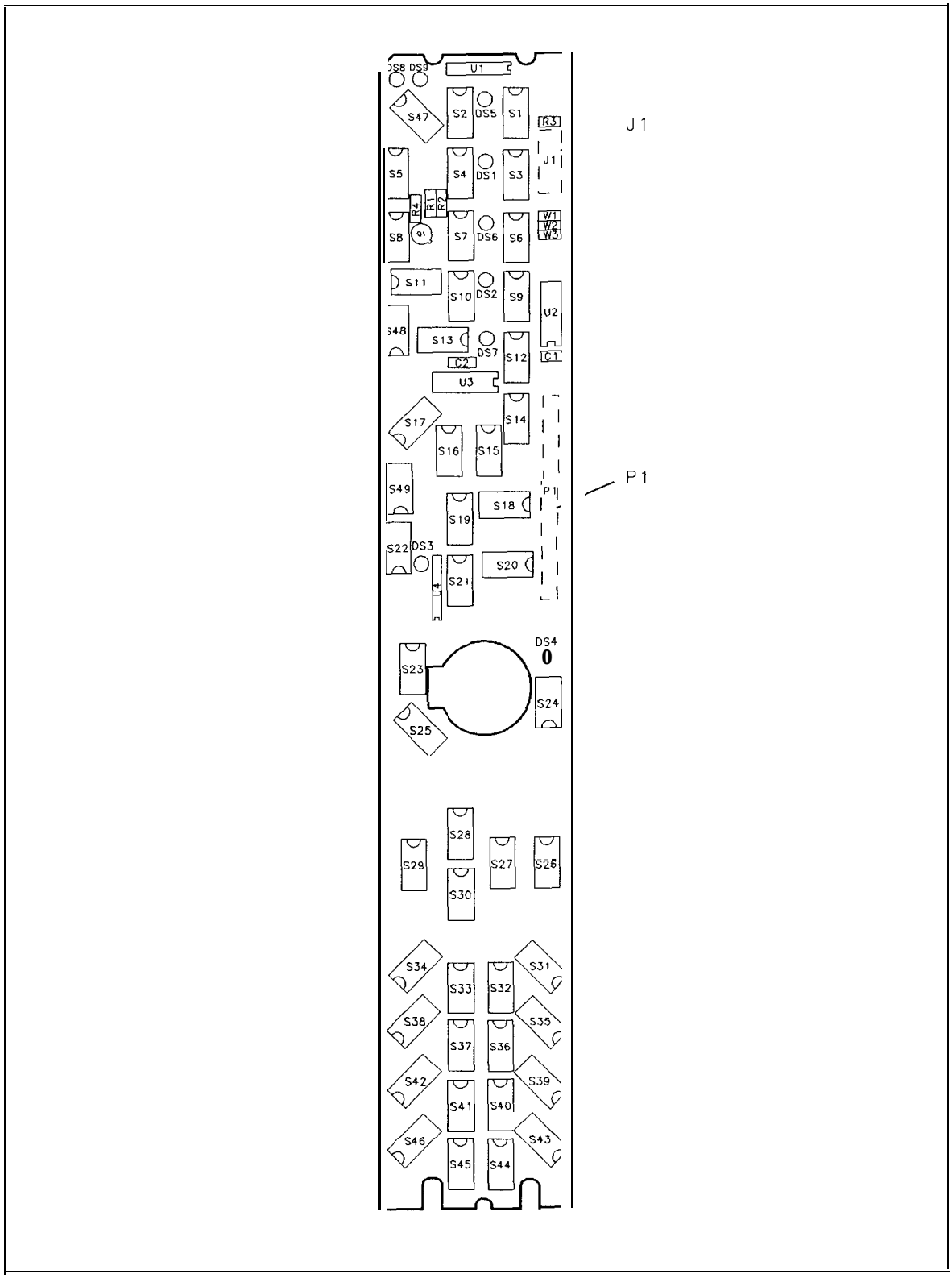

A5A1 Keyboard Component Locations, 85660-60210

A5 FRONT PANEL
85660-60232
(SERIAL PREFIXES: 2410A-2511A)

85660-60258
(SERIAL PREFIX: 2516A)

A5A1 KEYBOARD
85660-60210

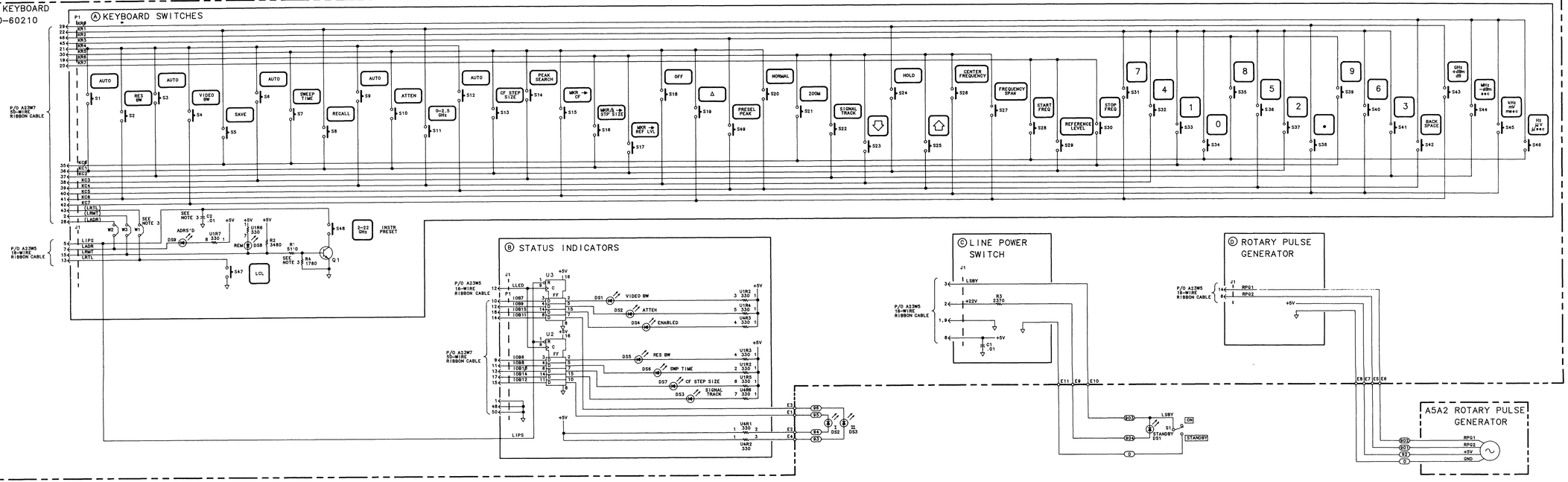

NOTES:

1. REFERENCE DESIGNATORS WITHIN THIS ASSEMBLY ARE ABBREVIATED. FOR COMPLETE REFERENCE DESIGNATION, PREFIX ABBREVIATION WITH ASSEMBLY DESIGNATION.
2. UNLESS OTHERWISE INDICATED: RESISTANCE IS IN OHMS (Ω) CAPACITANCE IS IN MICROFARADS (µF) INDUCTANCE IS IN MICROHENRIES (µH)
3. C2, R4, W1, W2, W3 ARE NOT LOADED ON 85660-60215 VERSION USED IN 85660A.
4. U4 PIN CONFIGURATION:

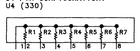

5. MNEMONIC TABLE:

MNEMONIC	DESCRIPTION
ADR0–ADR4	ADDRESS BITS 0 THRU 4
ADRS'D	HP-IB ADDRESS ACTIVE
IOB0–IOB15	INSTRUMENT BUS DATA BITS 0–15
HSWP	HIGH=SWEEPING
KC0–KC7	KEY COLUMNS 0–7
KR0–KR11	KEY ROWS 0–11
LADR	LOW=ADDRESS LED ON
LBIO	LOW=RF SECTION I/O STROBE
LIPS	LOW=INSTRUMENT PRESET
LLED	LOW=LED STROBE
LRTL	LOW=LOCAL BUTTON PUSHED
LRMT	LOW=REMOTE
LSBY	LOW=STANDBY
LTIO	LOW=DISPLAY SECTION IO
REM	HP-IB REMOTE ENABLED
RPG1	ROTARY PULSE GENERATOR
RPG2	ROTARY PULSE GENERATOR

A5

A5 FRONT PANEL, SCHEMATIC DIAGRAM

A6

A6 RF Module Replacement

Note For location of hardware and cables referred to in this procedure, see Figure **1.**

Removal

1. Remove ac line cords, separate instrument sections, and remove top, bottom, and right side covers from RF Section.
2. Remove RF front panel. (See A5 Front Panel Removal procedure in A5 Front Panel section.)
3. Remove two clips ① by removing four screws ②.
4. Remove five cables ③ from A6 PC boards.
5. Remove A6 RF Module PC cover plate by removing six screws ④.
6. Disconnect coaxial cable ⑤ at point shown.
7. Disconnect two ribbon cables ⑥ from motherboard.
8. Remove five screws ⑦.
9. Slide the RF Module out from the mainframe.

Installation

10. Slide the RF Module into the mainframe; push coaxial cable ⑤ in slightly so that it does not get caught on the mainframe.
11. Replace five screws ⑦.
12. Reconnect two ribbon cables ⑥ to motherboard.
13. Reconnect coaxial cable ⑤.
14. Replace A6 RF Module PC cover plate by replacing six screws ④.
15. Replace five cables ③ to A6 PC boards.
16. Replace two clips ① by replacing four screws ②.
17. Replace front panel.
18. Replace top, bottom, and side covers, reconnect IF and RF Sections, and reconnect ac line cords.

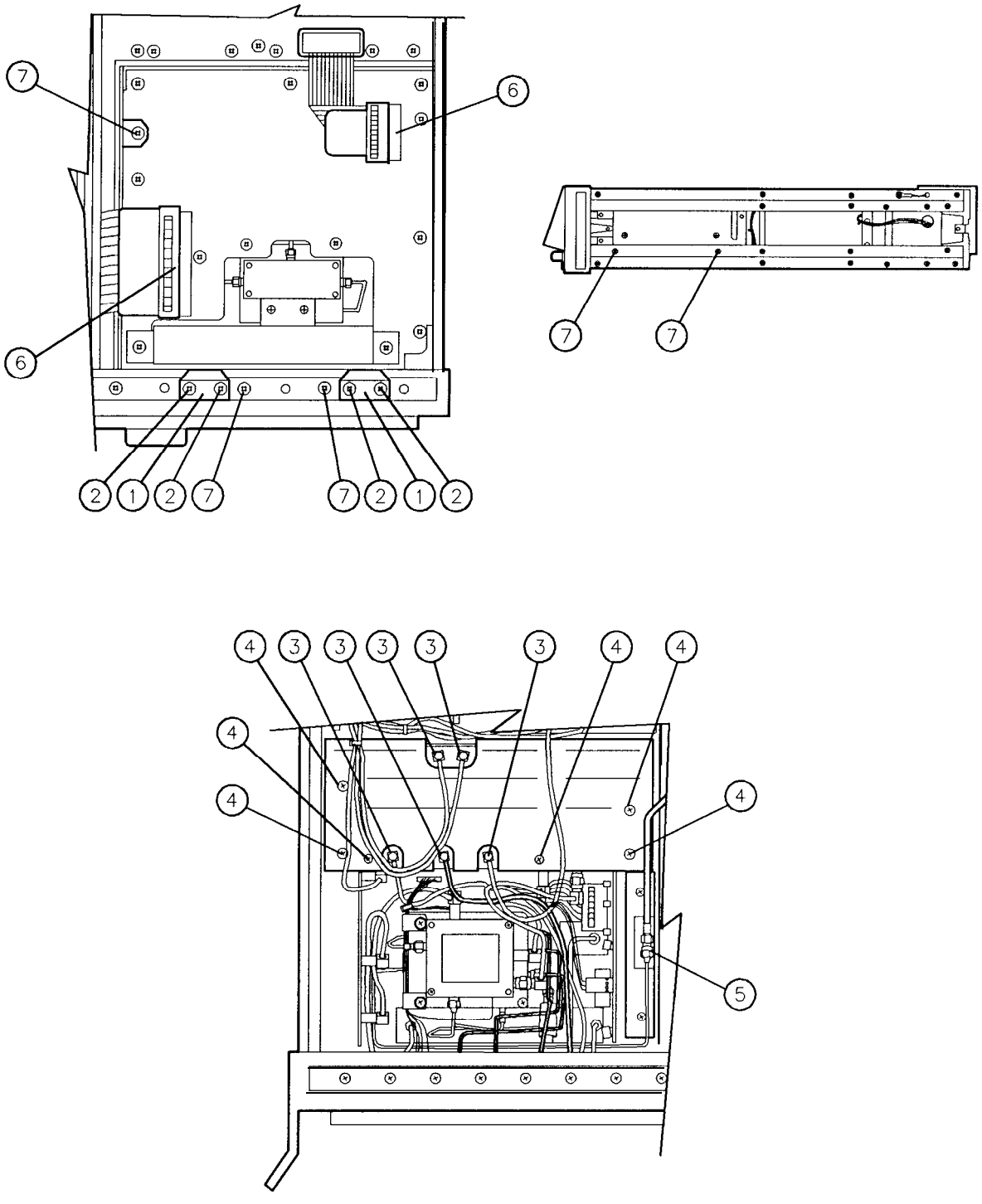

Figure 1. A6 RF Module Replacement

A6A1 Coaxial Switch and A6A17 300 MHz BPF Replacement

Note For location of hardware and cables referred to in this procedure, see Figure 2.

1. Remove front panel from RF Section. (See A5 Front Panel Section for front panel removal procedure.)
2. A6A1 Replacement
   a. Slightly loosen connectors ①, ②, and ③.
   b. Unsolder wires from the coaxial switch.
      1 (brown) wire from input ①
      3 (orange) wire from input ⓒ⊕
      2 (red) wire from input ②
   c. Release coaxial switch ⑤ by removing two screws ④.
   d. Remove coaxial switch from three cables by completely disconnecting at connectors ①, ②, and ③.
   e. Resolder three wires to new coaxial switch.
   f. Connect three cables to coaxial switch ①, ②, and ③. Do not tighten connectors.
   g. Attach new coaxial switch to instrument with two screws ④.
   h. Tighten connectors to coaxial switch.
3. A6A17 Replacement
   a. Disconnect connectors ⑥ and ⑦ and remove A6A17 BPF from mounting clips.
   b. Install new A6A17 BPF in mounting clips and reconnect connectors.
4. Replace front panel. (See A5 Front Panel Section for front panel replacement procedure.)

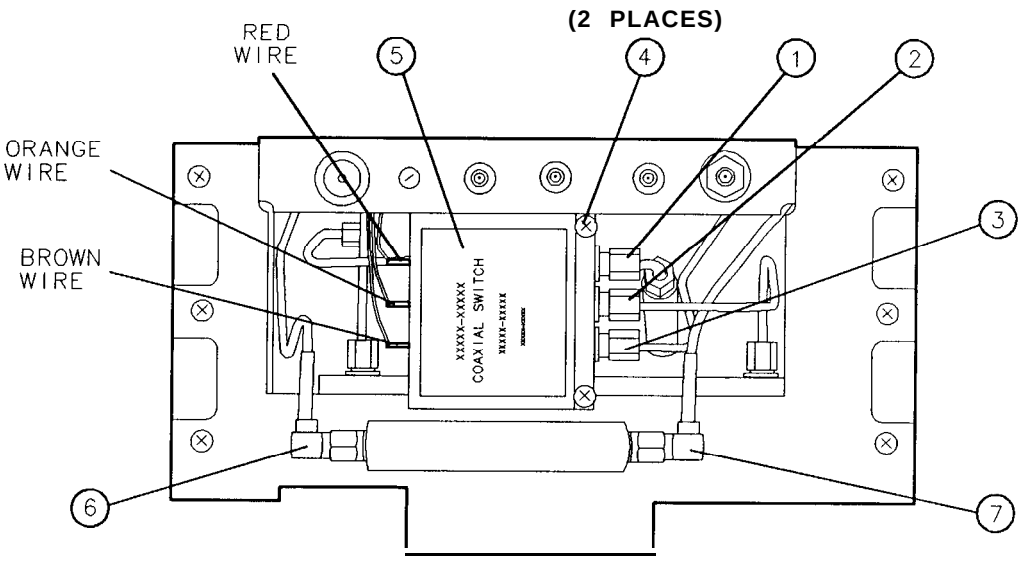

Figure 2. **A6A1** Coaxial Switch and **A6A17** 300 MHz BPF Replacement

A6A2 RF Attenuator Replacement

Note For location of hardware and cables referred to in this procedure, see Figure 3.

Removal

1. Remove front panel from RF Section. (See A5 Front Panel Section for front panel removal procedure.)
2. Remove top and bottom covers from RF Section.
3. Disconnect attenuator cables ①.
4. Remove two screws ② used to attach attenuator bracket to motherboard.
5. Remove two screws ③ used to attach attenuator bracket to "totem pole" assembly.
6. Remove RF Module PC board cover by removing six screws ④ and five cables ⑤ (three from A6A9 and two from A6A12).
7. Remove A6A9 leaving remaining cables attached.
8. Disconnect attenuator ribbon cable connector ⑥ from motherboard.
9. Attenuator (attached to bracket) is now free. Remove from RF Module.
10. Remove attenuator bracket from attenuator by removing two screws ⑦.

Installation

11. Attach attenuator bracket to attenuator by replacing two screws ⑦.
12. Place attenuator (attached to bracket) in RF Module.
13. Connect attenuator ribbon cable connector ⑥ to motherboard connector.
14. Align attenuator connectors ① with cable connectors and tighten cable connectors.
15. Replace two screws ③ used to attach attenuator bracket to “totem pole” assembly.
16. Replace two screws ② used to attach attenuator bracket to motherboard.
17. Replace A6A9 Phase Lock assembly.
18. Install PC board cover and replace six screws ④.
19. Reconnect five cables ⑤ (three to A6A9 and two to A6A12). Cables are color-coded and color codes are marked on PC board cover.
20. Replace top and bottom covers on RF Section.
21. Replace front panel. (See A5 Front Panel Section for front panel replacement procedure.)

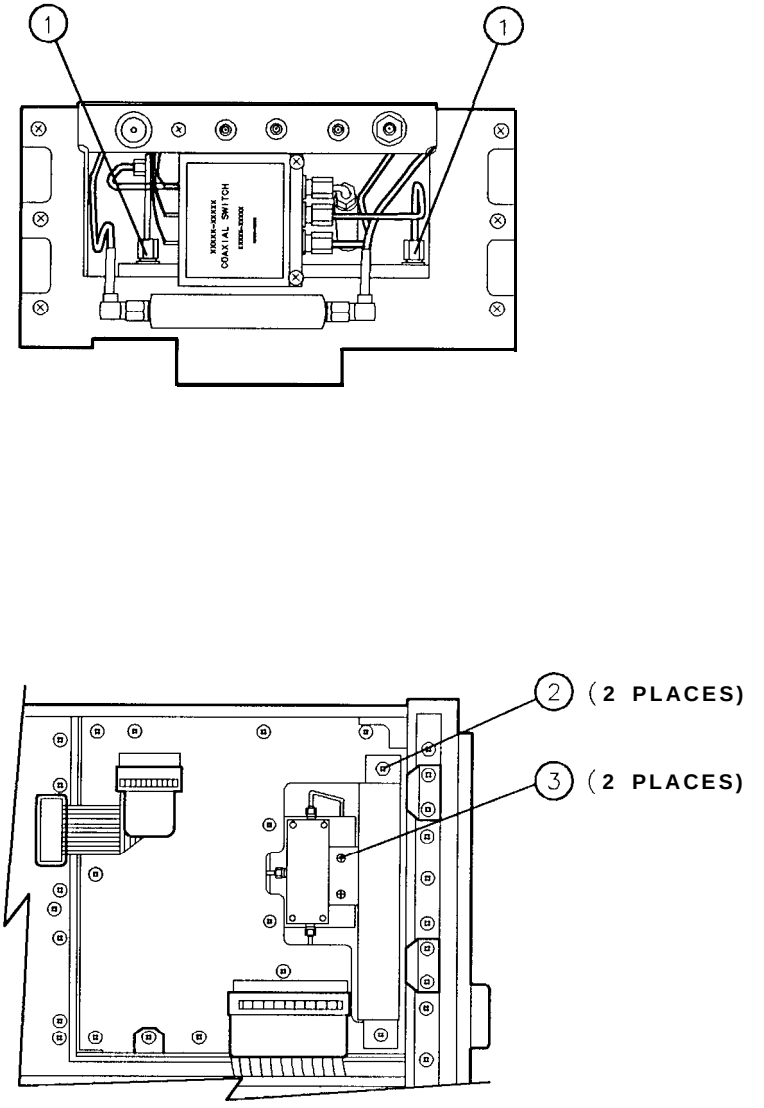

Figure 3. Replacement of **A6A2** RF Attenuator (1 of 2)

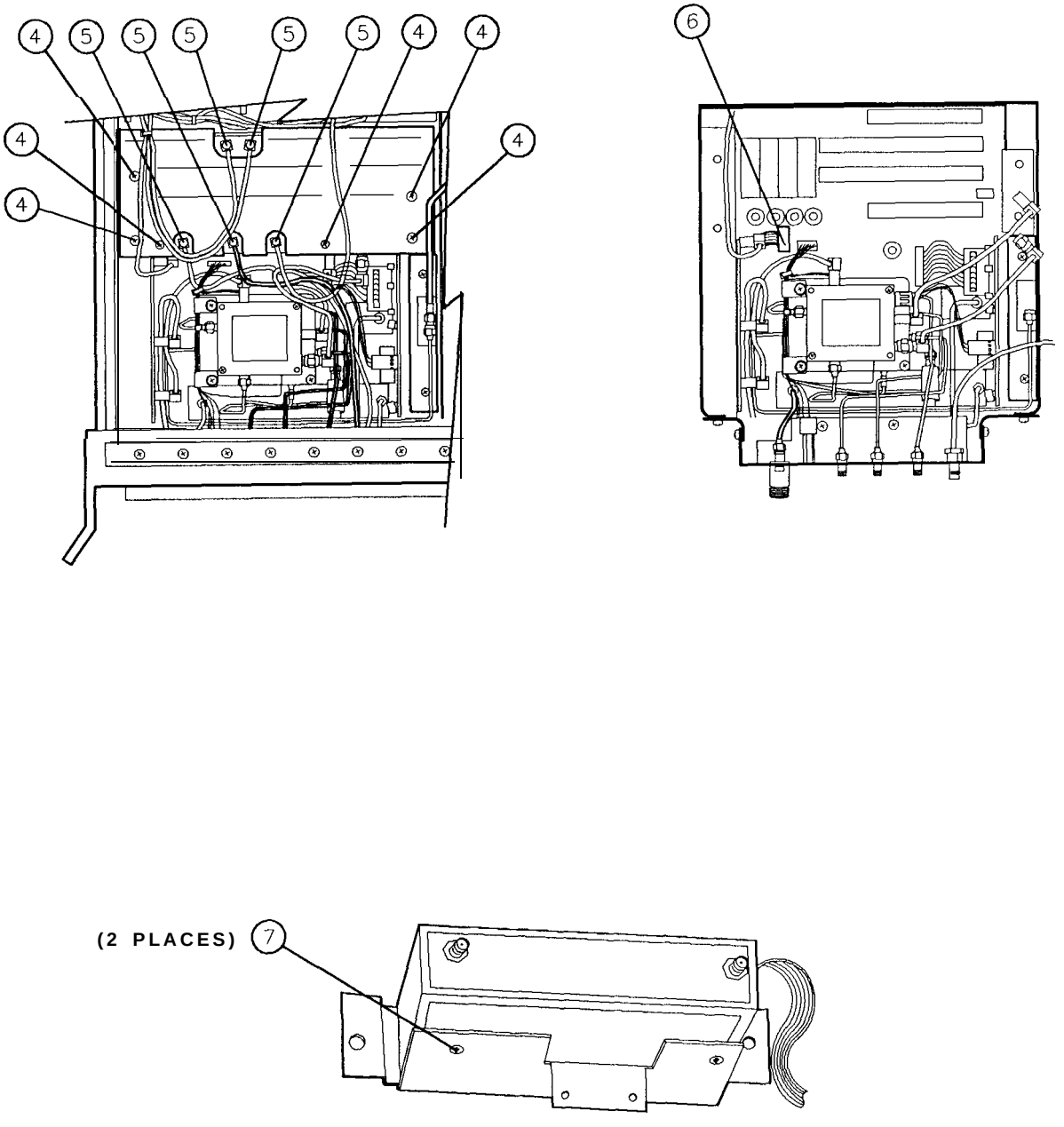

Figure 3. Replacement of **A6A2** RF Attenuator (2 of 2)

A6A4 Second Converter Replacement

Note For location of hardware and cables referred to in this procedure, see Figure 4.

Removal

1. Remove ac line cords and RF Section bottom cover.
2. Disconnect connectors ①, ④ and ⑧, single-pin connector ②, and double-pin connector ③ from Second Converter.
3. Disconnect the remaining cables from Second Converter
   - 1 (brown) cable from .321 OUT ⑦
   - 4 (yellow) cable from TUNE ⑨
4. Remove two screws ⑥ to remove Second Converter from A6 RF Module.

Installation

5. Position new Second Converter on mounting bracket. Secure with two screws ⑥.
6. Reconnect connector ①, connector ④, single-pin connector ②, and double-pin connector ③ to Second Converter.
7. Reconnect the following cables to Second Converter.
   - 1 (brown) cable to .321 OUT ⑦
   - 1 (brown) cable to .321 IN ⑧
   - 4 (yellow) cable to TUNE ⑨
8. Replace bottom cover and ac line cords.

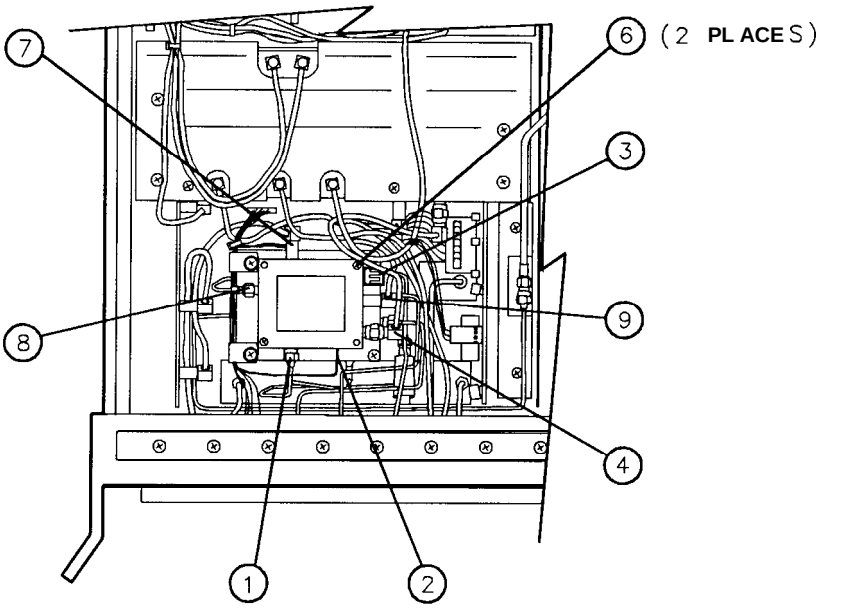

Figure 4. **A6A4** Second Converter Replacement

A6A6 First Converter Replacement

Note For location of hardware and cables referred to in this procedure, see Figure 5.

Removal

1. Remove ac line cords, IF-Display Section, and RF Section top cover.
2. Remove two screws ② to release A6A6 First Converter from A6 RF Module. Disconnect connectors ① from A6A6 First Converter.

Installation

3. Position new A6A6 First Converter in RF Module and reconnect connectors ①. Reinstall two screws ②.
4. Replace RF Section top cover. Attach IF-Display Section to RF Section. Reconnect ac line cords.

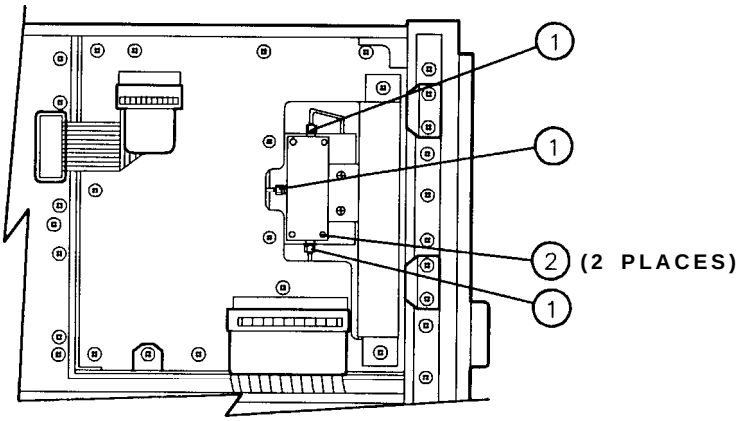

Figure 5. **A6A6** First Converter Replacement

A6A15 3.6 GHz BPF, A6A16 LPF, and A6A18 LPF Replacement

Note For location of hardware and cables referred to in this procedure, see Figure 6.

3

Removal

1. Remove ac line cords, separate instrument sections, and remove top and bottom covers from RF Section.
2. Remove five cables ① from A6 PC boards; three from A6A9 and two from A6A12.
3. Remove RF Module PC board cover by removing six screws ②.
4. Remove A6A9 assembly and A6A10, A6A11, and A6A12 PC boards.
5. Disconnect 4 (yellow) cable and 5 (green) cable from 2nd converter to release A6A9 assembly.
6. Disconnect coaxial cable ③ between All YTO Loop and A6A5 ACLU at the ACLU.
7. Disconnect cable between A6A8 YTX and A6A5 ACLU at the YTX.
8. Disconnect cable between front-panel 1ST LO OUTPUT connector and A6A5 ACLU at the ACLU.
9. Disconnect 1 (brown) cable from A6A4 2nd Converter .321 OUT.
10. Disconnect cable between A6A14 Limiter and A6A1 RF Switch at the RF Switch.
11. Remove three screws ④ used to attach ACLU cover plate one at a time, removing cable clamp and reinstalling the screws.
12. Disconnect wire harness connectors from ACLU and 2nd Converter to release wire harness from the “totem pole” assembly.

13. Disconnect cable between front-panel IF OUTPUT connector and A6A5 ACLU at the ACLU.
14. Disconnect cable between front-panel IF INPUT connector and A6A16 LPF at the LPF.
15. Disconnect wire harness plug from motherboard and position wire harness such that the "totem pole" assembly can be removed.
16. Remove two screws ⑤ attaching the "totem pole" assembly to the motherboard and two screws ⑥ attaching the "totem pole" assembly to the attenuator bracket.
17. Remove the "totem pole" assembly from RF Module.
18. A6A15, A6A16, OR A6A18 can now be replaced by disconnecting attached cables.

Installation

19. Replace A6A15, A6A16, or A6A18 in the "totem pole" assembly and reconnect cables.
20. Place the "totem pole" assembly in the RF Module.
21. Replace two screws ⑤ to attach the "totem pole" assembly to the motherboard and two screws ⑥ to attach the "totem pole" assembly to the attenuator bracket.

Caution



The YIG-Tuned Mixer (YTX) contains an extremely small and sensitive diode. A reverse voltage in excess of 3 volts may damage it. It is connected directly to the center conductor of the LO/IF connector, and is especially susceptible to blowout from electrostatic discharge. Before connecting any cable to this connector, first discharge the cable by connecting the center conductor to ground. It is recommended that the other end of the cable be connected first. Once the cable is properly installed (from the YTX to the ACLU), the BIAS pin of the ACLU is connected to the YTX diode and must also be treated with caution. A general rule is to connect all devices to ground before connecting them to the BIAS pin on the ACLU.

22. Reconnect cable to A6A8 YTX.
23. Reconnect cable to A6A1 RF Switch.
24. Reconnect cable from front-panel 1ST LO OUTPUT to A6A5 ACLU.
25. Reconnect cable from front-panel IF OUTPUT to A6A5 ACLU.
26. Reconnect cable from front-panel IF INPUT to A6A16 LPF.
27. Reconnect cable ③ between All YTO Loop and A6A5 ACLU.
28. Reconnect 1 (brown) cable to and converter .321 OUT.
29. Remove three screws ④ from A6A5 ACLU cover plate one at a time replacing cable clamps then replacing screws.

30. Reconnect all wire harness connectors to A6A5 ACLU and A6A4 2nd Converter as follows.
    - A6A4 2nd Converter

      green (5) Wire to I_E

      white/brown (91) wire to V_c

      white/black (90) wire to SW
    - A6A5 ACLU

      gray (8) wire to BIAS

      white/red (92) wires to +5 V dc (three pins)
31. Reconnect wire harness to motherboard.
32. Replace A6A9 assembly and A6A10, A6A11, and A6A12 PC boards.
33. Replace PC board cover and install six screws ②.
34. Reconnect 4 (yellow) cable and 5 (green) cable to 2nd Converter.
35. Reconnect five cables ① to A6 PC boards; three to A6A9 and two to A6A12.
36. Replace top and bottom covers on RF Section, recombine instrument sections, and reconnect ac line cords.

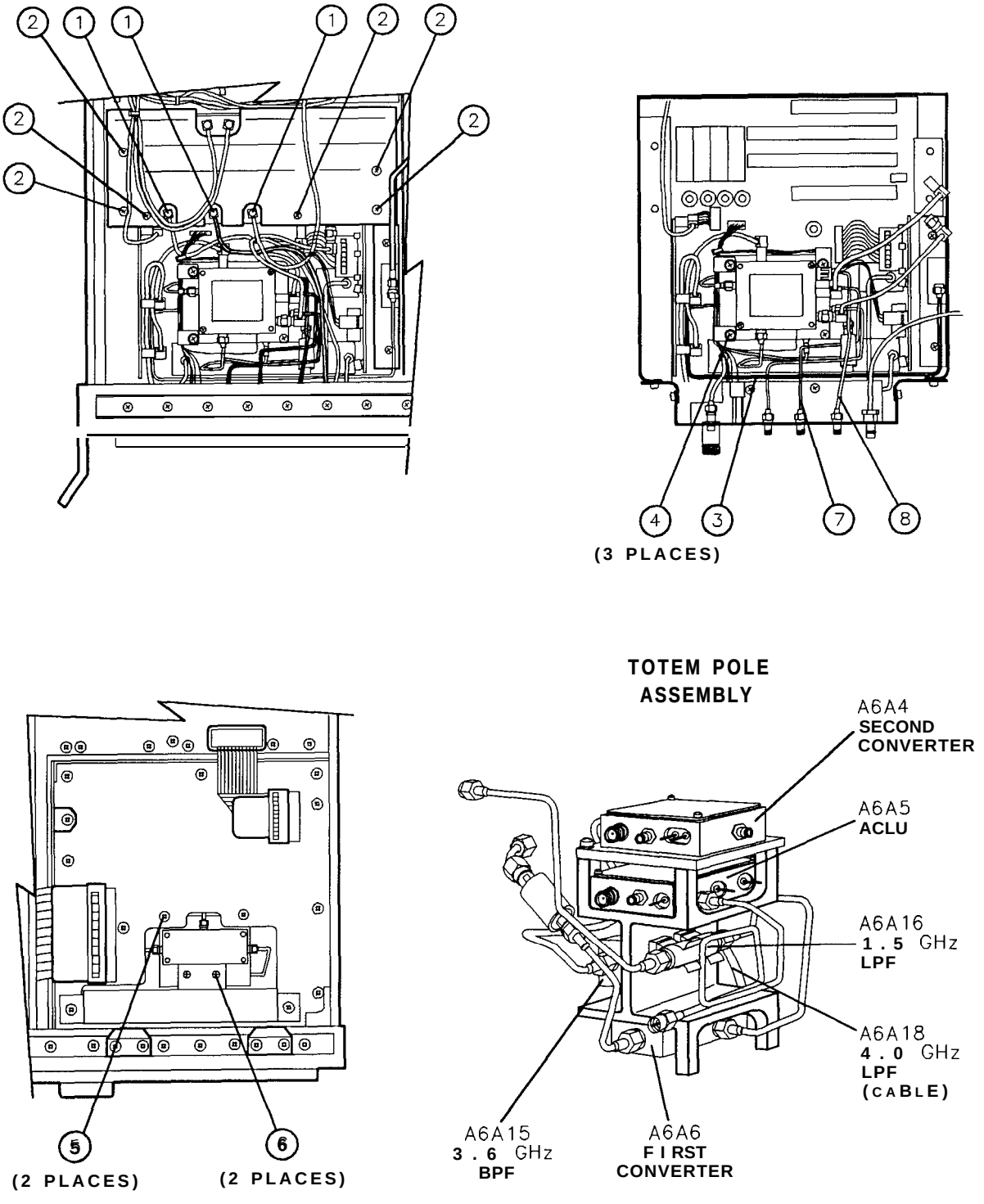

Figure 6. **A6A15** BPF, **A6A16** LPF, and **A6A18** LPF Replacement

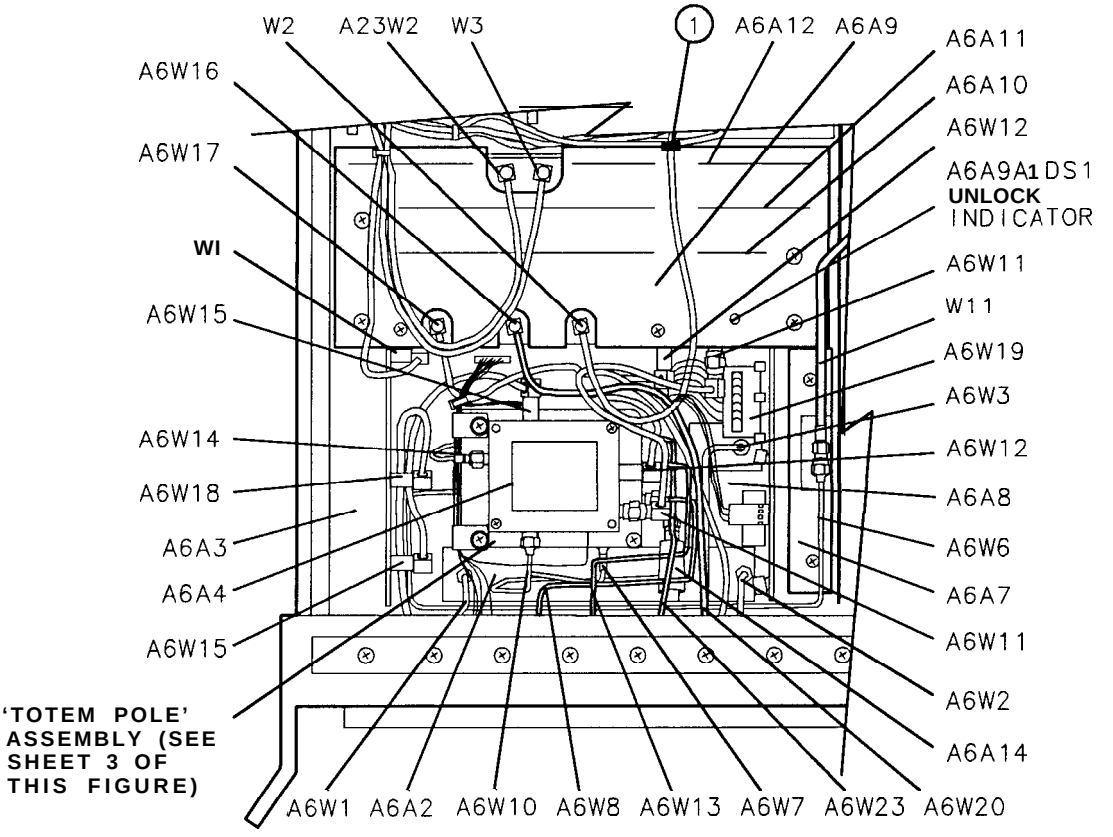

Figure 7. A6 RF Module, Parts Identification (1 of 6)

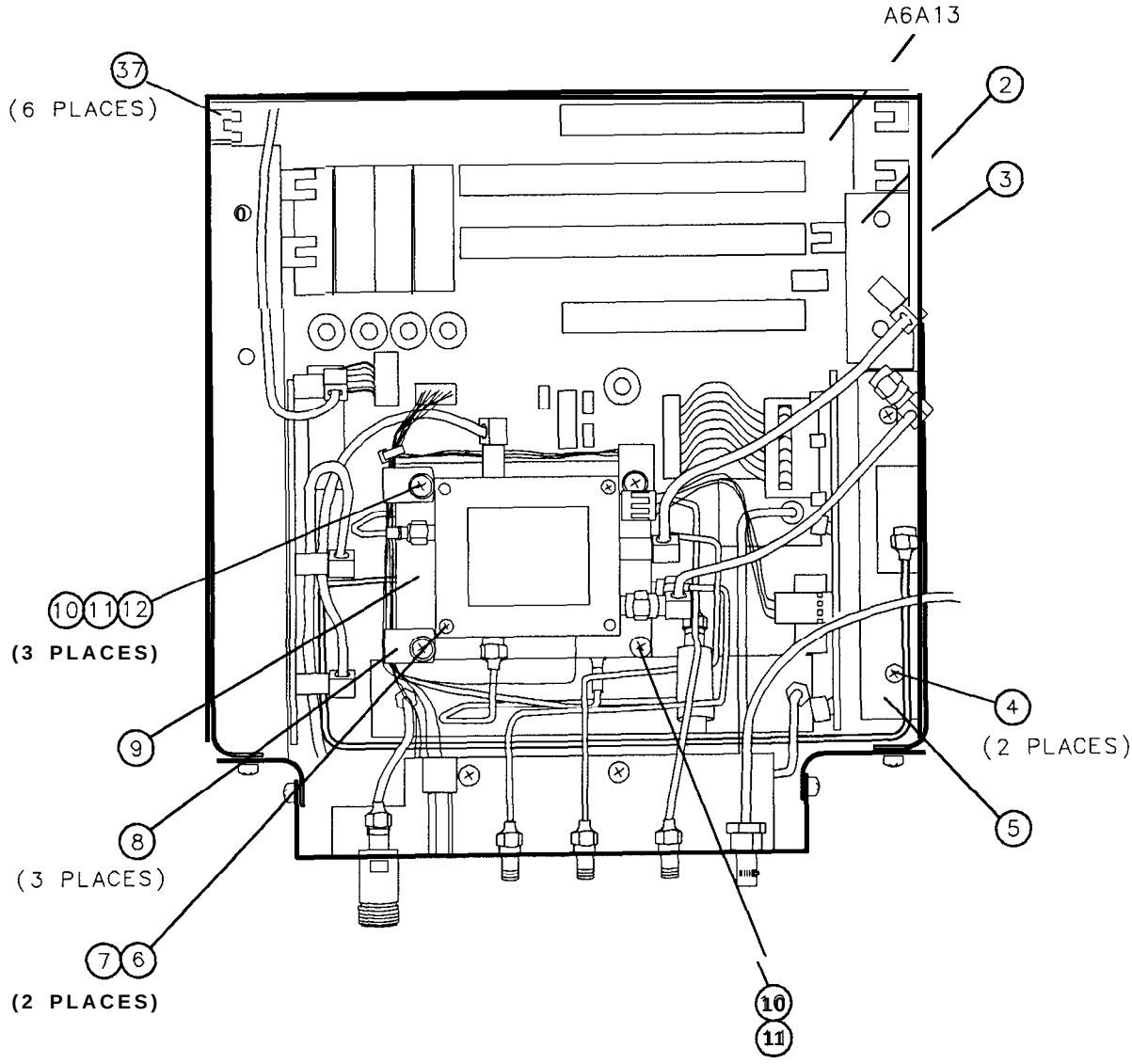

Figure 7. A6 RF Module, Parts Identification (2 of 6)

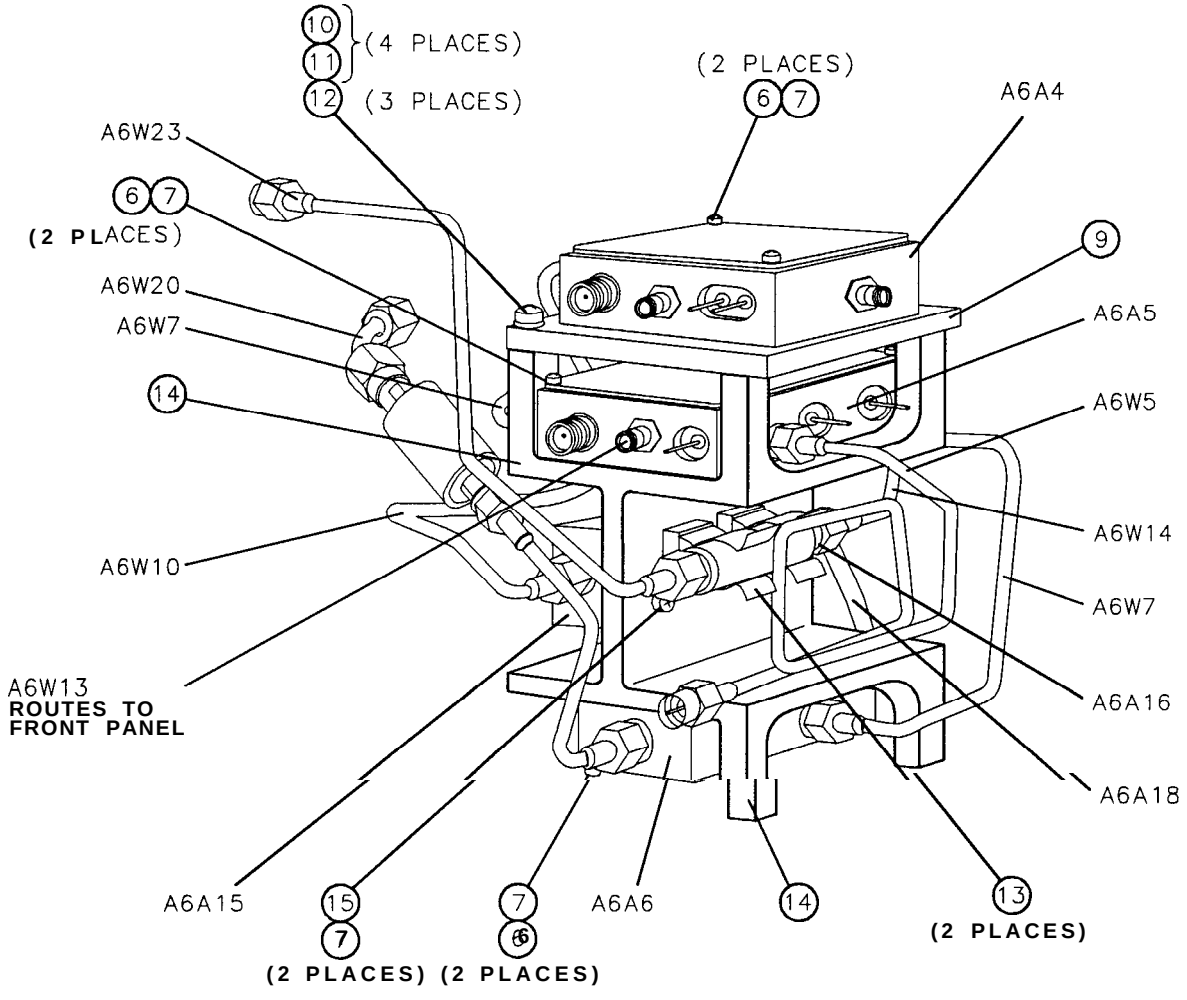

Figure 7. A6 RF Module, Parts Identification (3 of 6)

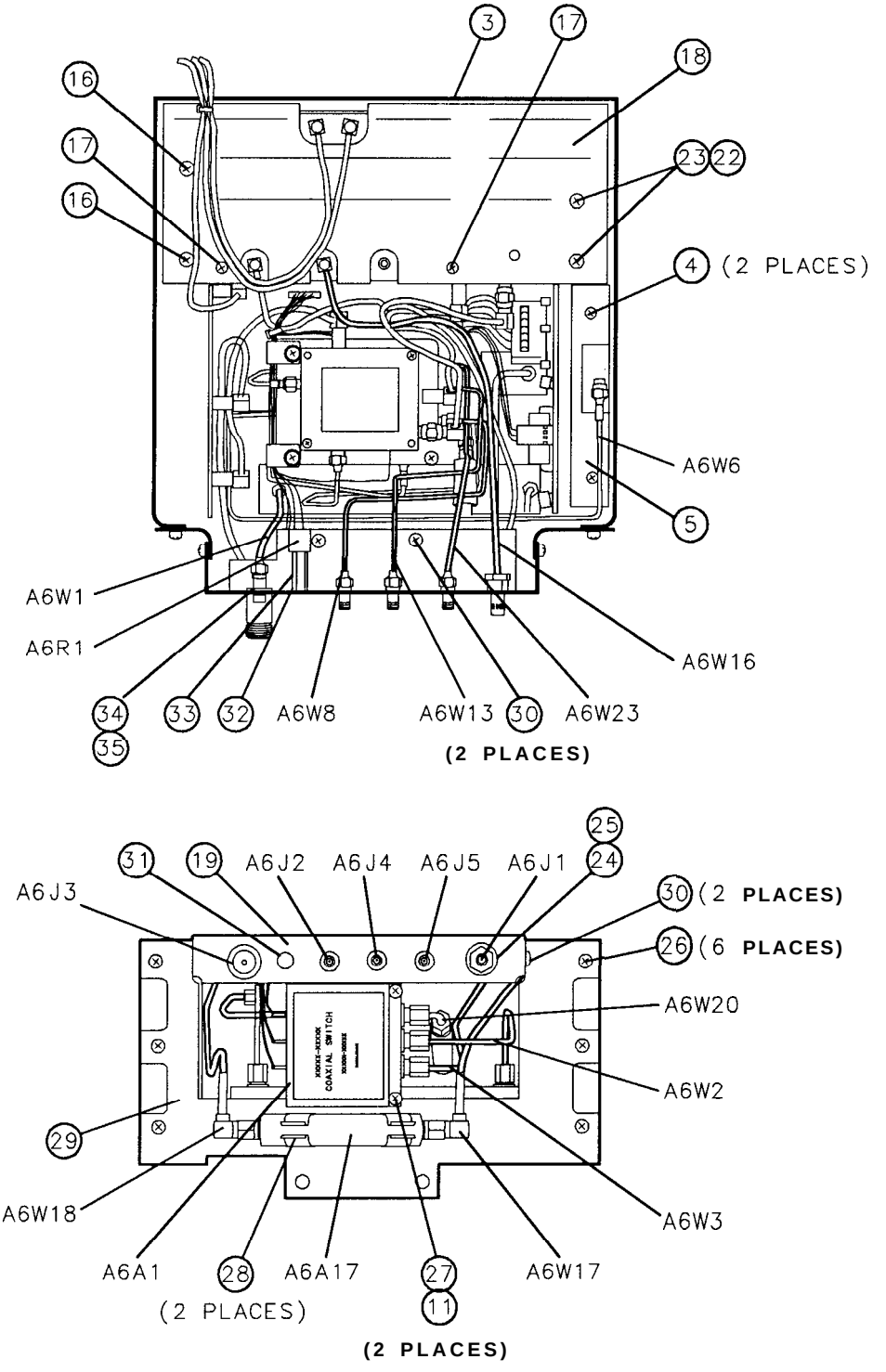

Figure 7. A6 RF Module, Parts Identification (4 of 6)

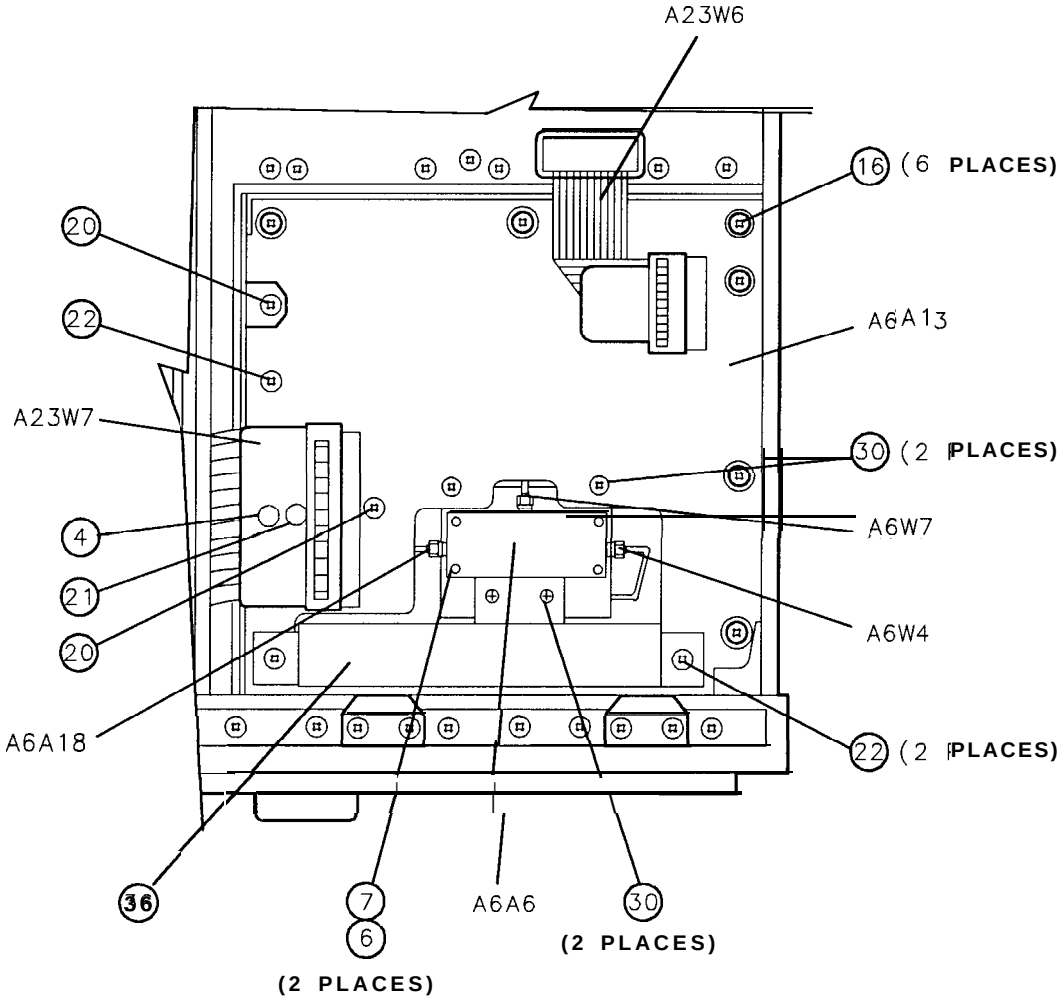

Figure 7. A6 RF Module, Parts Identification (5 of 6)

Iten	HP Part Number	CI	Description	Mfr Code	Mfr Part Number
1	0400-0009	9	GROMMET, RUBBER (FOR W2)	28480	04004009
2	8566900021	6	AIR DUCT, RF MODULE	28480	85660-0002
3	85660-0001:	9	BRACKET, MAIN, RF MODULE	28480	85660-0001
4	2360-0116	5	SCREW, MACH, 632, .312-IN LG, FLAT HD	28480	2360-0116
5	856690002:	9	HEAT SINK, YTX CURRENT DRIVER	28480	85660-0002
6	0520-0137	8	SCREW, MACH, 2-56, .75-IN LG, PAN HD	28480	0520-0137
7	2190-0890	1	WASHER, SPLIT, 2-56 (FOR SCREWS (6) & (15))	28480	2190-0890
8	1400-0053	4	CABLE CLAMP (FOR SCREW (10))	28480	1400-0053
9	85660-0002:	7	MOUNTING PLATE, 2ND CONVERTER	28480	85660-0002
10	2200-0145	2	SCREW, MACH, 4-40, .438-IN LG, PAN HD	28480	2200-0145
11	2190-0003	8	WASHER, SPLIT, 4-40 (FOR SCREWS (10) & (27))	28480	2190-0003
12	3050-0105	6	WASHER, FLAT, 4-40 (FOR SCREWS (10))	28480	3050-0105
13	1400-0942	0	COMPONENT CLIP (FOR A6A16)	28480	14009942
14	356692007:	0	MOUNT, MICROCIRCUIT, "TOTEM POLE"	28480	85660-2007
15	0520-0130	1	SCREW, MACH, 2-56, .375-IN LG, PAN HD	28480	0520-0130
16	2360-0115	4	SCREW, MACH, 632, .312-IN LG, PAN HD	28480	2360-0115
17	2200-0105	4	SCREW, MACH, 4-40, .312-IN LG, PAN HD	28480	2200-0105
18	85660-0007:	0	COVER, RF MODULE PC BOARD	28480	85660-0007:
19	85660-0005:	1	BRACKET, CONNECTOR, RF MODULE	28480	85660-0005.
20	2360-0119	8	SCREW, MACH, 632, .438-IN LG, PAN HD	28480	2360-0119
21	2360-0122	3	SCREW, MACH, 632, .5-IN LG, FLAT HD	28480	2360-0122
22	2360-0117	6	SCREW, MACH, 632, .375-IN LG, PAN HD	28480	2360-0117
23	3050-0010	2	WASHER, FLAT, 632 (FOR SCREW (22))	18480	3050-0010
24	2950-0154	2	NUT, HEX, 1/2 IN (FOR A6J1)	18480	2950-0154
25	1190-0054	9	WASHER, LOCK, 1/2 IN (FOR A6J1)	28480	2190-0054
26	1360-0113	2	SCREW, MACH, 632, .25-IN LG, PAN HD	18480	2360-0113
27	1200-0151	0	SCREW, MACH, 4-40, .75-IN LG, PAN HD	18480	2200-0151
28	1400-0937	3	COMPONENT CLIP (FOR A6A17)	28480	14009937
29	85660-00014	8	BRACKET, FRONT, RF MODULE	28480	85660-0001
30	2200-0103	2	SCREW, MACH, 4-40, .25-IN LG, PAN HD	28480	2200-0103
31	1490-0968	9	PANEL BUSHING (FOR A6R1)	28480	1490-0968
32	2190-0027	6	WASHER, LOCK, .256 ID (FOR A6R1)	28480	2190-0027
33	1590-0061	4	NUT, HEX, 1/4 IN (FOR A6R1)	28480	1590-0061
34	2950-0132	6	NUT, HEX, 7/16 IN (FOR A6J3)	28480	2950-0132
35	2190-0104	0	WASHER, LOCK, 7/16 IN (FOR A6J3)	28480	2190-0104
36	85660-00019	3	BRACKET, ATTENUATOR, RF MODULE	28480	35660-0001
37	1403-0152	9	30ARD GUIDE, BLACK	18480	1403-0152
	0403-0153	0	BOARD GUIDE, BROWN	28480	04030153
	0403-0154	1	BOARD GUIDE, RED	28480	0403-0154

Figure 7. A6 RF Module, Parts Identification (6 of 6)

RF Module

Reference Designator	HP Part Number	CD	Qty	Description	Mfr Code	Mfr Part Number
A6A1	31066029	2	1	RF SWITCH SPDT F SMA	28480	3106-0029
A6A1	85660-60101	0	1	RF SWITCH (OBSOLETE. ORDER HP PART NUMBER 85660-60228 FOR REPLACEMENT.)	28480	85660-60101
A6A2	85660-60336	3	1	RF ATTENUATOR/ERROR CORRECTION ROM (INCLUDES A12U8)	28480	85660-60336
A6A2	85660-60304	5	1	RF ATTENUATOR/ERROR CORRECTION ROM (INCLUDES A12U8) (OBSOLETE. ORDER HP PART NUMBER 8566669336 FOR REPLACEMENT.)	28480	85660-60304
A6A2	55660-60121	4	1	RF ATTENUATOR/ERROR CORRECTION ROM (INCLUDES A12U8) (OBSOLETE. ORDER HP PART NUMBER 8566969336 FOR REPLACEMENT.)	28480	85660-60121
A6A3	85660-60003	1	1	LAST CONVERTER ASSEMBLY (INCLUDES A6A3A1 LAST CONVERTER BOARD)	28480	85660-60003
A6A3A1	85660-60002	0	1	BOARD ASSEMBLY, LAST CONVERTER (PART OF A6A3 LAST CONVERTER ASSEMBLY. MAY NOT BE ORDERED SEPARATELY.)	28480	85660-60002
A6A4	50867248	9	1	SECOND CONVERTER	28480	50867248
A6AS	50867133	1	1	AMPLIFIER/COUPLER/LOAD UNIT (ACLU)	28480	50867133
A6A6	50867247	8	1	FIRST CONVERTER	28480	50867247
A6A7	85660-60128	1	1	BOARD ASSEMBLY, YIG-TUNED MIXER CURRENT DRIVER	28480	85660-60128
A6A8	50867226	3	1	YIG-TUNED MIXER (YTX) (NEW)	28480	5086-7226
A6A8	50866226	1	1	YIG-TUNED MIXER (YTX) (RESTORED 5086-7226)	28480	50866226
A6A9	35660-60256	6	1	PHASE LOCK ASSEMBLY (INCLUDES A6A9A1 PHASE LOCK BOARD) (SERIAL NUMBER PREFIXES: 2504A AND ABOVE)	28480	85660-60256
A6A9	35660-60226	0	1	PHASE LOCK ASSEMBLY (INCLUDES A6A9A1 PHASE LOCK BOARD) (SERIAL NUMBER PREFIXES: 2410A-2503A)	28480	85660-60226
A6A9A1	35660-60253	3	1	BOARD ASSEMBLY, PHASE LOCK (SERIAL NUMBER PREFIXES: 2504A AND ABOVE) (PART OF A6A9 PHASE LOCK ASSEMBLY. MAY NOT BE ORDERED SEPARATELY .)	28480	85660-60253
A6A9A1	35660-60202	2	1	BOARD ASSEMBLY, PHASE LOCK (SERIAL NUMBER PREFIXES: 2410A-2503A) (PART OF A6A9 PHASE LOCK ASSEMBLY. MAY NOT BE ORDERED SEPARATELY.)	28480	35660-60202
A6A10	35660-60322	7	1	BOARD ASSEMBLY, MISCELLANEOUS BIAS/RELAY DRIVER (SERIAL NUMBER PREFIXES: 2747A AND ABOVE)	28480	35660-60322
A6A10	85660-60180	5	1	BOARD ASSEMBLY, MISCELLANEOUS BIAS/RELAY DRIVER (SERIAL NUMBER PREFIXES:2410A-2729A)	28480	35660-60180
A6A11	35660-60238	4	1	BOARD ASSEMBLY, SLOPE GENERATOR (SERIAL NUMBER PREFIXES: 2613A AND ABOVE)	28480	85660-60238

Reference Designato	HP Part Number	CD	Qty	Description	Mfr Code	Mfr Part Number
A6A11	85660-6012(	9	1	BOARD ASSEMBLY, SLOPE GENERATOR (SERIAL NUMBER PREFIXES: 2410A-2611A)	284810	85660-6012(
A6A12	85660-6036(	9	1	BOARD ASSEMBLY, YIG-TUNED MIXER (YTX) DRIVER (SERIAL NUMBER PREFIXES: 2936A AND ABOVE)	28480	85660-60366
A6A12	85660-6023!	1	1	BOARD ASSEMBLY, YIG-TUNED MIXER (YTX) DRIVER (SERIAL NUMBER PREFIXES: 2503A-2928A)	28480	85660-6023
A6A12	85660-6001:	3	1	BOARD ASSEMBLY, YIG-TUNED MIXER (YTX) DRIVER (SERIAL NUMBER PREFIXES: 2410A-2449A)	28480	85660-6001
A6A13	85660-6001-	4	1	BOARD ASSEMBLY, RF MODULE MOTHERBOARD	28480	85660-6001
A6A14	5086-7261	6	1	LIMITER, 0-2.5 GHZ	28480	5086-7261
A6A15	9135-0067	5	1	BANDPASS FILTER, 3.6 GHZ, SMA CONNECTORS	28480	9135-0067
A6A16	0955-0487	2	1	LOW PASS FILTER, 1.0 GHZ (SERIAL NUMBER PREFIXES: 2950A AND ABOVE)	28480	039554487
A6A16	5086-7299	0	1	LOW PASS FILTER, 1.5 GHZ (SERIAL NUMBER PREFIXES: 2410A-2949A)	28480	5086-7299
A6A17	0955-0117	5	1	BANDPASS FILTER, 300 MHZ	28480	0955-0117
A6A18	9135-0108	5	1	LOW PASS FILTER, 26 GHZ	28480	9135-0108
A6J1				PART OF A6W16 (CAL OUTPUT)		
A6J2	1250-1666	8	1	ADAPTER-COAX, STR F-SMA F-SMA (FIRST LO OUTPUT)	28480	1250-1666
A6J3	86290-60005	7	1	RF INPUT CONNECTOR, TYPE N (INDIVIDUAL PARTS ARE LISTED IN GENERAL PARTS LISTING)	28480	86290-6000
A6J4	.250-1666	8	1	ADAPTER-COAX, F-SMA F-SMR (IF OUTPUT)	28480	1250-1666
A6J5	250-1666	8	1	ADAPTER-COAX, F-SMA F-SMA (IF INPUT)	28480	1250-1666
A6R1	100-1717	4	1	RESISTOR-VAR CONTROL CCP 50K 20% LIN	28480	2100-1717
A6W1	15660-20073	7	1	CABLE ASSEMBLY, COAX A6J3 RF INPUT TO A6A2 RF ATTENUATOR (0-22 GHZ)	28480	85660-6007:
A6W2	85660-20074	2	1	CABLE ASSEMBLY, COAX A6A2 RF ATTENUATOR TO A6A1 RF SWITCH (O-22 GHZ)	28480	85660-2007-
A6W3	85660-20075	3	1	CABLE ASSEMBLY, COAX A6A1 RF SWITCH TO A6A8 YTX (2-22 GHZ)	28480	85660-2007!
A6W4	85660-20079	7	1	CABLE ASSEMBLY, COAX A6A14 LIMITER TO A6A6 1ST CONVERTER (O-2.5 GHZ)	284808	85660-2007!
A6W5	85660-20076	4	1	CABLE ASSEMBLY, COAX A6A8 YTX TO/FROM A6A5 ACLU	28480	815660-20076
A6W6	85660-20077	5	1	CABLE ASSEMBLY, COAX AT2 3DB ATTENUATOR TO A6A5 ACLU (YTO LOOP OUT)	28480	815660-2007:
A6W7	5660-20082	2	1	CABLE ASSEMBLY, COAX A6A5 ACLU TO A6A6 1ST CONVERTER (3.6 - 6.1 GHZ)	28480	85660-2008:

RF Module (continued)

Reference Designator	HP Part Number	CD	Qty	Description	Mfr Code	Mfr Part Number
A6W8	85660-20104	9	1	CABLE ASSEMBLY, COAX A6A5 ACLU TO A6J2 (FRONT PANEL) (lST LO OUTPUT)	28480	85660-2010
A6W10	85660-20081	1	1	CABLE ASSEMBLY, COAX A6A15 3.6 GHZ TO A6A4 SECOND CONVERTER (3621.4 MHZ) BPF	28480	85660-2008
A6W11	85660-60055	3	1	CABLE ASSEMBLY, COAX 5 A6A4 SECOND CONVERTER TO A6A9 PHASE LOCK (3.3 GHZ)	28480	856606005:
A6W12	85660-60097	3	1	CABLE ASSEMBLY, COAX 4 A6A9 PHASE LOCK TO A6A4 SECOND CONVERTER (TUNE VOLTAGE)	28480	85660-60097
A6W13	85660-20103	8	1	CABLE ASSEMBLY, COAX A6A5 ACLU TO A6J4 (FRONT PANEL) (IF OUTPUT)	28480	85660-2010:
A6W14	85660-20112	9	1	CABLE ASSEMBLY, COAX A6A16 LPF TO A6A4 SECOND CONVERTER (321.4 MHZ)	28480	85660-20112
A6W15	8566960057	5	1	CABLE ASSEMBLY, COAX 1 A6A4 SECOND CONVERTER TO A6A3 LAST CONVERTER (321.4 MHZ)	28480	8566060055
A6W16	85660-60058	6	1	CABLE ASSEMBLY, COAX 0 A6A9 PIIASE LOCK TO A6J1 (FRONT PANEL) (CAL OUTPUT)	28480	8566060058
A6W17	85660-60056	4	1	CABLE ASSEMBLY, COAX 2 A6A9 PHASE LOCK TO A6A17 300 MHZ BPF (300 MHZ)	28480	8566060056
A6W18	85660-60054	2	1	CABLE ASSEMBLY, COAX 2 A6A17 300 MHZ BPF TO A6A3 LAST CONVERTER (300 MHZ)	28480	8566060054
A6W19	8120-2847	1	1	CABLE ASSEMBLY, 14 WIRE-RIBBON A6A13 RF MOTHERBOARD TO A6A7 YTX CURRENT DRIVER	28480	8120-2847
A6W20	1250-1397	2	1	ADAPTER-COAX A6A1 RF SWITCH TO A6A14 LIMITER (O-2.5 GHZ)	28480	1250-1397
A6W21	85660-60060	0	1	CABLE ASSEMBLY, A6A1/A6A4/A6A5/A6R1 HARNESS TO A6A13 RF MOTIIERBOARD	28480	8566060060
A6W22	85660-20101	6	1	CABLE ASSEMBLY, COAX A6J4 (FRONT PANEL) (IF OUTPUT) TO A6J5 (FRONT PANEL)(IF INPUT) (FRONT PANEL JUMPER)	28480	85660-20101
A6W23	85660-20102	7	1	CABLE ASSEMBLY, COAX A6J5 (FRONT PANEL)(IF INPUT) TO A6A16 LPF (321.4 MHZ)	28480	85660-20102

RF SECTION

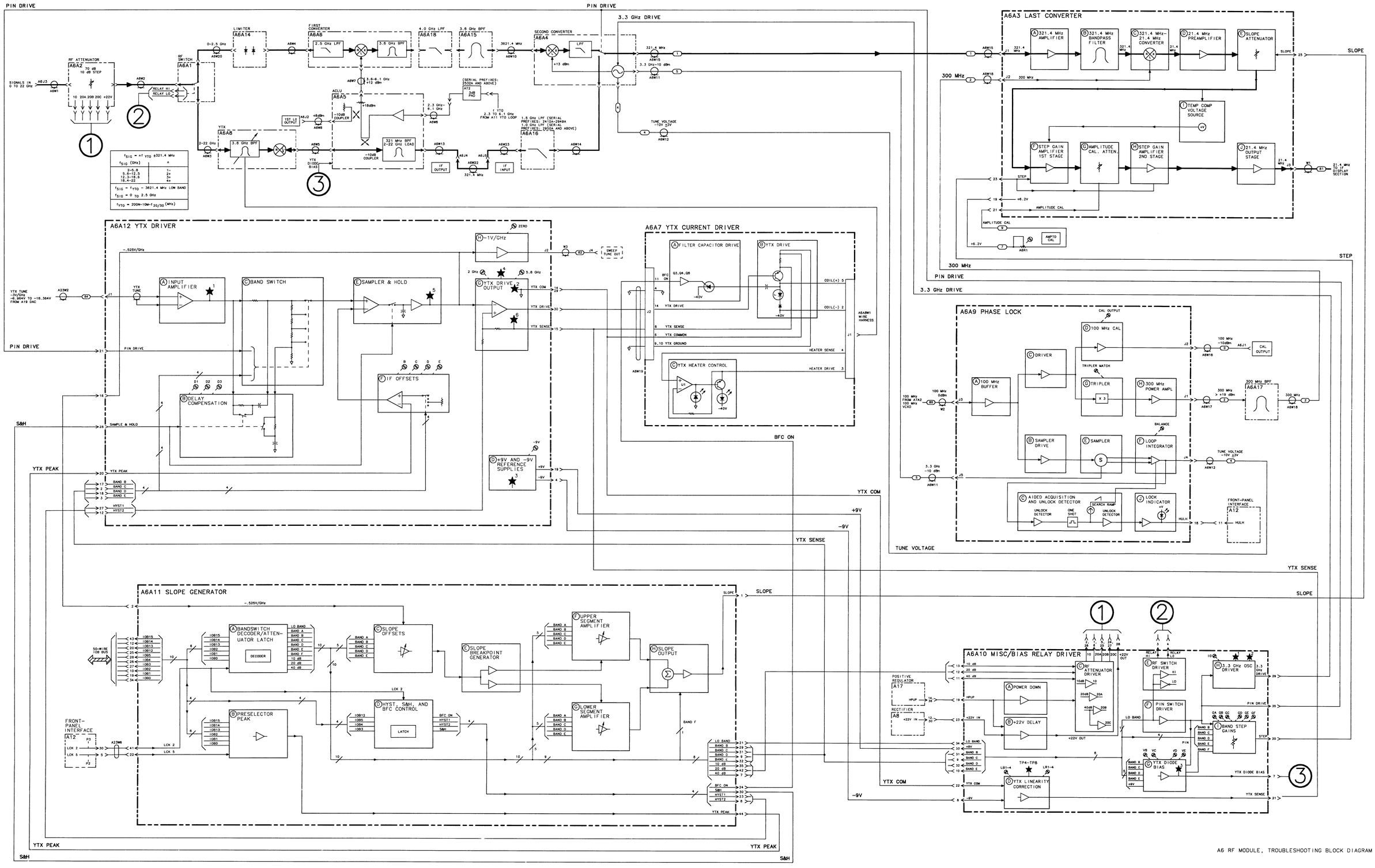

A6 RF MODULE, TROUBLESHOOTING BLOCK DIAGRAM

A6A3

A6A3 Last Converter, Circuit Description

The Last Converter has three main purposes:

1. Converting the 321.4 MHz IF signal from the A6 RF Module down to 21.4 MHz for processing by the IF-Display Section.
2. Providing the means for correcting for variations in conversion loss versus frequency in the input circuitry.
3. Filtering out 278.6 MHz image response.

The Last Converter consists of 11 basic elements. They are a 321.4 MHz amplifier, a 321.4 MHz bandpass filter, a 321.4 to 21.4 MHz converter a 21.4 MHz preamp, two pin diode attenuators, two pin diode controlled variable gain amplifiers, an output stage, a temperature compensation circuit, and power supply filtering.

Power Supplies Ⓚ

The power supply filtering consists of series inductors and shunt capacitors (L21 to L24 and C49 to C53). In addition to this, R38 and VR1 provide a 6.2 V source used for biasing transistors.

321.4 MHz Amplifier Ⓐ

The 321.4 MHz amplifier consists of Q8 and its associated circuitry. Q7 provides bias for Q8 by setting the base current.

321.4 MHz Bandpass Filter Ⓑ

The 321.4 MHz amplifier drives the 321.4 MHz bandpass filter which consists of L4 to L8 and C8 to C12. This filter is made up of five LC tank circuits coupled magnetically and capacitively. Capacitive coupling occurs through PC board traces on the circuit side of the PC board. Coupling into and out of the filter is done with tapped inductors L4 and L8. The filter is tuned by means of C8 to C12. This filter rejects the 278.6 MHz image response.

321.4 to 21.4 MHz Converter Ⓒ

The 321.4 MHz filter drives the 321.4 to 21.4 MHz converter. This converter consists of a packaged double-balanced mixer, U1. The 300 MHz LO for this converter comes from the A6A9 Phase Lock.

21.4 MHz Preamplifier Ⓓ

The 321.4 to 21.4 MHz converter drives the 21.4 MHz preamp which consists of Q6 and its associated components. Q5 provides bias for Q6 by setting the base current. L10, C22, and C23 form a series resonant circuit producing a notch in the frequency response of this amplifier at 10.7 MHz. This is to prevent the second harmonic of 10.7 MHz from causing a spurious response.

Slope Attenuator Ⓔ

The HP 8566 is a harmonic mixing spectrum analyzer, and as such has five bands of frequencies to cover the range of 0 to 22 GHz. When changing from band to band, the conversion loss of the input mixer changes. Also within each band there are variations of conversion loss with frequency.

The variations of conversion loss within each band are compensated by pin diodes CR1 to CR4 and associated circuitry. Pin diodes have a property of changing RF impedance as their dc current is varied. Thus CR1/CR2 and CR3/CR4 form the two elements of a voltage divider. The current through CR1/CR2 is fixed by R10 and R11. The current through CR3/CR4 is determined by circuitry on the A6A11 Slope Generator. This forms a current controlled variable attenuator. Pin diodes CR1/CR2 are used in place of a fixed resistor to provide temperature tracking with CR3/CR4.

Step Gain Amplifier 1 Ⓕ and Step Gain Amplifier 2 Ⓗ

The variations of conversion loss from band to band are compensated for by two identical variable gain amplifiers made up of Q3 and Q10 and associated circuitry (Q4 and Q9 are emitter follower buffers). A simplified circuit of one of these stages is shown in Figure 1. The gain of the amplifier is determined approximately by the following equation.

$$\text{Gain} \approx \frac{\text{Impedance (CR8, CR9, and CR10)}}{\text{Impedance (CR5, CR6, and CR7)}}$$

The impedance of CR8, CR9, and CR10 is determined by R23 and temperature compensation circuitry (Q1).

The impedance of CR5, CR6, and CR7 is determined by the current from the step gain circuit on the A6A10 Relay Driver.

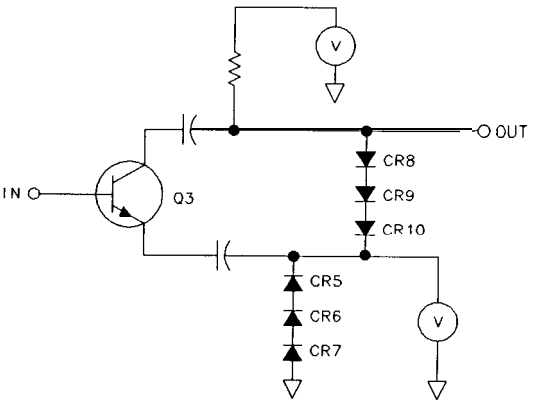

Figure 1. Step Gain Amplifier, Simplified Schematic

Amplitude Calibration Attenuator (G)

Q2 is an emitter follower buffer driving a second pin diode attenuator, CR11 to CR14. The current through CR11 and CR12 is determined by the front-panel control A6R1, AMPTD CAL. The current through CR13 and CR14 is fixed by R27. This circuit provides for amplitude calibration of the instrument.

21.4 MHz Output (J)

Q11 and Q12 form the output stage for the Last Converter. Q11 is an emitter follower driving a common emitter amplifier Q12.

Temperature Compensation Voltage Source (I)

Q1 provides a voltage to set the current in CR8 to CR10 and CR15 to CR17. This voltage varies with temperature, changing the gain of the two step-gain amplifiers to compensate for gain changes with temperature elsewhere in the Last Converter.

A6A3 Last Converter Replacement

Note For location of hardware and cables referred to in this procedure, see Figure 2.

Removal

1. Remove ac line cords and RF Section bottom and right side covers.
2. Disconnect cables ①: three from top of A6A9 Phase Lock assembly and two from A6A12 YTX Driver board.
3. Remove A6 RF Module PC cover plate by removing six screws ②.
4. Remove A6A9 assembly and A6A10, A6A11, and A6A12 PC boards from the A6 RF Module. It is not necessary to disconnect the two cables (green and yellow) from the front side of the A6A9 Phase Lock assembly.
5. Disconnect the following cables from the A6A3 Last Converter:

   2 (red) cable ③

   1 (brown) cable ④

   81 (gray/brown) cable ⑤
6. Remove two screws ⑦ and remove A6A3 Last Converter ⑥ from RF Module.

Installation

7. When installing the A6A3 Last Converter, push Last Converter board into A6A13 Motherboard PC connector, replace two screws ⑦ and reconnect cables disconnected in step 5.
8. Replace PC boards removed in step 4. Reconnect 5 (green) and 4 (yellow) cables to A6A9 Phase Lock if they were removed during removal of A6A3.
9. Replace and secure A6 RF Module PC board cover with six screws ②.
10. Reconnect cables ① to A6A9 Phase Lock and A6A12 YTX Driver. Cables are color-coded and color codes are marked on PC board cover.
11. Replace bottom and right side covers on RF Section. Reconnect ac line cords.

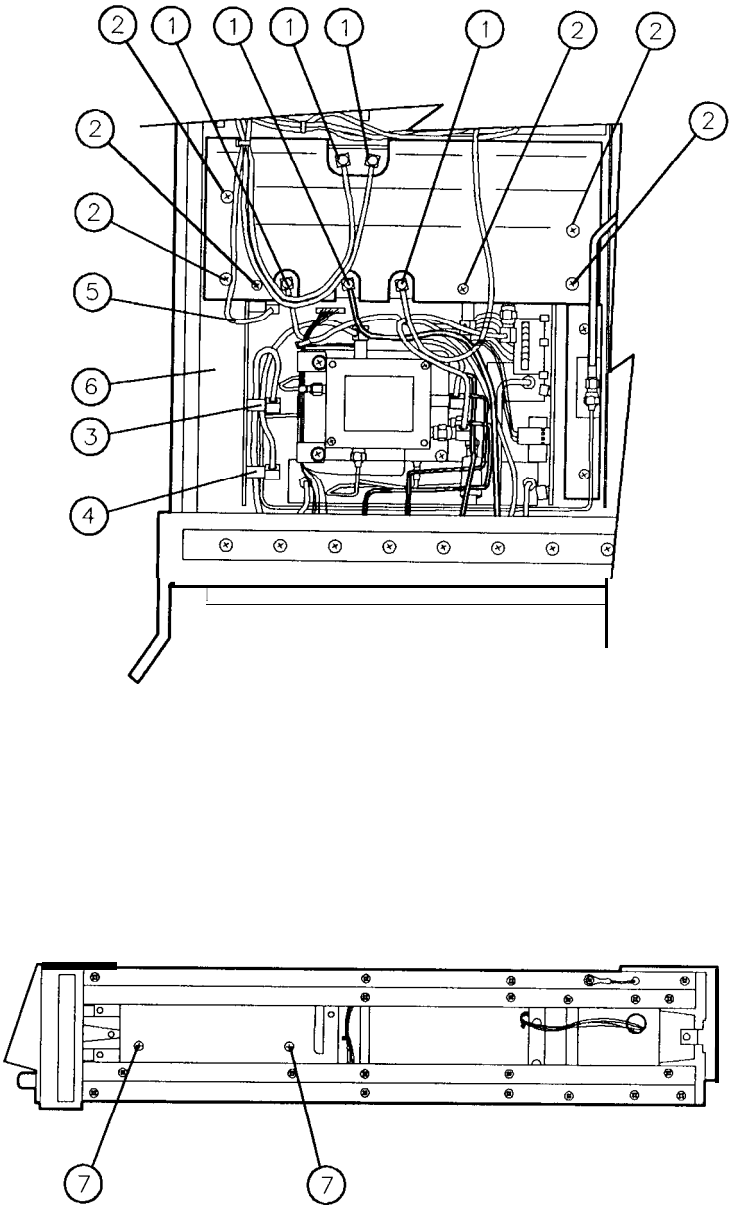

Figure 2. **A6A3** Last Converter Replacement

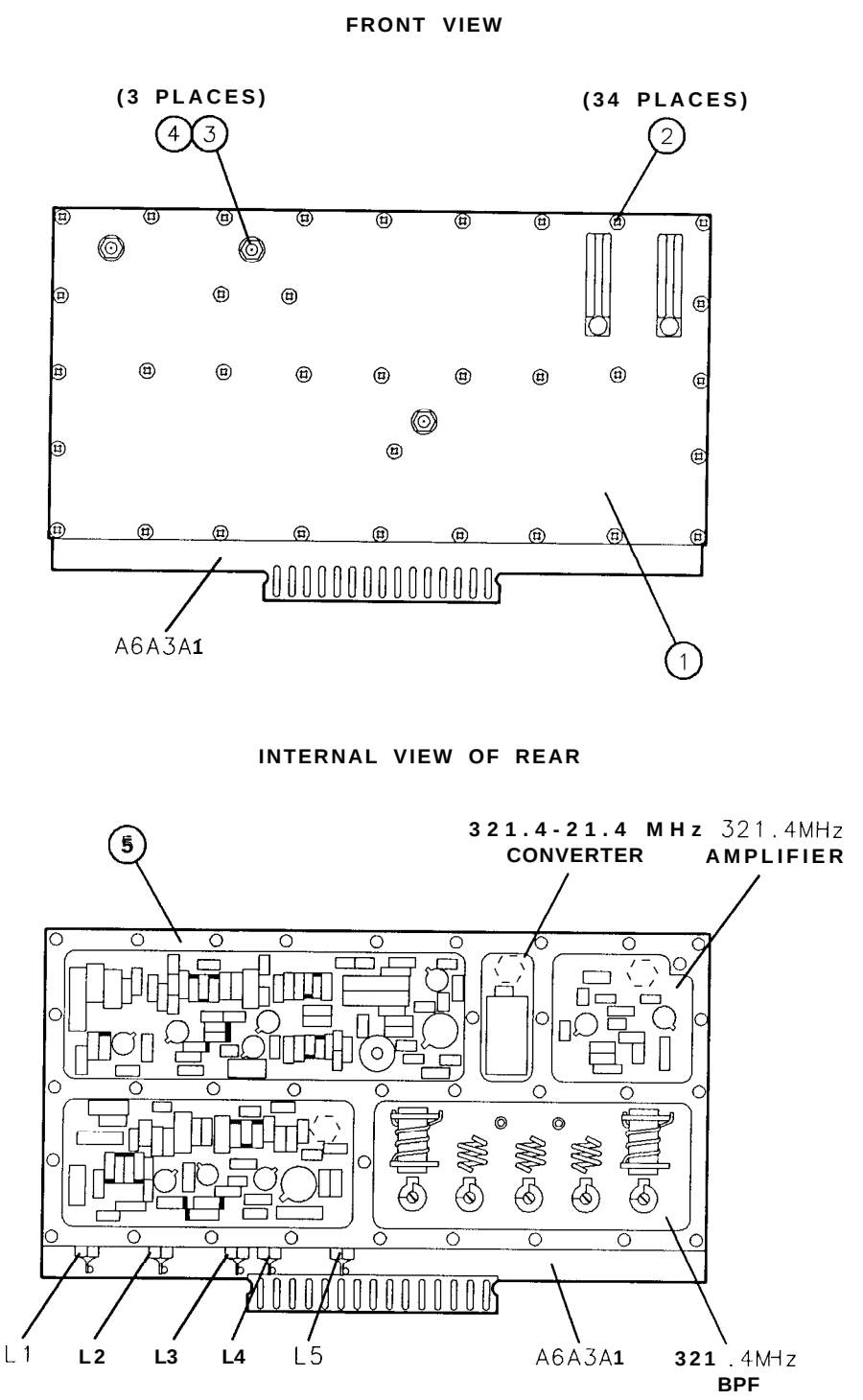

Figure 3. **A6A3** Last Converter Assembly, Parts Identification (1 of 2)

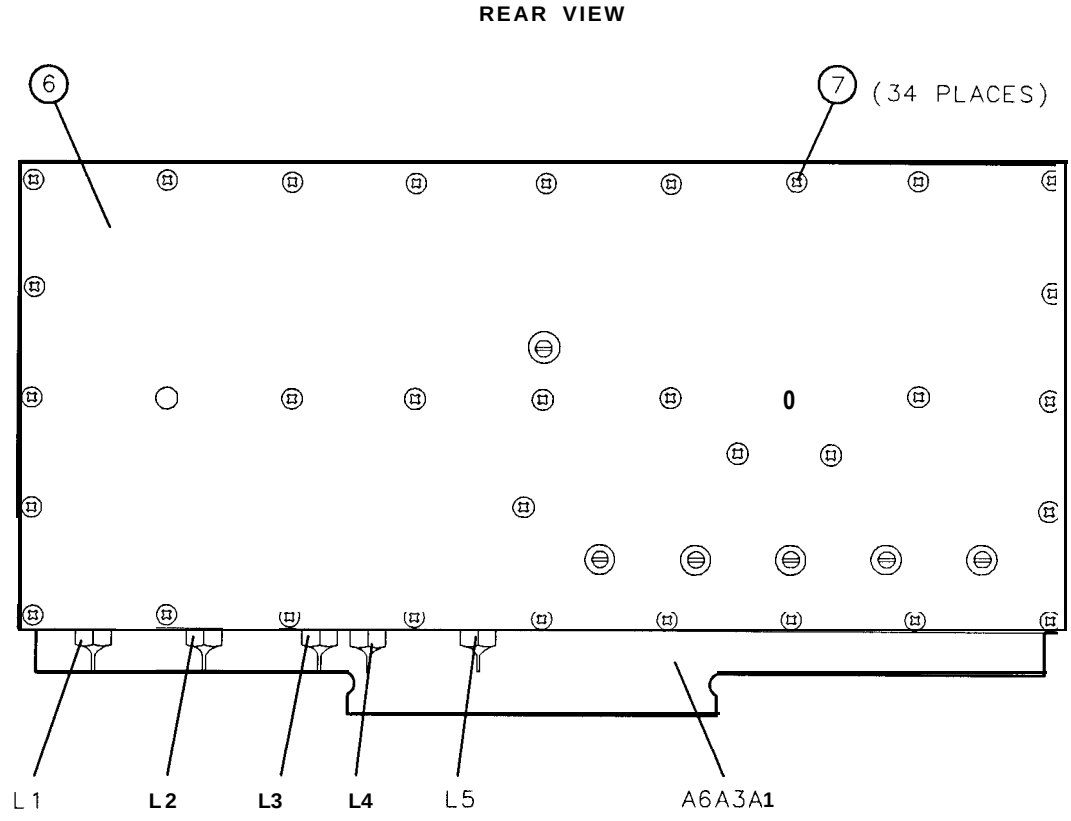

Item	HP Part Number	CD	Description	Mfr Code	Mfr Part Number
1	85660-20065	1	COVER, BOTTOM, LAST CONVERTER	28480	85660- 2006:
2	2200-0144	1	SCREW, MACH, 4-40, .375-IN LG, FLAT HD	28480	2200-0144
3	2950-0078	9	NUT, HEX, 10-32 (FOR J1, J2, AND J3)	28480	29504078
4	2190-0124	4	WASHER, LOCK, 10-32 (FOR 61, J2, AND J3)	28480	2190-0124
5	85660-20066	2	HOUSING, LAST CONVERTER	28480	85660-20066
6	85660-00009	1	COVER, TOP, LAST CONVERTER	28480	85660-00009
7	2200-0138	3	SCREW, MACH, 4-40, .188-IN LG, FLAT HD	28480	2200-0138

Figure 3. **A6A3** Last Converter Assembly, Parts Identification (2 of 2)

HP Part Number 85660-60003

A6A3 Last Converter

Reference Designation	HP Part Number	C D	Qty	Description	Mfr Code	Mfr Part Number
A6A3	35660-60003	1	1	LAST CONVERTER ASSEMBLY	28480	85660-60003
A6A3A1	35660-60002	0	1	LAST CONVERTER BOARD ASSEMBLY	28480	85660-60002
A6A3L1	3135-0002	8	1	FILTER-LOW PASS SOLDER-TERMS	33095	51-744-018
A6A3L2	3135-0002	8	1	FILTER-LOW PASS SOLDER-TERMS	33095	51-744-018
A6A3L3	9135-0002	8	1	FILTER-LOW PASS SOLDER-TERMS	33095	51-744-018
A6A3L4	9135-0002	8	1	FILTER-LOW PASS SOLDER-TERMS	33095	51-744-018
A6A3L5	9135-0002	8	1	FILTER-LOW PASS SOLDER-TERMS	33095	51-744-018
A6A3MP3	2200-0140	7	3	SCREW-MACH 4-40 .25-IN-LG 100 DEG	77250	
A6A3MP4	2200-0148	5	3	SCREW-MACH 4-40 .5-IN-LG 100 DEG	77250	
A6A3MP5	2950-0078	9	3	NUT-HEX-DBL-CHAM 10-32-THD .067-IN-THK	74163	500220
A6A3MP6	2190-0557	7	3	STAR WASHER .195 10	28480	2190-0557
A6A3MP7	35660-00009	1	1	COVER TOP	28480	85660-00009
A6A3MP8	35660-20066	2	1	HOUSING	28480	85660-20066
A6A3MP9	35660-20065	1	1	COVER BOTTOM	28480	85660-20065

**Indicates factory-selected value*

HP Part Number 85660-60002

A6A3A1 Last Converter

Reference Designation	HP Part Number	C D	Qty	Description	Mfr Code	Mfr Part Number
A6A3A1	85660-60002	0	1	BOARD ASSEMBLY LAST CONVERTER	28480	85660-60002
A6A3A1C1	0160-3877	5	1	CAPACITOR-FXD 100PF +-20% 200VDC CER	04222	SR202C101MAAH
A6A3A1C2	0160-3878	6	1	CAP-FXD 1000pF 100 V	04222	SR201C102MAAH
A6A3A1C3	0160-3877	5	1	CAPACITOR-FXD 100PF +-20% 200VDC CER	04222	SR202C101MAAH
A6A3A1C4	0160-3878	6	1	CAP-FXD 1000pF 100 V	04222	SR201C102MAAH
A6A3A1C5	0160-3878	6	1	CAP-FXD 1000pF 100 V	04222	SR201C102MAAH
A6A3A1C6	0160-3878	6	1	CAP-FXD 1000pF 100 V	04222	SR201C102MAAH
A6A3A1C7	0160-2246	0	1	CAP-FXD 3.6pF 500 V	52763	
A6A3A1C8	0121-0452	4	1	CAPACITOR-V TRMR-AIR 1.3-5.4PF 175V PC-M	74970	187-0103-028
A6A3A1C9	0121-0452	4	1	CAPACITOR-V TRMR-AIR 1.3-5.4PF 175V PC-M	74970	187-0103-028
A6A3A1C10	0121-0452	4	1	CAPACITOR-V TRMR-AIR 1.3-5.4PF 175V PC-M	74970	187-0103-028
A6A3A1C11	0121-0452	4	1	CAPACITOR-V TRMR-AIR 1.3-5.4PF 175V PC-M	74970	187-0103-028
A6A3A1C12	0121-0452	4	1	CAPACITOR-V TRMR-AIR 1.3-5.4PF 175V PC-N	74970	187-0103-028
A6A3A1C13	0160-0572	1	1	CAPACITOR-FXD 2200PF +-20% IOOVDC CER	04222	SR201C222MAAH
A6A3A1C14	0160-3879	7	1	CAPACITOR-FXD .01UF +-20% 100VDC CER	04222	SR201C103MAAH
A6A3A1C15	0160-3879	7	1	CAPACITOR-FXD .01UF +-20% IOOVDC CER	04222	SR201C103MAAH
A6A3A1C16	0160-3879	7	1	CAPACITOR-FXD .01UF +-20% 100VDC CER	04222	SR201C103MAAH
A6A3A1C17	0160-3878	6	1	CAP-FXD 1000pF 100 V	04222	SR201C102MAAH
A6A3A1C18	0160-3879	7	1	CAPACITOR-FXD .01UF +-20% 100VDC CER	04222	SR201C103MAAH
A6A3A1C19	0160-3879	7	1	CAPACITOR-FXD .01UF +-20% 100VDC CER	04222	SR201C103MAAH
A6A3A1C20	0160-3879	7	1	CAPACITOR-FXD .01UF +-20% IOOVDC CER	04222	SR201C103MAAH
A6A3A1C21	0160-3879	7	1	CAPACITOR-FXD .01UF +-20% 100VDC CER	04222	SR201C103MAAH
A6A3A1C22	0160-3653	5	1	CAPACITOR-FXD 33PF +-5% 200VDC CER 0+-30		RPE110C0G330J200V
A6A3A1C23	0121-0046	2	1	CAPACITOR-V TRMR-CER 9-35PF 200V PC-MTG	52763	304-322-573
A6A3A1C24	0160-3879	7	1	CAPACITOR-FXD .01UF +-20% IOOVDC CER	04222	SR201C103MAAH
A6A3A1C25	0160-3879	7	1	CAPACITOR-FXD .01UF +-20% 100VDC CER	04222	SR201C103MAAH
A6A3A1C26	0160-3879	7	1	CAPACITOR-FXD .01UF +-20% 100VDC CER	04222	SR201C103MAAH
A6A3A1C27	0160-3879	7	1	CAPACITOR-FXD .01UF +-20% 100VDC CER	04222	SR201C103MAAH
A6A3A1C28	0160-3879	7	1	CAPACITOR-FXD .01UF +-20% IOOVDC CER	04222	SR201C103MAAH
A6A3A1C29	0160-3879	7	1	CAPACITOR-FXD .01UF +-20% 100VDC CER	04222	SR201C103MAAH
A6A3A1C30	0160-3878	6	1	CAP-FXD 1000pF 100 V	04222	SR201C102MAAH
A6A3A1C31	0160-3878	6	1	CAP-FXD 1000pF 100 V	04222	SR201C102MAAH
A6A3A1C32	0160-3879	7	1	CAPACITOR-FXD .01UF +-20% 100VDC CER	04222	SR201C103MAAH
A6A3A1C33	0160-3879	7	1	CAPACITOR-FXD .01UF +-20% IOOVDC CER	04222	SR201C103MAAH
A6A3A1C34	0160-3879	7	1	CAPACITOR-FXD .01UF +-20% 100VDC CER	04222	SR201C103MAAH
A6A3A1C35	0160-3879	7	1	CAPACITOR-FXD .01UF +-20% 100VDC CER	04222	SR201C103MAAH
A6A3A1C36	0160-3879	7	1	CAPACITOR-FXD .01UF +-20% 100VDC CER	04222	SR201C103MAAH
A6A3A1C37	0160-3879	7	1	CAPACITOR-FXD .01UF +-20% IOOVDC CER	04222	SR201C103MAAH
A6A3A1C38	0160-3879	7	1	CAPACITOR-FXD .01UF +-20% 100VDC CER	04222	SR201C103MAAH
A6A3A1C39	0160-3879	7	1	CAPACITOR-FXD .01UF +-20% 100VDC CER	04222	SR201C103MAAH
A6A3A1C40	0160-3879	7	1	CAPACITOR-FXD .01UF +-20% 100VDC CER	04222	SR201C103MAAH
A6A3A1C41	0160-3879	7	1	CAPACITOR-FXD .01UF +-20% IOOVDC CER	04222	SR201C103MAAH
A6A3A1C42	0160-3879	7	1	CAPACITOR-FXD .01UF +-20% 100VDC CER	04222	SR201C103MAAH
A6A3A1C43	0160-3878	6	1	CAP-FXD 1000pF 100 V	04222	SR201C102MAAH
A6A3A1C44	0160-3456	6	1	CAPACITOR-FXD 1000PF +-10% 1KVDC CER		808-542 X5E 102K
A6A3A1C45	0160-3879	7	1	CAPACITOR-FXD .01UF +-20% 100VDC CER	04222	SR201C103MAAH
A6A3A1C46	0160-4892	6	1	CAP-FXD 1uF 25 V	56289	2C37Z5U105M025C

**Indicates facto y-selected value*

HP Part Number 85660-60002

A6A3A1 Last Converter

Reference Designation	HP Part Number	CD	Qty	Description	Mfr Code	Mfr Part Number
A6A3A1C47	0160-3879	7	1	CAPACITOR-FXD .01UF +-20% 100VDC CER	04222	SR201C103MAAH
A6A3A1C48	0160-3879	7	1	CAPACITOR-FXD .01UF +-20% 100VDC CER	04222	SR201C103MAAH
A6A3A1C49	0160-3879	7	1	CAPACITOR-FXD .01UF +-20% 100VDC CER	04222	SR201C103MAAH
A6A3A1C50	0160-4892	6	1	CAP-FXD 1uF 25 V	56289	2C37Z5U105M025C
A6A3A1C51	0160-4084	8	1	CAP-FXD 0.1uF 50 V	56289	1C20X7R104M050B
A6A3A1C52	0160-3879	7	1	CAPACITOR-FXD .01UF +-20% IOOVDC CER	04222	SR201C103MAAH
A6A3A1C53	0160-3879	7	1	CAPACITOR-FXD .01UF +-20% 100VDC CER	04222	SR201C103MAAH
A6A3A1C54	0160-3879	7	1	CAPACITOR-FXD .01UF +-20% IOOVDC CER	04222	SR201C103MAAH
A6A3A1CR1	1901-1070	0	1	DIODE-PIN 110V	28480	
A6A3A1CR2	1901-1070	9	1	DIODE-PIN 110V	28480	
A6A3A1CR3	1901-1070	0	1	DIODE-PIN 110V	28480	
A6A3A1CR4	1901-1070	0	1	DIODE-PIN 110V	28480	
A6A3A1CR5	1901-1070	9	1	DIODE-PIN 110V	28480	
A6A3A1CR6	1901-1070	0	1	DIODE-PIN 110V	28480	
A6A3A1CR7	1901-1070	0	1	DIODE-PIN 110V	28480	
A6A3A1CR8	1901-1070	0	1	DIODE-PIN 110V	28480	
A6A3A1CR9	1901-1070	9	1	DIODE-PIN 110V	28480	
A6A3A1CR10	1901-1070	9	1	DIODE-PIN 110V	28480	
A6A3A1CR11	1901-1070	9	1	DIODE-PIN 110V	28480	
A6A3A1CR12	1901-1070	0	1	DIODE-PIN 110V	28480	
A6A3A1CR13	1901-1070	0	1	DIODE-PIN 110V	28480	
A6A3A1CR14	1901-1070	9	1	DIODE-PIN 110V	28480	
A6A3A1CR15	1901-1070	0	1	DIODE-PIN 110V	28480	
A6A3A1CR16	1901-1070	0	1	DIODE-PIN 110V	28480	
A6A3A1CR17	1901-1070	0	1	DIODE-PIN 110V	28480	
A6A3A1CR18	1901-1070	0	1	DIODE-PIN 110V	28480	
A6A3A1CR19	1901-1070	0	1	DIODE-PIN 110V	28480	
A6A3A1CR20	1901-1070	0	1	DIODE-PIN 110V	28480	
A6A3A1E1	8151-0013	4	1	WIRE 22AWG 1x22 (ATTACHED To A6A3L1)	92194	298
A6A3A1E2	8151-0013	4	1	WIRE 22AWG 1x22 (ATTACHED To A6A3L1)	92194	298
A6A3A1E3	8151-0013	4	1	WIRE 22AWG 1X22 (ATTACHED TO A6A3L2)	92194	298
A6A3A1E4	8151-0013	4	1	WIRE 22AWG 1X22 (ATTACHED TO A6A3L2)	92194	298
A6A3A1E5	8151-0013	4	1	WIRE 22AWG 1x22 (ATTACHED To A6A3L3)	92194	298
A6A3A1E6	8151-0013	4	1	WIRE 22AWG 1X22 (ATTACHED TO A6A3L3)	92194	298
A6A3A1E7	3151-0013	4	1	WIRE 22AWG 1x22 (ATTACHED To A6A3L4)	92194	298
A6A3A1E8	3151-0013	4	1	JIRE 22AWG 1X22 (ATTACHED TO A6A3L4)	92194	298
A6A3A1E9	3151-0013	4	1	WIRE 22AWG 1x22 (ATTACHED To A6A3L5)	92194	298
A6A3A1E10	3151-0013	4	1	WIRE 22AWG 1x22 (ATTACHED To A6A3L5)	92194	298
A6A3A1E11	3170-0029	3	1	:ORE-SHIELDING BEAD	02114	56-590-65A2/4A
A6A3A1E12	3170-0029	3	1	CORE-SHIELDING BEAD	02114	56-590-65A2/4A
A6A3A1E13	3170-0029	3	1	:ORE-SHIELDING BEAD	02114	56-590-65A2/4A
A6A3A1E14	3170-0029	3	1	:ORE-SHIELDING BEAD	02114	56-590-65A2/4A
A6A3A1E15	3170-0029	3	1	:ORE-SHIELDING BEAD	02114	56-590-65A2/4A
A6A3A1E16	3170-0029	3	1	:ORE-SHIELDING BEAD	02114	56-590-65A2/4A
A6A3A1J1	1250-1611	3	1	CONNECTOR-RF SMB M PC 50-OHM	98291	51-051-0289
A6A3A1J2	1250-1611	3	1	:ONNECTOR-RF SMB M PC 50-OHM	98291	51-051-0289
A6A3A1J3	1250-1611	3	1	:ONNECTOR-RF SMB M PC 50-OHM	98291	51-051-0289
A6A3A1L1	9100-2255	4	1	INDUCTOR RF-CH-MLD 470NH +-10% .105D-INX	24226	10M470K

Indicates factory-selected value

HP Part Number 85660-60002

A6A3A1 Last Converter

Reference Designation	HP Part Number	CD	Qty	Description	Mfr Code	Mfr Part Number
A6A3A1L2	9100-2891	4	1	INDUCTOR RF-CH-MLD 50NH +-10% .105D-INX.	24226	10M050K-1
A6A3A1L3	9100-2255	4	1	INDUCTOR RF-CH-MLD 470NH +-10% .105D-INX	24226	10M470K
A6A3A1L4	85660-80002	2	1	COIL TAPPED	28480	85660-80002
A6A3A1L5	85660-80001	1	1	COIL TAPPED	28480	85660-80001
A6A3A1L6	85660-80001	1	1	COIL TAPPED	28480	85660-80001
A6A3A1L7	85660-80001	1	1	COIL TAPPED	28480	85660-80001
A6A3A1L8	85660-80002	2	1	COIL TAPPED	28480	85660-80002
A6A3A1L9	9100-2247	4	1	INDUCTOR RF-CH-MLD 100NH +-10% .105D-INX	24226	10M100K
A6A3A1L10	9140-0144	0	1	INDUCTOR RF-CH-MLD 4.7UH +-10% .105D-INX	99800	1025-36
A6A3A1L12	9100-1623	8	1	INDUCTOR RF-CH-MLD 27UH +-5% .166D-INX.3	99800	1537-48
A6A3A1L13	9100-1623	8	1	INDUCTOR RF-CH-MLD 27UH +-5% .166D-INX.3	99800	1537-48
A6A3A1L18	9100-1623	8	1	INDUCTOR RF-CH-MLD 27UH +-5% .166D-INX.3	99800	1537-48
A6A3A1L19	9100-1623	8	1	INDUCTOR RF-CH-MLD 27UH +-5% .166D-INX.3	99800	1537-48
A6A3A1L21	9100-1623	8	1	INDUCTOR RF-CH-MLD 27UH +-5% .166D-INX.3	99800	1537-48
A6A3A1L22	9100-1623	8	1	INDUCTOR RF-CH-MLD 27UH +-5% .166D-INX.3	99800	1537-48
A6A3A1L23	9100-1623	8	1	INDUCTOR RF-CH-MLD 27UH +-5% .166D-INX.3	99800	1537-48
A6A3A1L24	9100-1623	8	1	INDUCTOR RF-CH-MLD 27UH +-5% .166D-INX.3	99800	1537-48
A6A3A1MP1				NOT ASSIGNED		
A6A3A1MP2	0380-1672	0	1	STANDOFF-RVT-ON .608-IN-LG 4-40-THD	06540	
A6A3A1MP3	1205-0226	9	1	HEAT SINK SGL TO-5/TO-39-CS	13103	11158
A6A3A1Q1	1854-0477	7	1	TRANSISTOR NPN 2N2222A SI TO-18 PD=500MW	04713	2N2222A
A6A3A1Q2	1854-0345	8	1	TRANSISTOR NPN 2N5179 SI TO-72 PD=200MW	04713	2N5179
A6A3A1Q3	1854-0345	8	1	TRANSISTOR NPN 2N5179 SI TO-72 PD=200MW	04713	2N5179
A6A3A1Q4	1854-0345	8	1	TRANSISTOR NPN 2N5179 SI TO-72 PD=200MW	04713	2N5179
A6A3A1Q5	1853-0281	9	1	TRANSISTOR PNP 2N2907A SI TO-18 PD=400MW	04713	2N2907A
A6A3A1Q6	1854-0378	7	1	TRANSISTOR NPN 2N5109 SI TO-39 PD=800MW	04713	2N5109
A6A3A1Q7	1853-0281	9	1	TRANSISTOR PNP 2N2907A SI TO-18 PD=400MW	04713	2N2907A
A6A3A1Q8	1854-0686	0	1	TRANSISTOR NPN SI TO-72 PD=200MW FT=4GHZ	25403	
A6A3A1Q9	1854-0345	8	1	TRANSISTOR NPN 2N5179 SI TO-72 PD=200MW	04713	215179
A6A3A1Q10	1854-0345	8	1	TRANSISTOR NPN 2N5179 SI TO-72 PD=200MW	04713	215179
A6A3A1Q11	1854-0345	8	1	TRANSISTOR NPN 2N5179 SI TO-72 PD=200MW	04713	215179
A6A3A1Q12	1854-0378	7	1	TRANSISTOR NPN 2N5109 SI TO-39 PD=800MW	04713	2N5109
A6A3A1R1	0757-0438	3	1	RESISTOR 5.11K +-1% .125W TF TC=0+-100	19701	SFR25H
A6A3A1R2	0757-0438	3	1	RESISTOR 5.11K +-1% .125W TF TC=0+-100	19701	SFR25H
A6A3A1R3	0757-0418	3	1	RESISTOR 619 +-1% .125W TF TC=0+-100	19701	SFR25H
A6A3A1R4	0698-3154	3	1	RESISTOR 4.221: 1% .125W TF TC=0+-100	19701	SFR25H
A6A3A1R5	0698-8818	3	1	RESISTOR 3.16 +-1% .125W TF TC=0+-100	91637	CMF-55-1
A6A3A1R6	0698-0085	3	1	RESISTOR 2.61K 1% .125W TF TC=0+-100	19701	SFR25H
A6A3A1R7	0757-0440	7	1	RESISTOR 7.5K +-1% .125W TF TC=0+-100	19701	SFR25H
A6A3A1R8	0698-3431	3	1	RESISTOR 23.7 1% .125W TF TC=0+-100	19701	SFR25H
A6A3A1R9	0757-0198	2	1	RESISTOR 100 +-1% .5W TF TC=0+-100	19701	5053R
A6A3A1R10	0757-0419	3	1	RESISTOR 681 +-1% .125W TF TC=0+-100	19701	SFR25H
A6A3A1R11	3757-0428	1	1	RESISTOR 1.62K +-1% .125W TF TC=0+-100	19701	SFR25H
A6A3A1R12	3757-0278	9	1	RESISTOR 1.78K +-1% .125W TF TC=0+-100	19701	SFR25H
A6A3A1R13	0757-0280	3	1	RESISTOR 1K +-1% .125W TF TC=0+-100	19701	SFR25H
A6A3A1R14	0757-0438	3	1	RESISTOR 5.11K +-1% .125W TF TC=0+-100	19701	SFR25H
A6A3A1R15	3757-0438	3	1	RESISTOR 5.11K +-1% .125W TF TC=0+-100	19701	SFR25H

**Indicates factory-selected value*

HP Part Number 85660-60002

A6A3A1 Last Converter

Reference Designation	HP Part Number	C D	Qty	Description	Mfr Code	Mfr Part Number
A6A3A1R16	)757-0200	7	1	RESISTOR 5.621: +-1% .125W TF TC=O+-100	19701	SFR25H
A6A3A1R17	1757-0447	4	1	RESISTOR 16.2K +-1% .125W TF TC=O+-100	19701	SFR25H
A6A3A1R18	)757-0418	9	1	RESISTOR 619 +-1% .125W TF TC=O+-100	19701	SFR25H
A6A3A1R19	)698-3441	8	1	RESISTOR 215 1% .125W TF TC=O+-100	19701	SFR25H
A6A3A1R20	)698-3132	4	1	RESISTOR 261 1% .125W TF TC=O+-100	19701	SFR25H
A6A3A1R21	)698-3155	1	1	RESISTOR 4.641: 1% .125W TF TC=O+-100	19701	SFR25H
A6A3A1R22	)698-3446	3	1	RESISTOR 383 1% .125W TF TC=O+-100	19701	SFR25H
A6A3A1R23	)698-3162	0	1	RESISTOR 46.41: 1% .125W TF TC=O+-100	19701	SFR25H
A6A3A1R24	)757-0416	7	1	RESISTOR 511 +-1% .125W TF TC=O+-100	19701	SFR25H
A6A3A1R25	)757-0416	7	1	RESISTOR 511 +-1% .125W TF TC=O+-100	19701	SFR25H
A6A3A1R26	)757-0438	3	1	RESISTOR 5.11K +-1% .125W TF TC=O+-100	19701	SFR25H
A6A3A1R27	)698-3449	6	1	RESISTOR 28.71: 1% .125W TF TC=O+-100	19701	SFR25H
A6A3A1R28	)757-0278	9	1	RESISTOR 1.78K +-1% .125W TF TC=O+-100	19701	SFR25H
A6A3A1R29	)757-0280	3	1	RESISTOR 1K +-1% .125W TF TC=O+-100	19701	SFR25H
A6A3A1R30	)698-3132	4	1	RESISTOR 261 1% .125W TF TC=O+-100	19701	SFR25H
A6A3A1R31	)698-3155	1	1	RESISTOR 4.641: 1% .125W TF TC=O+-100	19701	SFR25H
A6A3A1R32	)757-0418	9	1	RESISTOR 619 +-1% .125W TF TC=O+-100	19701	SFR25H
A6A3A1R33	)698-3162	0	1	RESISTOR 46.41: 1% .125W TF TC=O+-100	19701	SFR25H
A6A3A1R34	)757-0417	8	1	RESISTOR 562 +-1% .125W TF TC=O+-100	19701	SFR25H
A6A3A1R35	)698-0083	8	1	RESISTOR 1.96K 1% .125W TF TC=O+-100	19701	SFR25H
A6A3A1R36	)698-3439	4	1	RESISTOR 178 1% .125W TF TC=O+-100	19701	SFR25H
A6A3A1R37	)757-0394	0	1	RESISTOR 51.1 +-1% .125W TF TC=O+-100	19701	SFR25H
A6A3A1R38	)757-0814	9	1	RESISTOR 511 +-1% .5W TF TC=O+-100	19701	5053R
A6A3A1R39	)757-0442	9	1	RESISTOR 10K +-1% .125W TF TC=O+-100	19701	SFR25H
A6A3A1R40	)757-0442	9	1	RESISTOR 10K +-1% .125W TF TC=O+-100	19701	SFR25H
A6A3A1R41	)757-0798	8	1	RESISTOR 110 +-1% .5W TF TC=O+-100	19701	5053R
A6A3A1R42	)757-0438	3	1	RESISTOR 5.11K +-1% .125W TF TC=O+-100	19701	SFR25H
A6A3A1R43	)757-0280	3	1	RESISTOR 1K +-1% .125W TF TC=O+-100	19701	SFR25H
A6A3A1R44	)757-0442	9	1	RESISTOR 10K +-1% .125W TF TC=O+-100	19701	SFR25H
A6A3A1R45	)698-4037	0	1	RESISTOR 46.4 1% .125W TF TC=O+-100	19701	SFR25H
A6A3A1R46	)757-0394	0	1	RESISTOR 51.1 +-1% .125W TF TC=O+-100	19701	SFR25H
A6A3A1U1	)955-0084	5	1	U-WAVE MIXER 500 MHZ MAX	15542	SRA-1H-32
A6A3A1VR1	.902-0625	0	1	DIODE-ZNR 1N829 6.2V 5% DO-35 PD=.25W TC	04713	1N829

Indicates facto y-selected value

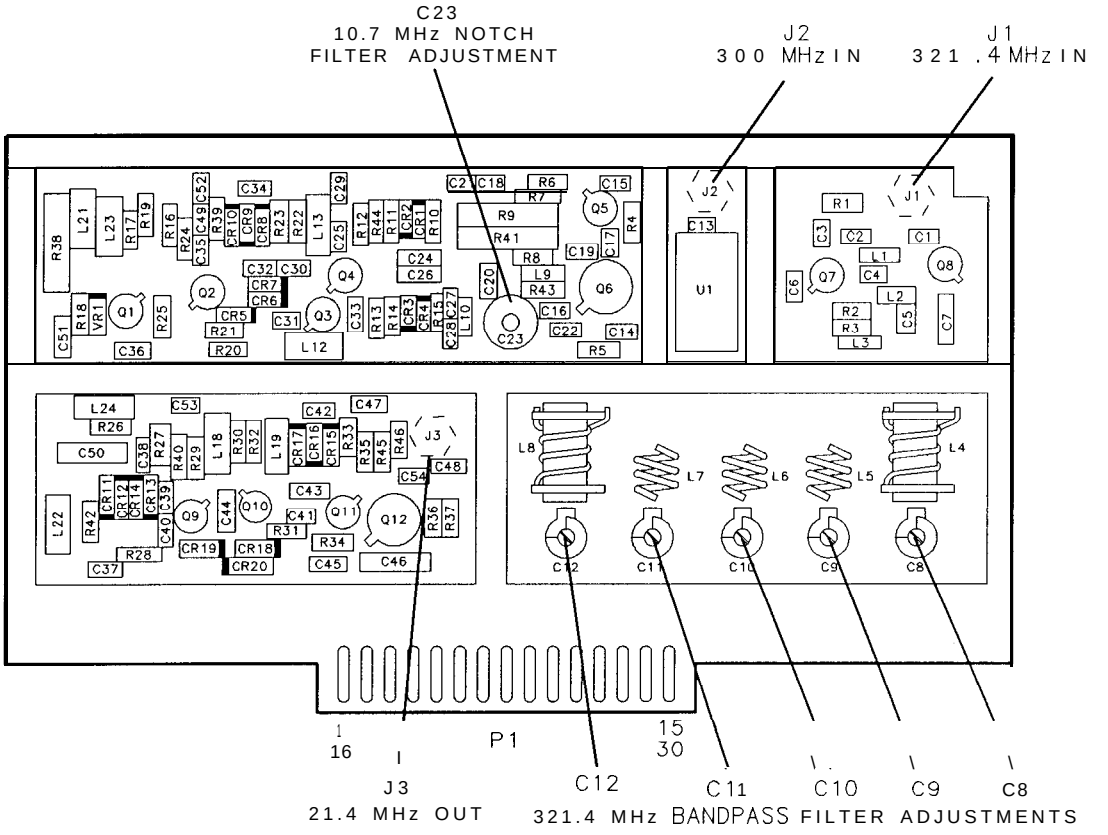

A6A3A1 Last Converter Board Component Locations, 85660-60002

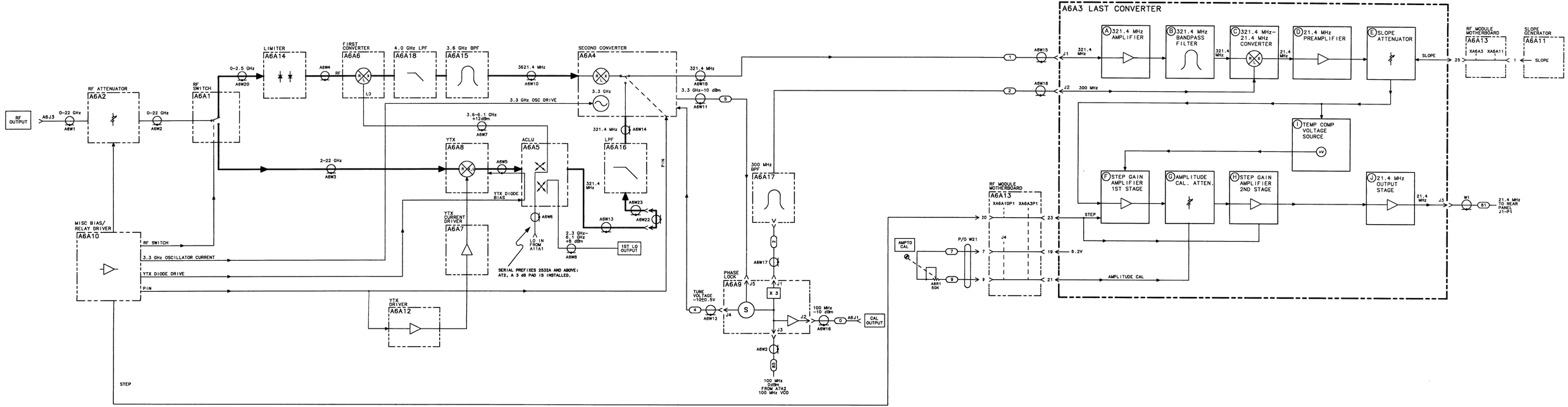

A6A3 LAST CONVERTER, BLOCK DIAGRAM

A6A3 LAST CONVERTER ASSEMBLY
85660-60003
(SERIAL PREFIX: 2410A)

A6A3A1 LAST CONVERTER BOARD
85660-60002

CABLE 2, A6W18 300 MHZ FROM A6A17 300 MHz BPF — J2
CABLE 1, A6W15 321.4 MHz FROM A6A4 SECOND CONVERTER — J1

P1

PIN	SIGNAL	TO/FROM	FUNCTION BLOCK
1	GND		K
16	NC		
2	GND		K
17	+20V		K
3	GND		K
18	NC		
4	GND	A6R1	K
19	+6.2V		K
5	GND		K
20	NC		
6	GND	A6R1	K
21	AMPLITUDE CAL		G
7	GND		K
22	NC		
8	GND	A6A10P1-20	K
23	STEP		F H
9	GND		K
24	NC		
10	GND	A6A11P1-1	K
25	SLOPE		E
11	GND		K
26	NC		
12	GND		K
27	NC		
13	GND		K
28	NC		
14	GND		K
29	NC		
15	GND		K
30	NC		

(A) 321.4 MHz AMPLIFIER

(B) 321.4 MHz BANDPASS FILTER — SEE NOTE 3

(C) 321.4–21.4 MHz CONVERTER — MIXER

(D) 21.4 MHz PREAMPLIFIER

(E) SLOPE ATTENUATOR

(I) TEMPERATURE COMPENSATION

(K) POWER SUPPLIES

(F) STEP GAIN AMPLIFIER # 1

(G) AMPLITUDE CAL ATTENUATOR

(H) STEP GAIN AMPLIFIER # 2

(J) 21.4 MHz OUTPUT

P1-19(OUT) +6.2V — P1-17 +20V — P1-1,15 GND — P1-23 STEP — P1-21 AMPLITUDE CAL — P1-25 SLOPE

SHIELD

J3 — CABLE R1 W1 21.4 MHz TO IF DISPLAY SECTION VIA REAR PANEL J1P1

NOTES:

1. REFERENCE DESIGNATORS WITHIN THIS ASSEMBLY ARE ABBREVIATED. FOR COMPLETE REFERENCE DESIGNATION, PREFIX ABBREVIATION WITH ASSEMBLY DESIGNATION.
2. UNLESS OTHERWISE INDICATED: RESISTANCE IS IN OHMS (Ω) CAPACITANCE IS IN MICROFARADS (μF) INDUCTANCE IS IN MICROHENRIES (μH)
3. CAPACITORS FORMED BY PC BOARD TRACES.
4. UNLESS OTHERWISE INDICATED: SIGNALS ENTER AT LEFT SIDE AND EXIT AT RIGHT SIDE OF FUNCTION BLOCKS.

A6A7/A6A5/A6A8

A6A7 YIG-Tuned Mixer (YTX) Current Driver, Circuit Description

The YTX Current Driver has three functions:

1. Provides the output stage for the A6A8 YTX coil.
2. Provides filter circuitry for the YTX.
3. Provides control circuitry for the YTX heater.

YTX Drive Output Ⓑ

The YTX drive output consists of Q5, Q6, R14 to R17, VR4, and CR3. Q5 and Q6 form a darlington transistor driven by the A6A12 YTX Driver. R14 to R17 are four 100Ω ten-watt resistors connected in parallel to form a 25Ω resistor which is used to sense the current in the YTX coil. This sense signal is fed back to the YTX Driver. Four resistors are used for power handling capability and temperature stability. VR4 and CR3 limit the flyback voltage produced across the YTX coil during scan reset and prevent breakdown of Q5 and Q6.

Filter Capacitor Drive Ⓐ

When the spectrum analyzer is set to narrow spans and narrow resolution bandwidth, hum and noise in the YTX drive circuitry which FMs the YTX can introduce phase noise and line frequency sidebands onto a displayed signal. To prevent this occurrence, a large filter capacitor, A6A7C1, is connected across the YTX coil by switch Q8 whenever the resolution bandwidth is 100 Hz or less.

Q8 is controlled from A6A11 Slope Generator through Q2, Q3, and Q4. When the resolution bandwidth is 100 Hz or less, the filter capacitor is connected before the start of a scan and disconnected at the end of a scan so that the scan reset and hysteresis correction can be performed.

YTX Heater Control Ⓒ

The YTX heater control is a feedback circuit designed to maintain the center support of the YTX at a constant 75°C, as the ambient temperature ranges from 0“ to 55°C. The green LED, DS1, indicates that current is flowing properly in the heater. Red LED, DS2, indicates the circuit is saturated, putting maximum power into the heater.

The heater ring of the YTX has a 450Ω thin-film heater resistor, and a thermal sensor with a positive temperature coefficient. The resistance versus temperature characteristics of the thermal sensor are shown in Figure 1.

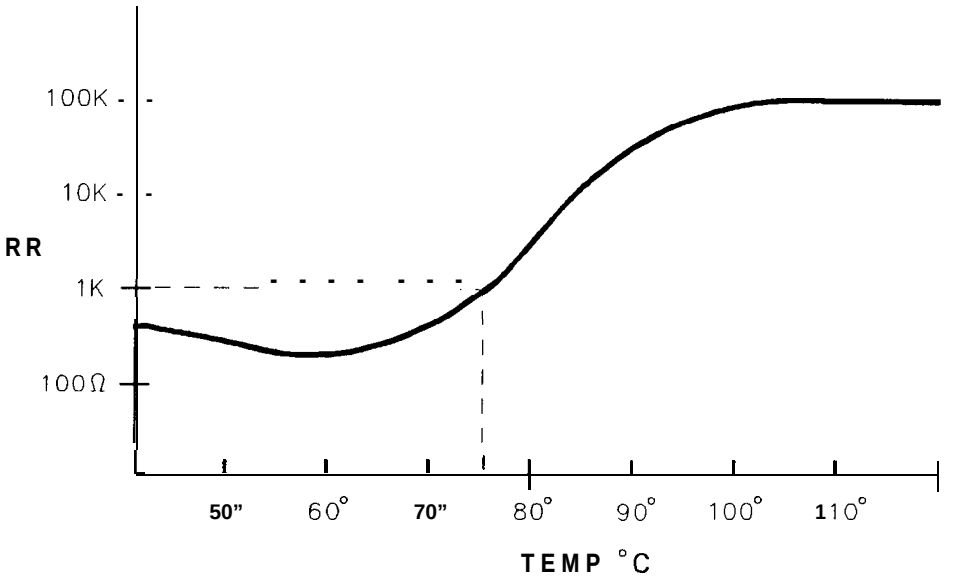

Figure 1. YTX Thermal Sensor Resistance versus Temperature Characteristics

Op-amp U1, with R2, R3, R4, Q1, and Q7 forms an amplifier with a gain of about 127. In addition, R2 and R3 set a reference voltage at the negative input of the amplifier. Darlington Q1 and Q7 is able to provide the large currents required to heat the heater resistor to 75°C. VR2 and R5 offset the op-amp output voltage to be within range of the output stage (0 to -40 V). CR1 protects the op-amp input.

The circuit operates as follows: If the heater ring is cool (such as at turn-on), the divider formed by R1 and the sensor (described above) outputs a voltage that is less than the reference at the minus input to the amplifier. This causes the amplifier output to swing negative, thus drawing more current through the heater resistor, heating up the sensor, causing it to increase its resistance. This raises the voltage at the R1/sensor divider output until it exactly equals that of the reference divider R2/R3. In general, small temperature errors are manifested as a small voltage between pins 2 and 3 of the op-amp (its input). This error is amplified and applied to the heater resistor with the appropriate sign to eliminate the error.

A6A8 YIG-Tuned Mixer (YTX), A6A5 Amplifier/Coupler/Load Unit (ACLU), Circuit Description

The YTX consists of a three-pole tunable bandpass filter and a single-diode microwave harmonic mixer. The 2 to 6 GHz local oscillator (LO) signal enters the ACLU, and is amplified and coupled into the YTX to turn its diode on and off at the LO rate. The diode conduction angle is adjusted with DC diode bias to be optimum for the harmonic of the LO being used. The incoming microwave signal passes through the bandpass filter, through the mixer diode, as the diode switches on and off, and into the precision 50Ω load of the ACLU. The IF signal at 321.4 MHz travels down the same line as the higher frequency LO, but a matching network couples the 321.4 MHz IF signal to the ACLU output while blocking the LO.

The three-pole filter has two purposes:

1. To reject the image response of the mixer 642.8 MHz away from the desired signal.
2. To reject the LO signal that would otherwise come out of the mixer's microwave input port, and out of the instrument front panel.

Handling the YIG-Tuned Mixer

Caution



The YIG-Tuned Mixer (YTX) contains an extremely small and sensitive diode. A reverse voltage in excess of 3 V may damage it. It is connected directly to the center conductor of the LO/IF connector, and is especially susceptible to blowout from electrostatic discharge. Before connecting any coaxial cable to the YTX, connect the YTX BIAS pin to ground, discharge the coaxial cable by connecting the center conductor to ground (YTX body), then simultaneously touch both to chassis ground or the YTX package. It is recommended that the other end of the cable be connected first before going through this procedure.

Once the cable from the YTX to the ACLU is properly installed, the BIAS pin of the ACLU is directly connected to the YTX diode. Therefore, treat the BIAS pin with extreme caution, especially avoiding electrostatic discharge. As a general rule, connect all devices to the chassis before connecting to or touching the BIAS pin on the ACLU.

A6A5 Amplifier/Coupler/Load Unit (ACLU) Replacement

Note For location of hardware and cables referred to in this procedure, see Figure 2.

Removal

1. Remove ac line cords and RF Section bottom cover.
2. Disconnect connectors ①, ④ and ⑧, single-pin connector ②, and double-pin connector ③ from Second Converter.
3. Disconnect the remaining cables from Second Converter:
   - 1 (brown) cable from .321 OUT ⑦
   - 4 (yellow) cable from TUNE ⑨
4. Remove ACLU cover-plate by removing four screws ⑤ as shown in View A.
5. Disconnect five connectors ①⓪, three 92 (white/red) single-pin connectors ①①, and one 8 (gray) single-pin connector ①②.
6. Release ACLU by removing two screws ①③ shown in View B.

Installation

7. Secure new ACLU on mounting bracket with two screws ①③, and reconnect the cables and wires removed in step 5.
8. Replace ACLU cover-plate with four screws ⑤ shown in View A.
9. Reconnect the following cables to Second Converter: (Refer to View A.)
   - 1 (brown) cable to .321 OUT ⑦
   - 1 (brown) cable to .321 IN ⑧
   - 4 (yellow) cable to TUNE ⑨
10. Replace bottom cover and ac line cords.

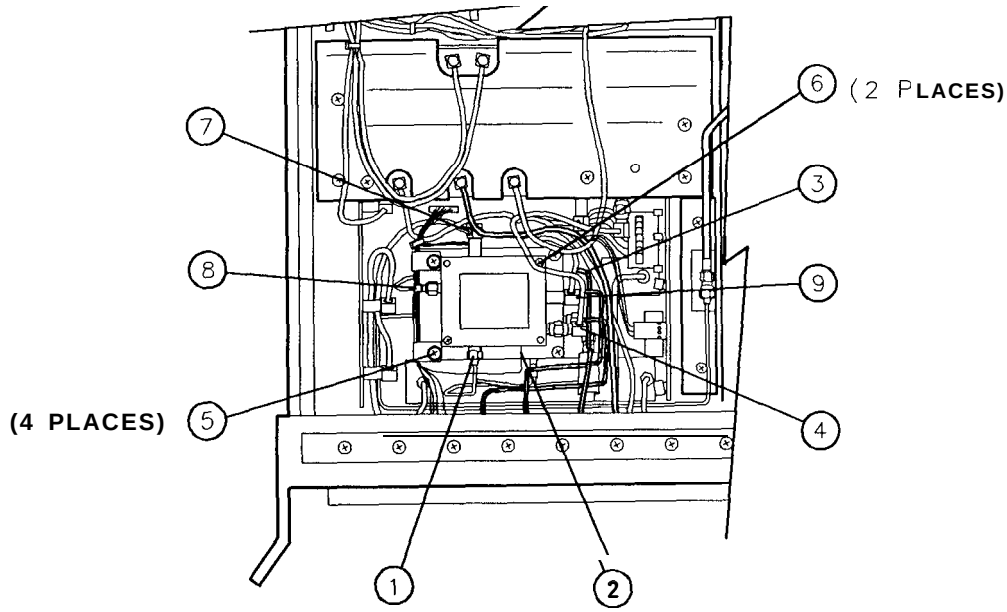

VIEW A

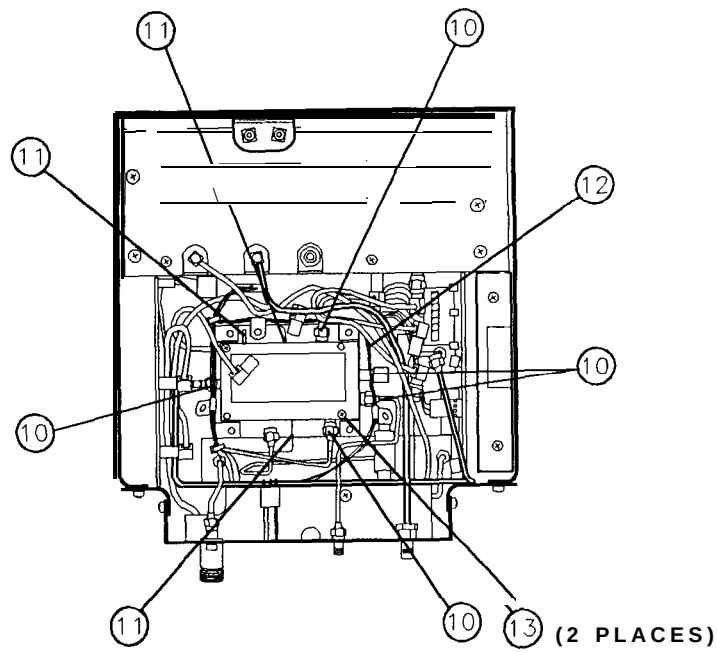

VIEW B

Figure 2. **A6A5** ACLU Replacement

A6A7 YTX Current Driver Replacement

Note For location of hardware and cables referred to in this procedure, see Figure 3.

Removal

1. Remove ac line cords and RF Section bottom cover.
2. Disconnect 5-pin connector ② and ribbon cable ③ from A6A7.
3. Remove two screws ④ and remove A6A7 from RF Module.

Installation

4. Place A6A7 in RF Module and replace two screws ④.
5. Reconnect 5-pin connector ② and ribbon cable ③ to A6A7.
6. Replace bottom cover on RF Section and reconnect ac line cords.

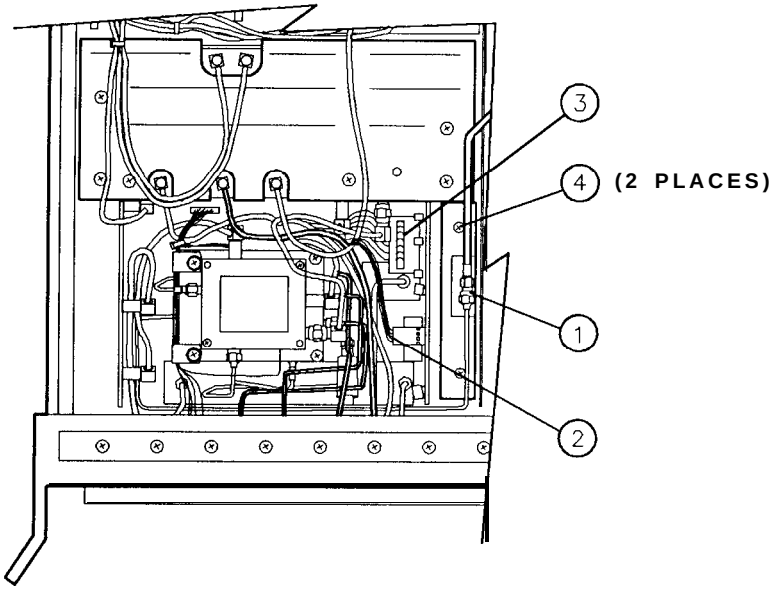

Figure 3. **A6A7** YTX Current Driver Replacement

A6A8 YTX Replacement

Note For location of hardware and cables referred to in this procedure, see Figure 4.

Removal

1. Remove ac line cords, separate instrument sections, and remove top and bottom covers from RF Section.
2. Disconnect cable ① between All YTO Loop and RF Module.
3. Remove five cables from RF Module PC boards; three from A6A9 Phase Lock and two from A6A12 YTX Driver.
4. Remove RF Module PC board cover by removing six screws ②.
5. Remove A6A9 assembly and A6A10, A6A11, and A6A12 PC boards.
6. Disconnect 4 (yellow) cable and 5 (green) cable from 2nd Converter to release A6A9 assembly.
7. Remove ribbon cable ③ between A6A7 YTX Current Driver and motherboard.
8. Disconnect 5-pin connector ④ from A6A7 and remove A6A7 by removing two screws ⑤.

Caution The A6A8 YTX contains an extremely sensitive diode located inside the LO/IF connector. This diode is highly susceptible to blow-out from static discharge. Be very careful when handling the YTX to avoid damaging this diode.

9. Disconnect all cables from A6A8 YTX.
10. Disconnect bus cable ⑥ from motherboard.
11. Remove two screws ⑦ holding YTX to motherboard.
12. Remove YTX from RF Module.

Installation

13. Place YTX in RF Module. Be sure insulator is properly installed between YTX and motherboard.
14. Replace two screws ⑦ to attach YTX to motherboard.
15. Reconnect bus cable ⑥ to motherboard.

Caution The A6A8 YTX contains an extremely sensitive diode located inside the LO/IF connector. This diode is highly susceptible to blow-out from static discharge. Be very careful when connecting cables to the YTX to avoid damaging this diode. Ground (discharge) all cables before connecting them the YTX.

16. Reconnect coaxial cables to YTX.
17. Place A6A7 YTX Current Driver in RF Module and secure with two screws ⑤.
18. Reconnect 5-pin connector ④ to A6A7.
19. Replace ribbon cable ⑤ between A6A7 and motherboard.
20. Replace A6A9 assembly and A6A10, A6A11, and A6A12 PC boards.
21. Reconnect 4 (yellow) cable and 5 (green) cable to 2nd Converter.
22. Replace RF Module PC board cover and secure with six screws ②.
23. Reconnect five cables to RF Module PC boards; three to A6A9 Phase Lock and two to A6A12 YTX Driver. Cables are color-coded and color codes are labeled on PC board cover.
24. Reconnect cable ① between All YTO Loop and RF Module.
25. Replace top and bottom covers on RF Section, recombine instrument sections, and reconnect ac line cords.

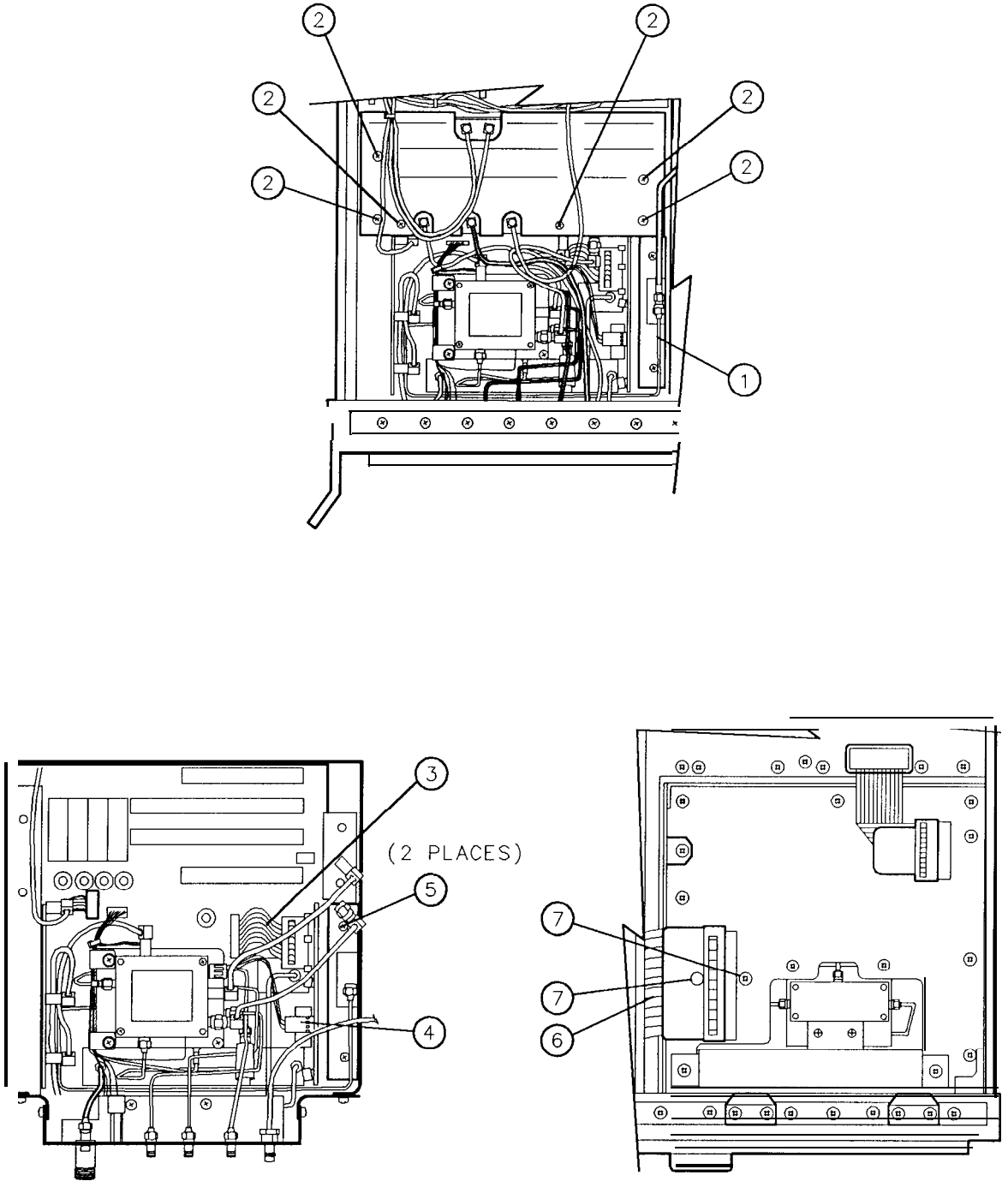

Figure 4. **A6A8** YTX Replacement

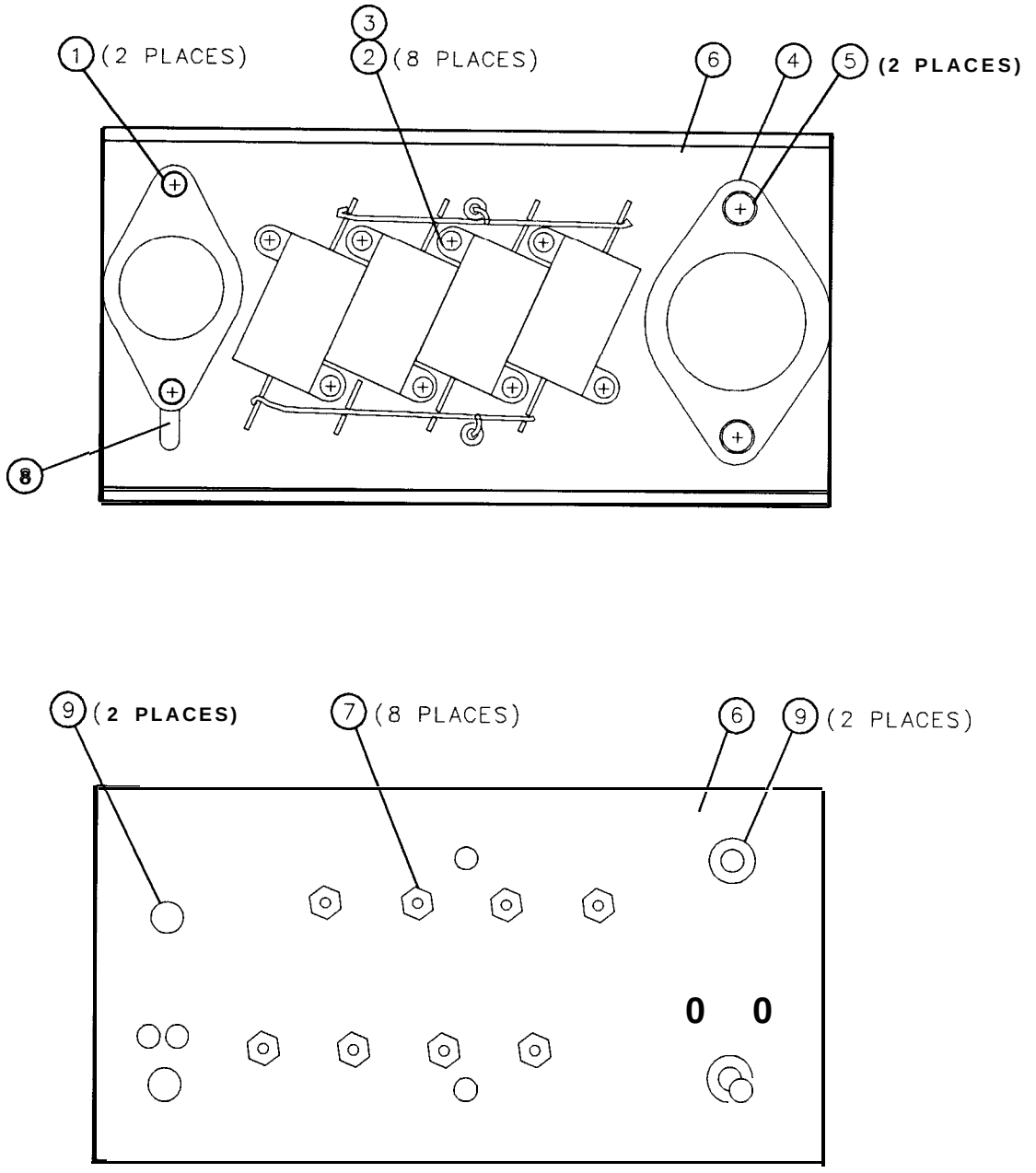

Figure 5. **A6A7** YTX Current Driver, Parts Identification (1 of 2)

Item	HP Part Number	CD	Description	Mfr Code	Mfr Part Number
1	2200-0107	6	SCREW, MACH, 4-40, .375-IN LG, PAN HD	28480	2200-0107
2	0520-0128	7	SCREW, MACH, 2-56, .25-IN LG, PAN HD	28480	0520-0128
3	2190-0014	1	WASHER, LOCK, 2-56, (FOR SCREW (2))	28480	2190-0014
4	1200-0043	8	INSULATOR, TRANSISTOR (FOR Q6)	28480	1200-0043
5	2200-0109	8	SCREW, MACH, 4-40, .438-IN LG, PAN HD	28480	2200-0109
6	85660-00023	9	HEAT SINK, YTX CURRENT DRIVER	28480	85660-00023
7	0610-0001	6	NUT, HEX, 2-56 (FOR SCREW (2))	28480	0610-0001
8	0340-0162	7	INSULATOR, TRANSISTOR (FOR Q7)	28480	0340-0162
9	0340-1064	0	INSULATOR, BUSHING (FOR Q6 & Q7)	28480	0340-1064

Figure 5. **A6A7** YTX Current Driver, Parts Identification (2 of 2)

HP Part Number 85660-60128

A6A7 YTX Current Driver

Reference Designatior	HP Part Number	ID	Qty	Description	Mfr Code	Mfr Part Number
A6A7	85660-60128		1	BOARD ASSEMBLY, YTX CURRENT DRIVER	2848(	85660-60128
A6A7C1	0180-0094	4	1	CAP-FXD 100uF 25 V AL-ELCTLT	5628S	30D107G025DD2-DSM
A6A7CR1	1901-1067	4	1	DIODE-SWITCHING 125V 175MA 60NS DO-35	2701/	FDH444
A6A7CR2	1901-1067	4	1	DIODE-SWITCHING 125V 175MA 60NS DO-35	27014	FDH444
A6A7CR3	1901-1067	4	1	DIODE-SWITCHING 125V 175MA 60NS DO-35	27014	FDH444
A6A7DS1	1990-0485	5	1	LED-LAMP LUM-INT=2MCD IF=30MA-MAX BVR=5V	28481	HLMP-1503
A6A7DS2	1990-0486	6	1	LED-LAMP LUM-INT=2MCD IF=25MA-MAX BVR=5V	2848(	HLMP-1301
A6A7J1	1251-5146	9	1	CONN-POST TYPE .100-PIN-SPCG 5-CONT	00779	87502-2
A6A7J2	1251-5144	7	1	CONN-POST TYPE .100-PIN-SPCG 13-CDNT	00779	87502-6
A6A7MP1				NOT ASSIGNED		
A6A7MP2	0340-0949	8	1	INSULATOR-XSTR THRM-CNDCT	18565	60-11-5791-1674
A6A7MP3	0380-1602	8	4	STANDOFF-RVT-ON .1-IN-LG 4-40-THD	05791	BR 6905 B-0.100-43
A6A7MP4	0520-0128	7	8	SCREW-MACH 2-56 .25-IN-LG PAN-HD-POZI	77250	
A6A7MP5	0610-0001	3	8	NUT-HEX-DBL-CHAM 2-56-THD .062-IN-THK	73734	
A6A7MP6	0340-1114	1	1	INSULATOR-XSTR THRM-CNDCT	55285	K-4-05
A6A7MP7	0340-1064	3	4	INSULATOR-FLG-BSHG NYLON		
A6A7MP8	1200-0081	4	2	INSULATOR-NYLON BUSHING .115 ID	28480	1200-0081
A6A7MP9	35660-00023	9	1	HEAT SINK CR OR	28480	85660-00023
A6A7MP10	3151-0013	4	1	WIRE 22 1X22	28480	8151-0013
A6A7MP12	2190-0014	1	8	WASHER-LK INTL T NO. 2 .089-IN-ID	78189	1902-00-00-2580
A6A7MP13	2200-0109	3	4	SCREW-MACH 4-40 .438-IN-LG PAN-HD-PDZI	77250	
A6A7MP14	3050-0239	7	1	WASHER-FL NM NO. 8 .17-IN-ID .375-IN-OD	73734	33-112
A6A7Q1	1853-0281	9	1	TRANSISTOR PNP 2N2907A SI TO-18 PD=400MW	04713	2N2907A
A6A7Q2	1853-0281	9	1	TRANSISTOR PNP 2N2907A SI TO-18 PD=400MW	04713	2N2907A
A6A7Q3	1854-0477	7	1	TRANSISTOR NPN 2N2222A SI TO-18 PD=500MW	04713	2N2222A
A6A7Q4	1853-0038	1	1	TRANSISTOR PNP SI TO-39 PD=1W FT=100MHZ	04713	
A6A7Q5	1853-0038	1	1	TRANSISTOR PNP SI TO-39 PD=1W FT=100MHZ	04713	
A6A7Q6	1853-0391	2	1	TRANSISTOR PNP 2N6051 SI DARL TO-3	04713	2N6051
A6A7Q7	1853-0234		1	TRANSISTOR PNP SI PD=65W FT=3MHZ	28480	1853-0234
A6A7Q8	1884-0282	5	1	THYRISTOR-TRIAC 2N6073	04713	2N6073
A6A7R1	0698-3157	3	1	RESISTOR 19.6K 1% .125W TF TC=0+-100	19701	SFR25H
A6A7R2	0757-0447	4	1	RESISTOR 16.2K +-1% .125W TF TC=0+-100	19701	SFR25H
A6A7R3	0757-0421	4	1	RESISTOR 825 +-1% .125W TF TC=0+-100	19701	SFR25H
A6A7R4	0757-0465	6	1	RESISTOR 100K +-1% .125W TF TC=0+-100	19701	SFR25H
A6A7R5	0698-3157	3	1	RESISTOR 19.6K 1% .125W TF TC=0+-100	19701	SFR25H
A6A7R6	0698-3438	3	1	RESISTOR 147 1% .125W TF TC=0+-100	19701	SFR25H
A6A7R7	0757-0416		1	RESISTOR 511 +-1% .125W TF TC=0+-100	19701	SFR25H
A6A7R8	0757-0458		1	RESISTOR 51.1K +-1% .125W TF TC=0+-100	19701	SFR25H
A6A7R9	3757-0442	9	1	RESISTOR 10K +-1% .125W TF TC=0+-100	19701	SFR25H
A6A7R10	0757-0458		1	RESISTOR 51.1K +-1% .125W TF TC=0+-100	19701	SFR25H
A6A7R11	0757-0442	9	1	RESISTOR 10K +-1% .125W TF TC=0+-100	19701	SFR25H
A6A7R12	1698-3635		1	RESISTOR 680 5% 2W MO TC=0+-200	11502	GS-3
A6A7R13	1757-0438	3	1	RESISTOR 5.11K +-1% .125W TF TC=0+-100	19701	SFR25H
A6A7R14	1811-0653		1	RESISTOR 100 +-1% 12W PWN TC=0+-5	01686	ALN-10
A6A7R15	1811-0653	0	1	RESISTOR 100 +-1% 12W PWN TC=0+-5	01686	ALN-10
A6A7R16	0811-0653		1	RESISTOR 100 +-1% 12W PWN TC=0+-5	01686	ALN-10
A6A7R17	0811-0653	0	1	RESISTOR 100 +-1% 12W PWN TC=0+-5	01686	ALN-10

**Indicates factory-selected value*

HP Part Number 85660-60128

A6A7 YTX Current Driver

Reference Designatior	HP Part Number	C D	Qty	Description	Mfr Code	Mfr Part Number
A6A7R18	0757-0401	0	1	RESISTOR 100 +-1% .125W TF TC=O+-100	19701	SFR25H
A6A7R19	0698-0082	7	1	RESISTOR 464 1% .125W TF TC=O+-100	19701	SFR25H
A6A7R20	0757-0416	7	1	RESISTOR 511 +-1% .125W TF TC=O+-100	19701	SFR25H
A6A7R21	0698-3395	1	1	RESISTOR 34.8 1% .5W TF TC=O+-100	19701	5053R
A6A7U1	1826-1058	3	1	IC OP AMP GP a-TO-99 PKG	06665	OP-02CJ
A6A7VR2	1902-0967	3	1	DIODE-ZNR 24V 5% DO-35 PD=.4W TC=+.094%	04713	
A6A7VR4	1902-0644	3	1	DIODE-ZNR 1153638 30V 5% PD=5W TC=+29MV	04713	

**Indicates factory-selected value*

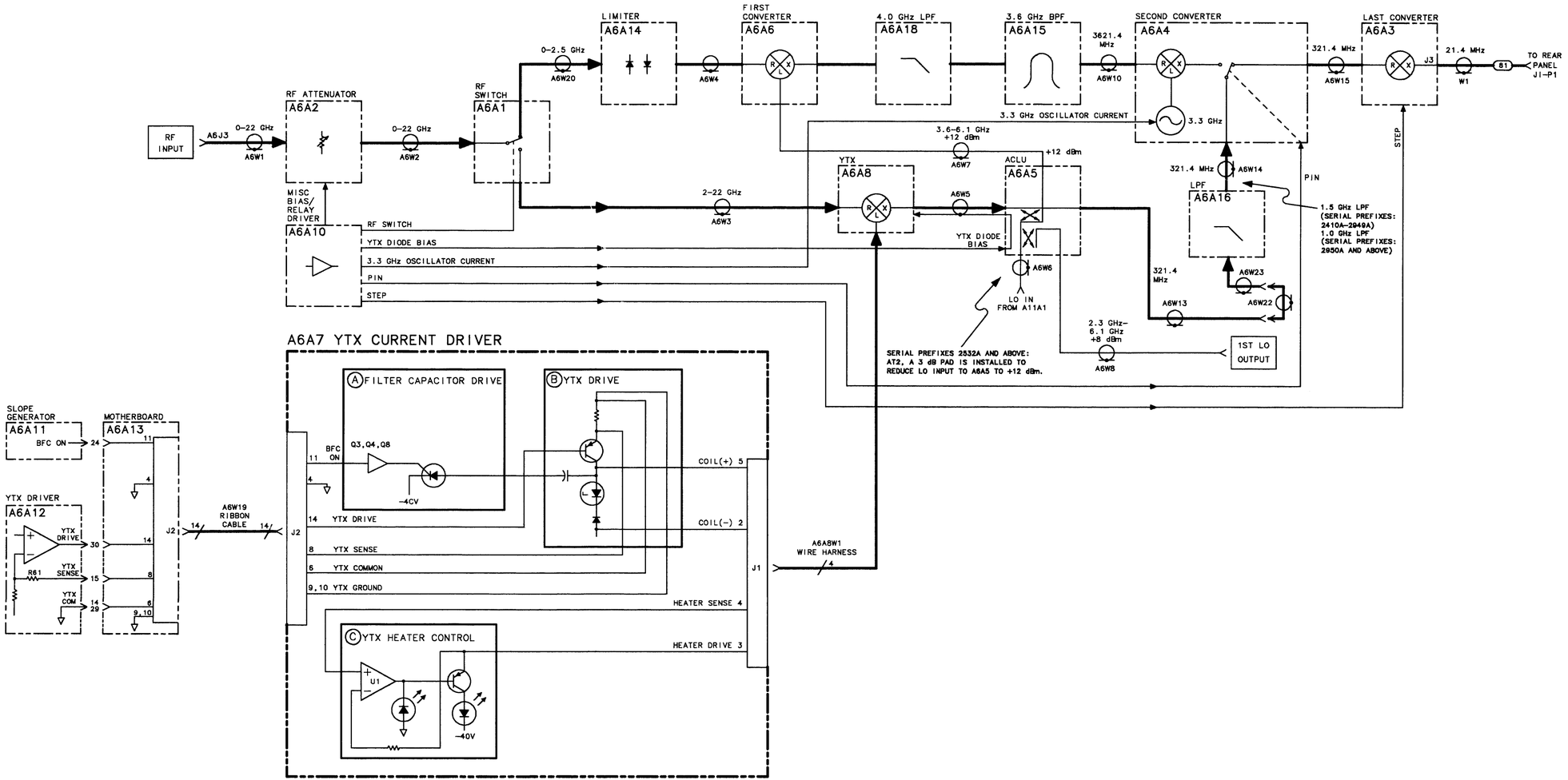

A6A7 YTX CURRENT DRIVER, BLOCK DIAGRAM

PC BOARD SIDE

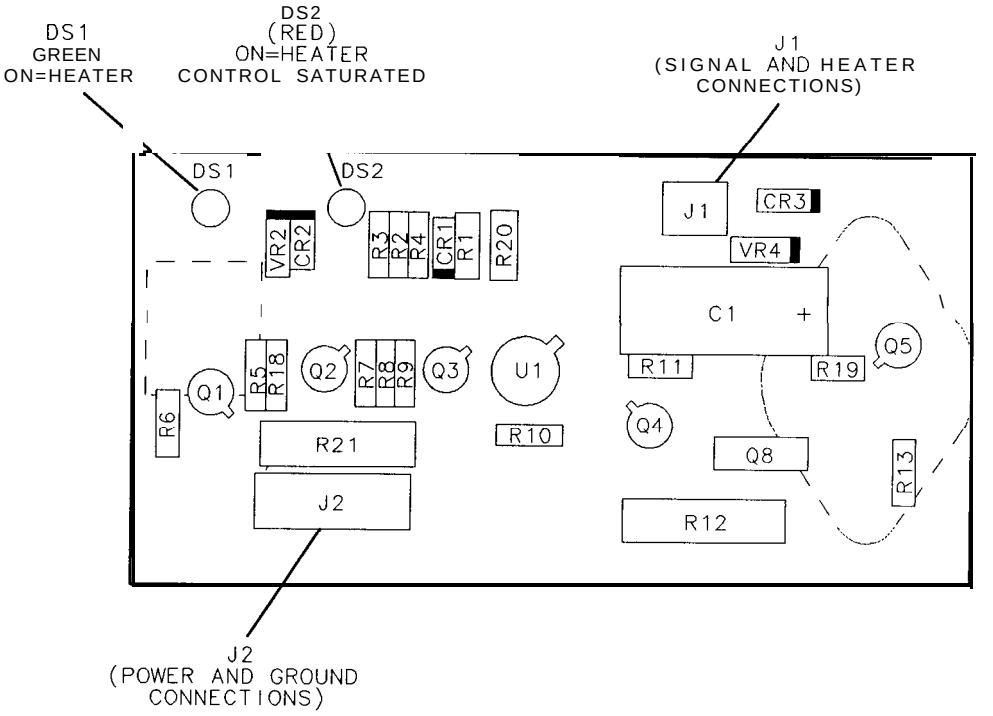

HEAT SINK SIDE

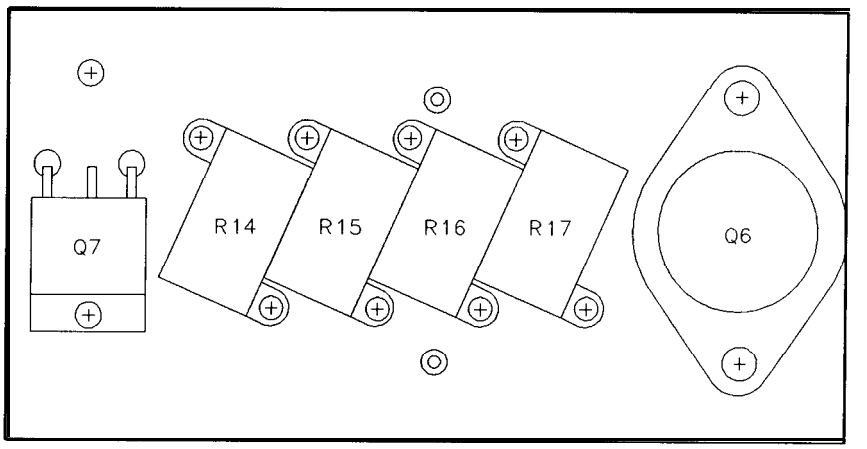

A6A7 YTX Current Driver Component Locations, 85660-60128

A6A7 YIG-TUNED MIXER (YTX) CURRENT DRIVER
85660-60128
(SERIAL PREFIX: 2410A)

J1

PIN	SIGNAL	TO/FROM	FUNCTION BLOCK
1	NC		
2	COIL (-)	A6A8P1-1	B
3	HEATER DRIVE	A6A8P1-4	C
4	HEATER SENSOR	A6A8P1-3	C
5	COIL (+)	A6A8P1-5	B
6	NC		

J2

PIN	SIGNAL	TO/FROM	FUNCTION BLOCK
1	+20V		D
2	-10V		D
3	NC		
4	GND		D
5	NC		
6	YTX COM	A6A12P1-14,29	B
7	NC		
8	YTX SENSE	A6A10P1-21	B
9	GND	A6A13	B
10	GND	A6A13	B
11	BFC ON	A6A11P1-24	A
12	NC		
13	-40V		D
14	YTX DRIVE	A6A12P1-30	B

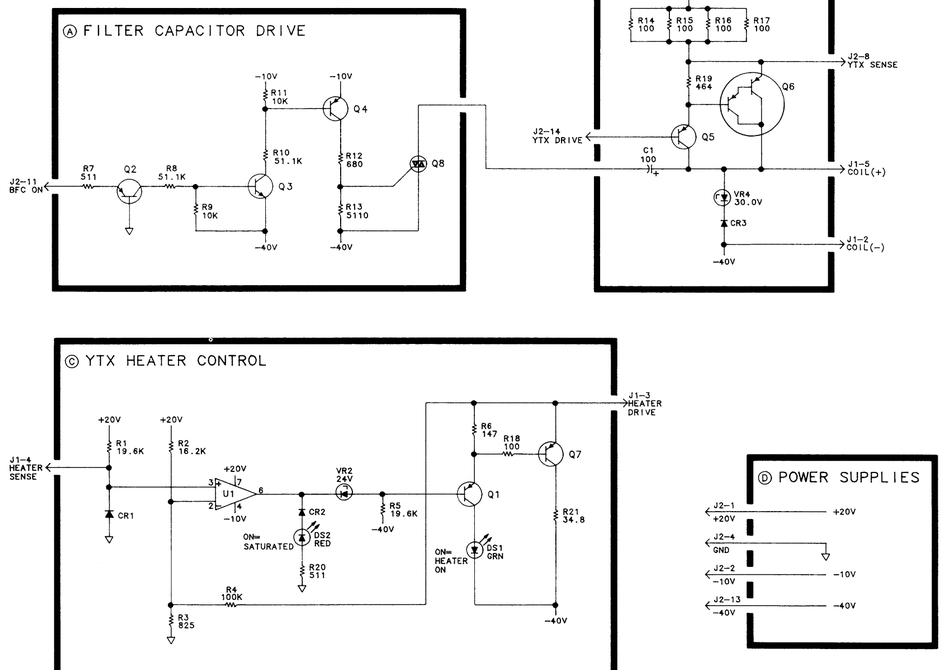

NOTES:

1. REFERENCE DESIGNATORS WITHIN THIS ASSEMBLY ARE ABBREVIATED. FOR COMPLETE REFERENCE DESIGNATION, PREFIX ABBREVIATION WITH ASSEMBLY DESIGNATION.
2. UNLESS OTHERWISE INDICATED: RESISTANCE IS IN OHMS (Ω) CAPACITANCE IS IN MICROFARADS(μF) INDUCTANCE IS IN MICROHENRIES(μH)
3. UNLESS OTHERWISE INDICATED: SIGNALS ENTER AT LEFT SIDE AND EXIT AT RIGHT SIDE OF FUNCTION BLOCKS.
4. MNEMONIC TABLE

MNEMONIC	DESCRIPTION
BFC ON	FILTER CAPACITOR ENABLE

A6A7

A6A7 YIG-TUNED MIXER (YTX) CURRENT DRIVER, SCHEMATIC DIAGRAM

A6A9

A6A9 Phase Lock, Circuit Description

The A6A9 Phase Lock has three major functions:

1. To provide a stable -10.0 dBm, 100 MHz calibrator signal to the RF Section front panel.
2. To provide a 300 MHz local oscillator to the A6A3 Last Converter assembly.
3. To phase-lock the 3.3 GHz second local oscillator in the A6A4 Second Converter assembly to the 33rd harmonic of the 100 MHz reference signal produced by the A7A2 100 MHz VCXO assembly. This 3.3 GHz phase lock loop is called the Heterodyne Loop.

100 MHz Buffer Amplifier Ⓐ

The 100 MHz buffer amplifier Q1 amplifies the reference signal from the A7A2 100 MHz VCXO assembly. Low pass matching network, L1 and C4, provides a 50Ω input impedance. Transformer T1 acts as a power divider, supplying the 100 MHz signal to both the Driver circuit and the Phase Lock circuit.

Driver Ⓒ

Transistor Q2 amplifies the 100 MHz from the 100 MHz Buffer Amplifier. Power divider T2 drives both the 100 MHz Calibrator and the 300 MHz LO circuit.

100 MHz Calibrator Ⓓ

The Calibrator circuit consists of a differential amplifier, Q3A and Q3B, followed by a low pass filter. Low pass filters C19, L8, C20, L9, and C22, reduce higher order harmonics on the front panel calibrator output. Potentiometer R11 and factory-select resistor R10 set the gain of Q3.

Tripler Ⓖ

With the 100 MHz input from the Driver circuit, the Tripler circuit produces a 300 MHz output at approximately +6 dBm. Inductor L10 and C24 are used for impedance matching. The output tank circuit, formed by L11 and the output capacitance of transistor Q4, resonates at 300 MHz. Capacitor C29 adjusts the loading of the stage and couples the output to the Power Amplifier.

300 MHz Power Amplifier Ⓗ

The output of the 300 MHz Power Amplifier, approximately +20 dbm, is the local oscillator for the A6A3 Last Converter. Capacitor C30 reduces the sub-harmonic content of the output. The output filter C52, L21, and C53, reduces higher order harmonics while maintaining a 50Ω output impedance.

Sampler Driver Ⓑ

Amplifier U2 drives the Sampler step-recovery diode (function block E) with the 100 MHz signal at a level of approximately +20 dBm. Capacitors C8, C9, and L4 match the forward-biased impedance of the diode to U2. Resistor R5 loads the output of U2 during the diode's reverse biased condition.

Sampler Ⓔ and Loop Integrator Ⓕ

The output of the sampler is a dc voltage proportional to the phase difference between the 33rd harmonic of the 100 MHz reference and the 3.3 GHz second local oscillator (A6A4 Second Converter). Integrator U3 supplies a tune voltage to the 3.3 GHz second local oscillator. This heterodyne loop phase locks the oscillator to the 100 MHz reference signal. Potentiometer R38 adjusts the output balance of the sampler. Capacitor C46 is the integrator capacitor for U3.

Aided Acquisition and Unlock Detector Ⓘ

The output tune voltage from the Loop Integrator (function block F) becomes – 25 V when the 3.3 GHz Heterodyne Loop is unlocked. The Aided Acquisition circuitry detects this condition and retunes the 3.3 GHZ oscillator on the A6A4 Second Converter assembly within the capture range of the phase-lock loop. The Aided Acquisition circuitry also controls the Lock Indicator (function block J).

The Negative Rail Detector U4A is an inverting comparator. The threshold voltage at pin 5 is set at -23.5 V. During unlock, the input of U4A becomes more negative than the threshold voltage and the comparator output becomes positive. Resistor R21 provides positive feedback, stabilizing the circuit. Resistors R25 and R26 form a voltage divider reducing the input to U4B below the value of the power supplies. The positive output of U4A triggers One Shot multivibrator U4B. The negative output of U4B forward biases diodes CR1 and CR2. The diodes become a constant current source for integrator capacitor C46 (function block F), causing a positive direction search ramp of voltage at the output of U3. This search ramp tunes the 3.3 GHz second local oscillator through the capture range of the phase-lock loop.

If the phase-lock loop does not phase-lock on the search ramp, the tune voltage will remain positive until the One Shot recovers, reverse biasing CR1 and CR2. The output of U3 then becomes negative (unlock condition), causing the Aided Acquisition circuitry to repeat the search cycle until phase-lock occurs. This results in a sawtooth tune waveform with a period of approximately 6 ms.

The One Shot pulse width of approximately 1 ms is controlled by R24 and C38. This is the time it takes for the voltage on pin 7 to decay to -25 V to less the -20 V. During this time, the input to U4C has become -20 V due to the positive tune voltage ramp. In high band the 3.3 GHz second local oscillator is switched off; the PIN signal goes negative, which disables the search ramp and unlock detector through CR3.

Switch and Unlock Detector: When unlock occurs, the output of U4B becomes low, causing U4C to have a low output. The output of U4D becomes positive, turning off Q5. If no lock occurs on the search ramp, the delay caused by resistor R27 and capacitor C37 keeps Q5 off until the next search cycle begins. This delay is different for an HP 85660A RF Section, and is set by the value of R27.

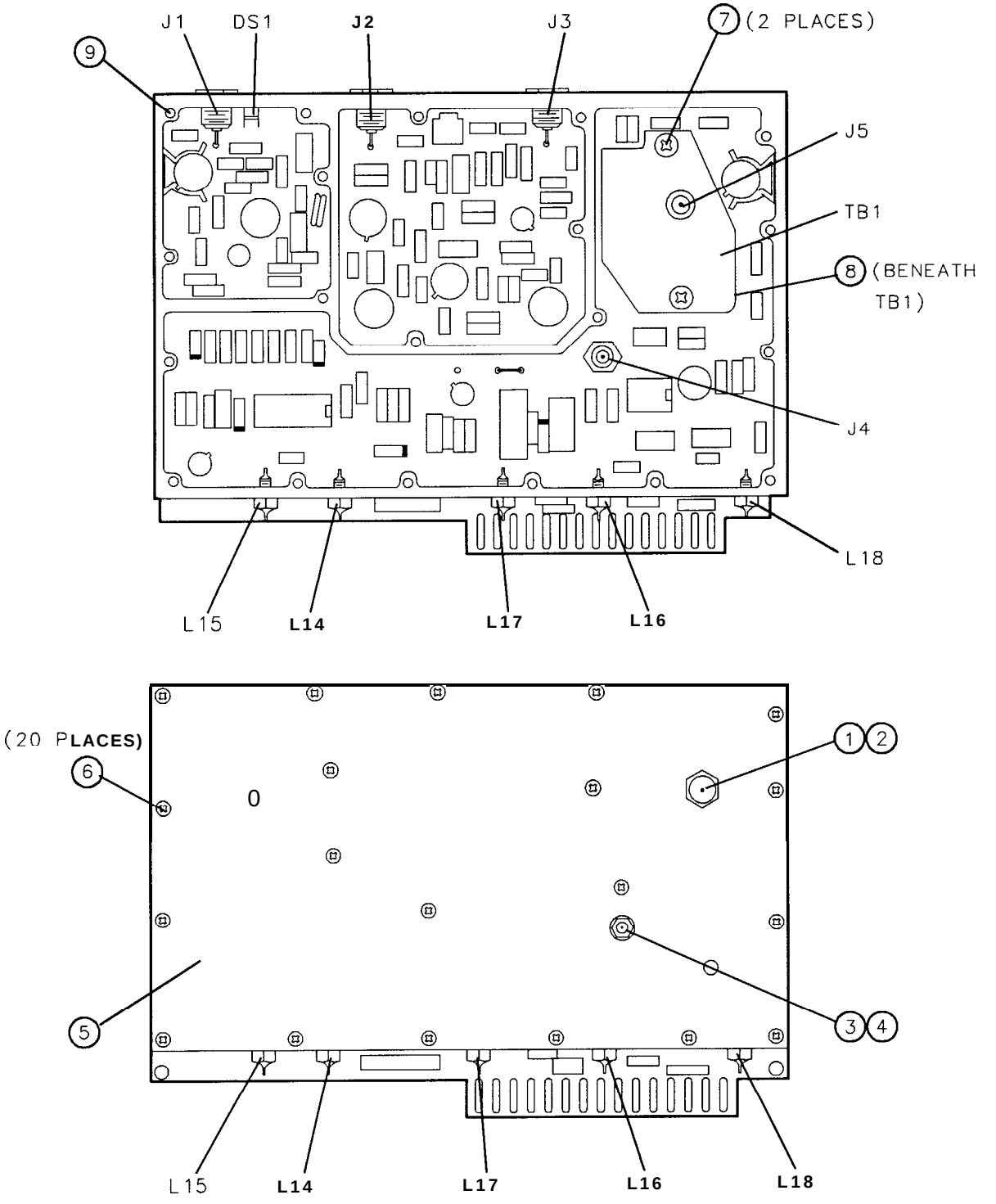

Figure 1. **A6A9** Phase Lock Assembly, Internal and Front Views

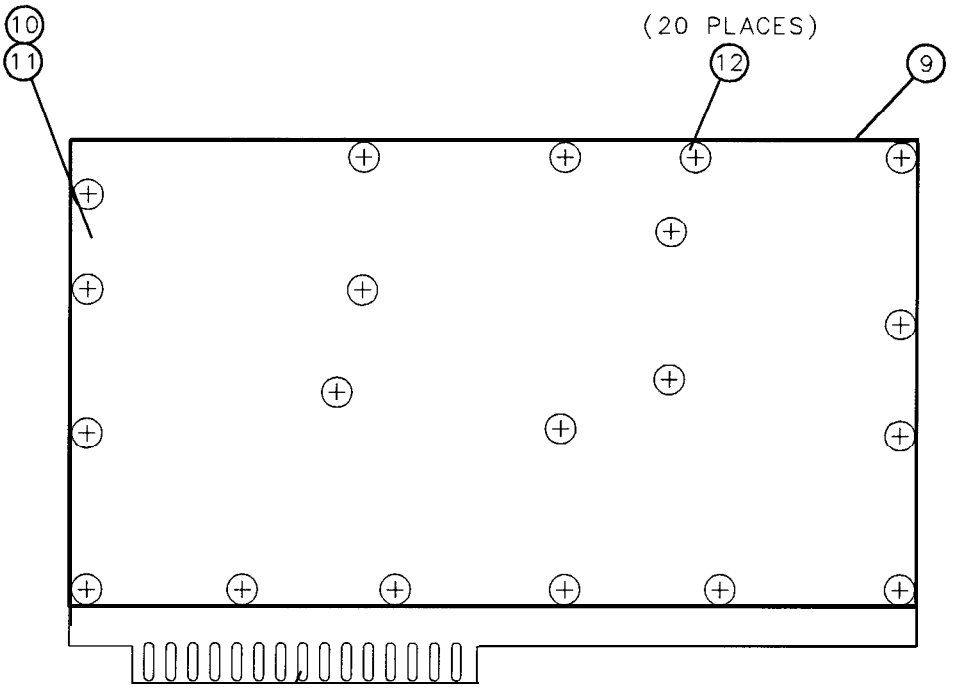

Item	HP Part Number	CD	Description	Mfr Code	Mfr Part Number
1	2950-0177	9	NUT, HEX, RF CONNECTOR (FOR J5)	28480	2950-0177
2	2190-0067	4	WASHER, LOCK, RF CONNECTOR (FOR J5)	28480	2190-0067
3	2950-0078	9	NUT, HEX, 10-32 (FOR J4)	28480	2950-0078
4	2190-0557	7	WASHER, LOCK, .195-IN ID (FOR J4)	28480	2190-0557
5	85660-00070	6	COVER, FRONT, PHASE LOCK ASSEMBLY	28480	85660-00070
6	2200-0140	7	SCREW, MACH, 4-40, .250-IN LG, FL HD	28480	2200-0140
7	2200-0109	8	SCREW, MACH, 4-40, .438-IN LG, PAN HD	28480	2200-0109
8	86701-00054	8	SPACER-SAMPLER (BETWEEN TB1 AND U1)	28480	86701-00054
9	85660-20204	0	HOUSING, PHASE LOCK ASSEMBLY	28480	85660-20204
10	85660-20205	1	COVER, REAR, PHASE LOCK ASSEMBLY	28480	85660-20205
11	85660-80061	3	INSULATING SHIELD, PLASTIC	28480	85660-80061
12	2200-0148	5	SCREW, MACH. 4-40, .500-IN LG, FL HD	28480	2200-0148

Figure 2. **A6A9** Phase Lock Assembly, Parts Identification, Rear View

HP Part Number 85660-60226

A6A9 Phase Lock Assembly

Reference Designation	HP Part Number	CD	Qty	Description	Mfr Code	Mfr Part Number
A6A9	85660-60226	0	1	PHASE LOCK ASSEMBLY (SERIAL PREFIX: 2410A-2503A)	28480	85660-60226
A6A9A1	85660-60202	2	1	PHASE LOCK BOARD ASSEMBLY (PART OF A6A9. MAY NOT BE ORDERED SEPARATELY.) (PARTS LIST INCLUDED IN THIS SECTION.)	28480	85660-60202
A6A9J1	1250-0544	9	1	CONNECTOR-RF SM-SNP M SGL-HOLE-FR SO-OHM	98291	051-049-0000-220
A6A9J2	1250-0544	9	1	CONNECTOR-RF SM-SNP M SGL-HOLE-FR SO-OHM	98291	051-049-0000-220
A6A9J3	1250-0544	9	1	CONNECTOR-RF SM-SNP M SGL-HOLE-FR 50-OHM	98291	051-049-0000-220
A6A9L14	9135-0002	8	1	FILTER-LOW PASS SOLDER-TERMS	33095	51-744-018
A6A9L15	9135-0002	8	1	FILTER-LOW PASS SOLDER-TERMS	33095	51-744-018
A6A9L16	9135-0002	8	1	FILTER-LOW PASS SOLDER-TERMS	33095	51-744-018
A6A9L17	9135-0002	8	1	FILTER-LOW PASS SOLDER-TERMS	33095	51-744-018
A6A9L18	9135-0002	8	1	FILTER-LOW PASS SOLDER-TERMS	33095	51-744-018
A6A9MP2	85660-80061	3	1	INSULATOR, MYLAR, CLEAR	28480	85660-80061
A6A9MP3	1250-1142	5	1	WASHER-LK INTL T 1/2 IN .256-IN-ID (J5)	28480	1250-1142
A6A9MP4	1250-1143	6	1	NUT-RF CONNECTOR SERIES SMA HEX NUT (J5)	28480	1250-1143
A6A9MP5	2190-0559	7	1	WASHER-LK INTL T ND. 10 .195-IN-ID (J4)	28480	2190-0559
A6A9MP6	2200-0140	7	20	SCREW-MACH 4-40 .25-IN-LG 100 DEG	28480	2200-0140
A6A9MP7	2200-0148	5	20	SCREW-MACH 4-40 .5-IN-LG 100 DEG	28480	2200-0148
A6A9MP8	85660-20205	1	1	COVER, BOTTOM	28480	85660-20205
A6A9MP9	85660-20204	0	1	HOUSING, PHASE LOCK 80X	28480	85660-20204
A6A9MP10	2950-0078	9	1	NUT-HEX-DBL-CHAM 10-32-THD .067-IN-THK	28480	2950-0078
A6A9MP11	85660-00070	6	1	COVER, PHASE LOCK	28480	85660-00070
A6A9MP12	86701-00054	8	1	SPACER, SAMPLER	28480	86701-00054
A6A9MP13	1251-3172	7	3	CONNECTOR-SGL CONT SKT .03-IN-BSC-SZ RND	28480	1251-3172
A6A9MP14	2200-0107	8	2	SCREW-MACH 4-40 .438-IN-LG PAN-HD-POZI	28480	2200-0107
A6A9MP15	85660-60008	6	1	BOARD ASSEMBLY. SAMPLER	28480	85660-60008
A6A9U1	5086-7097	6	1	SAMPLER 2-6.5 GHZ (PREFERRED)	28480	5086-7097
A6A9U1	5086-7292	3	0	SAMPLER 2-6.0 GHZ (ALTERNATE FOR 5086-7097)	28480	5086-7292

**Indicates factory-selected value*

HP Part Number 85660-60256

A6A9 Phase Lock Box

Reference Designation	HP Part Number	C. D	Qty	Description	Mfr Code	Mfr Part Number
A6A9	85660-60256	6	1	PHASE LOCK ASSEMBLY (SERIAL PREFIX: 2504A)	28480	85660-60256
A6A9A1	85660-60253	3	1	PHASE LOCK BOARD ASSEMBLY (PART OF A6A9. MAY NOT BE ORDERED SEPARATELY.) (PARTS LIST INCLUDED IN THIS SECTION.)	28480	85660-60253
A6A9A1U2	1813-0213	.	1	IC WIOEBANO AMPL TO-39 PKG	04713	MWA130
A6A9DS1	1990-0485	F	1	LEO-LAMP LUM-INT=2MCD IF=30MA-MAX BVR=5V	28480	HLMP-1503
A6A9J1	1250-0544	C	1	CONNECTOR-RF SM-SNP M SGL-HOLE-FR 50-OHM	98291	051-049-0000-220
A6A9J2	1250-0544	C	1	CONNECTOR-RF SM-SNP M SGL-HOLE-FR 50-OHM	98291	051-049-0000-220
A6A9J3	1250-0544	9	1	CONNECTOR-RF SM-SNP M SGL-HOLE-FR 50-OHM	98291	051-049-0000-220
A6A9L14	9135-0002	8	1	FILTER-LOW PASS SOLDER-TERMS	33095	51-744-018
A6A9L15	9135-0002	8	1	FILTER-LOW PASS SOLDER-TERMS	33095	51-744-018
A6A9L16	9135-0002	8	1	FILTER-LOW PASS SOLDER-TERMS	33095	51-744-018
A6A9L17	9135-0002	8	1	FILTER-LOW PASS SOLDER-TERMS	33095	51-744-018
A6A9L18	9135-0002	8	1	FILTER-LOW PASS SOLDER-TERMS	33095	51-744-018
A6A9L19	9135-0002	8	1	FILTER-LOW PASS SOLDER-TERMS	33095	51-744-018
A6A9MP2	85660-80061	3	1	INSULATOR MYLAR CLEAR	28480	85660-80061
A6A9MP3	1250-1142	5	1	WASHER-LK INTL T 1/2 IN .26-IN-IO (55)	16179	2098-5856-04
A6A9MP4	1250-1143	6	1	NUT-RF CONNECTOR SERIES SMA HEX NUT (J5	16179	2098-5862-00
A6A9MP5	2190-0557	7	1	WASHER-LK INTL T NO. 10 .195-IN-ID (J4)	78189	1210-06-00-0551
A6A9MP6	2200-0140	7	2c	SCREW-MACH 4-40 .25-IN-LG 100 OEG	77250	
A6A9MP7	2200-0148	5	2c	SCREW-MACH 4-40 .5-IN-LG 100 OEG	77250	
A6A9MP8	35660-20226	6	1	COVER BOTTOM	28480	85660-20226
A6A9MP9	35660-20225	5	1	HOUSING PHASE LOCK BOX	28480	85660-20225
A6A9MP10	2950-0078	9	1	NUT-HEX-DEL-CHAM 10-32-THD .067-IN-THK	74163	500220
A6A9MP11	35660-00089	7	1	COVER PHASE LOCK	28480	85660-00089
A6A9MP12	36701-00054	a	1	SPACER SAMPLER	28480	86701-00054
A6A9MP13	1251-3172	7	1	CONNECTOR-SGL CONT SKT .03-IN-BSC-SZ RND	00779	2-331677-9
A6A9MP14	2200-0109	8	2	SCREW-MACH 4-40 .438-IN-LG PAN-HO-POZI	77250	
A6A9MP15	35660-20008	2	1	SAMPLER BOARD	28480	85660-20008
A6A9U1	5086-7097	6	1	SAMPLER 2-6.5 GHZ (PREFERRED)	28480	5086-7097
A6A9U1	5086-7292	3	0	SAMPLER 2-6.5 GHZ (ALTERNATE FOR 5086-7097)	28480	5086-7292

**Indicates factory-selected value*

HP Part Number 85660-60202

A6A9A1 Phase Lock Board

Reference Designation	HP Part Number	C. D	Qty	Description	Mfr Code	Mfr Part Number
A6A9A1	85660-60202	2	1	BOARD ASSEMBLY, PHASE LOCK (SERIAL PREFIXES: 2140A-2503A)	2848(	85660-60202
A6A9A1C1	0160-4835	7	1	CAPACITOR-FXO .1UF +-lo% 50VOC CER	04222	SA115C104KAAH
A6A9A1C2	0160-4574	1	5	CAPACITOR-FXO 100PF +-10% 100VDC CER	2848(	1060-4574
A6A9A1C3	0160-4574	1	1	CAPACITOR-FXO 1000PF +-10% 100VDC CER	04222	SA101C102KAAH
A6A9A1C4	0160-3874	2	1	CAPACITOR-FXO 10PF +-.5PF 200VDC CER 0+-		FD12C0G2D100D
A6A9A1C5	0160-3878	6	1	CAP-FXO 1000pF 100 V	04222	SR201C102MAAH
A6A9A1C6	0160-4084	a	1	CAP-FXO 0.1uF 50 V	56289	1C20X7R104M050B
A6A9A1C7	0160-3878	6	1	CAP-FXO 1000pF 100 V	04222	SR201C102MAAH
A6A9A1C8	0160-4494	4	1	CAPACITOR-FXO 39PF +-5% 200VDC CER 0+-30		FD12C0G2D390J
A6A9A1C9	0160-4494	4	1	CAPACITOR-FXO 39PF +-5% 200VOC CER 0+-30		FD12C0G2D390J
A6A9A1C10	0160-3878	6	1	CAP-FXO 1000pF 100 V	04222	SR201C102MAAH
A6A9A1C11	0160-3878	6	1	CAP-FXO 1000pF 100 V	04222	SR201C102MAAH
A6A9A1C12	0160-4385	2	1	CAP-FXO 15pF 200 V		RPE121-105C0G150J200V
A6A9A1C13	0160-3878	6	1	CAP-FXO 1000pF 100 V	04222	SR201C102MAAH
A6A9A1C14	0160-3878	6	1	CAP-FXO 1000pF 100 V	04222	SR201C102MAAH
A6A9A1C15	0160-4084	a		CAPACITOR-FXO .1UF +-20% 50VOC CER	28480	0160-4084
A6A9A1C16	0160-3878	6	1	CAP-FXO 1000pF 100 V	04222	SR201C102MAAH
A6A9A1C17	0160-3878	6	1	CAP-FXO 1000pF 100 V	04222	SR201C102MAAH
A6A9A1C18	0160-3878	6	1	CAP-FXO 1000pF 100 V	04222	SR201C102MAAH
A6A9A1C19	0160-4387	4	1	CAPACITOR-FXO 47PF +-5% 200VDC CER 0+-30		FD12C0G2D470J
A6A9A1C20	0160-4350	1	1	CAP-FXO 68pF 200 V		FD12C0G2D680J
A6A9A1C21	0180-0500	7	1	CAP-FXO 47uF 20 V TA	56289	19901114
A6A9A1C22	0160-4387	4	1	CAPACITOR-FXO 47PF +-5% 200VDC CER 0+-30		FD12C0G2D470J
A6A9A1C23	0160-4574	1	1	CAPACITOR-FXO 1000PF +-lo% 100VDC CER	04222	SA101C102KAAH
A6A9A1C24	0160-3875	3	1	CAPACITOR-FXD 22PF +-5% 200VOC CER 0+-30		FD12C0G2D220J
A619A1C25	0160-4084	3	1	CAPACITOR-FXD .1UF +-20% 50VOC CER	28480	0160-4084
A6A9A1C26	0160-3878	6	1	CAP-FXD 1000pF 100 V	04222	SR201C102MAAH
A6A9A1C27	0160-3878	6	1	CAPACITOR-FXD 1000PF +-20% 100 VOC CER	28480	0160-3878
A6A9A1C29	0121-0452	4	1	CAPACITOR-V TRMR-AIR 1.3-5.4PF 175V PC-M	74970	187-0103-028
A6A9A1C30	0160-4492	2	1	CAPACITOR-FXO 18PF +-5% 200VOC CER 0+-30		FD12C0G2D180J
A6A9A1C31	0160-4084	a	1	CAP-FXO 0.1uF 50 V	56289	1C20X7R104M050B
A6A9A1C32	0160-4389	6	1	CAP-FXO 100pF 200 V	04222	SR202A101JAAH
A6A9A1C33	0160-4383	0	1	CAPACITOR-FXO 6.8PF +-.5PF 200VDC CER 0+		FD12C0G2D6R8D
A6A9A1C34	0160-3878	6	1	CAP-FXO 1000pF 100 V	04222	SR201C102MAAH
A6A9A1C35	0160-3878	6	1	CAP-FXO 1000pF 100 V	04222	SR201C102MAAH
A6A9A1C36	0160-3878	6	1	CAP-FXO 1000pF 100 V	04222	SR201C102MAAH
A6A9A1C37	0160-4441	1	1	CAPACITOR-FXO .47UF +-lo% 50VDC CER	04222	SR305C474KAAH
A6A9A1C38	0160-4084	a	1	CAP-FXO 0.1uF 50 V	56289	1C20X7R104M050B
A6A9A1C39	0180-2139	2	1	CAP-FXO 10uF 60 V UT-SLG-TA-ELCTLT	56289	109D106X0060C2-DYP
A6A9A1C40	0180-0500	7		CAPACITOR-FXO 47UF+-20% 20VOC TA	28480	0180-0500
A6A9A1C41	0180-0197	8	1	CAPACITOR-FXO 2.2UF+-10% 20VOC TA	56289	150D225X9020A2-DYS
A6A9A1C42	0160-4574	1	1	CAPACITOR-FXO 1000PF +-10% 100VDC CER	04222	SA101C102KAAH
A6A9A1C43	0160-4084	8	1	CAP-FXO 0.1uF 50 V	56289	1C20X7R104M050B
A6A9A1C44	0160-4835	7	1	CAPACITOR-FXO .1UF +-lo% 50VOC CER	04222	SA115C104KAAH
A6A9A1C45	0160-4574	1	1	CAPACITOR-FXO 1000PF +-lo% 100VDC CER	28480	0160-4574
A6A9A1C46	0160-0158	9	1	CAP-FXO 5600pF 200 V POLYE-FL	84411	HEW-238M

**Indicates factoyselected value*

HP Part Number 85660-60202

A6A9A1 Phase Lock Board

Reference Designation	HP Part Number	CD	Qty	Description	Mfr Code	Mfr Part Number
A6A9A1C48	0160-4084	8		CAPACITOR-FXO .1UF +-20% 50VOC CER	28480	0160-4084
A6A9A1C49	0160-3878	6	1	CAP-FXO 1000pF 100 V	04222	SR201C102MAAH
A6A9A1C50	0160-4801	7	2	CAPACITOR-FXO 100PF +-5% 100VDC CER	28480	0160-4801
A6A9A1C51	0160-4801	7	1	CAPACITOR-FXO 100PF +-5% 100VDC CER 0+-3	04222	SA102A101JAAH
A6A9A1C52	0160-4492	2	1	CAPACITOR-FXO 18PF +-5% 200VOC CER 0+-30		FD12C0G2D180J
A6A9A1C53	0160-4492	2	1	CAPACITOR-FXO 18PF +-5% 200VDC CER 0+-30		FD12C0G2D180J
A6A9A1C54	0160-3878	6	1	CAP-FXO 1000pF 100 V	04222	SR201C102MAAH
A6A9A1CR1	1901-0954	6	1	DIODE-CUR RGLTR 1N5285 270UA DO-7	04713	1N5285
A6A9A1CR2	1901-0050	3	1	DIODE-SWITCHING aov 200MA 2Ns Do-35	9N171	1N4150
A6A9A1CR3	1901-0050	3	1	DIODE-SWITCHING aov 200MA 2Ns Do-35	9N171	1N4150
A6A9A1CR4	1901-0518	8	1	DIODE-SCHOTTKY SM SIG		5082-2800
A6A9A1DS1				SEE A6A9DS1		
A6A9A1E3	1251-0600	C	1	CONNECTOR-SGL CONT PIN 1.14-MM-BSC-SZ SQ	27264	16-06-0034
A6A9A1E4	1251-0600	C	1	CONNECTOR-SGL CONT PIN 1.14-MM-BSC-SZ SQ	27264	16-06-0034
A6A9A1E5	1251-0600	C	1	CONNECTOR-SGL CONT PIN 1.14-MM-BSC-SZ SQ	27264	16-06-0034
A6A9A1E6	1251-0600	C	1	CONNECTOR-SGL CONT PIN 1.14-MM-BSC-SZ SQ	27264	16-06-0034
A6A9A1J4	1250-1538	3	1	CONNECTOR-RF SMB M PC 50-OHM	28480	1250-1538
A6A9A1L1	9135-0073	3	1	INDUCTOR RF-CH-ML0 51NH +-6.596% 2.6D-MM	06560	
A6A9A1L2	9140-0158	6	1	INDUCTOR RF-CH-ML0 1UH +-10% .105D-INX.2	32159	1A1002M +-lo%
A6A9A1L3	9140-0158	6	1	INDUCTOR RF-CH-ML0 1UH +-10% .105D-INX.2	32159	1A1002M +-10%
A6A9A1L4	9135-0073	3	1	INDUCTOR RF-CH-ML0 51NH +-6.596% 2.6D-MM	06560	
A6A9A1L5	9100-2248	5	1	INDUCTOR RF-CH-ML0 120NH +-lo% .105D-INX	24226	10M120K
A6A9A1L6	9140-0158	6		INDUCTOR RF-CH-ML0 1UH 10% .105DX.26LG	28480	9140-0158
A6A9A1L8	9100-2247	4	1	INDUCTOR RF-CH-ML0 100NH +-10% .105D-INX	24226	10M100K
A6A9A1L9	9100-2247	4	1	INDUCTOR RF-CH-ML0 100NH +-lo% .105D-INX	24226	10M100K
A6A9A1L10	9100-2251	C	1	INDUCTOR RF-CH-ML0 220NH +-10% .105D-INX	24226	10M220K
A6A9A1L11	85660-80012	4	1	COIL 24NH	28480	85660-80012
A6A9A1L12	9135-0068	6	1	INDUCTOR RF-CH-ML0 33NH +-6.36%	06560	
A6A9A1L13	9100-2255	4	1	INDUCTOR RF-CH-ML0 470NH +-10% .105D-INX	24226	10M470K
A6A9A1L19	9140-0142	8	1	INDUCTOR RF-CH-ML0 2.2UH +-10% .105D-INX	99800	1025-28
A6A9A1L20	1140-0142	B	1	:NOUCTOR RF-CH-ML0 2.2UH +-lo% .105D-INX	99800	1025-28
A6A9A1L21	)135-0068	6	1	:NOUCTOR RF-CH-ML0 33NH +-6.36%	06560	
A6A9A1Q1	.854-0696	2	1	'RANSISTOR NPN SI TO-72 PD=200MW	25403	
A6A9A1Q2	.854-0247	9	1	'RANSISTOR NPN SI TO-39 PD=1W FT=800MHZ	28480	1854-0247
A6A9A1Q3	.854-0295	7	1	'RANSISTOR-DUAL NPN PD=400MW	04713	
A6A9A1Q4	.854-0632	6	1	'RANSISTOR NPN SI PD=180MW FT=4GHZ	25403	BFR91
A6A9A1Q5	.853-0007	7	1	'RANSISTOR PNP 2N3251 SI TO-18 PD=360MW	04713	2N3251
A6A9A1Q6	.853-0007	7	1	'RANSISTOR PNP 2N3251 SI TO-18 PD=360MW	04713	2N3251
A6A9A1R1	)698-3447	4	1	!ESISTOR 422 1% .125W TF TC=O+-100	19701	SFR25H
A6A9A1R2	)698-3437	2	1	!ESISTOR 133 1% .125W TF TC=O+-100	19701	SFR25H
A6A9A1R3	)698-3431	6	1	!ESISTOR 23.7 1% .125W TF TC=O+-100	19701	SFR25H
A6A9A1R4	)757-0394	D	1	!ESISTOR 51.1 +-1% .125W TF TC=O+-100	19701	SFR25H
A6A9A1R5*	)757-0401	D	1	!ESISTOR 100 +-1% .125W TF TC=O+-100	19701	SFR25H
A6A9A1R6	)757-0421	4	1	!ESISTOR 825 +-1% .125W TF TC=O+-100	19701	SFR25H
A6A9A1R7	)757-0402	1	1	!ESISTOR 110 +-1% .125W TF TC=O+-100	19701	SFR25H
A6A9A1R8	)698-3431	6	1	!ESISTOR 23.7 1% .125W TF TC=O+-100	19701	SFR25H
A6A9A1R9	)757-0401	D	1	!ESISTOR 100 +-1% .125W TF TC=O+-100	19701	SFR25H
A6A9A1R10*	)757-0280	3	1	!ESISTOR 1K 1% .125W F TC=O+-100	24546	C4-1/8-TO-1001-F

Indicates factory-selected value

HP Part Number 85660-60202

A6A9A1 Phase Lock Board

Reference Designation	HP Part Number	C D	Qty	Description	Mfr Code	Mfr Part Number
A6A9A1R11	2100-2574	3	1	RESISTOR-TRMR 500 lo% TKF SIDE-AOJ l-TRN	73138	82PAR500
A6A9A1R12	0757-0394	(	1	RESISTOR 51.1 +-1% .125W TF TC=O+-100	19701	SFR25H
A6A9A1R13	0757-0401	(	1	RESISTOR 100 +-1% .125W TF TC=O+-100	19701	SFR25H
A6A9A1R14	0757-0402	l	1	RESISTOR 110 +-1% .125W TF TC=O+-100	19701	SFR25H
A6A9A1R15	0757-0394	(		RESISTOR 51.1 1% .125W F TC=O+-100	24546	C4-1/8-TO-51R1-F
A6A9A1R16	0698-3136	8	1	RESISTOR 17.8K 1% .125W TF TC=O+-100	19701	SFR25H
A6A9A1R17	0698-3136	8	1	RESISTOR 17.8K 1% .125W TF TC=O+-100	19701	SFR25H
A6A9A1R18	0757-0416	i	1	RESISTOR 511 +-1% .125W TF TC=O+-100	19701	SFR25H
A6A9A1R19	0757-0417	8	1	RESISTOR 562 +-1% .125W TF TC=O+-100	19701	SFR25H
A6A9A1R20	0757-0438	3	1	RESISTOR 5.11K +-1% .125W TF TC=O+-100	19701	SFR25H
A6A9A1R21	0698-3452	l	1	RESISTOR 147K 1% .125W TF TC=O+-100	19701	SFR25H
A6A9A1R22	0757-0442	c	1	RESISTOR 10K +-1% .125W TF TC=O+-100	19701	SFR25H
A6A9A1R23	0757-0442	c	1	RESISTOR 10K +-1% .125W TF TC=O+-100	19701	SFR25H
A6A9A1R24	0698-3162	(	1	RESISTOR 46.4K 1% .125W TF TC=O+-100	19701	SFR25H
A6A9A1R25	0757-0442	c	1	RESISTOR 10K +-1% .125W TF TC=O+-100	19701	SFR25H
A6A9A1R26	0698-7421	2	1	RESISTOR 40K +-0.25% .125W TF TC=O+-100	19701	5033R
A6A9A1R27*	0757-0459	8	1	RESISTOR 56.2K +-1% .125W TF TC=O+-100	19701	SFR25H
A6A9A1R28	0698-3459	8	1	RESISTOR 383K 1% .125W TF TC=O+-100	19701	SFR25H
A6A9A1R29	0757-0465	6	1	RESISTOR 100K +-1% .125W TF TC=O+-100	19701	SFR25H
A6A9A1R30	0757-0463	4	1	RESISTOR 82.5K +-1% .125W TF TC=O+-100	19701	SFR25H
A6A9A1R31	0757-0418	c	1	RESISTOR 619 +-1% .125W TF TC=O+-100	19701	SFR25H
A6A9A1R32	0757-0438	3	1	RESISTOR 5.11K +-1% .125W TF TC=O+-100	19701	SFR25H
A6A9A1R33	0757-0442	c	1	RESISTOR 10K +-1% .125W TF TC=O+-100	19701	SFR25H
A6A9A1R34	0757-0278	c	1	RESISTOR 1.78K +-1% .125W TF TC=O+-100	19701	SFR25H
A6A9A1R35	0757-0278	c	1	RESISTOR 1.78K +-1% .125W TF TC=O+-100	19701	SFR25H
A6A9A1R36	0757-0442	c	1	RESISTOR 10K +-1% .125W TF TC=O+-100	19701	SFR25H
A6A9A1R37	0757-0816	l	1	RESISTOR 681 +-1% .5W TF TC=O+-100	19701	5053R
A6A9A1R38	2100-1738	9	1	RESISTOR-TRMR 10K lo% C TOP-AOJ I-TRN	73138	82PR10K
A6A9A1R39	0757-0470	3	1	RESISTOR 162K +-1% .125W TF TC=O+-100	19701	SFR25H
A6A9A1R40	0757-0419	0	1	PESISTOR 681 +-1% .125W TF TC=O+-100	19701	SFR25H
A6A9A1R41	)757-0419	0	1	RESISTOR 681 +-1% .125W TF TC=O+-100	19701	SFR25H
A6A9A1T1	)8552-6044	1	1	TRANSFORMER, RF, 5-PIN	28480	08552-6044
A6A9A1T2	)8552-6044	1	1	TRANSFORMER, RF, 5-PIN	28480	08552-6044
A6A9A1U1	1813-0213	3	1	IC WIOEBANO AMPLIFIER TO-39 PKG (MUST BE ORDERED SEPARATELY)	04713	MWA130
A6A9A1U2	1813-0213	3	1	IC WIOEBANO AMPLIFIER TO-39 PKG (MUST BE ORDERED SEPARATELY)	04713	MWA130
A6A9A1U3	1826-0987	5	1	IC OP AMP PRCN B-DIP-C PKG	28480	1826-0987
A6A9A1U4	1826-0306	2	1	IC COMPARATOR GP QUAD 14-DIP-C PKG	27014	LM339AJ
A6A9A1VR1	1902-0041	4	1	)IODE-ZNR 5.11V 5% DO-35 PD=.4W	04713	
A6A9A1W1	1460-1489	8	1	WIREFORM BE CU AG	17450	

**Indicates factory-selected value*

HP Part Number 85660-60253

A6A9A1 Phase Lock Board

Reference Designation	HP Part Number	CD	Qty	Description	Mfr Code	Mfr Part Number
A6A9A1	85660-60253	3	1	PHASE LOCK BOARD ASSEMBLY (SERIAL PREFIX: 2504A)	28480	85660-60253
A6A9A1C1	0160-4835	7	1	CAPACITOR-FXD .1UF +-10% 50VDC CER	04222	SA115C104KAAH
A6A9A1C2	0160-4835	7	1	CAPACITOR-FXD .1UF +-10% 50VDC CER	04222	SA115C104KAAH
A6A9A1C3	0160-4574	1	1	CAPACITOR-FXD 1000PF +-10% 100VDC CER	04222	SA101C102KAAH
A6A9A1C4	0160-3874	2	1	CAPACITOR-FXD 10PF +-.5PF 200VDC CER		FD12C0G2D100D
A6A9A1C5	0160-3878	6	1	CAP-FXD 1000pF 100 V	04222	SR201C102MAAH
A6A9A1C6	0160-4084	8	1	CAP-FXD 0.1uF 50 V	56289	1C20X7R104M050B
A6A9A1C7	0160-3878	6	1	CAP-FXD 1000pF 100 V	04222	SR201C102MAAH
A6A9A1C8	0160-4494	4	1	CAPACITOR-FXD 39PF +-5% 200VDC CER O+-30		FD12C0G2D390J
A6A9A1C9	0160-4494	4	1	CAPACITOR-FXD 39PF +-5% 200VDC CER O+-30		FD12C0G2D390J
A6A9A1C10	0160-3878	6	1	CAP-FXD 1000pF 100 V	04222	SR201C102MAAH
A6A9A1C11	0160-3878	6	1	CAP-FXD 1000pF 100 V	04222	SR201C102MAAH
A6A9A1C12	0160-4385	2	1	CAP-FXD 15pF 200 V		RPE121-105C0G150J200V
A6A9A1C13	0160-3878	6	1	CAP-FXD 1000pF 100 V	04222	SR201C102MAAH
A6A9A1C14	0160-3878	6	1	CAP-FXD 1000pF 100 V	04222	SR201C102MAAH
A6A9A1C16	0160-3878	6	1	CAP-FXD 1000pF 100 V	04222	SR201C102MAAH
A6A9A1C17	0160-3878	6	1	CAP-FXD 1000pF 100 V	04222	SR201C102MAAH
A6A9A1C18	0160-3878	6	1	CAP-FXD 1000pF 100 V	04222	SR201C102MAAH
A6A9A1C19	0160-4387	4	1	CAPACITOR-FXD 47PF +-5% 200VDC CER O+-30		FD12C0G2D470J
A6A9A1C20	0160-4350	1	1	CAP-FXD 68pF 200 V		FD12C0G2D680J
A6A9A1C21	0180-0500	7	1	CAP-FXD 47uF 20 V TA	56289	19901114
A6A9A1C22	0160-4387	4	1	CAPACITOR-FXD 47PF +-5% 200VDC CER O+-30		FD12C0G2D470J
A6A9A1C23	0160-4574	1	1	CAPACITOR-FXD 1000PF +-10% 100VDC CER	04222	SA101C102KAAH
A6A9A1C24	0160-3875	3	1	CAPACITOR-FXD 22PF +-5% 200VDC CER O+-30		FD12C0G2D220J
A6A9A1C26	0160-3878	6	1	CAP-FXD 1000pF 100 V	04222	SR201C102MAAH
A6A9A1C29	0121-0452	4	1	CAPACITOR-V TRMR-AIR 1.3-5.4PF 175V PC-M	74970	187-0103-028
A6A9A1C30	0160-4492	2	1	CAPACITOR-FXD 18PF +-5% 200VDC CER O+-30		FD12C0G2D180J
A6A9A1C31	0160-4084	8	1	CAP-FXD 0.1uF 50 V	56289	1C20X7R104M050B
A6A9A1C32	0160-4389	6	1	CAP-FXD 100pF 200 V	04222	SR202A101JAAH
A6A9A1C33	0160-4383	0	1	CAPACITOR-FXD 6.8PF +-.5PF 200VDC CER		FD12C0G2D6R8D
A6A9A1C34	0160-3878	6	1	CAP-FXD 1000pF 100 V	04222	SR201C102MAAH
A6A9A1C35	0160-3878	6	1	CAP-FXD 1000pF 100 V	04222	SR201C102MAAH
A6A9A1C36	0160-3878	6	1	CAP-FXD 1000pF 100 V	04222	SR201C102MAAH
A6A9A1C37	0160-4441	1	1	CAPACITOR-FXD .47UF +-10% 50VDC CER	04222	SR305C474KAAH
A6A9A1C38	0160-4084	8	1	CAP-FXD 0.1uF 50 V	56289	1C20X7R104M050B
A6A9A1C39	0180-2139	2	1	CAP-FXD 10uF 60 V UT-SLG-TA-ELCTLT	56289	109D106X0060C2-DYP
A6A9A1C40	0180-0229	7	1	CAP-FXD 33uF 10 V TA	56289	150D336X9010B2-DYS
A6A9A1C41	3180-0197	8	1	CAPACITOR-FXD 2.2UF+-10% 20VDC TA	56289	150D225X9020A2-DYS
A6A9A1C42	0160-4574	1	1	CAPACITOR-FXD 1000PF +-10% 100VDC CER	04222	SA101C102KAAH
A6A9A1C43	0160-4084	8	1	CAP-FXD 0.1uF 50 V	56289	1C20X7R104M050B
A6A9A1C44	0160-4835	7	1	CAPACITOR-FXD .1UF +-10% 50VDC CER	04222	SA115C104KAAH
A6A9A1C46	0160-0158	9	1	CAP-FXD 5600pF 200 V POLYE-FL	84411	HEW-238M
A6A9A1C49	3160-3878	6	1	CAP-FXD 1000pF 100 V	04222	SR201C102MAAH
A6A9A1C50	0160-3879	7	1	CAPACITOR-FXD .01UF +-20% 100VDC CER	04222	SR201C103MAAH
A6A9A1C51	3160-4801	7	1	CAPACITOR-FXD 100PF +-5% 100VDC CER	04222	SA102A101JAAH
A6A9A1C52	0160-4492	2	1	CAPACITOR-FXD 18PF +-5% 200VDC CER O+-30		FD12C0G2D180J

**Indicates factory-selected value*

HP Part Number 85660-60253

A6A9A1 Phase Lock Board

Reference Designation	HP Part Number	C. D	Qty	Description	Mfr Code	Mfr Part Number
A6A9A1C53	0160-4492	2	1	CAPACITOR-FXD 18PF +-5% 200VDC CER 0+-30		FD12C0G2D180J
A6A9A1C54	0160-3878	6	1	CAP-FXD 1000pF 100 V	04222	SR201C102MAAH
A6A9A1CR1	1901-0954	6	1	DIODE-CUR RGLTR 1N5285 270UA DO-7	0471:	1N5285
A6A9A1CR2	1901-0050	3	1	DIODE-SWITCHING 80V 200MA 2NS DO-35	9N171	1N4150
A6A9A1CR3	1901-0050	3	1	DIODE-SWITCHING 80V 200MA 2NS DO-35	9N171	1N4150
A6A9A1CR4	1901-0518	8	1	DIODE-SCHOTTKY SM SIG		5082-2800
A6A9A1DS1	1990-0485	5	1	LED-LAMP LUM-INT=2MCD IF=30MA-MAX BVR=5V	2848C	HLMP-1503
A6A9A1E3	1251-0600	C	1	CONNECTOR-SGL CONT PIN 1.14-MM-BSC-SZ SQ	27264	16-06-0034
A6A9A1E4	1251-0600	C	1	CONNECTOR-SGL CONT PIN 1.14-MM-BSC-SZ SQ	27264	16-06-0034
A6A9A1E5	1251-0600	C	1	CONNECTOR-SGL CONT PIN 1.14-MM-BSC-SZ SQ	27264	16-06-0034
A6A9A1E6	1251-0600	C	1	CONNECTOR-SGL CONT PIN 1.14-MM-BSC-SZ SQ	27264	16-06-0034
A6A9A1J4	1250-2192	7	1	CONNECTOR-RF M SMB	98291	051-051-0409-220
A6A9A1L1	3135-0073	3	1	INDUCTOR RF-CH-MLD 51NH +-6.596% 2.6D-MM	06560	
A6A9A1L2	3140-0158	6	1	INDUCTOR RF-CH-MLD 1UH +-10% .105D-INX.2	32159	1A1002M +-10%
A6A9A1L3	3140-0158	6	1	INDUCTOR RF-CH-MLD 1UH +-10% .105D-INX.2	32159	1A1002M +-10%
A6A9A1L4	3135-0073	3	1	INDUCTOR RF-CH-MLD 51NH +-6.596% 2.6D-MM	06560	
A6A9A1L5	3100-2248	5	1	INDUCTOR RF-CH-MLD 120NH +-10% .105D-INX	24226	10M120K
A6A9A1L6	3100-2251	0	1	INDUCTOR RF-CH-MLD 220NH +-10% .105D-INX	24226	10M220K
A6A9A1L8	9100-2247	4	1	INDUCTOR RF-CH-MLD 100NH +-10% .105D-INX	24226	10M100K
A6A9A1L9	9100-2247	4	1	INDUCTOR RF-CH-MLD 100NH +-10% .105D-INX	24226	10M100K
A6A9A1L10	9100-2251	0	1	INDUCTOR RF-CH-MLD 220NH +-10% .105D-INX	24226	10M220K
A6A9A1L11	35660-80012	4	1	INDUCTOR 24NH	28480	85660-80012
A6A9A1L12	9135-0068	6	1	INDUCTOR RF-CH-MLD 33NH +-6.36%	06560	
A6A9A1L13	9100-2255	4	1	INDUCTOR RF-CH-MLD 470NH +-10% .105D-INX	24226	10M470K
A6A9A1L19	9140-0142	8	1	INDUCTOR RF-CH-MLD 2.2UH +-10% .105D-INX	99800	1025-28
A6A9A1L20	9140-0142	8	1	INDUCTOR RF-CH-MLD 2.2UH +-10% .105D-INX	99800	1025-28
A6A9A1L21	9135-0068	6	1	INDUCTOR RF-CH-MLD 33NH +-6.36%	06560	
A6A9A1MP1				NOT ASSIGNED		
A6A9A1MP3	1251-2194	1	3	CONNECTOR-SGL CONT SKT .021-IN-BSC-SZ	00779	3-331272-O
A6A9A1MP4	0590-0519	7	1	THREADED INSERT-NUT 4-40 .062-IN-LG STL	46384	KF2-440-ET
A6A9A1MP5	1151-0013	4	1	WIRE 22AWG 1X22	92194	298
A6A9A1Q1	1854-0696	2	1	TRANSISTOR NPN SI TO-72 PD=200MW	25403	
A6A9A1Q2	1854-0378	7	1	TRANSISTOR NPN 2N5109 SI TO-39 PD=800MW	04713	2N5109
A6A9A1Q3	1854-0295	7	1	TRANSISTOR-DUAL NPN PD=400MW	04713	
A6A9A1Q4	1854-0632	6	1	TRANSISTOR NPN SI PD=180MW FT=4GHZ	25403	BFR91
A6A9A1Q5	1853-0007	7	1	TRANSISTOR PNP 2N3251 SI TO-18 PD=360MW	04713	213251
A6A9A1Q6	1853-0007	7	1	TRANSISTOR PNP 2N3251 SI TO-18 PD=360MW	04713	2N3251
A6A9A1R1	1698-3447	4	1	RESISTOR 422 1% .125W TF TC=0+-100	19701	SFR25H
A6A9A1R2	1698-3437	2	1	RESISTOR 133 1% .125W TF TC=0+-100	19701	SFR25H
A6A9A1R3	1698-3431	5	1	RESISTOR 23.7 1% .125W TF TC=0+-100	19701	SFR25H
A6A9A1R4	1757-0394	3	1	RESISTOR 51.1 +-1% .125W TF TC=0+-100	19701	SFR25H
A6A9A1R5*	1757-0401	0	1	RESISTOR 100 +-1% .125W TF TC=0+-100	19701	SFR25H
A6A9A1R6	1757-0421	4	1	RESISTOR 825 +-1% .125W TF TC=0+-100	19701	SFR25H
A6A9A1R7	1757-0402	1	1	RESISTOR 110 +-1% .125W TF TC=0+-100	19701	SFR25H
A6A9A1R8	1698-3431	5	1	RESISTOR 23.7 1% .125W TF TC=0+-100	19701	SFR25H
A6A9A1R9	1757-0401	0	1	RESISTOR 100 +-1% .125W TF TC=0+-100	19701	SFR25H
A6A9A1R10*	1757-0424	7	1	RESISTOR 1.1K +-1% .125W TF TC=0+-100	19701	SFR25H
A6A9A1R11	1loo-2574	3	1	RESISTOR-TRMR 500 10% TKF SIDE-ADJ 1-TRN	73138	82PAR500

Indicates factory-selected value

HP Part Number 85660-60253

A6A9A1 Phase Lock Board

Reference Designation	HP Part Number	CD	Qty	Description	Mfr Code	Mfr Part Number
A6A9A1R12	0757-0394	0	1	RESISTOR 51.1 +-1% .125W TF TC=0+-100	19701	SFR25H
A6A9A1R13	0757-0401	0	1	RESISTOR 100 +-1% .125W TF TC=0+-100	19701	SFR25H
A6A9A1R14	0757-0402	1	1	RESISTOR 110 +-1% .125W TF TC=0+-100	19701	SFR25H
A6A9A1R15	0698-3435	0	1	RESISTOR 38.3 1% .125W TF TC=0+-100	19701	SFR25H
A6A9A1R16	0698-3136	8	1	RESISTOR 17.8K 1% .125W TF TC=0+-100	19701	SFR25H
A6A9A1R17	0698-3136	8	1	RESISTOR 17.8K 1% .125W TF TC=0+-100	19701	SFR25H
A6A9A1R18	0757-0416	7	1	RESISTOR 511 +-1% .125W TF TC=0+-100	19701	SFR25H
A6A9A1R19	0757-0417	8	1	RESISTOR 562 +-1% .125W TF TC=0+-100	19701	SFR25H
A6A9A1R20	0757-0438	3	1	RESISTOR 5.11K +-1% .125W TF TC=0+-100	19701	SFR25H
A6A9A1R21	0698-3452	1	1	RESISTOR 147K 1% .125W TF TC=0+-100	19701	SFR25H
A6A9A1R22	0757-0442	9	1	RESISTOR 10K +-1% .125W TF TC=0+-100	19701	SFR25H
A6A9A1R23	0757-0442	9	1	RESISTOR 10K +-1% .125W TF TC=0+-100	19701	SFR25H
A6A9A1R24	0698-3162	0	1	RESISTOR 46.4K 1% .125W TF TC=0+-100	19701	SFR25H
A6A9A1R25	0757-0442	9	1	RESISTOR 10K +-1% .125W TF TC=0+-100	19701	SFR25H
A6A9A1R26	0698-7421	2	1	RESISTOR 40K +-0.25% .125W TF TC=0+-100	19701	5033R
A6A9A1R27	0757-0459	8	1	RESISTOR 56.21: +-1% .125W TF TC=0+-100	19701	SFR25H
A6A9A1R28	0698-3459	8	1	RESISTOR 383K 1% .125W TF TC=0+-100	19701	SFR25H
A6A9A1R29	0757-0465	6	1	RESISTOR 100K +-1% .125W TF TC=0+-100	19701	SFR25H
A6A9A1R30	0757-0463	4	1	RESISTOR 82.51: +-1% .125W TF TC=0+-100	19701	SFR25H
A6A9A1R31	0757-0418	9	1	RESISTOR 619 +-1% .125W TF TC=0+-100	19701	SFR25H
A6A9A1R32	0757-0438	3	1	RESISTOR 5.11K +-1% .125W TF TC=0+-100	19701	SFR25H
A6A9A1R33	0757-0442	9	1	RESISTOR 10K +-1% .125W TF TC=0+-100	19701	SFR25H
A6A9A1R34	0757-0278	9	1	RESISTOR 1.78K +-1% .125W TF TC=0+-100	19701	SFR25H
A6A9A1R35	0757-0278	9	1	RESISTOR 1.78K +-1% .125W TF TC=0+-100	19701	SFR25H
A6A9A1R36	0757-0442	9	1	RESISTOR 10K +-1% .125W TF TC=0+-100	19701	SFR25H
A6A9A1R37	0757-0816	1	1	RESISTOR 681 +-1% .5W TF TC=0+-100	19701	5053R
A6A9A1R38	2100-4184	5	1	RESISTOR-TRMR 10K 10% TKF TOP-ADJ 1-TRN	32997	3329H-EG9-103
A6A9A1R39	0757-0470	3	1	RESISTOR 162K +-1% .125W TF TC=0+-100	19701	SFR25H
A6A9A1R40	0757-0419	0	1	RESISTOR 681 +-1% .125W TF TC=0+-100	19701	SFR25H
A6A9A1R41	0757-0419	0	1	RESISTOR 681 +-1% .125W TF TC=0+-100	19701	SFR25H
A6A9A1R42	0757-0123	3	1	RESISTOR 34.8K +-1% .125W TF TC=0+-100	19701	SFR25H
A6A9A1T1	08552-6044	1	1	TRANSFORMER RF 5-PIN	28480	08552-6044
A6A9A1T2	08552-6044	1	1	TRANSFORMER RF 5-PIN	28480	08552-6044
A6A9A1U1	1813-0213	3	1	IC WIDE BAND AMPLIFIER TO-39 PKG (MUST BE ORDERED SEPARATELY)	04713	MWA130
A6A9A1U2	1813-0213	3	1	IC WIDE BAND AMPLIFIER TO-39 PKG (MUST BE ORDERED SEPARATELY)	04713	MWA130
A6A9A1U3	1826-1049	2	1	IC OP AMP PRCN 8-DIP-C PKG	06665	OP-27GZ
A6A9A1U4	1826-0306	2	1	IC COMPARATOR GP QUAD 14-DIP-C PKG	27014	LM339AJ
A6A9A1VR1	1902-0041	4	1	DIODE-ZNR 5.11V 5% DO-35 PD=.4W	04713	
A6A9A1W1	1460-1489	8	1	WIREFORM BE CU AG	17450	

**Indicates factory-selected value*

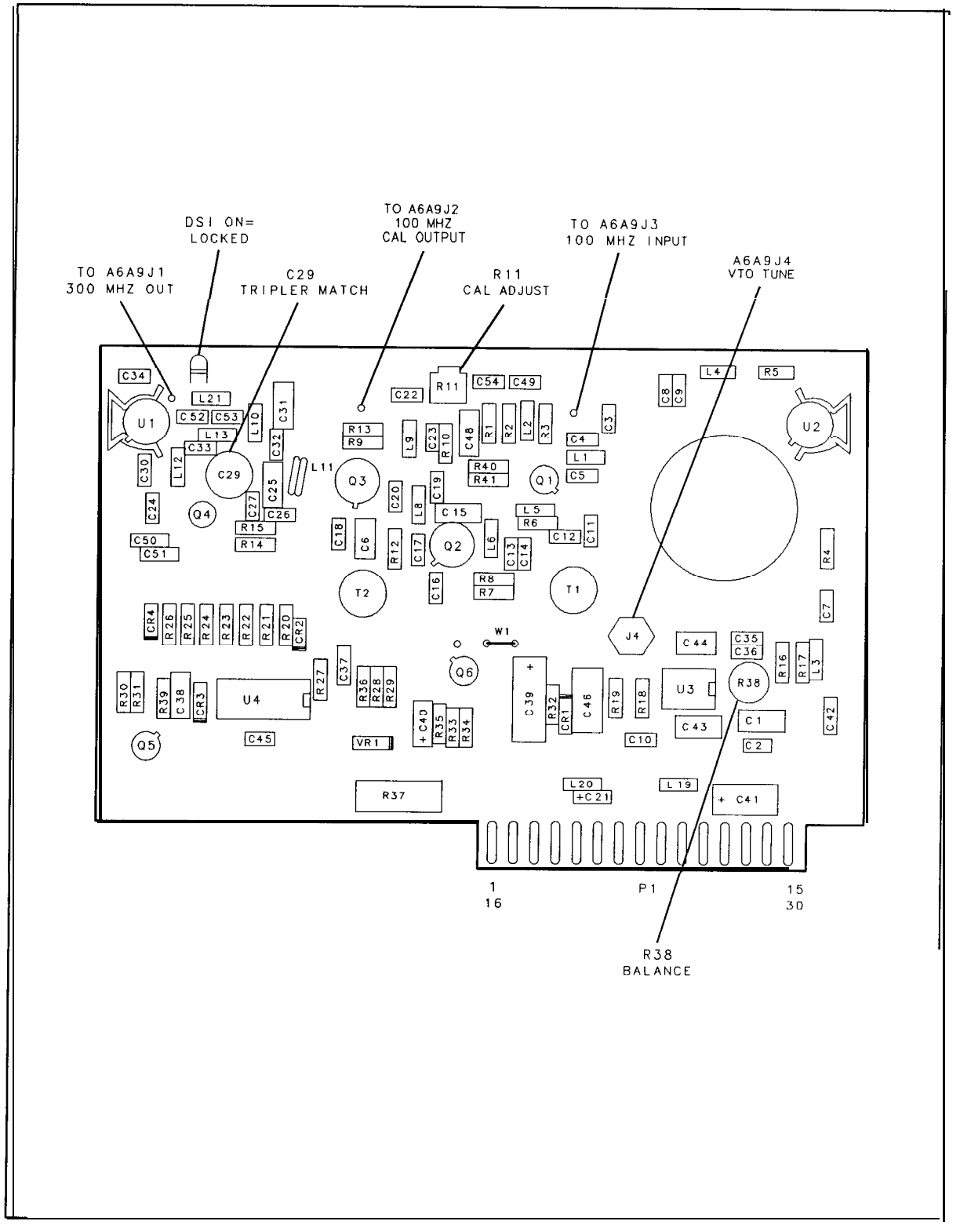

A6A9A1 Phase Lock Board Component Locations, 85660-60202

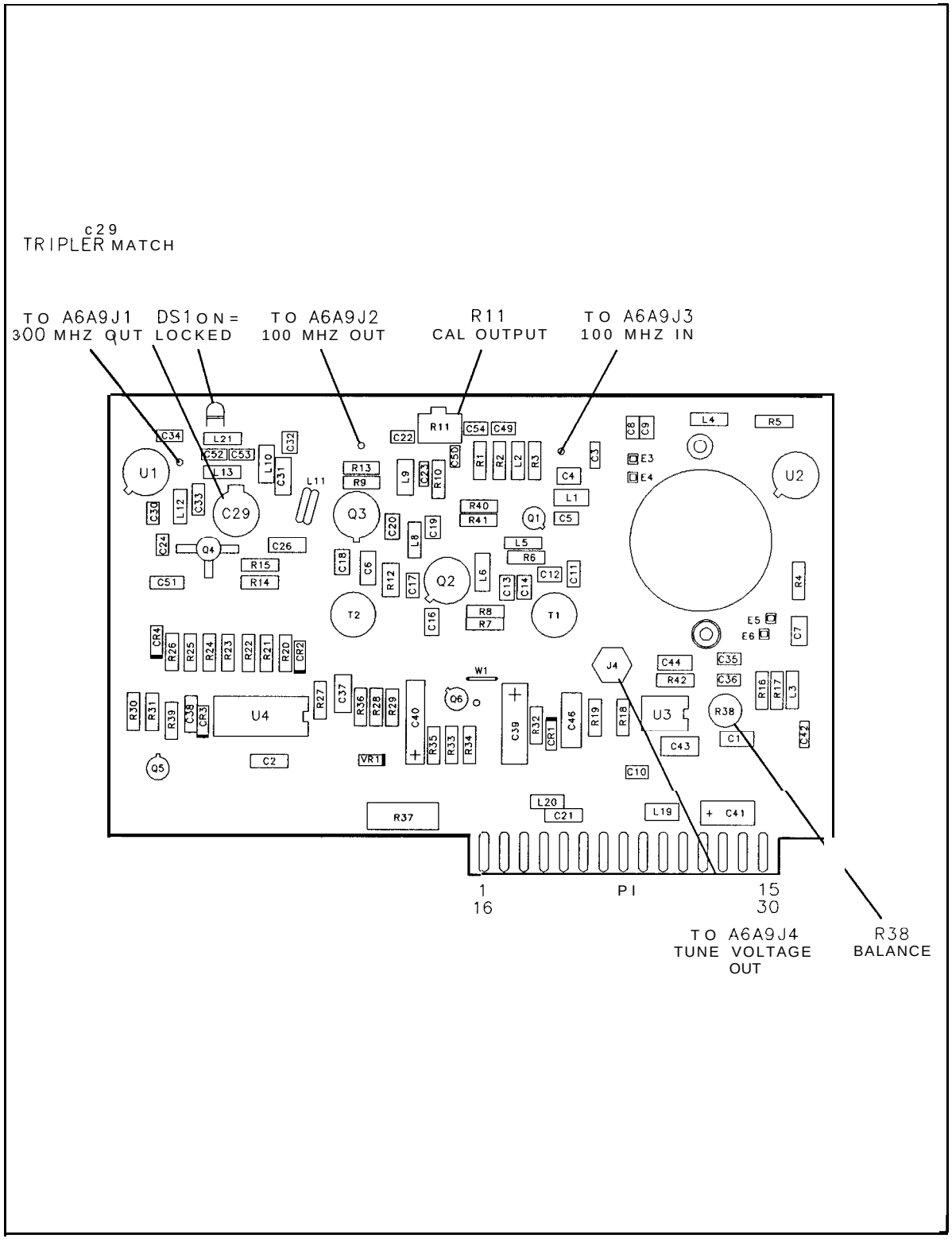

A6A9A1 Phase Lock Board Component Locations, 85660-60253

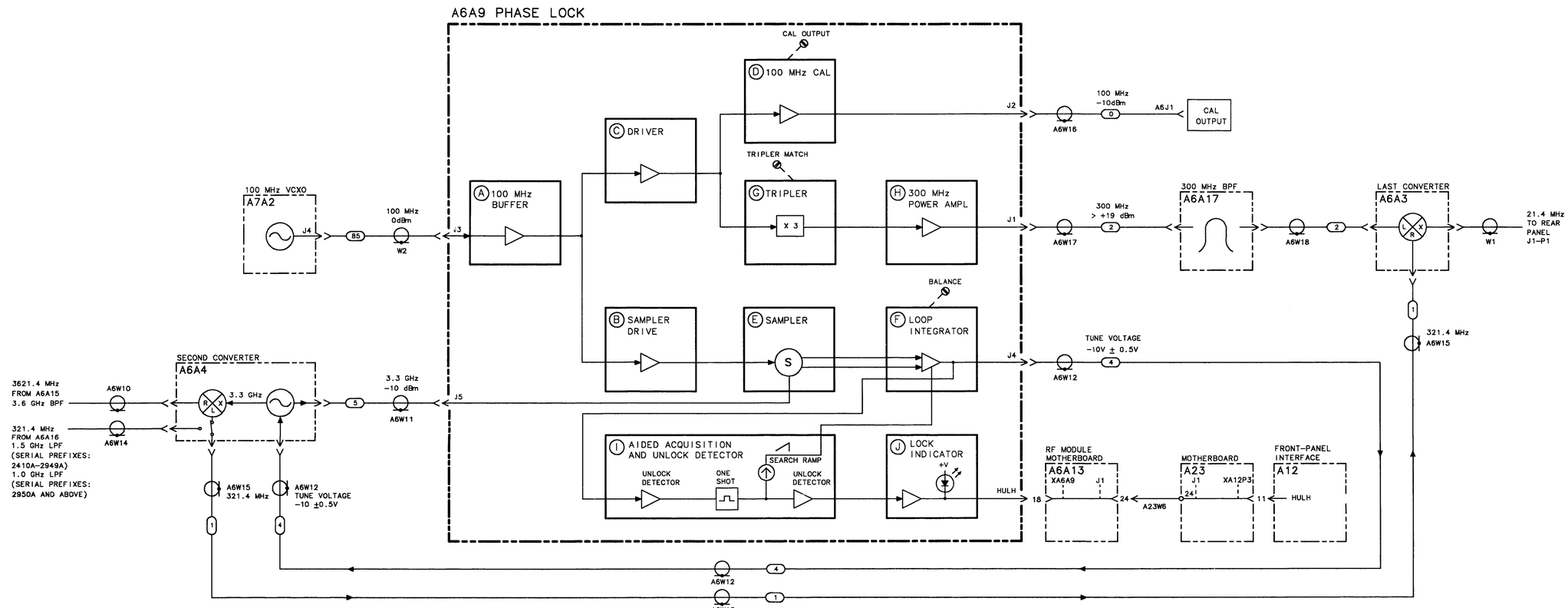

A6A9 PHASE LOCK, BLOCK DIAGRAM

A6A9 PHASE LOCK
85660-60226
(SERIAL PREFIXES:
2410A-2503A)

A1 PHASE LOCK
85660-60202

P1

PIN	SIGNAL	TO/FROM	FUNCTION BLOCK
1	GND		K
16	GND		K
2	GND		K
17	GND		K
3	GND		K
18	HULH	A12P3-11	J
4	GND		K
19	-9V	A6A12P1-4	K
5	GND		K
20	NC		
6	GND		K
21	PIN	A6A10P1-35	I
7	GND		K
22	+20V		K
8	GND		K
23	-10V		K
9	GND		K
24	NC		
10	GND		K
25	-40V		K
11	GND		K
26	+5.2V		K
12	GND		K
27	NC		
13	GND		K
28	NC		
14	GND		K
29	NC		
15	GND		K
30	NC		

Ⓐ 100 MHZ BUFFER AMPLIFIER

Ⓑ SAMPLER DRIVER

Ⓒ DRIVER

Ⓓ 100 MHZ CALIBRATOR

Ⓔ SAMPLER

SAMPLER BOARD

Ⓕ LOOP INTEGRATOR

Ⓖ TRIPLER

Ⓗ 300 MHZ POWER AMPLIFIER

Ⓘ AIDED ACQUISITION AND UNLOCK DETECTOR

NEG RAIL DETECTOR | ONE SHOT | SWITCH | UNLOCK DETECTOR

Ⓙ LOCK INDICATOR

Ⓚ POWER SUPPLIES

P1-26 +45.2V
P1-22 +20V
P1-23 -10V
P1-19 -9V
P1-25 -40V
P1-1-17 GND

+5VF1, +5VF2, -10VF, -9VF

VR1 5.11V

CABLE A3, AEW16
100 MHZ
+10 DBM ±.05 DB
TO A3
FRONT PANEL
CAL OUTPUT

CABLE 2, AEW17
300 MHZ
+10 DBM
TO A8A1
300 MHZ RPF

CABLE 6, AEW12
TUNE VOLTAGE
-10 TO 10V
TO A8A1
SECOND CONV.

CABLE A5, AEW11
2.5 GHZ -10 DBM
FROM A8A1
SECOND CONVERTER

CABLE A3, AEW13
100 MHZ
0 DBM
FROM A7A2
100 MHZ
VCXO

DS1
LOCK
INDICATOR

P1-18
HULH

P1-21
PIN

SHIELD

NOTES:

1. REFERENCE DESIGNATORS WITHIN THIS ASSEMBLY ARE ABBREVIATED. FOR ACCESS, ADD A DESIGNATION PREFIX ABBREVIATION WITH ASSEMBLY DESIGNATION.
2. UNLESS OTHERWISE INDICATED: RESISTANCE IS IN OHMS (Ω), CAPACITANCE IS IN MICROFARADS(μF) INDUCTANCE IS IN MICROHENRIES(μH)
3. UNLESS OTHERWISE INDICATED, SIGNALS ENTER AT THE LEFT AND EXIT AT RIGHT SIDE OF FUNCTION BLOCKS.
4. MNEMONIC TABLE:

MNEMONIC	DESCRIPTION
HULH	HIGH=HETERODYNE OSCILLATOR UNLOCKED

5. CR1 IS A CURRENT REGULATOR DIODE. IT FUNCTIONS AS A CONSTANT CURRENT SOURCE.
6. W1 IS USED TO JUMPER PIN 4 OF U4A TO -25VF FOR TROUBLESHOOTING.
7. R27 IS CHANGED TO A 10K RESISTOR WHEN USING THIS ASSEMBLY IN AN 8566A.
8. R5* IS A FACTORY-SELECTED COMPONENT. ACCEPTABLE VALUES RANGE FROM 23.7Ω TO 180Ω.
9. R10* IS A FACTORY-SELECTED COMPONENT. THE FOLLOWING ALTERNATE HP PART NUMBERS AND VALUES MAY BE USED:

HP PART NUMBER	VALUE
0757-0422	909Ω
0757-0424	1.1KΩ
0757-0274	1.21KΩ

A6A9

A6A9 PHASE LOCK, SCHEMATIC DIAGRAM

A6A9 PHASE LOCK
85660-60256
(SERIAL PREFIX: 2504A)

A1 PHASE LOCK
85660-60253

P1

PIN	SIGNAL	TO/FROM	FUNCTION BLOCK
1	GND		K
16	GND		K
2	GND		K
17	GND		K
3	GND		K
18	HULH	A12P3-11	J
4	GND		K
19	-9V		NC
5	GND		K
20	NC		
6	GND		K
21	PIN	A6A10P1-35	I
7	GND		K
22	+20V		K
8	GND		K
23	-10V		K
9	GND		K
24	GND		NC
10	GND		K
25	-40V		K
11	GND		K
26	+5.2V		K
12	GND		K
27	NC		
13	GND		K
28	NC		
14	GND		K
29	NC		
15	GND		K
30	NC		

Ⓚ POWER SUPPLIES

Ⓐ 100 MHZ BUFFER AMPLIFIER

Ⓒ DRIVER

Ⓓ 100 MHZ CALIBRATOR

Ⓖ TRIPLER

Ⓗ 300 MHZ POWER AMPLIFIER

Ⓑ SAMPLER DRIVER

SAMPLER BOARD

Ⓔ SAMPLER

Ⓕ LOOP INTEGRATOR

Ⓘ AIDED ACQUISITION AND UNLOCK DETECTOR

Ⓙ LOCK INDICATOR

NEG RAIL DETECTOR — ONE SHOT — SWITCH — UNLOCK DETECTOR

SHIELD

CABLE 6, ASW16
100 MHZ
-10 DBM ± .05 DB
TO A5
FRONT PANEL
CAL OUTPUT

CABLE 2, ASW17
300 MHZ
+19 DBM
TO A6A17
300 MHZ BPF

CABLE 4, ASW12
TUNE VOLTAGE
TO A6A4
SECOND CONV.

CABLE 5, ASW11
3.3 GHZ -10 DBM
FROM A6A4
SECOND CONVERTER

CABLE 3, ASW15
80.1304 MHZ
0 DBM
FROM A7A2
100 MHZ
VCXO

NOTES:

1. REFERENCE DESIGNATORS WITHIN THIS ASSEMBLY ARE ABBREVIATED. FOR COMPLETE REFERENCE DESIGNATION, PREFIX ABBREVIATION WITH ASSEMBLY DESIGNATION.
2. UNLESS OTHERWISE INDICATED: RESISTANCE IS IN OHMS (Ω). CAPACITANCE IS IN MICROFARADS (μF) INDUCTANCE IS IN MICROHENRIES (μH)
3. UNLESS OTHERWISE INDICATED: SIGNALS ENTER AT LEFT SIDE AND EXIT AT RIGHT SIDE OF FUNCTION BLOCKS.
4. MNEMONIC TABLE:

MNEMONIC	DESCRIPTION
HULH	HIGH=HETERODYNE OSCILLATOR UNLOCKED

5. CR1 IS A CURRENT REGULATOR DIODE. IT FUNCTIONS AS A CONSTANT CURRENT SOURCE.
6. W1 IS USED TO JUMPER PIN 4 OF U4A TO -25VF FOR TROUBLESHOOTING.
7. R27 IS CHANGED TO A 10K RESISTOR WHEN USING THIS ASSEMBLY IN AN 8566A.
8. R5* IS A FACTORY-SELECTED COMPONENT. ACCEPTABLE VALUES RANGE FROM 23.7Ω TO 180Ω.
9. R10* IS A FACTORY-SELECTED COMPONENT. THE FOLLOWING ALTERNATE HP PART NUMBERS AND VALUES MAY BE USED.

HP PART NUMBER	VALUE
0757-0422	909Ω
0757-0424	1.1kΩ
0757-0274	1.21kΩ

A6A9

A6A10

A6A10 Miscellaneous Bias/Relay Driver, Circuit Description

This assembly is a collection of circuits necessary for proper operation of other assemblies in the A6 RF Module. It contains nine circuits:

1. YTX Diode Bias
2. YTX Linearity Correction
3. 3.3 GHz Oscillator Driver
4. PIN Switch Driver
5. Band Step Gains
6. RF Switch Driver
7. RF Attenuator Driver
8. j-22 V Delay
9. Power Down

YTX Diode Bias Ⓖ

To maintain the precise diode bias across the YTX mixer diode, the effects of series resistance between the bias circuit and the diode must be eliminated. To do this, a negative impedance voltage source U2 is used.

Voltage bias to the YTX diode is adjusted from band to band via R9, R12, R15, and R18. This voltage is applied to U2 via FET switches Q6, Q7, Q8, and Q10. U2 has both positive and negative feedback. The positive feedback is controlled by R43, R46, and R47, while the negative feedback is via R45. The fact that the positive feedback and the negative feedback are picked off across R44 causes a negative impedance at pin Pl-7 proportional to the amplifier gain and R44.

YTX Linearity Correction Ⓓ

Due to nonlinearities in the YTX magnet structure, some linearity correction must be made. This is accomplished by placing resistors in parallel with the current-sense resistor in the YTX coil driver circuit. These parallel resistors increase the coil current slightly. For current compensation, both the point of compensation and the magnitude of compensation must be varied.

This is accomplished in the following manner using U7D as a typical circuit: U7D is an ideal zener circuit, that is, as long as the YTX linearity voltage is less negative than the voltage on U7 pin 12 (the positive op amp input) diode CR5 is reverse biased. In this state, the YTX linearity line sees a high impedance and no compensation occurs. When the YTX linearity voltage goes more negative than the bias on U7 pin 12, diode CR5 is forward biased and U7D

becomes a voltage follower maintaining the voltage at the cathode of CR5 at the same voltage as on U7 pin 12. In this situation, R32 and R31 are effectively in parallel with the current sense resistor of the coil driver circuit. R31 is used to adjust the magnitude of compensation, while R40 is used to adjust the frequency at which the compensation occurs. In a similar manner, U7A, B, C are used to correct for higher frequency nonlinearity.

PIN Switch Driver Ⓕ

The PIN switch driver converts the TTL logic level LO-BAND signal to the $20 V/−10 V signal required by the Second Converter. The TTL level at P1 to 34 is input to the base of Q21. A high at the base of Q21 turns Q21 on, turning on Q4, which pulls the collector of Q4 approximately +20 V. This turns on Q3, providing the +20 V signal to the PIN drive output, P1 to 35. A low input on the LO-BAND TTL input turns Q21 off, which turns Q4 off. The collector of Q4 then goes low, turning on Q2, and pulling the PIN drive line to -10 V.

3.3 GHz Oscillator Driver Ⓗ

The PIN drive signal is also used to turn the 3.3 GHz oscillator on in A-Band, and off in other bands. When the PIN drive goes high, Q1 is turned on which pulls its collector to -10 V. The -10 V is the negative bias for the 3.3 GHz oscillator. When the PIN drive goes low, Q1 is turned off, dropping the oscillator bias current to zero, which turns off the 3.3 GHz oscillator. In the on state, resistor R1 is used to adjust the oscillator bias current to 15 milliamps.

RF Switch Driver Ⓔ

The coaxial RF switch is driven by darlington amplifiers U5E, and U5F. A high input on the LO-BAND line drives the outputs of U5F low, and U5E high. A low output at U5F drives the Coaxial RF switch relay to the A-Band (0 to 2.5 GHz) position. The reverse occurs with a low input which drives U5E's output low, which forces the coaxial RF switch relay to the B-E Band (2 to 22 GHz) position.

Band Step Gains Ⓘ

To correct for different input mixer conversion efficiencies and gains in the individual frequency bands, the IF gain is changed. This is done in the A6A3 Last Converter by varying the current through PIN attenuator diodes in the 21.4 MHz amplifier. This current is controlled by Q12, Q14 to Q17, and Q19. In A-Band, the high output on the PIN drive line breaks down zener VR1 and turns on Q12. This applies -40 V to the potentiometer R21. Adjusting R21 varies the current in the step gain in A-Band.

The gain of A6A3 Last Converter is adjusted in each band as each transistor, Q12, Q14 to Q17, and Q19, is turned on for each individual band.

RF Attenuator Driver ©

The RF attenuator driver is similar to the RF Switch driver. The major difference is the logic decoding to the inputs of the darlington switch drivers. The input to the logic circuit is the standard 10, 20, 40, dB attenuation logic levels. The logic circuit U1 decodes this to the 10, 20, 20, 20, dB attenuation logic levels required to drive the RF attenuator. The output drivers consist of darlington amplifiers driven by the outputs of U1 or the inverted outputs of U1, via U3. A low output of a darlington turns that line on. That is, a low at U5D pin 13, coupled with high at U4F pin 11, enables the 10 dB attenuation position, and so forth.

Power Down Ⓐ

The power down circuit switches the RF attenuator into a 40 dB attenuation position to prevent accidental damage to A6A8 YTX or A6A6 First Converter from an input signal when the instrument is off. When the power up signal goes low, U3 pin 10 is driven high which turns on Q9 and Q13, forcing U1 pins 5,6, and 9, U4 pin 7, and U3 pin 5 high. This forces at least the last two 20 dB attenuation stages in the attenuator on.

+22 V Delay Ⓑ

On power up, the instrument goes through a self-check program. To prevent the RF relays and the attenuator from chattering during this time, the +22 V Bias to the attenuator and RF switch is delayed for about 2.5 seconds after the power up signal goes high. This delay is caused by R59 and C10. When power up goes high, it takes approximately 2.5 seconds for the voltage across C10 to charge up enough to turn on U3E. U3E output is inverted twice by the darlington amplifiers U4B and U4A so that when U3E output drops, U4A output also drops turning on Q11 which applies the +22 V to the relay circuits.

HP Part Number 85660-60180

A6A10 Miscellaneous Bias/Relay Driver

Reference Designation	HP Part Number	C. D	Qty	Description	Mfr Code	Mfr Part Number
A6A10	85660-60180		1	BOARD ASSEMBLY, MISC BIAS/RELAY DRIVER (SERIAL PREFIXES: 2410A - 2729A)	28480	85660-60180
A6A10C1	0160-2055		1	CAPACITOR-FXD .01UF +80-20% 100VDC CER		805-504 Y5V 1032
A6A10C2	0180-2206		1	CAPACITOR-FXD 60UF+-10% 6VDC TA	56289	150D606X9006B2-DYS
A6A10C3	0180-2208		1	CAPACITOR-FXD 220UF+-10% 10VDC TA	56289	150D227X9010S2-DYS
A6A10C4	0180-0116		1	CAPACITOR-FXD 6.8UF+-10% 35VDC TA	56289	150D685X9035B2-DYS
A6A10C5	0160-2055		1	CAPACITOR-FXD .01UF +80-20% 100VDC CER		805-504 Y5V 1032
A6A10C6	0160-4441		1	CAPACITOR-FXD .47UF +-10% 50VDC CER	04222	SR305C474KAAH
A6A10C7	0160-3879		1	CAPACITOR-FXD .01UF +-20% 100VDC CER	28480	0160-3879
A6A10C8	0180-0097		1	CAPACITOR-FXD 47UF+-10% 35VDC TA	56289	150D476X9035S2-DYS
A6A10C9	0160-4441		1	CAPACITOR-FXD .47UF +-10% 50VDC CER	04222	SR305C474KAAH
A6A10C10	0180-0228		1	CAPACITOR-FXD 22UF+-10% 15VDC TA	56289	150D226X9015B2-DYS
A6A10C11	0180-0116		1	CAPACITOR-FXD 6.8UF+-10% 35VDC TA	56289	150D685X9035B2-DYS
A6A10C12	0160-3879		1	CAPACITOR-FXD .01UF +-20% 100VDC CER	28480	0160-3879
A6A10C13	0180-0228		1	CAPACITOR-FXD 22UF+-10% 15VDC TA	56289	150D226X9015B2-DYS
A6A10C15	3180-0228		1	CAPACITOR-FXD 22UF+-10% 15VDC TA	56289	150D226X9015B2-DYS
A6A10CR1	1901-1067		1	DIODE-SWITCHING 125V 175MA 60NS DO-35	27014	FDH444
A6A10CR2	1901-1067		1	DIODE-SWITCHING 125V 175MA 60NS DO-35	27014	FDH444
A6A10CR3	1901-1067		1	DIODE-SWITCHING 125V 175MA 60NS DO-35	27014	FDH444
A6A10CR4	1901-1067		1	DIODE-SWITCHING 125V 175MA 60NS DO-35	27014	FDH444
A6A10CR5	1901-1067		1	DIODE-SWITCHING 125V 175MA 60NS DO-35	27014	FDH444
A6A10CR6	1901-1067		1	DIODE-SWITCHING 125V 175MA 60NS DO-35	27014	FDH444
A6A10CR7	1901-1067		1	DIODE-SWITCHING 125V 175MA 60NS DO-35	27014	FDH444
A6A10CR8	1901-0535		1	DIODE-SM SIG SCHOTTKY	28480	1901-0535
A6A10CR9	1901-0535		1	DIODE-SM SIG SCHOTTKY	28480	1901-0535
A6A10CR10	1901-1067		1	DIODE-SWITCHING 125V 175MA 60NS DO-35	27014	FDH444
A6A10CR11	1901-0535		1	DIODE-SM SIG SCHOTTKY	28480	1901-0535
A6A10CR12	1901-0535		1	DIODE-SM SIG SCHOTTKY	28480	1901-0535
A6A10CR13	1901-0535		1	DIODE-SCHDTTKY SM SIG		
A6A10CR14	1901-0535		1	DIODE-SCHOTTKY SM SIG		
A6A10CR15	1901-1067		1	DIODE-SWITCHING 125V 175MA 60NS DO-35	27014	FDH444
A6A10CR16	1901-0535		1	DIODE-SM SIG SCHOTTKY	28480	1901-0535
A6A10CR17	1901-0535		1	DIODE-SM SIG SCHDTTKY	28480	1901-0535
A6A10CR18	1901-1067		1	DIODE-SWITCHING 125V 175MA 60NS DO-35	27014	FDH444
A6A10CR19	1901-1067		1	DIODE-SWITCHING 125V 175MA 60NS DO-35	27014	FDH444
A6A10CR20	1901-1067		1	DIODE-SWITCHING 125V 175MA 60NS DO-35	27014	FDH444
A6A10CR21	1901-1067		1	DIODE-SWITCHING 125V 175MA 60NS DO-35	27014	FDH444
A6A10CR22	1901-1067		1	DIODE-SWITCHING 125V 175MA 60NS DO-35	27014	FDH444
A6A10CR23	1901-1067		1	DIODE-SWITCHING 125V 175MA 60NS DO-35	27014	FDH444
A6A10CR24	1901-1067		1	DIODE-SWITCHING 125V 175MA 60NS DO-35	27014	FDH444
A6A10CR25	1901-1067		1	DIODE-SWITCHING 125V 175MA 60NS DO-35	27014	FDH444
A6A10CR26	1901-1067		1	DIODE-SWITCHING 125V 175MA 60NS DO-35	27014	FDH444
A6A10CR27	1901-1067		1	DIODE-SWITCHING 125V 175MA 60NS DO-35	27014	FDH444
A6A10CR28	1901-1067		1	DIODE-SWITCHING 125V 175MA 60NS DO-35	27014	FDH444
A6A10MP2	1480-0073		2	PIN-ROLL .062-IN-DIA .25-IN-LG BE-CU	72962	99-012-062-0250
A6A10MP3	1040-0748		1	EXTR PC BD BLK	28480	4040-0748
A6A10MP4	1040-0749		1	EXTR PC BD BRN	28480	4040-0749

**Indicates factory-selected value*

HP Part Number 85660-60180

A6A10 Miscellaneous Bias/Relay Driver

Reference Designation	HP Part Number	C-D	Qty	Description	Mfr Code	Mfr Part Number
A6A10Q1	1854-0477	7	1	TRANSISTOR NPN 2N2222A SI TO-18 PD=500MW	0471:	2N2222A
A6A10Q2	1853-0281	C	1	TRANSISTOR PNP 2N2907A SI TO-18 PD=400MW	0471:	2N2907A
A6A10Q3	1854-0477	7	1	TRANSISTOR NPN 2N2222A SI TO-18 PD=500MW	0471:	2N2222A
A6A10Q4	1853-0281	C	1	TRANSISTOR PNP 2N2907A SI TO-18 PD=400MW	0471:	2N2907A
A6A10Q5	1854-0477	7	1	TRANSISTOR NPN 2N2222A SI TO-18 PD=500MW	0471:	2N2222A
A6A10Q6	1855-0420	2	1	TRANSISTOR J-FET 2N4391 N-CHAN D-MODE TO	17856	2N4391
A6A10Q7	1855-0420	2	1	TRANSISTOR J-FET 2N4391 N-CHAN D-MODE TO	17856	2N4391
A6A10Q8	1855-0420	2	1	TRANSISTOR J-FET 214391 N-CHAN D-MODE TO	17856	2N4391
A6A10Q9	1854-0477	7	1	TRANSISTOR NPN 2N2222A SI TO-18 PD=500MW	04713	2N2222A
A6A10Q10	1855-0420	2	1	TRANSISTOR J-FET 2N4391 N-CHAN D-MODE TO	17856	2N4391
A6A10Q11	1853-0213	7	1	TRANSISTOR PNP 2N4236 SI TO-5 PD=1W	04713	2N4236
A6A10Q12	1854-0477	7	1	TRANSISTOR NPN 2N2222A SI TO-18 PD=500MW	04713	2N2222A
A6A10Q13	1853-0281	9	1	TRANSISTOR PNP 2N2907A SI TO-18 PD=400MW	04713	2N2907A
A6A10Q14	1854-0477	7	1	TRANSISTOR NPN 2N2222A SI TO-18 PD=500MW	04713	2N2222A
A6A10Q15	1854-0477	7	1	TRANSISTOR NPN 2N2222A SI TO-18 PD=500MW	04713	2N2222A
A6A10Q16	1854-0477	7	1	TRANSISTOR NPN 2N2222A SI TO-18 PD=500MW	04713	2N2222A
A6A10Q17	1854-0477	7	1	TRANSISTOR NPN 2N2222A SI TO-18 PD=500MW	04713	2N2222A
A6A10Q18	1854-0477	7	1	TRANSISTOR NPN 2N2222A SI TO-18 PD=500MW	04713	2N2222A
A6A10Q19	1854-0477	7	1	TRANSISTOR NPN 2N2222A SI TO-18 PD=500MW	04713	2N2222A
A6A10Q20	1854-0477	7	1	TRANSISTOR NPN 2N2222A SI TO-18 PD=500MW	04713	2N2222A
A6A10Q21	1854-0472	2	1	TRANSISTOR NPN SI DARL PD=500MW	04713	MPS-A14
A6A10R1	2100-2574	3	1	IESISTOR-TRMR 500 10% TKF SIDE-ADJ 1-TRN	73138	82PAR500
A6A10R2	0698-7260	7	1	RESISTOR 10K +-1% .05W TF TC=O+-100	19701	50635
A6A10R3	0698-7260	7	1	RESISTOR 10K +-1% .05W TF TC=O+-100	19701	50635
A6A10R4	0698-7277	6	1	RESISTOR 51.1K +-1% .05W TF TC=O+-100	19701	5023R
A6A10R5	0698-7260	7	1	RESISTOR 10K +-1% .05W TF TC=O+-100	19701	50635
A6A10R6	0757-0346	2	1	RESISTOR 10 +-1% .125W TF TC=O+-100	91637	CMF-55-1, T-1
A6A10R7	0698-7243	6	1	RESISTOR 1.96K +-1% .05W TF TC=O+-100	19701	50635
A6A10R8	0698-7266	3	1	RESISTOR 17.8K +-1% .05W TF TC=O+-100	19701	50635
A6A10R9	2100-0545	4	1	IESISTOR-TRMR 1K 10% TKF SIDE-ADJ 17-TRN	73138	67XR
A6A10R10	0698-7281	2	1	RESISTOR 75K +-2% .05W TF TC=O+-100	19701	5023R
A6A10R11	0699-0127	3	1	RESISTOR 464K +-1% .05W TF TC=O+-100	11502	RG-1/8-T050
A6A10R12	2100-0545	4	1	RESISTOR-TRMR 1K 10% TKF SIDE-ADJ 17-TRN	73138	67XR
A6A10R13	0698-7281	2	1	RESISTOR 75K +-2% .05W TF TC=O+-100	19701	5023R
A6A10R14	0699-0127	3	1	RESISTOR 464K +-1% .05W TF TC=O+-100	11502	RG-1/8-T050
A6A10R15	2100-0545	4	1	RESISTOR-TRMR 1K 10% TKF SIDE-ADJ 17-TRN	73138	67XR
A6A10R16	0698-7281	2	1	RESISTOR 75K +-2% .05W TF TC=O+-100	19701	5023R
A6A10R17	0699-0127	3	1	RESISTOR 464K +-1% .05W TF TC=O+-100	11502	RG-1/8-T050
A6A10R18	2100-0545	4	1	IESISTOR-TRMR 1K 10% TKF SIDE-ADJ 17-TRN	73138	67XR
A6A10R19	0698-7281	2	1	RESISTOR 75K +-2% .05W TF TC=O+-100	19701	5023R
A6A10R20	0699-0127	3	1	RESISTOR 464K +-1% .05W TF TC=O+-100	11502	RG-1/8-T050
A6A10R21	2100-3611	1	1	RESISTOR-TRMR 50K 10% C SIDE-ADJ 17-TRN	32997	3292x-1-503
A6A10R22	0698-7260	7	1	RESISTOR 10K +-1% .05W TF TC=O+-100	19701	50635
A6A10R23	2100-3611	1	1	RESISTOR-TRMR 50K 10% C SIDE-ADJ 17-TRN	32997	3292x-1-503
A6A10R24	0698-7260	7	1	ESISTOR 10K +-1% .05W TF TC=O+-100	19701	50635
A6A10R25	2100-3611	1	1	ESISTOR-TRMR 50K 10% C SIDE-ADJ 17-TR	32997	3292x-1-503
A6A10R26	0698-7260	7	1	ESISTOR 10K +-1% .05W TF TC=O+-100	19701	50635
A6A10R27	2100-3611	1	1	RESISTOR-TRMR 50K 10% C SIDE-ADJ 17-TR	32997	3292x-1-503

Indicates factory-selected value

HP Part Number 85660-60180

A6A10 Miscellaneous Bias/Relay Driver

Reference Designation	HP Part Number	C D	Qty	Description	Mfr Code	Mfr Part Number
A6A10R28	0698-7260	i	1	RESISTOR 10K +-1% .05W TF TC=O+-100	19701	50635
A6A10R29	2100-3611	l	1	RESISTOR-TRMR 50K 10% C SIDE-ADJ 17-TRN	32997	3292x-1-503
A6A10R30	0698-7260	7	1	RESISTOR 10K +-1% .05W TF TC=O+-100	19701	50635
A6A10R31	2100-1661	7	1	RESISTOR-TRMR 20K 5% WW SIDE-ADJ 22-TRN	32997	3057P-DM3-203
A6A10R32	0757-0416	7	1	RESISTOR 511 +-1% .125W TF TC=O+-100	19701	SFR25H
A6A10R33	0698-3260	9	1	RESISTOR 464K 1% .125W TF TC=O+-100	19701	SFR25H
A6A10R34	2100-1661	7	1	RESISTOR-TRMR 20K 5% WW SIDE-ADJ 22-TRN	32997	3057P-DM3-203
A6A10R35	0757-0416	7	1	RESISTOR 511 +-1% .125W TF TC=O+-100	19701	SFR25H
A6A10R36	0698-3260	9	1	RESISTOR 464K 1% .125W TF TC=O+-100	19701	SFR25H
A6A10R37	2100-1661	7	1	RESISTOR-TRMR 20K 5% WW SIDE-ADJ 22-TRN	32997	3057P-DM3-203
A6A10R38	3757-0416	7	1	RESISTOR 511 +-1% .125W TF TC=O+-100	19701	SFR25H
A6A10R39	3698-3260	9	1	RESISTOR 464K 1% .125W TF TC=O+-100	19701	SFR25H
A6A10R40	2100-1661	7	1	RESISTOR-TRMR 20K 5% WW SIDE-ADJ 22-TRN	32997	3057P-DM3-203
A6A10R41	2100-1661	7	1	RESISTOR-TRMR 20K 5% WW SIDE-ADJ 22-TRN	32997	3057P-DM3-203
A6A10R42	2100-1661	7	1	RESISTOR-TRMR 20K 5% WW SIDE-ADJ 22-TRN	32997	3057P-DM3-203
A6A10R43	0698-7277	6	1	RESISTOR 51.1K +-1% .05W TF TC=O+-100	19701	5023R
A6A10R44	3757-0316	6	1	RESISTOR 42.2 +-1% .125W TF TC=O+-100	19701	SFR25H
A6A10R45	0698-7243	6	1	RESISTOR 1.96K +-1% .05W TF TC=O+-100	19701	50635
A6A10R46	0698-7277	6	1	RESISTOR 51.1K +-1% .05W TF TC=O+-100	19701	5023R
A6A10R47	0698-7258	3	1	RESISTOR 8.251: +-1% .05W TF TC=O+-100	19701	50635
A6A10R48	0698-7243	6	1	RESISTOR 1.96K +-1% .05W TF TC=O+-100	19701	50635
A6A1 OR49	0698-7242	F	1	RESISTOR 1.78K +-1% .05W TF TC=O+-100	19701	50635
A6A10R50	0698-7260	7	1	RESISTOR 10K +-1% .05W TF TC=O+-100	19701	50635
A6A10R51	0698-7260	7	1	RESISTOR 10K +-1% .05W TF TC=O+-100	19701	50635
A6A10R52	0757-1078	9	1	RESISTOR 1.47K +-1% .5W TF TC=O+-100	19701	5053R
A6A1 OR53	0698-7212	9	1	RESISTOR 100 1% .05W F TC=O+-100	24546	C3-1/8-TO-100R-F
A6A10R54	0757-0442	9	1	RESISTOR 10K +-1% .125W TF TC=O+-100	19701	SFR25H
A6A10R56	3698-7246	9	1	RESISTOR 2.61K +-1% .05W TF TC=O+-100	19701	50635
A6A10R57	3698-7238	9	1	RESISTOR 1.21K +-1% .05W TF TC=O+-100	19701	50635
A6A10R58	0698-7260	7	1	RESISTOR 10K +-1% .05W TF TC=O+-100	19701	50635
A6A10R59	3698-3454	3	1	RESISTOR 215K 1% .125W TF TC=O+-100	19701	SFR25H
A6A10R60	1757-0416	7	1	RESISTOR 511 +-1% .125W TF TC=O+-100	19701	SFR25H
A6A10R61	1698-7243	6	1	RESISTOR 1.96K +-1% .05W TF TC=O+-100	19701	50635
A6A10R62	1757-0346	2	1	RESISTOR 10 +-1% .125W TF TC=O+-100	91637	CMF-55-1, T-l
A6A10R63	1698-7212	9	1	RESISTOR 100 1% .05W F TC=O+-100	24546	C3-1/8-TO-100R-F
A6A10R64	0698-7243	6	1	RESISTOR 1.96K +-1% .05W TF TC=O+-100	19701	50635
A6A10R65	0757-0346	2	1	RESISTOR 10 +-1% .125W TF TC=O+-100	91637	CMF-55-1, T-l
A6A10R66	0757-0346	2	1	RESISTOR 10 +-1% .125W TF TC=O+-100	91637	CMF-55-1, T-l
A6A10R67	0757-0398	4	1	RESISTOR 75 +-1% .125W TF TC=O+-100	19701	SFR25H
A6A10R68	0757-0346	2	1	RESISTOR 10 +-1% .125W TF TC=O+-100	91637	CMF-55-1, T-l
A6A10R69	0698-7212	3	1	RESISTOR 100 +-1% .05W TF TC=O+-100	19701	50635
A6A10R70	2100-1661	7	1	RESISTOR-TRMR 20K 5% WW SIDE-ADJ 22-TRN	32997	3057P-DM3-203
A6A10R71	0698-3260	3	1	RESISTOR 464K 1% .125W TF TC=O+-100	19701	SFR25H
A6A10R72	0757-0416	7	1	RESISTOR 511 +-1% .125W TF TC=O+-100	19701	SFR25H
A6A10R73	0698-7260	7	1	RESISTOR 10K +-1% .05W TF TC=O+-100	19701	50635
A6A10R74	0698-7238	9	1	RESISTOR 1.21K +-1% .05W TF TC=O+-100	19701	50635
A6A10R75	0698-7260	7	1	RESISTOR 10K +-1% .05W TF TC=O+-100	19701	50635

**Indicates factory-selected value*

HP Part Number 85660-60180

A6A10 Miscellaneous Bias/Relay Driver

Reference Designation	HP Part Number	C D	Qty	Description	Mfr Code	Mfr Part Number
A6A10R76	2100-1661	7	1	RESISTOR-TRMR 20K 5% WW SIDE-ADJ 22-TRN	32997	3057P-DM3-203
A6A10R77	0698-7277	6	1	RESISTOR 51.1K +-1% .05W TF TC=O+-100	19701	5023R
A6A10R78	0698-7260	7	1	RESISTOR 10K +-1% .05W TF TC=O+-100	19701	50635
A6A10R79	0698-7260	7	1	RESISTOR 10K +-1% .05W TF TC=O+-100	19701	50635
A6A10R80	0698-7277	6	1	RESISTOR 51.1K +-1% .05W TF TC=O+-100	19701	5023R
A6A10R81	2100-3611	1	1	RESISTOR-TRMR 50K 10% C SIDE-ADJ 17-TRN	32997	3292x-1-503
A6A10R82	3698-3153	9	1	RESISTOR 3.831: 1% .125W TF TC=O+-100	19701	SFR25H
A6A10R83	0698-7260	7	1	RESISTOR 10K +-1% .05W TF TC=O+-100	19701	50635
A6A10R84	0698-7260	7	1	RESISTOR 10K +-1% .05W TF TC=O+-100	19701	50635
A6A10TP1	1251-0600	0	1	CONNECTOR-SGL CONT PIN 1.14-MM-BSC-SZ SQ	27264	16-06-0034
A6A10TP2	1251-0600	0	1	CONNECTOR-SGL CONT PIN 1.14-MM-BSC-SZ SQ	27264	16-06-0034
A6A10TP3	1251-0600	0	1	CONNECTOR-SGL CONT PIN 1.14-MM-BSC-SZ SQ	27264	16-06-0034
A6A10TP4	1251-0600	0	1	CONNECTOR-SGL CONT PIN 1.14-MM-BSC-SZ SQ	27264	16-06-0034
A6A10TP5	1251-0600	0	1	CONNECTOR-SGL CONT PIN 1.14-MM-BSC-SZ SQ	27264	16-06-0034
A6A10TP6	1251-0600	0	1	CONNECTOR-SGL CONT PIN 1.14-MM-BSC-SZ SQ	27264	16-06-0034
A6A10TP7	1251-0600	0	1	CONNECTOR-SGL CONT PIN 1.14-MM-BSC-SZ SQ	27264	16-06-0034
A6A10TP8	1251-0600	0	1	CONNECTOR-SGL CONT PIN 1.14-MM-BSC-SZ SQ	27264	16-06-0034
A6A10U1	1820-1538	2	1	IC GATE CMOS NAND QUAD 2-INP	3L585	CD401 1AF
A6A10U2	1826-1058	3	1	IC OP AMP GP 8-TO-99 PKG	06665	OP-02CJ
A6A10U3	1820-1542	8	1	IC BFR CMOS INV HEX l-INP	04713	MC14049UBCL
A6A10U4	1858-0047	5	1	TRANSISTOR ARRAY 16-PIN PLSTC DIP	56289	ULN-2003A
A6A10U5	1858-0047	5	1	TRANSISTOR ARRAY 16-PIN PLSTC DIP	56289	ULN-2003A
A6A10U6	1810-0206	8	1	NETWORK-RES 8-SIP 10.0K OHM X 7	11236	750-81
A6A10U7	1826-0161	7	1	IC OP AMP GP QUAD 14-DIP-P PKG	27014	LM324N
A6A10VR1	1902-3323	1	1	DIODE-ZNR 42.2V 5% DO-35 PD=.4W TC=+.08%	04713	
A6A10VR2	1902-3301	5	1	DIODE-ZNR 34.8V 5% DO-35 PD=.4W	04713	
A6A10VR3	1902-3301	5	1	DIODE-ZNR 34.8V 5% DO-35 PD=.4W	04713	
A6A10VR4	1902-3301	5	1	DIODE-ZNR 34.8V 5% DO-35 PD=.4W	04713	
A6A10VR5	1902-3301	5	1	DIODE-ZNR 34.8V 5% DO-35 PD=.4W	04713	
A6A10VR6	1902-3203	6	1	DIODE-ZNR 14.7V 5% DO-35 PD=.4W	04713	
A6A10VR7	1902-3345	7	1	DIODE-ZNR 51.1V 5% DO-35 PD=.4W	04713	
A6A10VR8	1902-0025	4	1	DIODE-ZNR 10V 5% DO-35 PD=.4W TC=+.06%	04713	
A6A10VR9	1902-3234	3	1	DIODE-ZNR 19.6V 5% DO-35 PD=.4W	04713	

Indicates factory-selected value

HP Part Number 85660-60322

A6A10 Miscellaneous Bias/Relay Driver

Reference Designation	HP Part Number	C-D	Qty	Description	Mfr Code	Mfr Part Number
A6A10	85660-60322	7	1	BOARD ASSEMBLY, MISCELLANEOUS BIAS/RELAY DRIVER (SERIAL PREFIX: 2747A)	28480	85660-60322
A6A10C1	0160-2055	C	1	CAPACITOR-FXD .01UF +80-20% 100VDC CER		805-504 Y5V 1032
A6A10C2	0180-2206	4	1	CAPACITOR-FXD 60UF+-10% 6VDC TA	56289	150D606X9006B2-DYS
A6A10C3	0180-2208	E	1	CAPACITOR-FXD 220UF+-10% 10VDC TA	56289	150D227X9010S2-DYS
A6A10C4	0180-0116	1	1	CAPACITOR-FXD 6.8UF+-10% 35VDC TA	56289	150D685X9035B2-DYS
A6A10C5	0160-2055	C	1	CAPACITOR-FXD .01UF +80-20% 100VDC CER		805-504 Y5V 1032
A6A10C6	0160-4441	1	1	CAPACITOR-FXD .47UF +-10% 50VDC CER	04222	SR305C474KAAH
A6A10C8	0180-0097	7	1	CAPACITOR-FXD 47UF+-10% 35VDC TA	56289	150D476X9035S2-DYS
A6A10C9	0160-4441	1	1	CAPACITOR-FXD .47UF +-10% 50VDC CER	04222	SR305C474KAAH
A6A10C10	0180-0228	E	1	CAPACITOR-FXD 22UF+-10% 15VDC TA	56289	150D226X9015B2-DYS
A6A10C11	0180-0116	1	1	CAPACITOR-FXD 6.8UF+-10% 35VDC TA	56289	150D685X9035B2-DYS
A6A10C13	0180-0228	E	1	CAPACITOR-FXD 22UF+-10% 15VDC TA	56289	150D226X9015B2-DYS
A6A10C15	0180-0228	E	1	CAPACITOR-FXD 22UF+-10% 15VDC TA	56289	150D226X9015B2-DYS
A6A10C16	0160-4574	1	1	CAPACITOR-FXD 1000PF +-10% 100VDC CER	04222	SA101C102KAAH
A6A10CR1	1901-1067	4	1	DIODE-SWITCHING 125V 175MA 60NS DO-35	27014	FDH444
A6A10CR2	1901-1067	4	1	DIODE-SWITCHING 125V 175MA 60NS DO-35	27014	FOH444
A6A10CR3	1901-1067	4	1	DIODE-SWITCHING 125V 175MA 60NS DO-35	27014	FDH444
A6A10CR4	1901-1067	4	1	DIODE-SWITCHING 125V 175MA 60NS DO-35	27014	FDH444
A6A10CR5	1901-1067	4	1	DIODE-SWITCHING 125V 175MA 60NS DO-35	27014	FDH444
A6A10CR6	1901-1067	4	1	DIODE-SWITCHING 125V 175MA 60NS DO-35	27014	FDH444
A6A10CR7	1901-1067	4	1	DIODE-SWITCHING 125V 175MA 60NS DO-35	27014	FDH444
A6A10CR10	1901-1067	4	1	DIODE-SWITCHING 125V 175MA 60NS DO-35	27014	FDH444
A6A10CR13	1901-0535	9	1	DIODE-SCHOTTKY SM SIG		
A6A10CR14	1901-0535	9	1	DIODE-SCHOTTKY SM SIG		
A6A10CR15	1901-1067	4	1	DIODE-SWITCHING 125V 175MA 60NS DO-35	27014	FDH444
A6A10CR18	1901-1067	4	1	DIODE-SWITCHING 125V 175MA 60NS DO-35	27014	FDH444
A6A10CR19	1901-1067	4	1	DIODE-SWITCHING 125V 175MA 60NS DO-35	27014	FDH444
A6A10CR20	1901-1067	4	1	DIODE-SWITCHING 125V 175MA 60NS DO-35	27014	FOH444
A6A10CR21	1901-1067	4	1	DIODE-SWITCHING 125V 175MA 60NS DO-35	27014	FDH444
A6A10CR22	1901-1067	4	1	DIODE-SWITCHING 125V 175MA 60NS DO-35	27014	FDH444
A6A10CR23	1901-1067	4	1	DIODE-SWITCHING 125V 175MA 60NS DO-35	27014	FDH444
A6A10CR24	1901-1067	4	1	DIODE-SWITCHING 125V 175MA 60NS DO-35	27014	FDH444
A6A10CR25	1901-1067	4	1	DIODE-SWITCHING 125V 175MA 60NS DO-35	27014	FDH444
A6A10CR26	1901-1067	4	1	DIODE-SWITCHING 125V 175MA 60NS DO-35	27014	FDH444
A6A10CR27	1901-1067	4	1	DIODE-SWITCHING 125V 175MA 60NS DO-35	27014	FDH444
A6A10CR28	1901-1067	4	1	DIODE-SWITCHING 125V 175MA 60NS DO-35	27014	FDH444
A6A10MP1				NOT ASSIGNED		
A6A10MP2	1480-0073	6	2	PIN-ROLL .062-IN-DIA .25-IN-LG BE-CU	72962	99-012-062-0250
A6A10MP3	1040-0748	3	1	EXTR-PC BD BLK POLYC .062-IN-BD-THKNS		
A6A10MP4	1040-0749	4	1	EXTR-PC BD BRN POLYC .062-IN-BD-THKNS		
A6A10Q1	1854-0477	7	1	TRANSISTOR NPN 2N2222A SI TO-18 PD=500MW	04713	2N2222A
A6A10Q2	1853-0281	9	1	TRANSISTOR PNP 2N2907A SI TO-18 PD=400MW	04713	2N2907A
A6A10Q3	1854-0477	7	1	TRANSISTOR NPN 2N2222A SI TO-18 PD=500MW	04713	2N2222A
A6A10Q4	1853-0281	9	1	TRANSISTOR PNP 2N2907A SI TO-18 PD=400MW	04713	2N2907A
A6A10Q5	1854-0477	7	1	TRANSISTOR NPN 2N2222A SI TO-18 PD=500MW	04713	2N2222A
A6A10Q6	1855-0420	2	1	TRANSISTOR J-FET 2N4391 N-CHAN D-MODE	17856	2N4391

**Indicates factory-selected value*

HP Part Number 85660-60322

A6A10 Miscellaneous Bias/Relay Driver

Reference Designation	HP Part Number	C-D	Qty	Description	Mfr Code	Mfr Part Number
A6A10Q7	1855-0420	2	1	TRANSISTOR J-FET 214391 N-CHAN O-MODE	17856	2N4391
A6A10Q8	1855-0420	2	1	TRANSISTOR J-FET 2N4391 N-CHAN O-MODE	17856	2N4391
A6A10Q9	1854-0477	7	1	TRANSISTOR NPN 2N2222A SI TO-18 PD=500MW	04713	2N2222A
A6A10Q10	1855-0420	2	1	TRANSISTOR J-FET 2N4391 N-CHAN O-MODE	17856	2N4391
A6A10Q11	1853-0213	4	1	TRANSISTOR PNP 2N4236 SI TO-5 PD=1W	04713	2N4236
A6A10Q12	1854-0477	7	1	TRANSISTOR NPN 2N2222A SI TO-18 PD=500MW	04713	2N2222A
A6A10Q13	1853-0281	9	1	TRANSISTOR PNP 2N2907A SI TO-18 PD=400MW	04713	2N2907A
A6A10Q14	1854-0477	7	1	TRANSISTOR NPN 2N2222A SI TO-18 PD=500MW	04713	2N2222A
A6A10Q15	1854-0477	7	1	TRANSISTOR NPN 2N2222A SI TO-18 PD=500MW	04713	2N2222A
A6A10Q16	1854-0477	7	1	TRANSISTOR NPN 2N2222A SI TO-18 PD=500MW	04713	2N2222A
A6A10Q17	1854-0477	7	1	TRANSISTOR NPN 2N2222A SI TO-18 PD=500MW	04713	2N2222A
A6A10Q18	1854-0477	7	1	TRANSISTOR NPN 2N2222A SI TO-18 PD=500MW	04713	2N2222A
A6A10Q19	1854-0477	7	1	TRANSISTOR NPN 2N2222A SI TO-18 PD=500MW	04713	2N2222A
A6A10Q20	1854-0477	7	1	TRANSISTOR NPN 2N2222A SI TO-18 PD=500MW	04713	2N2222A
A6A10Q21	1854-0472	2	1	TRANSISTOR NPN SI OARL PD=500MW	04713	MPS-A14
A6A10R1	2100-2574	3	1	RESISTOR-TRMR 500 10% TKF SIDE-AOJ l-TRN	73138	82PAR500
A6A10R2	0698-7260	7	1	RESISTOR 10K +-1% .05W TF TC=O+-100	19701	50635
A6A10R3	0698-7260	7	1	RESISTOR 10K +-1% .05W TF TC=O+-100	19701	50635
A6A10R4	0698-7277	6	1	RESISTOR 51.1K +-1% .05W TF TC=O+-100	19701	5023R
A6A10R5	0698-7260	7	1	RESISTOR 10K +-1% .05W TF TC=O+-100	19701	50635
A6A10R6	0757-0346	2	1	RESISTOR 10 +-1% .125W TF TC=O+-100	91637	CMF-55-l. T-l
A6A10R7	0698-7243	6	1	RESISTOR 1.96K +-1% .05W TF TC=O+-100	19701	50635
A6A10R8	3698-7266	3	1	RESISTOR 17.8K +-1% .05W TF TC=O+-100	19701	50635
A6A10R9	2100-0545	4	1	IESISTOR-TRMR 1K 10% TKF SIDE-AOJ 17-TRN	73138	67XR
A6A10R10	3698-7281	2	1	RESISTOR 75K +-2% .05W TF TC=O+-100	19701	5023R
A6A10R11	3699-0127	3	1	7ESISTOR 464K +-1% .05W TF TC=O+-100	11502	RG-1/8-T050
A6A10R12	2100-0545	4	1	RESISTOR-TRMR 1K 10% TKF SIDE-AOJ 17-TRN	73138	67XR
A6A10R13	3698-7281	2	1	RESISTOR 75K +-2% .05W TF TC=O+-100	19701	5023R
A6A10R14	1699-0127	3	1	RESISTOR 464K +-1% .05W TF TC=O+-100	11502	RG-l/8-TO50
A6A10R15	2100-0545	4	1	RESISTOR-TRMR 1K 10% TKF SIDE-AOJ 17-TRN	73138	67XR
A6A10R16	3698-7281	2	1	RESISTOR 75K +-2% .05W TF TC=O+-100	19701	5023R
A6A10R17	1699-0127	3	1	RESISTOR 464K +-1% .05W TF TC=O+-100	11502	RG-1/8-T050
A6A10R18	2100-0545	4	1	RESISTOR-TRMR 1K 10% TKF SIDE-AOJ 17-TRN	73138	67XR
A6A10R19	1698-7281	2	1	RESISTOR 75K +-2% .05W TF TC=O+-100	19701	5023R
A6A10R20	1699-0127	3	1	RESISTOR 464K +-1% .05W TF TC=O+-100	11502	RG-l/8-TO50
A6A10R21	2100-0670	6	1	RESISTOR-TRMR 10K 10% TKF SIDE-AOJ 17-TR	73138	67XR
A6A10R22	0698-7260	7	1	RESISTOR 10K +-1% .05W TF TC=O+-100	19701	50635
A6A10R23	2100-0670	6	1	IESISTOR-TRMR 10K 10% TKF SIDE-AOJ 17-TR	73138	67XR
A6A10R24	0698-7260	7	1	RESISTOR 10K +-1% .05W TF TC=O+-100	19701	50635
A6A10R25	!100-0670	6	1	IESISTOR-TRMR 10K 10% TKF SIDE-AOJ 17-TR	73138	67XR
A6A10R26	0698-7260	7	1	RESISTOR 10K +-1% .05W TF TC=O+-100	19701	50635
A6A10R27	!100-0670	6	1	IESISTOR-TRMR 10K 10% TKF SIDE-AOJ 17-TR	73138	67XR
A6A10R28	0698-7260	7	1	RESISTOR 10K +-1% .05W TF TC=O+-100	19701	50635
A6A10R29	!100-0670	6	1	IESISTOR-TRMR 10K 10% TKF SIDE-AOJ 17-TR	73138	67XR
A6A10R30	0698-7260	7	1	RESISTOR 10K +-1% .05W TF TC=O+-100	19701	50635
A6A10R31	!100-1661	7	1	RESISTOR-TRMR 20K 5% WW SIOE-AOJ 22-TRN	32997	3057P-DM3-203
A6A10R32	0757-0416	7	1	RESISTOR 511 +-1% .125W TF TC=O+-100	19701	SFR25H
A6A10R33	0698-3260	9	1	RESISTOR 464K 1% .125W TF TC=O+-100	19701	SFR25H

**Indicates factory-selected value*

HP Part Number 85660-60322

A6A10 Miscellaneous Bias/Relay Driver

Reference Designation	HP Part Number	C D	Qty	Description	Mfr Code	Mfr Part Number
A6A10R34	2100-1661	7	1	RESISTOR-TRMR 20K 5% WW SIDE-AOJ 22-TRN	32997	3057P-DM3-203
A6A10R35	0757-0416	7	1	RESISTOR 511 +-1% .125W TF TC=O+-100	19701	SFR25H
A6A10R36	0698-3260	9	1	RESISTOR 464K 1% .125W TF TC=O+-100	19701	SFR25H
A6A10R37	2100-1661	7	1	RESISTOR-TRMR 20K 5% WW SIDE-AOJ 22-TRN	32997	3057P-DM3-203
A6A10R38	0757-0416	7	1	RESISTOR 511 +-1% .125W TF TC=O+-100	19701	SFR25H
A6A10R39	0698-3260	9	1	RESISTOR 464K 1% .125W TF TC=O+-100	19701	SFR25H
A6A10R40	1100-1661	7	1	RESISTOR-TRMR 20K 5% WW SIDE-AOJ 22-TRN	32997	3057P-DM3-203
A6A10R41	1100-1661	7	1	RESISTOR-TRMR 20K 5% WW SIDE-AOJ 22-TRN	32997	3057P-DM3-203
A6A10R42	1100-1661	7	1	RESISTOR-TRMR 20K 5% WW SIDE-AOJ 22-TRN	32997	3057P-DM3-203
A6A10R43	0698-7277	6	1	RESISTOR 51.1K +-1% .05W TF TC=O+-100	19701	5023R
A6A10R44	0757-0316	6	1	RESISTOR 42.2 +-1% .125W TF TC=O+-100	19701	SFR25H
A6A10R45	0698-7243	6	1	RESISTOR 1.96K +-1% .05W TF TC=O+-100	19701	50635
A6A10R46	0698-7277	6	1	RESISTOR 51.1K +-1% .05W TF TC=O+-100	19701	502317
A6A10R47	1698-7258	3	1	RESISTOR 8.25K +-1% .05W TF TC=O+-100	19701	50635
A6A10R48	1698-7243	6	1	RESISTOR 1.96K +-1% .05W TF TC=O+-100	19701	50635
A6A10R49	1698-7242	5	1	RESISTOR 1.78K +-1% .05W TF TC=O+-100	19701	50635
A6A10R50	0698-7260	7	1	RESISTOR 10K +-1% .05W TF TC=O+-100	19701	50635
A6A10R51	0698-7260	7	1	RESISTOR 10K +-1% .05W TF TC=O+-100	19701	50635
A6A10R52	0757-1078	9	1	RESISTOR 1.47K +-1% .5W TF TC=O+-100	19701	5053R
A6A10R54	1757-0442	9	1	RESISTOR 10K +-1% .125W TF TC=O+-100	19701	SFR25H
A6A10R56	0698-7246	9	1	RESISTOR 2.61K +-1% .05W TF TC=O+-100	19701	50635
A6A10R57	0698-7238	9	1	RESISTOR 1.21K +-1% .05W TF TC=O+-100	19701	50635
A6A10R58	0698-7260	7	1	RESISTOR 10K +-1% .05W TF TC=O+-100	19701	50635
A6A10R59	0698-3454	3	1	RESISTOR 215K 1% .125W TF TC=O+-100	19701	SFR25H
A6A10R60	1757-0416	7	1	RESISTOR 511 +-1% .125W TF TC=O+-100	19701	SFR25H
A6A10R61	1698-7243	6	1	RESISTOR 1.96K +-1% .05W TF TC=O+-100	19701	50635
A6A10R62	1757-0346	2	1	RESISTOR 10 +-1% .125W TF TC=O+-100	91637	CMF-55-1, T-1
A6A10R64	1698-7243	6	1	RESISTOR 1.96K +-1% .05W TF TC=O+-100	19701	50635
A6A10R65	0757-0346	2	1	RESISTOR 10 +-1% .125W TF TC=O+-100	91637	CMF-55-1, T-1
A6A10R66	1757-0346	2	1	RESISTOR 10 +-1% .125W TF TC=O+-100	91637	CMF-55-1. T-1
A6A10R67	0757-0398	4	1	RESISTOR 75 +-1% .125W TF TC=O+-100	19701	SFR25H
A6A10R68	0757-0346	2	1	RESISTOR 10 +-1% .125W TF TC=O+-100	91637	CMF-55-1, T-1
A6A10R69	1698-7212	9	1	RESISTOR 100 +-1% .05W TF TC=O+-100	19701	50635
A6A10R70	100-1661	7	1	RESISTOR-TRMR 20K 5% WW SIDE-AOJ 22-TRN	32997	3057P-DM3-203
A6A10R71	0698-3260	9	1	RESISTOR 464K 1% .125W TF TC=O+-100	19701	SFR25H
A6A10R72	0757-0416	7	1	RESISTOR 511 +-1% .125W TF TC=O+-100	19701	SFR25H
A6A10R73	0698-7260	7	1	RESISTOR 10K +-1% .05W TF TC=O+-100	19701	50635
A6A10R74	0698-7238	9	1	RESISTOR 1.21K +-1% .05W TF TC=O+-100	19701	50635
A6A10R75	0698-7260	7	1	RESISTOR 10K +-1% .05W TF TC=O+-100	19701	50635
A6A10R76	100-1661	7	1	RESISTOR-TRMR 20K 5% WW SIDE-AOJ 22-TRN	32997	3057P-DM3-203
A6A10R77	698-7277	6	1	RESISTOR 51.1K +-1% .05W TF TC=O+-100	19701	5023R
A6A10R78	698-7260	7	1	RESISTOR 10K +-1% .05W TF TC=O+-100	19701	50635
A6A10R79	698-7260	7	1	RESISTOR 10K +-1% .05W TF TC=O+-100	19701	50635
A6A10R80	698-7277	6	1	RESISTOR 51.1K +-1% .05W TF TC=O+-100	19701	5023R
A6A10R81	100-0670	6	1	IESISTOR-TRMR 10K 10% TKF SIDE-AOJ 17-TR	73138	67XR
A6A10R82	698-3153	9	1	RESISTOR 3.83K 1% .125W TF TC=O+-100	19701	SFR25H
A6A10R83	698-7260	7	1	RESISTOR 10K +-1% .05W TF TC=O+-100	19701	50635

**Indicates factory-selected value*

HP Part Number 85660-60322

A6A10 Miscellaneous Bias/Relay Driver

Reference Designation	HP Part Number	CD	Qty	Description	Mfr Code	Mfr Part Number
A6A10R84	0698-7260	7	1	RESISTOR 10K +-1% .05W TF TC=O+-100	19701	50635
A6A10R85	0698-7260	7	1	RESISTOR 10K +-1% .05W TF TC=O+-100	19701	50635
A6A10R86*	0698-7265	2	1	RESISTOR 16.2K +-1% .05W TF TC=O+-100	19701	50635
A6A10R87*	0698-7266	3	1	RESISTOR 17.8K +-1% .05W TF TC=O+-100	19701	50635
A6A10R88*	0698-7258	3	1	RESISTOR 8.25K +-1% .05W TF TC=O+-100	19701	50635
A6A10R89*	0698-7246	9	1	RESISTOR 2.61K +-1% .05W TF TC=O+-100	19701	50635
A6A10R90*	3698-7188	a	1	RESISTOR 10 +-1% .05W TF TC=O+-100	19701	50635
A6A10R91*	3698-7266	3	1	RESISTOR 17.8K +-1% .05W TF TC=O+-100	19701	50635
A6A10R92	3698-7236	7	1	RESISTOR 1K +-1% .05W TF TC=O+-100	19701	50635
A6A10TP1	1251-0600	0	1	CONNECTOR-SGL CONT PIN 1.14-MM-BSC-SZ SQ	27264	16-06-0034
A6A10TP2	1251-0600	0	1	CONNECTOR-SGL CONT PIN 1.14-MM-BSC-SZ SQ	27264	16-06-0034
A6A10TP3	1251-0600	0	1	CONNECTOR-SGL CONT PIN 1.14-MM-BSC-SZ SQ	27264	16-06-0034
A6A10TP4	1251-0600	0	1	CONNECTOR-SGL CONT PIN 1.14-MM-BSC-SZ SQ	27264	16-06-0034
A6A10TP5	1251-0600	0	1	CONNECTOR-SGL CONT PIN 1.14-MM-BSC-SZ SQ	27264	16-06-0034
A6A10TP6	1251-0600	0	1	CONNECTOR-SGL CONT PIN 1.14-MM-BSC-SZ SQ	27264	16-06-0034
A6A10TP7	1251-0600	0	1	CONNECTOR-SGL CONT PIN 1.14-MM-BSC-SZ SQ	27264	16-06-0034
A6A10TP8	1251-0600	0	1	CONNECTOR-SGL CONT PIN 1.14-MM-BSC-SZ SQ	27264	16-06-0034
A6A10U1	1820-2922	0	1	IC GATE CMOS/74HC NAND QUAD 2-INP	04713	MC74HC00N
A6A10U2	1826-1058	3	1	IC OP AMP GP 8-TO-99 PKG	06665	OP-OECJ
A6A10U3	1820-1542	8	1	IC BFR CMOS INV HEX 1-INP	04713	MC14049UBCL
A6A10U4	1858-0047	5	1	TRANSISTOR ARRAY 16-PIN PLSTC DIP	56289	ULN-2003A
A6A10U5	1858-0047	5	1	TRANSISTOR ARRAY 16-PIN PLSTC DIP	56289	ULN-2003A
A6A10U6	1810-0206	a	1	NETWORK-RES 8-SIP 10.0K OHM X 7	11236	750-81
A6A10U7	1826-0161	7	1	IC OP AMP GP QUAD 14-DIP-P PKG	27014	LM324N
A6A10VR1	1902-3323	1	1	DIODE-ZNR 42.2V 5% DO-35 PD=.4W TC=+.08%	04713	
A6A10VR2	1902-3301	5	1	DIODE-ZNR 34.8V 5% DO-35 PD=.4W	04713	
A6A10VR3	1902-3301	5	1	DIODE-ZNR 34.8V 5% DO-35 PD=.4W	04713	
A6A10VR4	1902-3301	5	1	DIODE-ZNR 34.8V 5% DO-35 PD=.4W	04713	
A6A10VR5	1902-3301	5	1	DIODE-ZNR 34.8V 5% DO-35 PD=.4W	04713	
A6A10VR6	1902-3203	6	1	DIODE-ZNR 14.7V 5% DO-35 PD=.4W	04713	
A6A10VR7	1902-3345	7	1	DIODE-ZNR 51.1V 5% DO-35 PD=.4W	04713	
A6A10VR8	1902-0025	4	1	DIODE-ZNR 10V 5% DO-35 PD=.4W TC=+.06%	04713	
A6A10VR9	1902-3234	3	1	DIODE-ZNR 19.6V 5% DO-35 PD=.4W	04713	

**Indicates factoy-selected value*

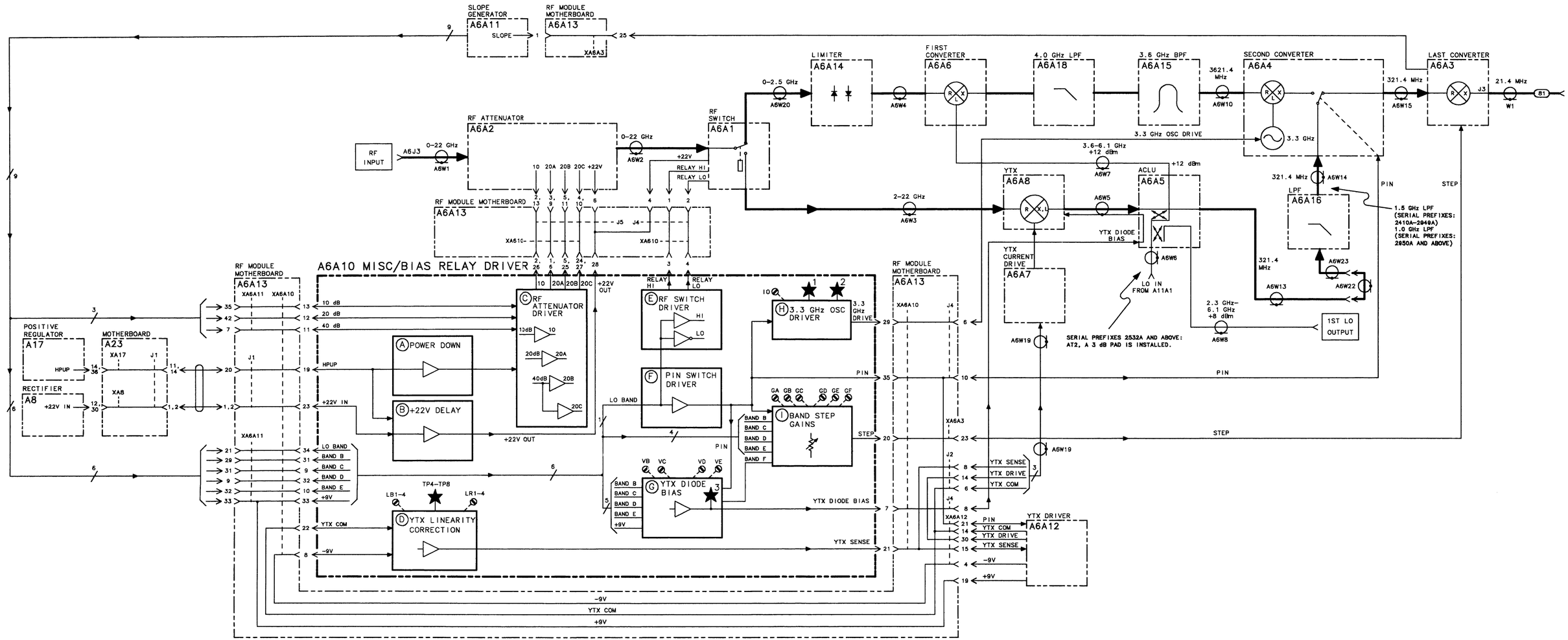

A6A10 MISCELLANEIOUS BIAS/RELAY DRIVER, BLOCK DIAGRAM

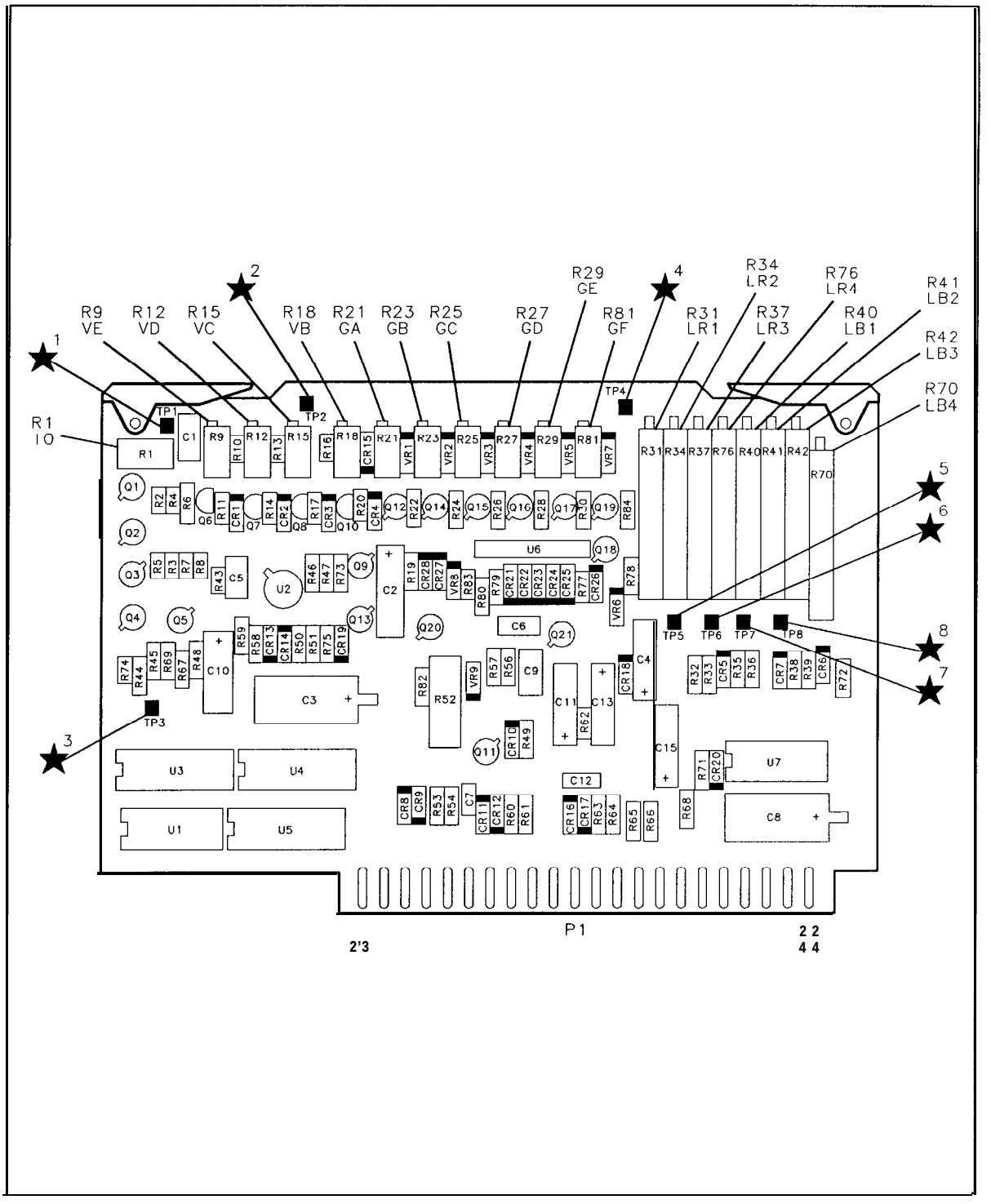

A6A10 Miscellaneous Bias/Relay Driver Component Locations, 85660-60180

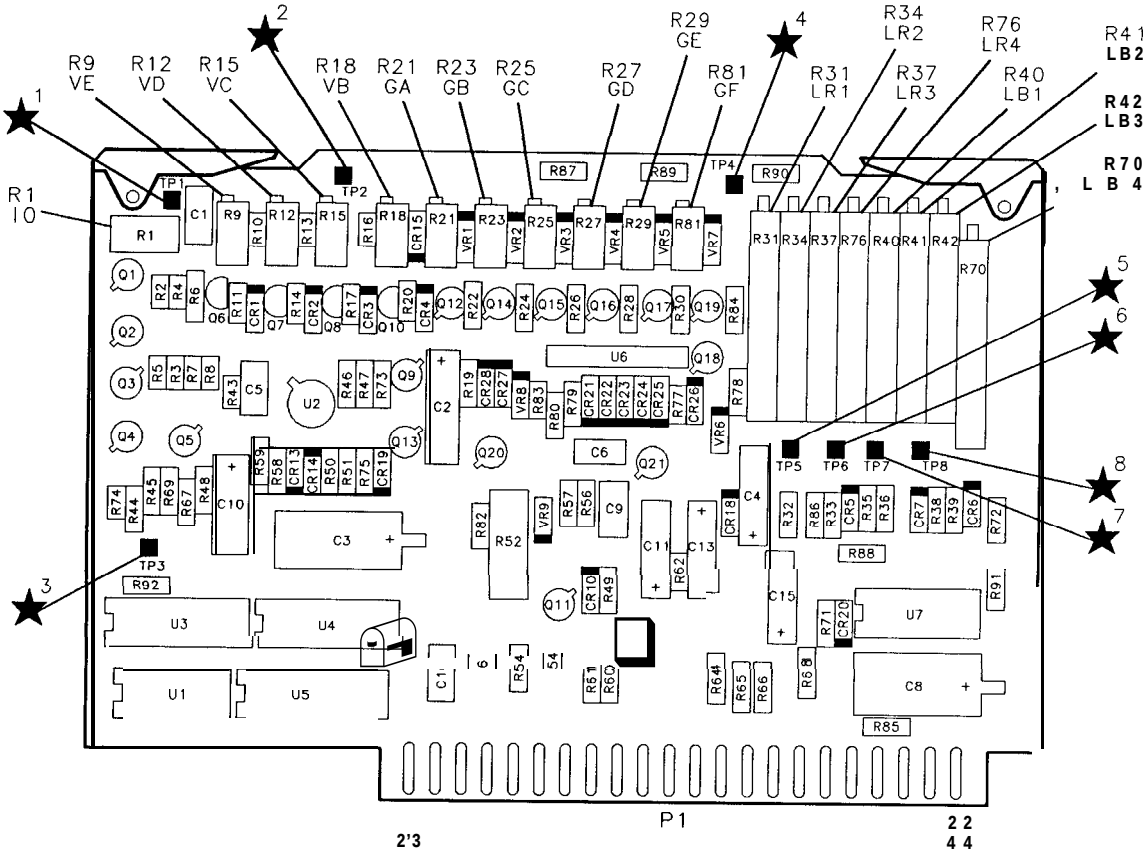

A6A10 Miscellaneous Bias/Relay Driver Component Locations, **85660-60322**

A6A10 MISCELLANEOUS BIAS/RELAY DRIVER
85660-60180
(SERIAL PREFIXES:
2410A-2729A)

P1

PIN	SIGNAL	TO/FROM	FUNCTION BLOCK
1 23	20A-2 +22V	A6A2 A8P1-12,30	C B
2 24	10-1 20D-2	A6A2 A6A2	C C
3 25	RELAY HI 20B-1	A6A1-1 A6A2	E C
4 26	RELAY LO 10-2	A6A1-2 A6A2	E C
5 27	20B-2 20C-1	A6A2 A6A2	C C
6 28	20A-1 +22V OUT	A6A2 A6A2 A6A14C	C B
7 29	YTX BIAS 3.3 GHZ DRIVE	A6A5 BIAS A6A4 1E	G H
8 30	-9V NC	A6A12P1-4	D
9 31	BAND C BAND B	A6A11P1-31 A6A11P1-29	G G
10 32	BAND E BAND D	A6A11P1-32 A6A11P1-9	G G
11 33	40 DB +9V	A6A11P1-7 A6A12P1-19	C G
12 34	20 DB LO BAND	A6A11P1-42 A6A11P1-21	C F
13 35	10 DB PIN	A6A11P1-35 A6A4 2M A6A5A1P1-21 A6A12P1-21	C F
14 36	+20V +20V		J J
15 37	-10V -10V		J J
16 38	GND GND		J J
17 39	-40V -40V		J J
18 40	+5.2V +5.2V		J J
19 41	HPUP NC	A6A13J1-20	A
20 42	STEP NC	A6A3A1P1-23	I
21 43	YTX SENSE NC	A6A7J2-8	D
22 44	YTX COM NC	A6A12P1-14	D

Ⓐ POWER DOWN

Ⓑ +22V DELAY

Ⓒ RF ATTENUATOR DRIVER

SEE NOTE 4

Ⓓ YTX LINEARITY CORRECTION

Ⓔ RF SWITCH DRIVER

Ⓕ PIN SWITCH DRIVER

Ⓖ YTX DIODE BIAS

Ⓗ 3.3 GHZ OSCILLATOR DRIVE

Ⓘ BAND STEP GAINS

Ⓙ POWER SUPPLIES

NOTES:

1. REFERENCE DESIGNATORS WITHIN THIS ASSEMBLY ARE ABBREVIATED. FOR COMPLETE REFERENCE DESIGNATION,PREFIX ABBREVIATION WITH ASSEMBLY DESIGNATION.
2. UNLESS OTHERWISE INDICATED: RESISTANCE IS IN OHMS (Ω), CAPACITANCE IS IN MICROFARADS(μF) INDUCTANCE IS IN MICROHENRIES(μH)
3. UNLESS OTHERWISE INDICATED: SIGNALS ENTER AT LEFT SIDE AND EXIT AT RIGHT SIDE OF FUNCTION BLOCKS.
4. NEGATIVE TRUE LOGIC ON OUTPUTS.

PIN NUMBER	ATTENUATION 0dB	10dB	20dB	30dB	40dB	50dB	60dB	70dB
P1-2	1	0	1	0	1	0	1	0
P1-26	0	1	0	1	0	1	0	1
P1-6	1	1	0	0	0	0	0	0
P1-1	0	0	1	1	1	1	1	1
P1-5	0	0	0	0	0	0	1	1
P1-25	1	1	1	1	1	1	0	0
P1-27	1	1	1	1	0	0	0	0
P1-24	0	0	0	0	1	1	1	1

5. U6 PIN CONFIGURATION:

U6 (10K)



6. U5B IS NOT USED. PIN 2 IS CONNECTED TO GROUND. PIN 15 IS NOT CONNECTED.

7. MNEMONICS TABLE:

MNEMONIC	DESCRIPTION
HPUP	HIGH=POWER UP

A6A10

A6A10 MISCELLANEOUS BIAS/RELAY DRIVER
85660-60322
(SERIAL PREFIX: 2747A)

P1

PIN	SIGNAL	TO/FROM	FUNCTION BLOCK
1	20A-2	A6A2	C
23	+22V	A8P1-12,30	B
2	10-1	A6A2	C
24	20C-2	A6A2	C
3	RELAY HI	A6A1-1	E
25	20B-1	A6A2	C
4	RELAY LO	A6A1-2	E
26	10-2	A6A2	C
5	20B-2	A6A2	C
27	20C-1	A6A2	C
6	20A-1	A6A2	C
28	+22V OUT	A6A2 +4C A6A1 +4C	B
7	YTX BIAS	A6A5 BIAS	G
29	3.3 GHZ DRIVE	A6A4 1E	H
8	-9V	A8A12P1-4	D
30	NC		
9	BAND C	A8A11P1-31	G
31	BAND B	A8A11P1-29	G
10	BAND E	A8A11P1-32	G
32	BAND D	A8A11P1-9	G
11	40 DB	A8A11P1-7	C
33	+9V	A8A12P1-19	G
12	20 DB	A8A11P1-42	C
34	LO BAND	A8A11P1-21	F
13	10 DB	A8A11P1-35	C
35	PIN	A6A4 1W A8A8A1P1-21 A8A13P1-21	F
14	+20V		J
36	+20V		J
15	-10V		J
37	-10V		J
16	GND		J
38	GND		J
17	-40V		J
39	-40V		J
18	+5.2V		J
40	+5.2V		J
19	HPUP	A6A13J1-20	A
41	NC		
20	STEP	A6A3A1P1-23	I
42	NC		
21	YTX SENSE	A8A7J2-8	D
43	NC		
22	YTX COM	A8A12P1-14	D
44	NC		

Ⓐ POWER DOWN

Ⓑ +22V DELAY

Ⓒ RF ATTENUATOR DRIVER

Ⓓ YTX LINEARITY CORRECTION

Ⓔ RF SWITCH DRIVER

Ⓕ PIN SWITCH DRIVER

Ⓖ YTX DIODE BIAS

Ⓗ 3.3 GHZ OSCILLATOR DRIVE

Ⓘ BAND STEP GAINS

Ⓙ POWER SUPPLIES

NOTES:

1. REFERENCE DESIGNATORS WITHIN THIS ASSEMBLY ARE PREFIXED WITH A6. ASSEMBLY AND CABLE TEST WITH NO PREFIX ABBREVIATION WITH ASSEMBLY DESIGNATION.
2. UNLESS OTHERWISE INDICATED: RESISTANCE IS IN OHMS (Ω) CAPACITANCE IS IN MICROFARADS (μF) INDUCTANCE IS IN MICROHENRIES (μH)
3. UNLESS OTHERWISE INDICATED: SIGNALS ENTER AT LEFT SIDE AND EXIT AT RIGHT SIDE OF FUNCTION BLOCKS.
4. NEGATIVE TRUE LOGIC ON OUTPUTS.

PIN NUMBER	ATTENUATION 0dB	10dB	20dB	30dB	40dB	50dB	60dB	70dB
P1-2	1	0	1	0	1	0	1	0
P1-26	0	1	0	1	0	1	0	1
P1-6	1	1	0	0	0	0	0	0
P1-1	0	0	1	1	1	1	1	1
P1-5	0	0	0	0	0	0	1	1
P1-25	1	1	1	1	1	1	0	0
P1-27	1	1	1	1	0	0	0	0
P1-24	0	0	0	0	1	1	1	1

5. U6 PIN CONFIGURATION:

U6 (10K)

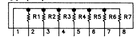

6. U5B IS NOT USED. PIN 2 IS CONNECTED TO GROUND, PIN 15 IS NOT CONNECTED.

7. MNEMONICS TABLE:

MNEMONIC	DESCRIPITON
HPUP	HIGH=POWER UP

8. R86★, R87★, R88★, R89★,R90★, R91★ ARE FACTORY-SELECTED COMPONENTS. ACCEPTABLE VALUES RANGE FROM 10Ω TO 40KΩ .

A6A10

A6A10 MISCELLANEOUS BIAS/RELAY DRIVER, SCHEMATIC DIAGRAM

A6A11

A6A11 Slope Generator, Circuit Description

The slope generator takes a voltage which is proportional to YTX frequency and produces a current to control the slope attenuator in the A6A3 Last Converter, which compensates for conversion loss variations of the input mixer within each frequency band. The slope generator also has circuitry which decodes bandswitch and attenuator settings, produces pulses for the sample and hold, and hysteresis circuits in the A6A12 YTX Driver, produces the YTX peaking signal for the YTX Driver, and a signal to switch in the filter capacitor on the A6A7 YTX Current Driver.

Bandswitch and Attenuator Decode Ⓐ

U9 is a hex latch which receives six lines from the 50-wire Instrument Bus and a strobe, LCK2, which goes low when the six lines have valid A6 RF Module information. Three of the latch outputs have attenuator setting information and go to the A6A10 Miscellaneous Bias/Relay Driver. The other three lines have bandswitch information which is decoded by U3A and U3B.

U3B decodes the low band (Band A, 0 to 2.5 GHz) and the external mixer band (Band F). When pin 2 of U9 is high and pin 12 is low, Band A is selected. The output of U3B is high, turning Q22 on, bringing the collector of Q22 low. This turns Q19 off, bringing the collector of Q19 (LO BAND) high. This information goes to the A6A10 Miscellaneous Bias/Relay Driver to control the A6A1 RF input switch. Q20 inverts the signal and drives amplifier A4A, producing a signal which is approximately +17 V when Band A is valid and approximately -8 V otherwise. This signal is used throughout the A6A11 Slope Generator. When pins 2 and 12 of U9 are both high, Band F is active. The output of U3B is low, turning Q22 off, and bringing the collector of Q22 (and Band F line) high. At the same time,me, Q19 turns on, bringing the LO BAND line low.

U3A decoder is enabled when pin 2 of U9 is low. Pins 5 and 12 of U9 have coded information giving harmonic numbers as shown in Table 1.

Table 1. Bandswitch Decoding

Band	B2 (pin 12)	B1 (pin 5)	N
B	0	1	1
C	1	0	2
D	1	1	3
E	0	0	4

This information is decoded by U3A and amplified by U5. The outputs of U5 are approximatley +3 V when a band is valid and approximatley -22 V otherwise. These signals are used to drive FET switches on the A6A11 Slope Generator and the A6A12 YTX Driver.

Preselector Peak Ⓑ

A second latch, U10, receives the same six lines a U9, but receives a different strobe, LCK5. This strobe is valid when the six lines have preselector peaking information. The outputs of this latch drive eight bits of a DAC which produces 0 to 10 V at the output of U4B corresponding to DAC values of 0.00 to 63.75. This voltage goes to the A6A12 YTX Driver. This circuit is used to adjust the tacking of the YTX when [PRESELECTOR PEAK] or [SHIFT] [GHz], [SHIFT] [+dBm], or [SHIFT] [dB] is keyed in.

Hysteresis, Sample-Hold Control, and Filter Capacitor Ⓓ

U8 is a Quad D-Latch which is used to decode information relating to Hysteresis, Sample and Hold, and Filter Capacitor information. Four lines from the 50-wire Instrument Bus go to the inuts of the latch. The latch is strobed when these lines have valid RF Module information. The instrument controller is able to connect the filter capacitor across the YTX, and control the Hysteresis and Sample and Hold circuits on the YTX Driver.

Slope Offset Ⓒ

U7 receives the -0.525 V/GHz signal from the A6A12 YTX Driver, amplifies and offsets it such that a +1.83 V/GHz ramp centered about 6 V is produced at TP8. Q11 to Q15 and associated circuitry produce the offset for each band, and R2 varies the A-Band offset to position the A-Band slope breakpoints.

Slope Breakpoint Generator Ⓔ

The signal at TP8 has a maximum range on Band C (5.8 to 12.5 GHz, second harmonic) of approximately 0 to 12 V. This signal is applied to two voltage dividers R36/R37 and R38/R39, which drive the positive inputs to U6A and U6B respectively. The voltage at the inputs to these op amps is clamped by CR5 and CR6 such that U6A sees only the first half of the full band ramp and U6B sees only the second half. In this manner, each full band is divided into two segments with one breakpoint in the center. Both U6A and U6B are configured for a gain of 2 and an offset of approximately -6.2 V, for a 0 V output at midband and unity gain overall.

Upper Segment Generator Ⓕ and Lower Segment Generator Ⓖ

The outputs of U6 drive variable gain amplifiers as shown in Figure 1.

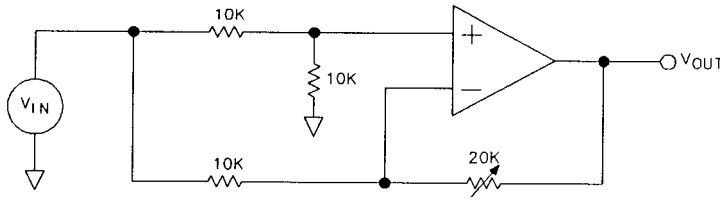

Figure 1. Variable Gain Amplifier, Simplified Schematic

When the 20 K potentiometer is set to zero, the amplifier has a gain of $+1/2$; when set to 20 K, the gain is $-1/2$; and when set to 10 K, the gain is zero. FETs Q1 to Q10 switch in different 20 K potentiometers for the five bands. The outputs for the two segments at U2 are summed together in U1. A waveform similar to Figure 2 is present at the output of U2B if a full band is swept (for example, 5.8 to 12.5 GHz), and the oscilloscope horizontal input is connected to the sweep output of the analyzer. Similarly, the output of U2A will appear as shown in Figure 3.

Slope Output Ⓗ

Both waveforms (Figure 2 and Figure 3) are summed together at U1 to form a current source with Q16 to drive the slope attenuator in the A6A3 Last Converter. The average output current is set by slope gain adjustment R84.

The slope attenuator in the A6A3 Last Converter varies the gain of the 21.4 MHz IF with the collector current of Q16 providing gain correction that varies with frequency. Within each band, there is independent control over two halves of the band, and IF gain that increases or decreases with increasing frequency.

When Band F (external mixer) is selected, Q18 and Q21 provide additional gain to make up for the conversion loss of the external mixer.

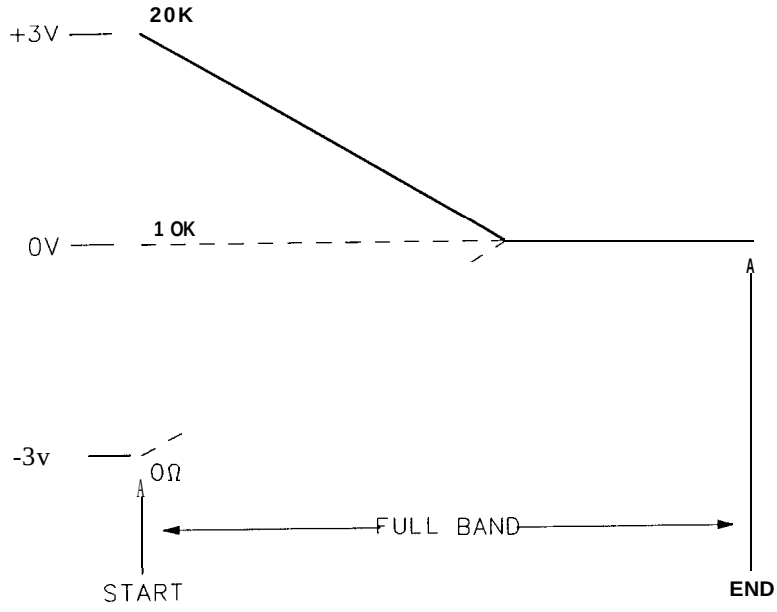

Figure 2. **U2B** Output Waveform

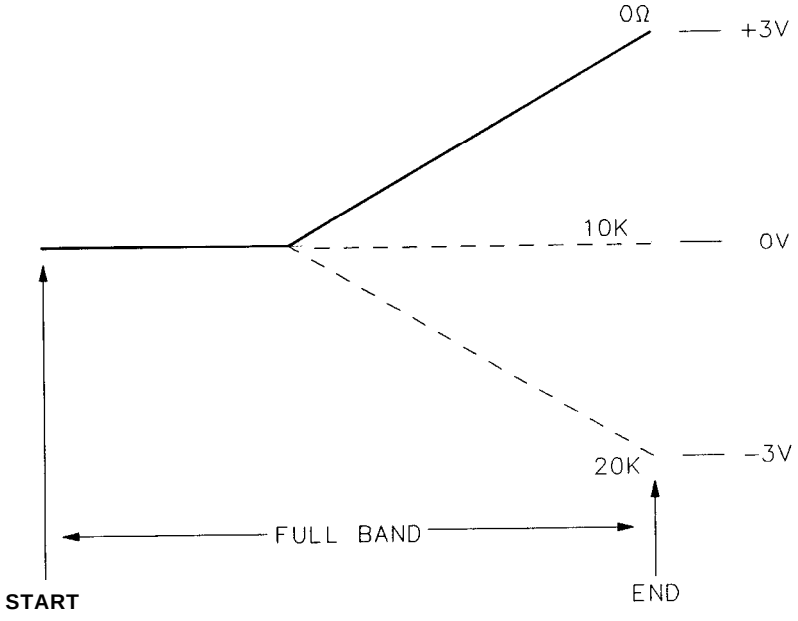

Figure 3. **U2A** Output Waveform

HP Part Number 85660-60126

A6A11 Slope Generator

Reference Designation	HP Part Number	C D	Qty	Description	Mfr Code	Mfr Part Number
A6A11	85660-60126	9	1	BOARD ASSEMBLY, SLOPE GENERATOR (SERIAL PREFIXES: 2410A - 2611A)	28480	85660-60126
A6A11C1	0180-0291	3	1	CAPACITOR-FXD 1UF+-10% 35VDC TA	56289	150D105X9035A2-DYS
A6A11C2	0160-3877	5	1	CAPACITOR-FXD 100PF +-20% 200VDC CER	04222	SR202C101MAAH
A6A11C3	0180-0229	7	1	CAP-FXD 33uF 10 V TA	56289	150D336X9010B2-DYS
A6A11C4	0180-0116	1	1	CAPACITOR-FXD 6.8UF+-10% 35VDC TA	56289	150D685X9035B2-DYS
A6A11C5	0180-1746	5	1	CAPACITOR-FXD 15UF+-10% 20VDC TA	56289	150D156X9020B2-DYS
A6A11C6	0180-0116	1	1	CAPACITOR-FXD 6.8UF+-10% 35VDC TA	56289	1500685X903582-DYS
A6A11CR1	1901-1067	4	1	DIODE-SWITCHING 125V 175MA 60NS DO-35	27014	FDH444
A6A11CR2	1901-1067	4	1	DIODE-SWITCHING 125V 175MA 60NS DO-35	27014	FDH444
A6A11CR3	1901-1067	4	1	DIODE-SWITCHING 125V 175MA 60NS DO-35	27014	FDH444
A6A11CR4	1901-1067	4	1	DIODE-SWITCHING 125V 175MA 60NS DO-35	27014	FDH444
A6A11CR5	1901-1067	4	1	DIODE-SWITCHING 125V 175MA 60NS DO-35	27014	FDH444
A6A11CR6	1901-1067	4	1	DIODE-SWITCHING 125V 175MA 60NS DO-35	27014	FDH444
A6A11CR7	1901-1067	4	1	DIODE-SWITCHING 125V 175MA 60NS DO-35	27014	FDH444
A6A11CR8	1901-1067	4	1	DIODE-SWITCHING 125V 175MA 60NS DO-35	27014	FDH444
A6A11CR9	1901-1067	4	1	DIODE-SWITCHING 125V 175MA 60NS DO-35	27014	FDH444
A6A11CR10	1901-1067	4	1	DIODE-SWITCHING 125V 175MA 60NS DO-35	27014	FDH444
A6A11CR11	1901-1067	4	1	DIODE-SWITCHING 125V 175MA 60NS DO-35	27014	FDH444
A6A11CR12	1901-1067	4	1	DIODE-SWITCHING 125V 175MA 60NS DO-35	27014	FDH444
A6A11CR13	1901-1067	4	1	DIODE-SWITCHING 125V 175MA 60NS DO-35	27014	FDH444
A6A11CR14	1901-1067	4	1	DIODE-SWITCHING 125V 175MA 60NS DO-35	27014	FDH444
A6A11CR15	1901-1067	4	1	DIODE-SWITCHING 125V 175MA 60NS DO-35	27014	FDH444
A6A11CR16	1901-1067	4	1	DIODE-SWITCHING 125V 175MA 60NS DO-35	27014	FDH444
A6A11CR17	1901-0518	8	1	DIODE-SCHOTTKY SM SIG		5082-2800
A6A11MP2	1480-0073	6	2	PIN-ROLL .062-IN-DIA .25-IN-LG BE-CU	72962	99-012-062-0250
A6A11MP3	4040-0749	4	2	EXTR PC BD BRN	28480	4040-0749
A6A11Q1	1855-0414	4	1	TRANSISTOR J-FET 2N4393 N-CHAN D-MODE TO	17856	2N4393
A6A11Q2	1855-0414	4	1	TRANSISTOR J-FET 2N4393 N-CHAN D-MODE TO	17856	2N4393
A6A11Q3	1855-0414	4	1	TRANSISTOR J-FET 2N4393 N-CHAN D-MODE TO	17856	2N4393
A6A11Q4	1855-0414	4	1	TRANSISTOR J-FET 2N4393 N-CHAN D-MODE TO	17856	2N4393
A6A11Q5	1855-0414	4	1	TRANSISTOR J-FET 2N4393 N-CHAN D-MODE TO	17856	2N4393
A6A11Q6	1855-0414	4	1	TRANSISTOR J-FET 2N4393 N-CHAN D-MODE TO	17856	2N4393
A6A11Q7	1855-0414	4	1	TRANSISTOR J-FET 214393 N-CHAN D-MODE TO	17856	2N4393
A6A11Q8	1855-0414	4	1	TRANSISTOR J-FET 2N4393 N-CHAN D-MODE TO	17856	2N4393
A6A11Q9	1855-0414	4	1	TRANSISTOR J-FET 2N4393 N-CHAN D-MODE TO	17856	2N4393
A6A11Q10	1855-0414	4	1	TRANSISTOR J-FET 2N4393 N-CHAN D-MODE TO	17856	2N4393
A6A11Q11	1854-0477	7	1	TRANSISTOR NPN 2N2222A SI TO-18 PD=500MW	04713	2N2222A
A6A11Q12	1854-0477	7	1	TRANSISTOR NPN 2N2222A SI TO-18 PD=500MW	04713	2N2222A
A6A11Q13	1854-0477	7	1	TRANSISTOR NPN 2N2222A SI TO-18 PD=500MW	04713	2N2222A
A6A11Q14	1854-0477	7	1	TRANSISTOR NPN 2N2222A SI TO-18 PD=500MW	04713	2N2222A
A6A11Q15	1854-0477	7	1	TRANSISTOR NPN 2N2222A SI TO-18 PD=500MW	04713	2N2222A
A6A11Q16	1854-0637	1	1	TRANSISTOR NPN 2N2219A SI TO-5 PD=800MW	04713	2N2219A
A6A11Q17	1853-0281	9	1	TRANSISTOR PNP 2N2907A SI TO-18 PD=400MW	04713	2N2907A
A6A11Q18	1853-0281	9	1	TRANSISTOR PNP 2N2907A SI TO-18 PD=400MW	04713	2N2907A
A6A11Q19	1854-0477	7	1	TRANSISTOR NPN 2N2222A SI TO-18 PD=500MW	04713	2N2222A
A6A11Q20	1854-0477	7	1	TRANSISTOR NPN 2N2222A SI TO-18 PD=500MW	04713	2N2222A

**Indicates factory-selected value*

HP Part Number 85660-60126

A6A11 Slope Generator

Reference Designation	HP Part Number	CD	Qty	Description	Mfr Code	Mfr Part Number
A6A11Q21	1854-0477	7	1	TRANSISTOR NPN 2N2222A SI TO-18 PD=500MW	04713	2N2222A
A6A11Q22	1854-0477	7	1	TRANSISTOR NPN 2N2222A SI TO-18 PD=500MW	04713	2N2222A
A6A11Q23	1853-0281	9	1	TRANSISTOR PNP 2N2907A SI TO-18 PD=400MW	04713	2N2907A
A6A11Q24	1853-0281	9	1	TRANSISTOR PNP 2N2907A SI TO-18 PD=400MW	04713	2N2907A
A6A11R1	0757-0440	7	1	RESISTOR 7.5K +-1% .125W TF TC=O+-100	19701	SFR25H
A6A11R2*	0698-3453	2	1	RESISTOR 196K 1% .125W TF TC=O+-100	19701	SFR25H
A6A11R3	0757-0465	6	1	RESISTOR 100K +-1% .125W TF TC=O+-100	19701	SFR25H
A6A11R4	0698-3260	9	1	RESISTOR 464K 1% .125W TF TC=O+-100	19701	SFR25H
A6A11R5	0757-0465	6	1	RESISTOR 100K +-1% .125W TF TC=O+-100	19701	SFR25H
A6A11R6	0757-0199	3	1	RESISTOR 21.5K +-1% .125W TF TC=O+-100	19701	SFR25H
A6A11R7	0757-0465	6	1	RESISTOR 100K +-1% .125W TF TC=O+-100	19701	SFR25H
A6A11R8	0757-0290	5	1	RESISTOR 6.19K +-1% .125W TF TC=O+-100	19701	SFR25H
A6A11R9	0757-0465	6	1	RESISTOR 100K +-1% .125W TF TC=O+-100	19701	SFR25H
A6A11R10	0698-3150	6	1	RESISTOR 2.37K 1% .125W TF TC=O+-100	19701	SFR25H
A6A11R11	0757-0465	6	1	RESISTOR 100K +-1% .125W TF TC=O+-100	19701	SFR25H
A6A11R12	0757-0442	9	1	RESISTOR 10K +-1% .125W TF TC=O+-100	19701	SFR25H
A6A11R13	0757-0123	3	1	RESISTOR 34.8K +-1% .125W TF TC=O+-100	19701	SFR25H
A6A11R14	0698-0084	9	1	RESISTOR 2.15K 1% .125W TF TC=O+-100	19701	SFR25H
A6A11R15	0757-0280	3	1	RESISTOR 1K +-1% .125W TF TC=O+-100	19701	SFR25H
A6A11R16	0757-1094	9	1	RESISTOR 1.47K +-1% .125W TF TC=O+-100	19701	SFR25H
A6A11R17	0757-0280	3	1	RESISTOR 1K +-1% .125W TF TC=O+-100	19701	SFR25H
A6A11R18	0757-0416	7	1	RESISTOR 511 +-1% .125W TF TC=O+-100	19701	SFR25H
A6A11R19	0757-0416	7	1	RESISTOR 511 +-1% .125W TF TC=O+-100	19701	SFR25H
A6A11R20	0757-0416	7	1	RESISTOR 511 +-1% .125W TF TC=O+-100	19701	SFR25H
A6A11R21	0757-0465	6	1	RESISTOR 100K +-1% .125W TF TC=O+-100	19701	SFR25H
A6A11R22	0757-0465	6	1	RESISTOR 100K +-1% .125W TF TC=O+-100	19701	SFR25H
A6A11R23	0698-3260	3	1	RESISTOR 464K 1% .125W TF TC=O+-100	19701	SFR25H
A6A11R36	0757-0465	6	1	RESISTOR 100K +-1% .125W TF TC=O+-100	19701	SFR25H
A6A11R37	0757-0465	6	1	RESISTOR 100K +-1% .125W TF TC=O+-100	19701	SFR25H
A6A11R38	0757-0465	6	1	RESISTOR 100K +-1% .125W TF TC=O+-100	19701	SFR25H
A6A11R39	0757-0465	6	1	RESISTOR 100K +-1% .125W TF TC=O+-100	19701	SFR25H
A6A11R40	0757-0442	3	1	RESISTOR 10K +-1% .125W TF TC=O+-100	19701	SFR25H
A6A11R41	0757-0442	3	1	RESISTOR 10K +-1% .125W TF TC=O+-100	19701	SFR25H
A6A11R42	0757-0442	3	1	PESISTOR 10K +-1% .125W TF TC=O+-100	19701	SFR25H
A6A11R43	0757-0442	3	1	RESISTOR 10K +-1% .125W TF TC=O+-100	19701	SFR25H
A6A11R44	0698-0085	3	1	RESISTOR 2.61K 1% .125W TF TC=O+-100	19701	SFR25H
A6A11R45	0757-0442	3	1	RESISTOR 10K +-1% .125W TF TC=O+-100	19701	SFR25H
A6A11R46	3757-0442	3	1	RESISTOR 10K +-1% .125W TF TC=O+-100	19701	SFR25H
A6A11R47	0757-0442	3	1	RESISTOR 10K +-1% .125W TF TC=O+-100	19701	SFR25H
A6A11R48	2100-3353	3	1	IESISTOR-TRMR 20K 10% TKF SIDE-ADJ l-TRN	32997	3386X-Y46-203
A6A11R49	3683-3955	3	1	RESISTOR 3.9M 5% .25W CC TC=-900/+1100	01121	C83955
A6A11R50	0757-0465	6	1	RESISTOR 100K +-1% .125W TF TC=O+-100	19701	SFR25H
A6A11R51	2100-3353	3	1	IESISTOR-TRMR 20K 10% TKF SIDE-ADJ l-TRN	32997	3386X-Y46-203
A6A11R52	3683-3955	3	1	RESISTOR 3.9M 5% .25W CC TC=-900/+1100	01121	C83955
A6A11R53	3757-0465	6	1	RESISTOR 100K +-1% .125W TF TC=O+-100	19701	SFR25H
A6A11R54	2100-3353	3	1	IESISTOR-TRMR 20K 10% TKF SIDE-ADJ l-TRN	32997	3386X-146-203
A6A11R55	1683-3955	3	1	RESISTOR 3.9M 5% .25W CC TC=-900/+1100	01121	C83955
A6A11R56	1757-0465	6	1	RESISTOR 100K +-1% .125W TF TC=O+-100	19701	SFR25H

**Indicates factory-selected value*

HP Part Number 85660-60126

A6A11 Slope Generator

Reference Designation	HP Part Number	C D	Qty	Description	Mfr Code	Mfr Part Number
A6A11R57	2100-3353	8	1	RESISTOR-TRMR 20K 10% TKF SIDE-ADJ l-TRN	32997	3386X-146-203
A6A11R58	0683-3955	8	1	RESISTOR 3.9M 5% .25W CC TC=-900/+1100	01121	CB3955
A6A11R59	0757-0465	6	1	RESISTOR 100K +-1% .125W TF TC=O+-100	19701	SFR25H
A6A11R60	2100-3353	8	1	RESISTOR-TRMR 20K 10% TKF SIDE-ADJ l-TRN	32997	3386X-Y46-203
A6A11R61	0683-3955	8	1	RESISTOR 3.9M 5% .25W CC TC=-900/+1100	01121	CB3955
A6A11R62	0757-0465	6	1	RESISTOR 100K +-1% .125W TF TC=O+-100	19701	SFR25H
A6A11R63	0757-0442	9	1	RESISTOR 10K +-1% .125W TF TC=O+-100	19701	SFR25H
A6A11R64	0757-0442	9	1	RESISTOR 10K +-1% .125W TF TC=O+-100	19701	SFR25H
A6A11R65	0757-0442	9	1	RESISTOR 10K +-1% .125W TF TC=O+-100	19701	SFR25H
A6A11R66	2100-3353	8	1	RESISTOR-TRMR 20K 10% TKF SIDE-ADJ l-TRN	32997	3386X-Y46-203
A6A11R67	0683-3955	8	1	RESISTOR 3.9M 5% .25W CC TC=-900/+1100	01121	CB3955
A6A11R68	0757-0465	6	1	RESISTOR 100K +-1% .125W TF TC=O+-100	19701	SFR25H
A6A11R69	2100-3353	8	1	RESISTOR-TRMR 20K 10% TKF SIDE-ADJ l-TRN	32997	3386X-Y46-203
A6A11R70	0683-3955	8	1	RESISTOR 3.9M 5% .25W CC TC=-900/+1100	01121	CB3955
A6A11R71	0757-0465	6	1	RESISTOR 100K +-1% .125W TF TC=O+-100	19701	SFR25H
A6A11R72	2100-3353	8	1	RESISTOR-TRMR 20K 10% TKF SIDE-ADJ l-TRN	32997	3386X-Y46-203
A6A11R73	0683-3955	8	1	RESISTOR 3.9M 5% .25W CC TC=-900/+1100	01121	C83955
A6A11R74	0757-0465	6	1	RESISTOR 100K +-1% .125W TF TC=O+-100	19701	SFR25H
A6A11R75	2100-3353	8	1	RESISTOR-TRMR 20K 10% TKF SIDE-ADJ l-TRN	32997	3386X-Y46-203
A6A11R76	0683-3955	8	1	RESISTOR 3.9M 5% .25W CC TC=-900/+1100	01121	C83955
A6A11R77	0757-0465	6	1	RESISTOR 100K +-1% .125W TF TC=O+-100	19701	SFR25H
A6A11R78	2100-3353	8	1	RESISTOR-TRMR 20K 10% TKF SIDE-ADJ l-TRN	32997	3386X-Y46-203
A6A11R79	0683-3955	8	1	RESISTOR 3.9M 5% .25W CC TC=-900/+1100	01121	C83955
A6A11R80	0757-0465	6	1	RESISTOR 100K +-1% .125W TF TC=O+-100	19701	SFR25H
A6A11R81	0698-3136	8	1	RESISTOR 17.8K 1% .125W TF TC=O+-100	19701	SFR25H
A6A11R82	0698-3136	8	1	RESISTOR 17.8K 1% .125W TF TC=O+-100	19701	SFR25H
A6A11R83	0698-3159	5	1	RESISTOR 26.1K 1% .125W TF TC=O+-100	19701	SFR25H
A6A11R84	2100-3273	1	1	RESISTOR-TRMR 2K 10% TKF SIDE-ADJ l-TRN	32997	3386X-Y46-202
A6A11R85	0698-3156	2	1	RESISTOR 14.7K 1% .125W TF TC=O+-100	19701	SFR25H
A6A11R86	0757-0280	3	1	RESISTOR 1K +-1% .125W TF TC=O+-100	19701	SFR25H
A6A11R88	0698-3156	2	1	RESISTOR 14.7K 1% .125W TF TC=O+-100	19701	SFR25H
A6A11R89	0757-0442	9	1	RESISTOR 10K +-1% .125W TF TC=O+-100	19701	SFR25H
A6A11R90	1757-0438	3	1	RESISTOR 5.11K +-1% .125W TF TC=O+-100	19701	SFR25H
A6A11R91	1757-0416	7	1	RESISTOR 511 +-1% .125W TF TC=O+-100	19701	SFR25H
A6A11R92	0757-0290	5	1	RESISTOR 6.19K +-1% .125W TF TC=O+-100	19701	SFR25H
A6A11R93	1757-0280	3	1	RESISTOR 1K +-1% .125W TF TC=O+-100	19701	SFR25H
A6A11R94	1757-0280	3	1	RESISTOR 1K +-1% .125W TF TC=O+-100	19701	SFR25H
A6A11R95	0757-0280	3	1	RESISTOR 1K +-1% .125W TF TC=O+-100	19701	SFR25H
A6A11R96	0757-0280	3	1	RESISTOR 1K +-1% .125W TF TC=O+-100	19701	SFR25H
A6A11R97	0757-0465	6	1	RESISTOR 100K 1% .125W F TC=O+-100	24546	C4-1/8-TO-1003-F
A6A11R98	3698-3157	3	1	RESISTOR 19.6K 1% .125W TF TC=O+-100	19701	SFR25H
A6A11R99	0698-3157	3	1	RESISTOR 19.6K 1% .125W TF TC=O+-100	19701	SFR25H
A6A11R100	1698-3157	3	1	RESISTOR 19.6K 1% .125W TF TC=O+-100	19701	SFR25H
A6A11R101	3698-3157	3	1	RESISTOR 19.6K 1% .125W TF TC=O+-100	19701	SFR25H
A6A11R102	0757-0442	9	1	RESISTOR 10K 1% .125W F TC=O+-100	24546	C4-1/8-TO-1002-F
A6A11R103	0757-0463	4	1	RESISTOR 82.5K +-1% .125W TF TC=O+-100	19701	SFR25H
A6A11R104	1757-0438	3	1	RESISTOR 5.11K +-1% .125W TF TC=O+-100	19701	SFR25H

**Indicates factory-selected value*

HP Part Number 85660-60126

A6A11 Slope Generator

Reference Designation	HP Part Number	C D	Qty	Description	Mfr Code	Mfr Part Number
A6A11R105	0757-0438	.	1	RESISTOR 5.11K +-1% .125W TF TC=O+-100	19701	SFR25H
A6A11R106	0757-0200	7	1	RESISTOR 5.62K +-1% .125W TF TC=O+-100	19701	SFR25H
A6A11R107	0757-0346	2	1	RESISTOR 10 +-1% .125W TF TC=O+-100	91637	CMF-55-1, T-l
A6A11R108	0757-0346	2	1	RESISTOR 10 +-1% .125W TF TC=O+-100	91637	CMF-55-1. T-l
A6A11R109	0757-0346	2	1	RESISTOR 10 +-1% .125W TF TC=O+-100	91637	CMF-55-1, T-l
A6A11R110	0757-0346	2	1	RESISTOR 10 +-1% .125W TF TC=O+-100	91637	CMF-55-1, T-l
A6A11R111	0757-0465	6	1	RESISTOR 100K +-1% .125W TF TC=O+-100	19701	SFR25H
A6A11R113	0757-0280	3	1	RESISTOR 1K +-1% .125W TF TC=O+-100	19701	SFR25H
A6A11R114	0757-0442	9	1	RESISTOR 10K +-1% .125W TF TC=O+-100	19701	SFR25H
A6A11R115	0757-0442	9	1	RESISTOR 10K +-1% .125W TF TC=O+-100	19701	SFR25H
A6A11R116	3757-0442	9	1	RESISTOR 10K +-1% .125W TF TC=O+-100	19701	SFR25H
A6A11R117	1757-0442	9	1	RESISTOR 10K +-1% .125W TF TC=O+-100	19701	SFR25H
A6A11R118	0757-0442	9	1	RESISTOR 10K +-1% .125W TF TC=O+-100	19701	SFR25H
A6A11R119	0757-0442	9	1	RESISTOR 10K +-1% .125W TF TC=O+-100	19701	SFR25H
A6A11R120	1757-0442	9	1	RESISTOR 10K +-1% .125W TF TC=O+-100	19701	SFR25H
A6A11TP1	1251-0600	0	1	CONNECTOR-SGL CONT PIN 1.14-MM-BSC-SZ SQ	27264	16-06-0034
A6A11TP2	1251-0600	0	1	CONNECTOR-SGL CONT PIN 1.14-MM-BSC-SZ SQ	27264	16-06-0034
A6A11TP3	1251-0600	0	1	CONNECTOR-SGL CONT PIN 1.14-MM-BSC-SZ SQ	27264	16-06-0034
A6A11TP4	1251-0600	0	1	CONNECTOR-SGL CONT PIN 1.14-MM-BSC-SZ SQ	27264	16-06-0034
A6A11TP5	1251-0600	0	1	CONNECTOR-SGL CONT PIN 1.14-MM-BSC-SZ SQ	27264	16-06-0034
A6A11TP6	1251-0600	C	1	CONNECTOR-SGL CONT PIN 1.14-MM-BSC-SZ SQ	27264	16-06-0034
A6A11TP7	1251-0600	C	1	CONNECTOR-SGL CONT PIN 1.14-MM-BSC-SZ SQ	27264	16-06-0034
A6A11TP8	1251-0600	C	1	CONNECTOR-SGL CONT PIN 1.14-MM-BSC-SZ SQ	27264	16-06-0034
A6A11U1	1826-1058	3	1	IC OP AMP GP 8-TO-99 PKG	06665	OP-02CJ
A6A11U2	5081-8117	3	1	SCREEN 1826-0092	28480	5081-8117
A6A11U3	1820-1281	2	1	IC DCDR TTL LS 2-TO-4-LINE DUAL	01295	SN74LS139AN
A6A11U4	5081-8117	3	1	SCREEN 1826-0092	28480	5081-8117
A6A11U5	1826-0161	7	1	IC OP AMP GP QUAD 14-DIP-P PKG	27014	LM324N
A6A11U6	5081-8117	3	1	SCREEN 1826-0092	28480	5081-8117
A6A11U7	1826-1058	3	1	IC OP AMP GP 8-TO-99 PKG	06665	OP-02CJ
A6A11U8	1820-1195	7	1	IC FF TTL LS D-TYPE POS-EDGE-TRIG COM CL	01295	SN74LS175N
A6A11U9	1820-1196	8	1	IC FF TTL LS D-TYPE POS-EDGE-TRIG COM CL	01295	SN74LS174N
A6A11U10	1820-1196	8	1	IC FF TTL LS D-TYPE POS-EDGE-TRIG COM CL	01295	SN74LS174N
A6A11U11	1826-0188	8	1	D/A 8-BIT 16-CERDIP BPLR	04713	MC1408L-8
A6A11VR1	1902-0625	0	1	DIODE-ZNR 1N829 6.2V 5% DO-35 PD=.25W TC	04713	1N829
A6A11VR2	1902-0041	4	1	DIODE-ZNR 5.11V 5% DO-35 PD=.4W	04713	
A6A11VR3	1902-3203	6	1	DIODE-ZNR 14.7V 5% DO-35 PD=.4W	04713	
A6A11VR4	1902-0025	4	1	DIODE-ZNR 10V 5% DO-35 PD=.4W TC=+.06%	04713	

**Indicates factory-selected value*

HP Part Number 85660-60238

A6A11 Slope Generator

Reference Designation	HP Part Number	CD	Qty	Description	Mfr Code	Mfr Part Number
A6A11	85660-60238	4	1	BOARD ASSEMBLY, SLOPE GENERATOR (SERIAL PREFIX: 2613A)	28480	85660-60238
A6A11C1	0180-0291	3	1	CAPACITOR-FXD 1UF+-10% 35VDC TA	56289	150D105X9035A2-DYS
A6A11C2	0160-3877	5	1	CAPACITOR-FXD 100PF +-20% 200VDC CER	04222	SR202C101MAAH
A6A11C3	0180-0229	7	1	CAP-FXD 33uF 10 V TA	56289	150D336X9010B2-DYS
A6A11C4	0180-0116	1	1	CAPACITOR-FXD 6.8UF+-10% 35VDC TA	56289	150D685X9035B2-DYS
A6A11C5	0180-1746	5	1	CAPACITOR-FXD 15UF+-10% 20VDC TA	56289	150D156X9020B2-DYS
A6A11C6	0180-0116	1	1	CAPACITOR-FXD 6.8UF+-10% 35VDC TA	56289	150D685X9035B2-DYS
A6A11CR1	1901-1067	4	1	DIODE-SWITCHING 125V 175MA 60NS DO-35	27014	FDH444
A6A11CR2	1901-1067	4	1	DIODE-SWITCHING 125V 175MA 60NS DO-35	27014	FDH444
A6A11CR3	1901-1067	4	1	DIODE-SWITCHING 125V 175MA 60NS DO-35	27014	FDH444
A6A11CR4	1901-1067	4	1	DIODE-SWITCHING 125V 175MA 60NS DO-35	27014	FDH444
A6A11CR5	1901-1067	4	1	DIODE-SWITCHING 125V 175MA 60NS DO-35	27014	FDH444
A6A11CR6	1901-1067	4	1	DIODE-SWITCHING 125V 175MA 60NS DO-35	27014	FDH444
A6A11CR7	1901-1067	4	1	DIODE-SWITCHING 125V 175MA 60NS DO-35	27014	FDH444
A6A11CR8	1901-1067	4	1	DIODE-SWITCHING 125V 175MA 60NS DO-35	27014	FDH444
A6A11CR9	1901-1067	4	1	DIODE-SWITCHING 125V 175MA 60NS DO-35	27014	FDH444
A6A11CR10	1901-1067	4	1	DIODE-SWITCHING 125V 175MA 60NS DO-35	27014	FDH444
A6A11CR11	1901-1067	4	1	DIODE-SWITCHING 125V 175MA 60NS DO-35	27014	FOH444
A6A11CR12	1901-1067	4	1	DIODE-SWITCHING 125V 175MA 60NS DO-35	27014	FDH444
A6A11CR13	1901-1067	4	1	DIODE-SWITCHING 125V 175MA 60NS DO-35	27014	FDH444
A6A11CR14	1901-1067	4	1	DIODE-SWITCHING 125V 175MA 60NS DO-35	27014	FDH444
A6A11CR15	1901-1067	4	1	DIODE-SWITCHING 125V 175MA 60NS DO-35	27014	FDH444
A6A11CR16	1901-1067	4	1	DIODE-SWITCHING 125V 175MA 60NS DO-35	27014	FDH444
A6A11CR17	1901-0518	8	1	DIODE-SCHOTTKY SM SIG		5082-2800
A6A11MP1				NOT ASSIGNED		
A6A11MP2	1480-0073	6	2	PIN-ROLL .062-IN-DIA .25-IN-LG BE-CU	72962	99-012-062-0250
A6A11MP3	4040-0749	4	2	EXTR-PC BD BRN POLYC .062-IN-BD-THKNS		
A6A11Q1	1855-0414	4	1	TRANSISTOR J-FET 2N4393 N-CHAN D-MODE	17856	2N4393
A6A11Q2	1855-0414	4	1	TRANSISTOR J-FET 2N4393 N-CHAN D-MODE	17856	2N4393
A6A11Q3	1855-0414	4	1	TRANSISTOR J-FET 2N4393 N-CHAN D-MODE	17856	2N4393
A6A11Q4	1855-0414	4	1	TRANSISTOR J-FET 2N4393 N-CHAN D-MODE	17856	2N4393
A6A11Q5	1855-0414	4	1	TRANSISTOR J-FET 2N4393 N-CHAN D-MODE	17856	2N4393
A6A11Q6	1855-0414	4	1	TRANSISTOR J-FET 2N4393 N-CHAN D-MODE	17856	2N4393
A6A11Q7	1855-0414	4	1	TRANSISTOR J-FET 2N4393 N-CHAN D-MODE	17856	2N4393
A6A11Q8	1855-0414	4	1	TRANSISTOR J-FET 2N4393 N-CHAN D-MODE	17856	2N4393
A6A11Q9	1855-0414	4	1	TRANSISTOR J-FET 2N4393 N-CHAN D-MODE	17856	2N4393
A6A11Q10	1855-0414	4	1	TRANSISTOR J-FET 2N4393 N-CHAN D-MODE	17856	2N4393
A6A11Q11	1854-0477	7	1	TRANSISTOR NPN 2N2222A SI TO-18 PD=500MW	04713	2N2222A
A6A11Q12	1854-0477	7	1	TRANSISTOR NPN 2N2222A SI TO-18 PD=500MW	04713	2N2222A
A6A11Q13	1854-0477	7	1	TRANSISTOR NPN 2N2222A SI TO-18 PD=500MW	04713	2N2222A
A6A11Q14	1854-0477	7	1	TRANSISTOR NPN 2N2222A SI TO-18 PD=500MW	04713	2N2222A
A6A11Q15	1854-0477	7	1	TRANSISTOR NPN 2N2222A SI TO-18 PD=500MW	04713	2N2222A
A6A11Q16	1854-0637	1	1	TRANSISTOR NPN 2N2219A SI TO-5 PD=800MW	04713	2N2219A
A6A11Q17	1853-0281	9	1	TRANSISTOR PNP 2N2907A SI TO-18 PD=400MW	04713	2N2907A
A6A11Q18	1853-0281	9	1	TRANSISTOR PNP 2N2907A SI TO-18 PD=400MW	04713	2N2907A
A6A11Q19	1854-0477	7	1	TRANSISTOR NPN 2N2222A SI TO-18 PD=500MW	04713	2N2222A

**Indicates factory-selected value*

HP Part Number 85660-60238

A6A11 Slope Generator

Reference Designation	HP Part Number	C D	Qty	Description	Mfr Code	Mfr Part Number
A6A11Q20	1854-0472	2	1	TRANSISTOR NPN SI DARL PD=500MW	04713	MPS-A14
A6A11Q21	1854-0477	7	1	TRANSISTOR NPN 2N2222A SI TO-18 PD=500MW	04713	2N2222A
A6A11Q22	1854-0477	7	1	TRANSISTOR NPN 2N2222A SI TO-18 PD=500MW	04713	2N2222A
A6A11Q23	1853-0281	9	1	TRANSISTOR PNP 2N2907A SI TO-18 PD=400MW	04713	2N2907A
A6A11Q24	1853-0281	9	1	TRANSISTOR PNP 2N2907A SI TO-18 PD=400MW	04713	2N2907A
A6A11R1	0757-0440	7	1	RESISTOR 7.5K +-1% .125W TF TC=O+-100	19701	SFR25H
A6A11R2*	0698-3453	2	1	RESISTOR 196K 1% .125W TF TC=O+-100	19701	SFR25H
A6A11R3	0757-0465	6	1	RESISTOR 100K +-1% .125W TF TC=O+-100	19701	SFR25H
A6A11R4	0698-3260	9	1	RESISTOR 464K 1% .125W TF TC=O+-100	19701	SFR25H
A6A11R5	0757-0465	6	1	RESISTOR 100K +-1% .125W TF TC=O+-100	19701	SFR25H
A6A11R6	0757-0199	3	1	RESISTOR 21.5K +-1% .125W TF TC=O+-100	19701	SFR25H
A6A11R7	0757-0465	6	1	RESISTOR 100K +-1% .125W TF TC=O+-100	19701	SFR25H
A6A11R8	0757-0290	5	1	RESISTOR 6.19K +-1% .125W TF TC=O+-100	19701	SFR25H
A6A11R9	0757-0465	6	1	RESISTOR 100K +-1% .125W TF TC=O+-100	19701	SFR25H
A6A11R10	0698-3150	6	1	RESISTOR 2.37K 1% .125W TF TC=O+-100	19701	SFR25H
A6A11R11	0757-0465	6	1	RESISTOR 100K +-1% .125W TF TC=O+-100	19701	SFR25H
A6A11R12	0757-0442	9	1	RESISTOR 10K +-1% .125W TF TC=O+-100	19701	SFR25H
A6A11R13	0757-0123	3	1	RESISTOR 34.8K +-1% .125W TF TC=O+-100	19701	SFR25H
A6A11R14	3698-0084	9	1	RESISTOR 2.15K 1% .125W TF TC=O+-100	19701	SFR25H
A6A11R15	0757-0280	3	1	RESISTOR 1K +-1% .125W TF TC=O+-100	19701	SFR25H
A6A11R16	0757-1094	9	1	RESISTOR 1.47K +-1% .125W TF TC=O+-100	19701	SFR25H
A6A11R17	1757-0280	3	1	RESISTOR 1K +-1% .125W TF TC=O+-100	19701	SFR25H
A6A11R18	0757-0416	7	1	RESISTOR 511 +-1% .125W TF TC=O+-100	19701	SFR25H
A6A11R19	0757-0416	7	1	RESISTOR 511 +-1% .125W TF TC=O+-100	19701	SFR25H
A6A11R20	1757-0416	7	1	RESISTOR 511 +-1% .125W TF TC=O+-100	19701	SFR25H
A6A11R21	0757-0465	6	1	RESISTOR 100K +-1% .125W TF TC=O+-100	19701	SFR25H
A6A11R22	0757-0465	6	1	RESISTOR 100K +-1% .125W TF TC=O+-100	19701	SFR25H
A6A11R23	0698-3260	9	1	RESISTOR 464K 1% .125W TF TC=O+-100	19701	SFR25H
A6A11R36	0757-0465	6	1	RESISTOR 100K +-1% .125W TF TC=O+-100	19701	SFR25H
A6A11R37	0757-0465	6	1	RESISTOR 100K +-1% .125W TF TC=O+-100	19701	SFR25H
A6A11R38	0757-0465	6	1	RESISTOR 100K +-1% .125W TF TC=O+-100	19701	SFR25H
A6A11R39	0757-0465	6	1	RESISTOR 100K +-1% .125W TF TC=O+-100	19701	SFR25H
A6A11R40	0757-0442	9	1	RESISTOR 10K +-1% .125W TF TC=O+-100	19701	SFR25H
A6A11R41	0757-0442	9	1	RESISTOR 10K +-1% .125W TF TC=O+-100	19701	SFR25H
A6A11R42	0757-0442	9	1	RESISTOR 10K +-1% .125W TF TC=O+-100	19701	SFR25H
A6A11R43	0757-0442	9	1	RESISTOR 10K +-1% .125W TF TC=O+-100	19701	SFR25H
A6A11R44	0698-0085	0	1	RESISTOR 2.61K 1% .125W TF TC=O+-100	19701	SFR25H
A6A11R45	0757-0442	9	1	RESISTOR 10K +-1% .125W TF TC=O+-100	19701	SFR25H
A6A11R46	0757-0442	9	1	RESISTOR 10K +-1% .125W TF TC=O+-100	19701	SFR25H
A6A11R47	0757-0442	9	1	7ESISTOR 10K +-1% .125W TF TC=O+-100	19701	SFR25H
A6A11R48	2100-3353	8	1	IESISTOR-TRMR 20K 10% TKF SIDE-ADJ l-TRN	32997	3386X-Y46-203
A6A11R49	3683-3955	8	1	RESISTOR 3.9M 5% .25W CC TC=-900/+1100	01121	C83955
A6A11R50	0757-0465	6	1	RESISTOR 100K +-1% .125W TF TC=O+-100	19701	SFR25H
A6A11R51	2100-3353	8	1	IESISTOR-TRMR 20K 10% TKF SIDE-ADJ l-TRN	32997	3386X-146-203
A6A11R52	1683-3955	8	1	RESISTOR 3.9M 5% .25W CC TC=-900/+1100	01121	C83955
A6A11R53	1757-0465	6	1	RESISTOR 100K +-1% .125W TF TC=O+-100	19701	SFR25H
A6A11R54	2100-3353	8	1	IESISTOR-TRMR 20K 10% TKF SIDE-ADJ I-TRN	32997	3386X-Y46-203
A6A11R55	0683-3955	8	1	RESISTOR 3.9M 5% .25W CC TC=-900/+1100	01121	C83955

**Indicates facto y-selected value*

HP Part Number 85660-60238

A6A11 Slope Generator

Reference Designation	HP Part Number	CD	Qty	Description	Mfr Code	Mfr Part Number
A6A11R56	0757-0465	6	1	RESISTOR 100K +-1% .125W TF TC=O+-100	19701	SFR25H
A6A11R57	2100-3353	8	1	RESISTOR-TRMR 20K 10% TKF SIDE-ADJ l-TRN	32997	3386X-Y46-203
A6A11R58	0683-3955	8	1	RESISTOR 3.9M 5% .25W CC TC=-900/+1100	01121	CB3955
A6A11R59	0757-0465	6	1	RESISTOR 100K +-1% .125W TF TC=O+-100	19701	SFR25H
A6A11R60	2100-3353	8	1	RESISTOR-TRMR 20K 10% TKF SIDE-ADJ l-TRN	32997	3386X-146-203
A6A11R61	0683-3955	8	1	RESISTOR 3.9M 5% .25W CC TC=-900/+1100	01121	CB3955
A6A11R62	0757-0465	6	1	RESISTOR 100K +-1% .125W TF TC=O+-100	19701	SFR25H
A6A11R63	0757-0442	9	1	RESISTOR 10K +-1% .125W TF TC=O+-100	19701	SFR25H
A6A11R64	0757-0442	9	1	RESISTOR 10K +-1% .125W TF TC=O+-100	19701	SFR25H
A6A11R65	0757-0442	9	1	RESISTOR 10K +-1% .125W TF TC=O+-100	19701	SFR25H
A6A11R66	2100-3353	8	1	RESISTOR-TRMR 20K 10% TKF SIDE-ADJ l-TRN	32997	3386X-Y46-203
A6A11R67	0683-3955	8	1	RESISTOR 3.9M 5% .25W CC TC=-900/+1100	01121	CB3955
A6A11R68	0757-0465	6	1	RESISTOR 100K +-1% .125W TF TC=O+-100	19701	SFR25H
A6A11R69	2100-3353	8	1	RESISTOR-TRMR 20K 10% TKF SIDE-ADJ I-TRN	32997	3386X-146-203
A6A11R70	0683-3955	8	1	RESISTOR 3.9M 5% .25W CC TC=-900/+1100	01121	C83955
A6A11R71	0757-0465	6	1	RESISTOR 100K +-1% .125W TF TC=O+-100	19701	SFR25H
A6A11R72	2100-3353	8	1	RESISTOR-TRMR 20K 10% TKF SIDE-ADJ l-TRN	32997	3386X-Y46-203
A6A11R73	0683-3955	8	1	RESISTOR 3.9M 5% .25W CC TC=-900/+1100	01121	CB3955
A6A11R74	0757-0465	6	1	RESISTOR 100K +-1% .125W TF TC=O+-100	19701	SFR25H
A6A11R75	2100-3353	8	1	RESISTOR-TRMR 20K 10% TKF SIDE-ADJ l-TRN	32997	3386X-Y46-203
A6A11R76	0683-3955	8	1	RESISTOR 3.9M 5% .25W CC TC=-900/+1100	01121	C83955
A6A11R77	0757-0465	6	1	RESISTOR 100K +-1% .125W TF TC=O+-100	19701	SFR25H
A6A11R78	2100-3353	8	1	RESISTOR-TRMR 20K 10% TKF SIDE-ADJ l-TRN	32997	3386X-Y46-203
A6A11R79	0683-3955	8	1	RESISTOR 3.9M 5% .25W CC TC=-900/+1100	01121	C83955
A6A11R80	0757-0465	6	1	RESISTOR 100K +-1% .125W TF TC=O+-100	19701	SFR25H
A6A11R81	0698-3136	8	1	RESISTOR 17.8K 1% .125W TF TC=O+-100	19701	SFR25H
A6A11R82	0698-3136	8	1	RESISTOR 17.8K 1% .125W TF TC=O+-100	19701	SFR25H
A6A11R83	0698-3159	5	1	RESISTOR 26.1K 1% .125W TF TC=O+-100	19701	SFR25H
A6A11R84	2100-3273	1	1	RESISTOR-TRMR 2K 10% TKF SIDE-ADJ l-TRN	32997	3386X-Y46-202
A6A11R85	0698-3156	2	1	RESISTOR 14.7K 1% .125W TF TC=O+-100	19701	SFR25H
A6A11R86	0757-0280	3	1	RESISTOR 1K +-1% .125W TF TC=O+-100	19701	SFR25H
A6A11R88	0698-3156	2	1	RESISTOR 14.7K 1% .125W TF TC=O+-100	19701	SFR25H
A6A11R89	0757-0442	9	1	RESISTOR 10K +-1% .125W TF TC=O+-100	19701	SFR25H
A6A11R90	0757-0438	3	1	RESISTOR 5.11K +-1% .125W TF TC=O+-100	19701	SFR25H
A6A11R91	0757-0416	7	1	RESISTOR 511 +-1% .125W TF TC=O+-100	19701	SFR25H
A6A11R92	0757-0290	5	1	RESISTOR 6.19K +-1% .125W TF TC=O+-100	19701	SFR25H
A6A11R93	0757-0280	3	1	RESISTOR 1K +-1% .125W TF TC=O+-100	19701	SFR25H
A6A11R94	0757-0280	3	1	RESISTOR 1K +-1% .125W TF TC=O+-100	19701	SFR25H
A6A11R95	0757-0280	3	1	RESISTOR 1K +-1% .125W TF TC=O+-100	19701	SFR25H
A6A11R96	0757-0280	3	1	RESISTOR 1K +-1% .125W TF TC=O+-100	19701	SFR25H
A6A11R97	0698-3260	9	1	RESISTOR 464K 1% .125W TF TC=O+-100	19701	SFR25H
A6A11R98	0698-3157	3	1	RESISTOR 19.6K 1% .125W TF TC=O+-100	19701	SFR25H
A6A11R99	0698-3157	3	1	RESISTOR 19.6K 1% .125W TF TC=O+-100	19701	SFR25H
A6A11R100	0698-3157	3	1	RESISTOR 19.6K 1% .125W TF TC=O+-100	19701	SFR25H
A6A11R101	0698-3157	3	1	RESISTOR 19.6K 1% .125W TF TC=O+-100	19701	SFR25H
A6A11R102	0757-0199	3	1	RESISTOR 21.5K +-1% .125W TF TC=O+-100	19701	SFR25H
A6A11R103	0757-0463	4	1	RESISTOR 82.5K +-1% .125W TF TC=O+-100	19701	SFR25H

**Indicates factoy-selected value*

HP Part Number 85660-60238

A6A11 Slope Generator

Reference Designation	HP Part Number	C. D	Qty	Description	Mfr Code	Mfr Part Number
A6A11R104	0757-0438	3	1	RESISTOR 5.11K +-1% .125W TF TC=O+-100	19701	SFR25H
A6A11R105	0757-0438	3	1	RESISTOR 5.11K +-1% .125W TF TC=O+-100	19701	SFR25H
A6A11R106	0757-0200	7	1	RESISTOR 5.62K +-1% .125W TF TC=O+-100	19701	SFR25H
A6A11R107	0757-0346	2	1	RESISTOR 10 +-1% .125W TF TC=O+-100	91637	CMF-55-1, T-l
A6A11R108	0757-0346	2	1	RESISTOR 10 +-1% .125W TF TC=O+-100	91637	CMF-55-1, T-l
A6A11R109	)757-0346	2	1	RESISTOR 10 +-1% .125W TF TC=O+-100	91637	CMF-55-1, T-l
A6A11R110	)757-0346	2	1	RESISTOR 10 +-1% .125W TF TC=O+-100	91637	CMF-55-1, T-l
A6A11R111	3757-0465	6	1	RESISTOR 100K +-1% .125W TF TC=O+-100	19701	SFR25H
A6A11R113	3757-0280	3	1	RESISTOR 1K +-1% .125W TF TC=O+-100	19701	SFR25H
A6A11R114	)757-0442	9	1	RESISTOR 10K +-1% .125W TF TC=O+-100	19701	SFR25H
A6A11R115	1757-0442	9	1	RESISTOR 10K +-1% .125W TF TC=O+-100	19701	SFR25H
A6A11R116	)757-0442	9	1	RESISTOR 10K +-1% .125W TF TC=O+-100	19701	SFR25H
A6A11R117	)757-0442	9	1	RESISTOR 10K +-1% .125W TF TC=O+-100	19701	SFR25H
A6A11R118	)757-0442	9	1	RESISTOR 10K +-1% .125W TF TC=O+-100	19701	SFR25H
A6A11R119	1757-0442	9	1	RESISTOR 10K +-1% .125W TF TC=O+-100	19701	SFR25H
A6A11R120	)757-0442	9	1	RESISTOR 10K +-1% .125W TF TC=O+-100	19701	SFR25H
A6A11TP1	1251-0600	0	1	CONNECTOR-SGL CONT PIN 1.14-MM-BSC-SZ SQ	27264	16-06-0034
A6A11TP2	1251-0600	0	1	CONNECTOR-SGL CONT PIN 1.14-MM-BSC-SZ SQ	27264	16-06-0034
A6A11TP3	1251-0600	0	1	CONNECTOR-SGL CONT PIN 1.14-MM-BSC-SZ SQ	27264	16-06-0034
A6A11TP4	1251-0600	0	1	CONNECTOR-SGL CONT PIN 1.14-MM-BSC-SZ SQ	27264	16-06-0034
A6A11TP5	.251-0600	0	1	CONNECTOR-SGL CONT PIN 1.14-MM-BSC-SZ SQ	27264	16-06-0034
A6A11TP6	.251-0600	0	1	CONNECTOR-SGL CONT PIN 1.14-MM-BSC-SZ SQ	27264	16-06-0034
A6A11TP7	.251-0600	0	1	CONNECTOR-SGL CONT PIN 1.14-MM-BSC-SZ SQ	27264	16-06-0034
A6A11TP8	.251-0600	0	1	CONNECTOR-SGL CONT PIN 1.14-MM-BSC-SZ SQ	27264	16-06-0034
A6A11U1	.826-1058	3	1	IC OP AMP GP 8-TO-99 PKG	06665	OP-02CJ
A6A11U2	5081-8117	3	1	SCREENED 1826-0092	28480	5081-8117
A6A11U3	820-1281	2	1	IC OCDR TTL LS 2-TO-4-LINE DUAL	01295	SN74LS139AN
A6A11U4	5081-8117	3	1	SCREENED 1826-0092	28480	5081-8117
A6A11U5	826-0161	7	1	IC OP AMP GP QUAD 14-DIP-P PKG	27014	LM324N
A6A11U6	5081-8117	3	1	SCREENED 1826-0092	28480	5081-8117
A6A11U7	826-1058	3	1	IC OP AMP GP 8-TO-99 PKG	06665	OP-02CJ
A6A11U8	820-1195	7	1	IC FF TTL LS D-TYPE POS-EDGE-TRIG COM CL	01295	SN74LS175N
A6A11U9	820-1196	3	1	IC FF TTL LS D-TYPE POS-EDGE-TRIG COM CL	01295	SN74LS174N
A6A11U10	820-1730	5	1	IC FF TTL LS D-TYPE POS-EDGE-TRIG COM CL	01295	SN74LS273N
A6A11U11	826-0188	3	1	D/A 8-BIT 16-CERDIP BPLR	04713	MC1408L-8
A6A11VR1	902-0625	)	1	DIODE-ZNR 1N829 6.2V 5% DO-35 PD=.25W	04713	1N829
A6A11VR2	902-0041	1	1	IIODE-ZNR 5.11V 5% DO-35 PD=.4W	04713	
A6A11VR3	902-3203	5	1	DIODE-ZNR 14.7V 5% DO-35 PD=.4W	04713	
A6A11VR4	902-0025	1	1	IIODE-ZNR 10V 5% DO-35 PD=.4W TC=+.06%	04713	

Indicates factory-selected value

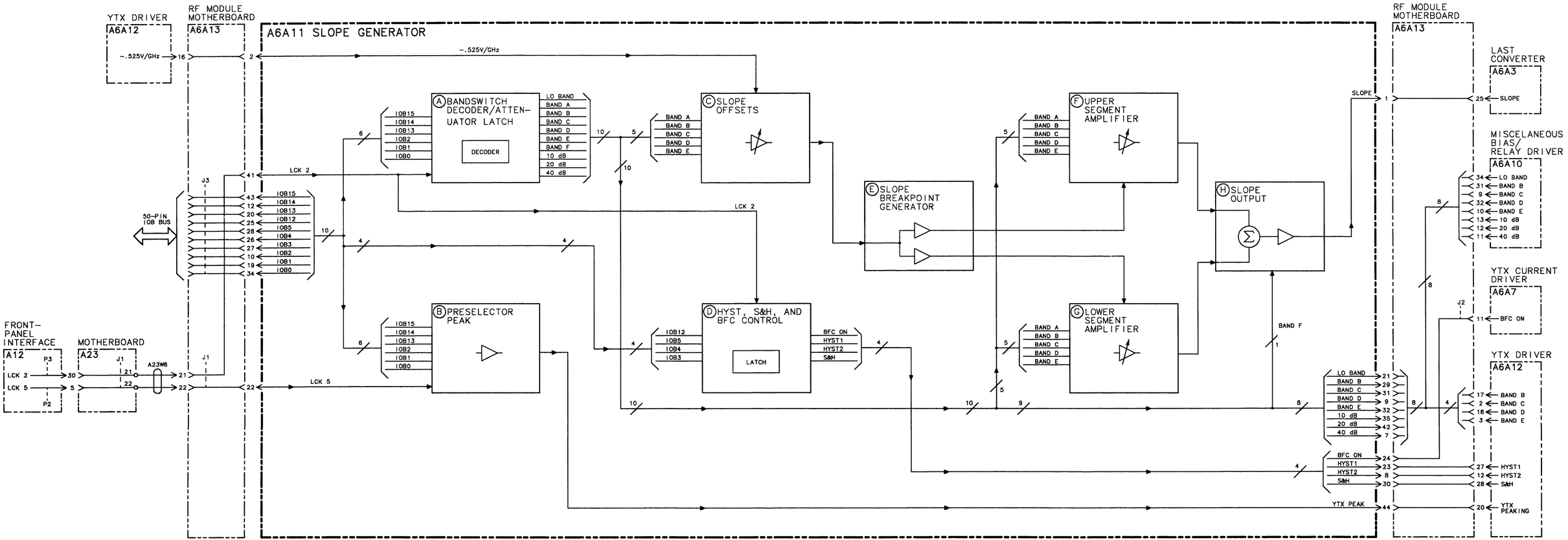

A6A11 SLOPE GENERATOR, BLOCK DIAGRAM

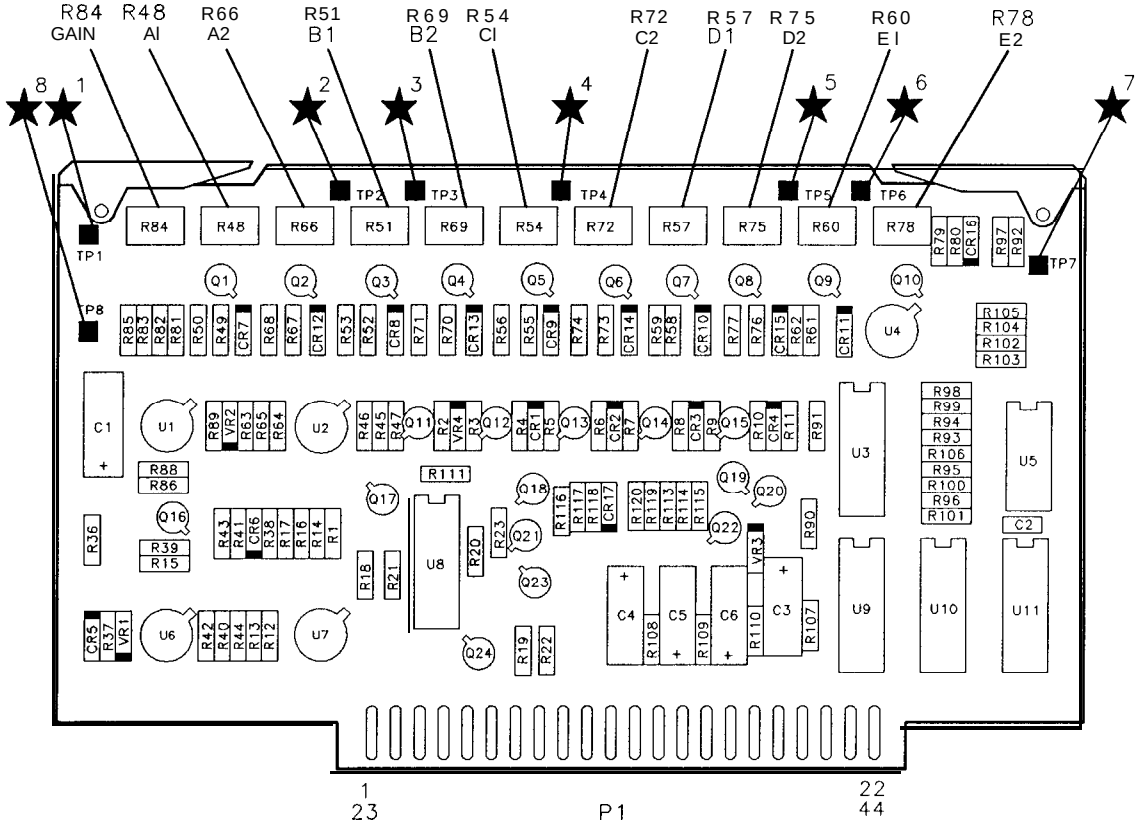

A6A11 Slope Generator Component Locations, 85660-60126, 85660-60238

A6A11 SLOPE GENERATOR
85660-60126
(SERIAL PREFIXES: 2410A-2611A)

P1

PIN	SIGNAL	TO/FROM	FUNCTION BLOCK
1	SLOPE	A6A3P1-25	H
23	HYST1	A6A12P1-27	D
2	-.525V/GHZ	A6A12P1-16	C
24	BFC ON	A6A7J2-11	D
3	NC		
25	10B12	IOC BUS	D
4	NC		
26	10B4	IOC BUS	D
5	NC		
27	10B3	IOC BUS	D
6	NC		
28	10B5	IOC BUS	D
7	40 DB	A6A10P1-11	
29	BAND B	A6A12P1-17	A
		A6A10P1-31	
8	HYST2	A6A12P1-12	D
30	S AND H	A6A12P1-28	
9	BAND D	A6A12P1-18	
	BAND C	A6A10P1-32	A
31		A6A12P1-2	
		A6A10P1-9	
10	10B2	IOC BUS	
32	BAND E	A6A12P1-3	A
		A6A10P1-10	
11	-9V	A6A12P1-4	I
33	+9V	A6A12P1-19	
12	10B14	IOC BUS	
34	10B8	IOC BUS	A
13	NC		
35	10 DB	A6A10P1-13	A
14	+20V		
36	+20V		I
15	-10V		
37	-10V		I
16	GND		
38	GND		I
17	+40V		
39	+40V		I
18	+5.2V		
40	+5.2V		I
19	10B1	IOC BUS	
41	LCK2	A12P3-30	A
20	10B13	IOC BUS	
42	20 DB	A6A10P1-12	A
21	LO BAND	A6A10P1-34	
43	10B15	IOC BUS	A
22	LCK5	A12P2-5	
44	YTX PEAKING	A6A12P1-20	B

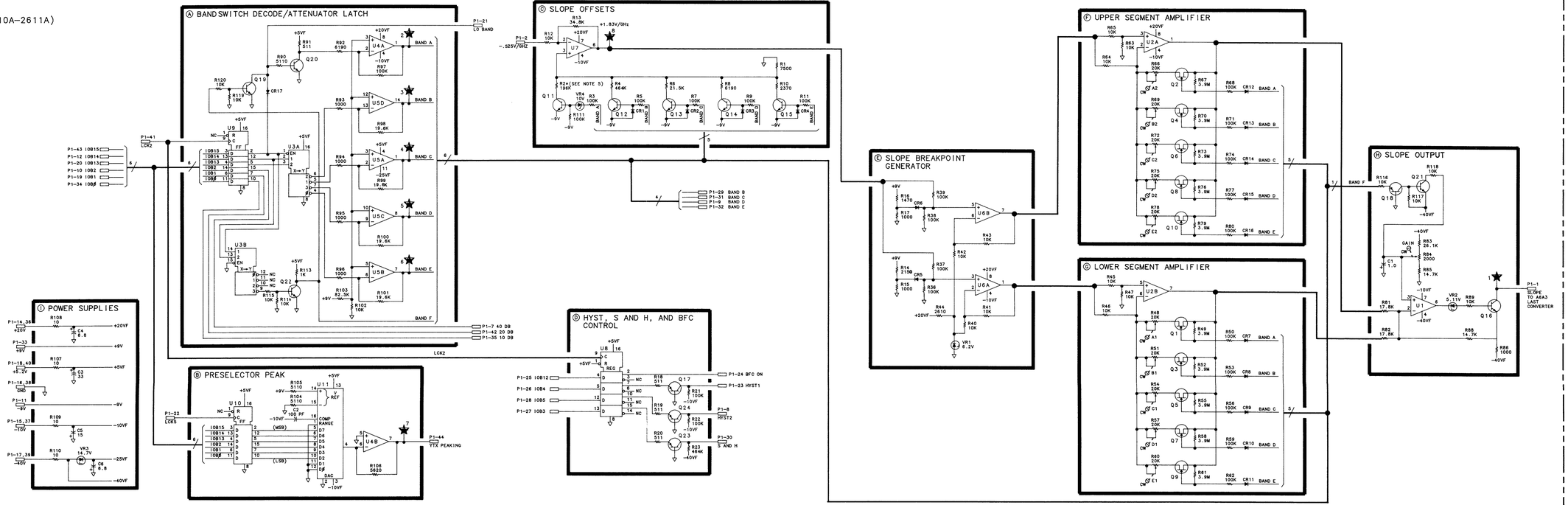

NOTES:

1. REFERENCE DESIGNATORS WITHIN THIS ASSEMBLY ARE ABBREVIATED. FOR COMPLETE REFERENCE DESIGNATION,PREFIX ABBREVIATION WITH ASSEMBLY DESIGNATION.
2. UNLESS OTHERWISE INDICATED: RESISTANCE IS IN OHMS (Ω) CAPACITANCE IS IN MICROFARADS(UF) INDUCTANCE IS IN MICROHENRIES(UH)
3. UNLESS OTHERWISE INDICATED: SIGNALS ENTER AT LEFT SIDE AND EXIT AT RIGHT SIDE OF FUNCTION BLOCKS.
4. MNEMONIC TABLE:

MNEMONIC	DESCRIPTION
BFC ON	FILTER CAPACITOR ENABLE
10B7-15	INSTRUMENT BUS DATA BITS 7 THRU 15
LCK2	LOW-CLOCK2
LCK5	LOW-CLOCK5
L1DA15	INSTRUCTION, DATA AND ADDRESS BUS BIT 15

5. R2* IS A FACTORY-SELECTED COMPONENT. ACCEPTABLE VALUES RANGE FROM 100K Ω TO 196K Ω.

A6A11

A6A11 SLOPE GENERATOR, SCHEMATIC DIAGRAM

A6A11 SLOPE GENERATOR
85660-60238
(SERIAL PREFIX: 2613A)

P1

PIN	SIGNAL	TO/FROM	FUNCTION BLOCK	
1	SLOPE	A6A3P1-25	H	
23	HYST1	A6A12P1-27	D	
2	-.525V/GHZ	A6A12P1-16	C	
24	BFC ON	A6A7J2-11	D	
3	NC			
25	10B12	IOC BUS	D	
4	NC			
26	10B4	IOC BUS	B	D
5	NC			
27	10B3	IOC BUS	B	D
6	NC			
28	10B5	IOC BUS	D	
7	40 DB	A6A10P1-11 A6A12P1-17 A6A10P1-31	A	
29	BAND			
8	HYST2	A6A12P1-12	D	
30	S AND H	A6A12P1-28		
9	BAND D	A6A12P1-18 A6A10P1-32 A6A12P1-2 A6A10P1-8	A	
31	BAND C			
10	10B2	IOC BUS A6A12P1-3 A6A10P1-10	A	
32	BAND E			
11	-9V	A6A12P1-4	I	
33	+9V	A6A12P1-19		
12	10B14	IOC BUS	A	
34	10B8	IOC BUS		
13	NC			
35	10 DB	A6A10P1-13	A	
14	+20V		I	
36	+20V			
15	-10V		I	
37	-10V			
16	GND		I	
38	GND			
17	-40V		I	
39	-40V			
18	+5.2V		I	
40	+5.2V			
19	10B1	IOC BUS	A	
41	LOK2	A12P3-30		
20	10B13	IOC BUS	A	
42	20 DB	A6A10P1-12		
21	LO BAND	A6A10P1-34	A	
43	10B15	IOC BUS		
22	LCK5	A12P2-5	B	
44	YTX PEAKING	A6A12P1-20		

Ⓐ BANDSWITCH DECODE/ATTENUATOR LATCH

Ⓑ PRESELECTOR PEAK

Ⓒ SLOPE OFFSETS

Ⓓ HYST, S AND H, AND BFC CONTROL

Ⓔ SLOPE BREAKPOINT GENERATOR

Ⓕ UPPER SEGMENT AMPLIFIER

Ⓖ LOWER SEGMENT AMPLIFIER

Ⓗ SLOPE OUTPUT

Ⓘ POWER SUPPLIES

NOTES:

1. REFERENCE DESIGNATORS WITHIN THIS ASSEMBLY ARE ABBREVIATED. FOR COMPLETE REFERENCE DESIGNATORS, PREFIX ABBREVIATION WITH ASSEMBLY DESIGNATION.
2. UNLESS OTHERWISE INDICATED: RESISTANCE IS IN OHMS (Ω) CAPACITANCE IS IN MICROFARADS(μF) INDUCTANCE IS IN MICROHENRIES(μH)
3. UNLESS OTHERWISE INDICATED: SIGNALS ENTER AT LEFT SIDE AND EXIT AT RIGHT SIDE OF FUNCTION BLOCKS.
4. MNEMONIC TABLE

MNEMONIC	DESCRIPTION
BFC ON	FILTER CAPACITOR ENABLE
10B#-15	INSTRUMENT BUS DATA BITS # THRU 15
LCK2	LOW-CLOCK2
LCK5	LOW-CLOCK5
LIDA15	INSTRUCTION, DATA AND ADDRESS BUS BIT 15

5. R2* IS A FACTORY-SELECTED COMPONENT. ACCEPTABLE VALUES RANGE FROM 100K Ω TO 196K Ω.
6. DEFAULT IS 8-BIT (0-63) RESOLUTION WITH J2 10B-5 NOT USED. CUT A12J2T/A12E8 JUMPER TO ENABLE 8-BIT (0.00-63.75) RESOLUTION.

A6A11

A6A11 SLOPE GENERATOR, SCHEMATIC DIAGRAM

A6A12

A6A12 YIG-Tuned Mixer (YTX) Driver, Circuit Description

The YTX Driver receives a voltage proportional to the instrument LO frequency and produces a signal to control current in the YTX coil.

Input Differential Amplifier Ⓐ

This input signal to the YTX Driver comes from the A19 DAC and is -3 V/GHz. For example, as the YTO Loop sweeps from 2 to 6 Ghz, this input signal sweeps from -6 to -18 V. It is buffered by differential amplifier U1A, and appears at TP1.

Bandswitch Ⓒ

The frequency that the YTX is tuned to must be made to follow the first, second, third, or fourth harmonic of the YTO frequency, depending on the frequency band in which the instrument is operating. This is done by attenuating the buffered input signal with a voltage divider as shown in Figure 1.

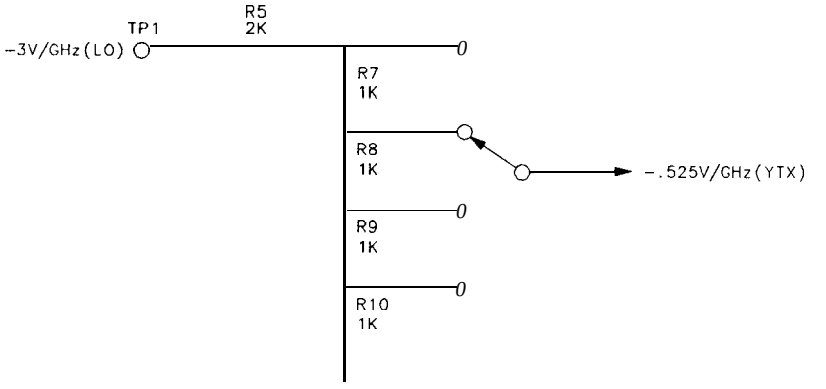

Figure 1. Bandwidth Voltage Divider

The position on the attenuator is determined by the harmonic number in use. The bandswitching is done with FET Q1, Q2, Q3, and Q12. The bandswitch information used to turn on the FETs comes from A6A11 Slope Generator. R6 and R11 to R14 form a second voltage divider used as a gate return through R15 to R18. This prevents current through bandswitch diodes and resistors (for example, R19 and CR1) when the associated FET is switched off from affecting the bandswitch voltage divider R5 and R7 to R10.

Sample and Hold Ⓔ

The output of the bandswitch drives preamp U5. U5 and U1B together form an op amp with U5 a low-noise, low-temperature drift preamplifier. U5, U1B, and U6 are used in a sample and hold circuit as shown in Figure 2.

Q15, a JFET, is used as the switch for the sample and hold. The switch is opened (that is, the FET is turned off) whenever a bandcrossing occurs. When a bandcrossing occurs, the input voltage at J1 changes as the YTO Loop resets its frequency to start a new band, and the YTX bandswitch changes bands. At this time, the voltage at the input of U5 varies. The sample and hold circuit is used to prevent these variations from reaching the YTX. The sample and hold switch is controlled through Q14 by a signal from the A6A11 Slope Generator. R44, R45, CR10, and CR11 keep the output of U1B from saturating when the feedback loop is opened by Q15 being off. This prevents a "glitch" at the output of U6 when the loop closes if U1B suddenly had to recover from a saturated condition.

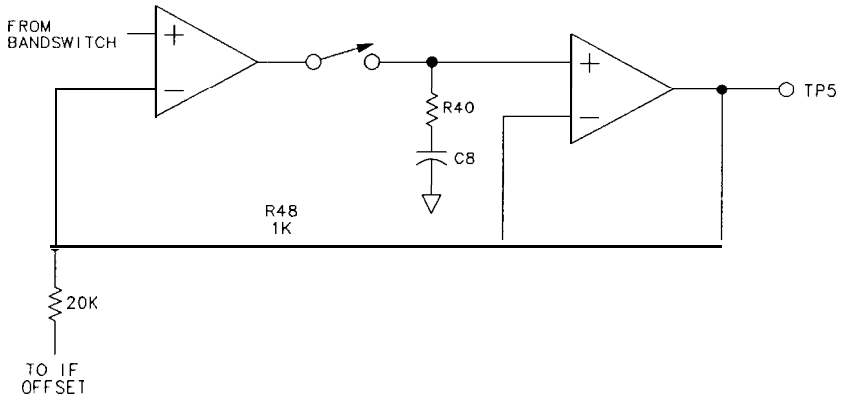

Figure 2. YTX Driver Sample and Hold, Simplified Schematic

IF Offsets Ⓕ

In addition to tracking a harmonic of the YTO, the YTX must be offset from this LO harmonic by the first IF (321.4 MHz). This is done by U7A and its associated components. Q7 to Q10 switch in different IF offset adjustments for each band. The YTX peaking signal from A6A11 Slope Generator is also summed into U7A through R77.

Sweep + Tune Ⓗ

Since the U5, U1B, and U6 combination have a gain of 1.05 set by R48 and R75, the voltage at TP5 has an sensitivity of -0.525 V/GHz (YTX). This signal goes to the A6A11 Slope Generator, to voltage divider R54 and R55, and to U8. U8 is set to give -1 V/GHz at its output which goes to J2. This signal is cabled to the rear panel of the instrument to provide an analog voltage proportional to input frequency. U2A and its associated circuitry provide an offset voltage for U8 to correct for the first IF (3.6214 GHz) in the 0 to 2.5 GHz band. R98 is adjusted for 0 V at U2 with the spectrum analyzer tuned to 0 Hz.

YTX Drive Output Ⓖ

Voltage divider R54 and R55 drive the output stage shown in Figure 3.

R_s and the output transistor are on A6A7 YTX Current Driver. The YTX has a nominal coil sensitivity of 75 MHz/mA. R63 and R66 provide the means for compensating for variations amount YTXs. When the YTX center frequency is tuned to 5.8 GHz, the voltage at pin 3 of U3 is +1.52 V. There is no voltage across R66 so it has no effect. R63 is adjusted for tracking at 5.8 GHz and R66 is adjusted at 2 Ghz. U4A and voltage divider R68 and R69 provide the +1.52 V source.

The YTX magnet exhibits hysteresis which must be corrected for. This is done by signals from the A6A11 Slope Generator which is controlled by the instrument controller. Q18 is turned on for a short period of time to correct for hysteresis in narrow spans (<1 GHz); Q18 and Q19 are both turned on for a short period of time in large spans and when making large downward steps in frequency. The length of time that the transistors are on and the length of time after they are off before the sweep starts is controlled by the instrument controller and varies with start frequency, span, previous stop frequency, and so on.

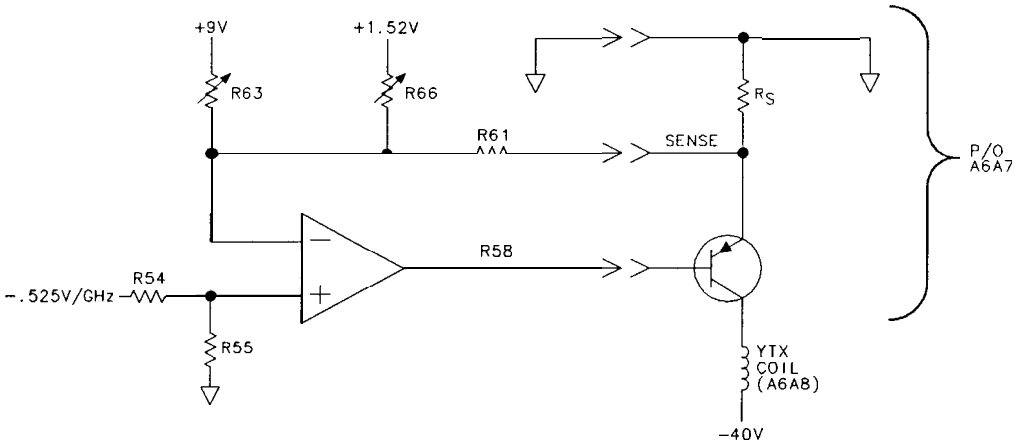

Figure 3. Output Amplifier, Simplified Schematic

Delay Compensation Ⓑ

The YTX and YTO (LO) are electromagnetically tuned devices. As such, they both exhibit a delay in their response to changes in magnet current. When a change in coil current occurs, there is a delay before the corresponding change in frequency occurs. When a ramp of current is applied to a YTX or YTO magnet coil, there is a time delay between the ramp current and the corresponding frequency. Since the YTX and YTO have different magnet structures, they exhibit different amounts of delay. This causes tracking problems. These problems are compounded by harmonic mixing and heating effects.

On the fourth harmonic, the YTO is sweeping 1/4 as much in frequency as the YTX. Thus the YTO exhibits its least delay with respect to the YTX. R24, R25, Cl, C2, C11, and C23 are used to "speed up" the YTX to track the YTO on fourth harmonic. On lower harmonics, the YTO exhibits more delay compared to the YTX since it must now sweep further. The YTX is then delayed to match the YTO under these conditions by R26 and C3.

Since these RC combinations have long time constants, they cannot readily respond to the transients produced at band crossings and scan resets. Therefore, whenever the sample and hold circuit is holding, R24 to R26 are shorted by Q4 to Q6 respectively.

+9 V and -9 V Reference Supplies Ⓓ

U2B and U7B and their associated circuitry form -9 V and +9 V reference supplies used in the YTX Driver, and elsewhere in the A6 RF Module.

HP Part Number 85660-60013

A6A12 YTX Driver

Reference Designation	HP Part Number	C. D	Qty	Description	Mfr Code	Mfr Part Number
A6A12	85660-60013	3	1	BD ASSEMBLY, YIG-TUNED MIXER (YTX) DRIVE (SERIAL PREFIXES: 2410A - 2449A)	28480	85660-60013
A6A12C1*	0180-2205	3	1	CAPACITOR-FXD .33UF+-10% 35VDC TA	56289	150D334X9035A2
A6A12C2*	0180-0218	4	1	CAPACITOR-FXD .15UF+-10% 35VDC TA	56289	150D684X9035A2
A6A12C4	0160-0571	0	1	CAPACITOR-FXD 470PF +-20% 100VDC CER	04222	SR201C471MAAH
A6A12C5	0160-0571	0	1	CAPACITOR-FXD 470PF +-20% 100VDC CER	04222	SR201C471MAAH
A6A12C6	0180-0197	8	1	CAPACITOR-FXD 2.2UF+-10% 20VDC TA	56289	150D225X9020A2
A6A12C7	0160-3097	1	1	CAPACITOR-FXD .47UF +80-20% 50VDC CER	04222	SR835E474ZAAH
A6A12C8	0160-3879	7	1	CAPACITOR-FXD .01UF +-20% 100VDC CER	04222	SR201C103MAAH
A6A12C9	0160-3097	1	1	CAPACITOR-FXD .47UF +80-20% 50VDC CER	04222	SR835E474ZAAH
A6A12C10	0180-0197	8	1	CAPACITOR-FXD 2.2UF+-10% 20VDC TA	56289	150D225X9020A2
A6A12C11*	0180-1735	2	1	CAPACITOR-FXD .22UF+-10% 35VDC TA	56289	150D224X9035A2
A6A12C12	0160-0571	0	1	CAPACITOR-FXD 470PF +-20% 100VDC CER	04222	SR201C471MAAH
A6A12C13	0160-0571	0	1	CAPACITOR-FXD 470PF +-20% 100VDC CER	04222	SR201C471MAAH
A6A12C14	0180-0197	8	1	CAPACITOR-FXD 2.2UF+-10% 20VDC TA	56289	150D225X9020A2
A6A12C15	0160-3097	1	1	CAPACITOR-FXD .47UF +80-20% 50VDC CER	04222	SR835E474ZAAH
A6A12C16	0160-4084	8	1	CAP-FXD 0.1UF 50 V	56289	1C20X7R104M050B
A6A12C17	0160-3097	1	1	CAPACITOR-FXD .47UF +80-20% 50VDC CER	04222	SR835E474ZAAH
A6A12C18	0180-0229	7	1	CAP-FXD 33UF 10 V TA	56289	150D336X9010B2
A6A12C19	0180-0116	1	1	CAPACITOR-FXD 6.8UF+-10% 35VDC TA	56289	150D685X9035B2
A6A12C20	0180-1746	5	1	CAPACITOR-FXD 15UF+-10% 20VDC TA	56289	150D156X9020B2
A6A12C21	0180-0116	1	1	CAPACITOR-FXD 6.8UF+-10% 35VDC TA	56289	1500685X903582
A6A12C22	0180-0229	7	1	CAP-FXD 33uF 10 V TA	56289	150D336X9010B2
A6A12C23*				SEE 85660-60013 SCHEMATIC DIAGRAM		
A6A12CR1	1901-1067	4	1	DIODE-SWITCHING 125V 175MA 60NS DO-35	27014	FDH444
A6A12CR2	1901-1067	4	1	DIODE-SWITCHING 125V 175MA 60NS DO-35	27014	FDH444
A6A12CR3	1901-1067	4	1	DIODE-SWITCHING 125V 175MA 60NS DO-35	27014	FDH444
A6A12CR4	1901-1067	4	1	DIODE-SWITCHING 125V 175MA 60NS DO-35	27014	FDH444
A6A12CR5	1901-1067	4	1	DIODE-SWITCHING 125V 175MA 60NS DO-35	27014	FDH444
A6A12CR6	1901-1067	4	1	DIODE-SWITCHING 125V 175MA 60NS DO-35	27014	FDH444
A6A12CR7	1901-1067	4	1	DIODE-SWITCHING 125V 175MA 60NS DO-35	27014	FDH444
A6A12CR8	1901-1067	4	1	DIODE-SWITCHING 125V 175MA 60NS DO-35	27014	FDH444
A6A12CR9	1901-1067	4	1	DIODE-SWITCHING 125V 175MA 60NS DO-35	27014	FDH444
A6A12CR10	1901-1067	4	1	DIODE-SWITCHING 125V 175MA 60NS DO-35	27014	FDH444
A6A12CR11	1901-1067	4	1	DIODE-SWITCHING 125V 175MA 60NS DO-35	27014	FDH444
A6A12CR12	1901-1067	4	1	DIODE-SWITCHING 125V 175MA 60NS DO-35	27014	FDH444
A6A12CR14	1901-1067	4	1	DIODE-SWITCHING 125V 175MA 60NS DO-35	27014	FDH444
A6A12CR15	1901-1067	4	1	DIODE-SWITCHING 125V 175MA 60NS DO-35	27014	FDH444
A6A12CR16	1901-1067	4	1	DIODE-SWITCHING 125V 175MA 60NS DO-35	27014	FDH444
A6A12CR17	1901-1067	4	1	DIODE-SWITCHING 125V 175MA 60NS DO-35	27014	FDH444
A6A12CR18	1901-1067	4	1	DIODE-SWITCHING 125V 175MA 60NS DO-35	27014	FDH444
A6A12J1	1250-0543	3	1	CONNECTOR-RF SM-SNP M PC 50-OHM	98291	51-053-0349-BE8
A6A12J2	1250-0543	3	1	CONNECTOR-RF SM-SNP M PC 50-OHM	98291	51-053-0349-BE8
A6A12MP2	1480-0173	5	2	PIN-ROLL .062-IN-DIA .25-IN-LG BE-CU	72962	99-012-062-0250
A6A12MP3	4040-0749	4	1	EXTR PC BD BRN	28480	4040-0749
A6A12MP4	4040-0750	7	1	EXTR PC BD RED	28480	4040-0750
A6A12Q1	1855-0414	4	1	TRANSISTOR J-FET 2N4393 N-CHAN D-MODE TO	17856	2N4393

**Indicates factory-selected value*

HP Part Number 85660-60013

A6A12 YTX Driver

Reference Designation	HP Part Number	C D	Qty	Description	Mfr Code	Mfr Part Number
A6A12Q2	1855-0414	4	1	TRANSISTOR J-FET 2N4393 N-CHAN D-MODE TO	17856	214393
A6A12Q3	1855-0414	4	1	TRANSISTOR J-FET 2N4393 N-CHAN D-MODE TO	17856	2N4393
A6A12Q4	1855-0420	2	1	TRANSISTOR J-FET 2N4391 N-CHAN D-MODE TO	17856	2N4391
A6A12Q5	1855-0420	2	1	TRANSISTOR J-FET 2N4391 N-CHAN D-MODE TO	17856	2N4391
A6A12Q6	1855-0420	2	1	TRANSISTOR J-FET 214391 N-CHAN D-MODE TO	17856	2N4391
A6A12Q7	1855-0414	4	1	TRANSISTOR J-FET 2N4393 N-CHAN D-MODE TO	17856	2N4393
A6A12Q8	1855-0414	4	1	TRANSISTOR J-FET 2N4393 N-CHAN D-MODE TO	17856	2N4393
A6A12Q9	1855-0414	4	1	TRANSISTOR J-FET 2N4393 N-CHAN D-MODE TO	17856	2N4393
A6A12Q10	1855-0414	4	1	TRANSISTOR J-FET 2N4393 N-CHAN D-MODE TO	17856	2N4393
A6A12Q11	1853-0281	9	1	TRANSISTOR PNP 2N2907A SI TO-18 PD=400MW	04713	2N2907A
A6A12Q12	1855-0414	4	1	TRANSISTOR J-FET 214393 N-CHAN D-MODE TO	17856	2N4393
A6A12Q13	1854-0557	4	1	TRANSISTOR NPN 2N2432A SI TO-18 PD=300MW	01295	2N2432A
A6A12Q14	1853-0007	7	1	TRANSISTOR PNP 2N3251 SI TO-18 PD=360MW	04713	2N3251
A6A12Q15	1855-0420	2	1	TRANSISTOR J-FET 2N4391 N-CHAN D-MODE TO	17856	2N4391
A6A12Q16	1854-0637	1	1	TRANSISTOR NPN 2N2219A SI TO-5 PD=800MW	04713	2N2219A
A6A12Q17	1853-0322	9	1	TRANSISTOR PNP 2N2946A SI TO-46 PD=400MW	04713	
A6A12Q18	1854-0477	7	1	TRANSISTOR NPN 2N2222A SI TO-18 PD=500MW	04713	2N2222A
A6A12Q19	1854-0477	7	1	TRANSISTOR NPN 2N2222A SI TO-18 PD=500MW	04713	2N2222A
A6A12R1	0698-8067	4	1	RESISTOR 5K +-0.01% .15W MF TC=O+-1.3	18612	301358
A6A12R2	0698-8067	4	1	RESISTOR 5K +-0.01% .15W MF TC=O+-1.3	18612	301358
A6A12R3	0698-8067	4	1	RESISTOR 5K +-0.01% .15W MF TC=O+-1.3	18612	301358
A6A12R4	0698-8067	4	1	RESISTOR 5K +-0.01% .15W MF TC=O+-1.3	18612	301358
A6A12R5	0699-0153	5	1	RESISTOR 2K +-0.1% .225W MF TC=O+-1.3	18612	301358
A6A12R6	0698-3153	9	1	RESISTOR 3.83K 1% .125W TF TC=O+-100	19701	SFR25H
A6A12R7	0698-8625	0	1	RESISTOR 1K +-0.1% .1W TF TC=O+-5	19701	50232
A6A12R8	0698-8625	0	1	RESISTOR 1K +-0.1% .1W TF TC=O+-5	19701	50232
A6A12R9	0698-8625	0	1	RESISTOR 1K +-0.1% .1W TF TC=O+-5	19701	50232
A6A12R10	0698-8625	0	1	RESISTOR 1K +-0.1% .1W TF TC=O+-5	19701	50232
A6A12R11	0698-0083	8	1	RESISTOR 1.96K 1% .125W TF TC=O+-100	19701	SFR25H
A6A12R12	0698-0083	8	1	RESISTOR 1.96K 1% .125W TF TC=O+-100	19701	SFR25H
A6A12R13	0698-0083	8	1	RESISTOR 1.96K 1% .125W TF TC=O+-100	19701	SFR25H
A6A12R14	0698-0083	8	1	RESISTOR 1.96K 1% .125W TF TC=O+-100	19701	SFR25H
A6A12R15	0698-3453	2	1	RESISTOR 196K 1% .125W TF TC=O+-100	19701	SFR25H
A6A12R16	0698-3453	2	1	RESISTOR 196K 1% .125W TF TC=O+-100	19701	SFR25H
A6A12R17	0698-3453	2	1	RESISTOR 196K 1% .125W TF TC=O+-100	19701	SFR25H
A6A12R18	0698-3453	2	1	RESISTOR 196K 1% .125W TF TC=O+-100	19701	SFR25H
A6A12R19	0757-0280	3	1	RESISTOR 1K +-1% .125W TF TC=O+-100	19701	SFR25H
A6A12R20	0757-0280	3	1	RESISTOR 1K +-1% .125W TF TC=O+-100	19701	SFR25H
A6A12R21	0757-0280	3	1	RESISTOR 1K +-1% .125W TF TC=O+-100	19701	SFR25H
A6A12R22	0757-0280	3	1	RESISTOR 1K +-1% .125W TF TC=O+-100	19701	SFR25H
A6A12R23	0757-0442	9	1	RESISTOR 10K +-1% .125W TF TC=O+-100	19701	SFR25H
A6A12R24	2100-3353	8	1	RESISTOR-TRMR 20K 10% TKF SIDE-ADJ 1-TRN	32997	3386X-Y46-203
A6A12R25	2100-3353	8	1	RESISTOR-TRMR 20K 10% TKF SIDE-ADJ 1-TRN	32997	3386X-Y46-203
A6A12R26	2100-3357	2	1	RESISTOR-TRMR 500K 10% TKF SIDE-ADJ 1-TR	32997	3386X-146-504
A6A12R27	0698-3453	2	1	RESISTOR 196K 1% .125W TF TC=O+-100	19701	SFR25H
A6A12R28	0698-3453	2	1	RESISTOR 196K 1% .125W TF TC=O+-100	19701	SFR25H
A6A12R29	0698-3453	2	1	RESISTOR 196K 1% .125W TF TC=O+-100	19701	SFR25H
A6A12R30	0757-0280	3	1	RESISTOR 1K +-1% .125W TF TC=O+-100	19701	SFR25H

Indicates factory-selected value

HP Part Number 85660-60013

A6A12 YTX Driver

Reference Designation	HP Part Number	C D	Qty	Description	Mfr Code	Mfr Part Number
A6A12R31	0757-0280	3	1	RESISTOR 1K +-1% .125W TF TC=O+-100	19701	SFR25H
A6A12R32	0757-0280	3	1	RESISTOR 1K +-1% .125W TF TC=O+-100	19701	SFR25H
A6A12R33	0757-0442	9	1	RESISTOR 10K +-1% .125W TF TC=O+-100	19701	SFR25H
A6A12R34	0757-0465	6	1	RESISTOR 100K 1% .125W F TC=O+-100	24546	C4-1/8-TO-1002-F
A6A12R35	0757-0442	9	1	RESISTOR 10K 1% .125W F TC=O+-100	24546	C4-1/8/TO-1002-F
A6A12R36	0698-3157	3	1	RESISTOR 19.6K 1% .125W TF TC=O+-100	19701	SFR25H
A6A12R37	0698-3157	3	1	RESISTOR 19.6K 1% .125W TF TC=O+-100	19701	SFR25H
A6A12R38	0698-4037	0	1	RESISTOR 46.4 1% .125W TF TC=O+-100	19701	SFR25H
A6A12R39	0698-4037	0	1	RESISTOR 46.4 1% .125W TF TC=O+-100	19701	SFR25H
A6A12R40	0757-0401	0	1	RESISTOR 100 +-1% .125W TF TC=O+-100	19701	SFR25H
A6A12R41	0698-4037	0	1	RESISTOR 46.4 1% .125W TF TC=O+-100	19701	SFR25H
A6A12R42	0698-4037	0	1	RESISTOR 46.4 1% .125W TF TC=O+-100	19701	SFR25H
A6A12R43	0698-8827	4	1	RESISTOR 1M +-1% .125W TF TC=O+-100	19701	SFR25H
A6A12R44	0698-0083	8	1	RESISTOR 1.96K 1% .125W TF TC=O+-100	19701	SFR25H
A6A12R45	0757-0401	0	1	RESISTOR 100 +-1% .125W TF TC=O+-100	19701	SFR25H
A6A12R46	0757-0465	6	1	RESISTOR 100K +-1% .125W TF TC=O+-100	19701	SFR25H
A6A12R47	0757-0442	9	1	RESISTOR 10K 1% .125W F TC=O+-100	24546	C4-1/8-TO/1002-F
A6A12R48	0698-8625	0	1	RESISTOR 1K +-0.1% .1W TF TC=O+-5	19701	50232
A6A12R49	0757-0442	9	1	RESISTOR 10K +-1% .125W TF TC=O+-100	19701	SFR25H
A6A12R50	0757-0465	6	1	RESISTOR 100K +-1% .125W TF TC=O+-100	19701	SFR25H
A6A12R51	0757-0280	3	1	RESISTOR 1K +-1% .125W TF TC=O+-100	19701	SFR25H
A6A12R52	0757-0442	9	1	RESISTOR 10K +-1% .125W TF TC=O+-100	19701	SFR25H
A6A12R54	0698-7479	0	1	RESISTOR 10K +-0.1% .225W MF TC=O+-1.5	18612	301359
A6A12R55	0698-7479	0	1	RESISTOR 10K +-0.1% .225W MF TC=O+-1.5	18612	301359
A6A12R56	0698-3157	3	1	RESISTOR 19.6K 1% .125W TF TC=O+-100	19701	SFR25H
A6A12R57	0698-3157	3	1	RESISTOR 19.6K 1% .125W TF TC=O+-100	19701	SFR25H
A6A12R58	0698-0082	7	1	RESISTOR 464 1% .125W TF TC=O+-100	19701	SFR25H
A6A12R59	0698-4037	0	1	RESISTOR 46.4 1% .125W TF TC=O+-100	19701	SFR25H
A6A12R60	0698-4037	0	1	RESISTOR 46.4 1% .125W TF TC=O+-100	19701	SFR25H
A6A12R61	0698-8625	0	1	RESISTOR 1K +-0.1% .1W TF TC=O+-5	19701	50232
A6A12R62	0698-8827	4	1	RESISTOR 1M +-1% .125W TF TC=O+-100	19701	SFR25H
A6A12R63	2100-4052	6	1	RESISTOR-TRMR 20K 5% MF SIDE-ADJ 25-TRN	28480	2100-4052
A6A12R64	0698-7479	0	1	RESISTOR 10K .1% .225W F TC=O+-1	28480	0698-7479
A6A12R65	0698-8485	0	1	RESISTOR 6.69K +-0.1% .1W TF TC=O+4	19701	50232
A6A12R66	2100-4052	6	1	RESISTOR-TRMR 20K 5% MF SIDE-ADJ 25-TRN	28480	2100-4052
A6A12R67	0698-8625	0	1	RESISTOR 1K +-0.1% .1W TF TC=O+-5	19701	50232
A6A12R68	0698-8485	0	1	RESISTOR 6.69K +-0.1% .1W TF TC=O+4	19701	50232
A6A12R69	0698-6407	2	1	RESISTOR 32.8K +-0.1% .1W TF TC=O+4	19701	50232
A6A12R70	0698-3158	4	1	RESISTOR 23.7K 1% .125W TF TC=O+-100	19701	SFR25H
A6A12R71	0757-0442	9	1	RESISTOR 10K +-1% .125W TF TC=O+-100	19701	SFR25H
A6A12R72	0757-0442	9	1	RESISTOR 10K +-1% .125W TF TC=O+-100	19701	SFR25H
A6A12R73	0698-3151	7	1	RESISTOR 2.87K 1% .125W TF TC=O+-100	19701	SFR25H
A6A12R74	0757-0442	9	1	RESISTOR 10K +-1% .125W TF TC=O+-100	19701	SFR25H
A6A12R75	0698-8161	9	1	RESISTOR 20K +-1% .1W TF TC=O+-5	19701	50232
A6A12R76	0757-0442	9	1	RESISTOR 10K +-1% .125W TF TC=O+-100	19701	SFR25H
A6A12R77	0757-0465	6	1	RESISTOR 100K +-1% .125W TF TC=O+-100	19701	SFR25H
A6A12R78	0698-3161	9	1	RESISTOR 38.3K 1% .125W TF TC=O+-100	19701	SFR25H

**Indicates factory-selected value*

HP Part Number 85660-60013

A6A12 YTX Driver

Reference Designation	HP Part Number	CD	Qty	Description	Mfr Code	Mfr Part Number
A6A12R79	1698-3161	9	1	RESISTOR 38.3K 1% .125W TF TC=O+-100	19701	SFR25H
A6A12R80	1698-3161	9	1	RESISTOR 38.3K 1% .125W TF TC=O+-100	19701	SFR25H
A6A12R81	1698-3161	9	1	RESISTOR 38.3K 1% .125W TF TC=O+-100	19701	SFR25H
A6A12R82	!100-1661	7	1	RESISTOR-TRMR 20K 5% WW SIDE-ADJ 22-TRN	32997	3057P-DM3-203
A6A12R83	1100-1661	7	1	RESISTOR-TRMR 20K 5% WW SIDE-ADJ 22-TRN	32997	3057P-DM3-203
A6A12R84	'100-1661	7	1	RESISTOR-TRMR 20K 5% WW SIDE-ADJ 22-TRN	32997	3057P-DM3-203
A6A12R85	'100-1661	7	1	RESISTOR-TRMR 20K 5% WW SIDE-ADJ 22-TRN	32997	3057P-DM3-203
A6A12R86	1698-3453	2	1	RESISTOR 196K 1% .125W TF TC=O+-100	19701	SFR25H
A6A12R87	1698-3453	2	1	RESISTOR 196K 1% .125W TF TC=O+-100	19701	SFR25H
A6A12R88	1698-3453	2	1	RESISTOR 196K 1% .125W TF TC=O+-100	19701	SFR25H
A6A12R89	1698-3453	2	1	RESISTOR 196K 1% .125W TF TC=O+-100	19701	SFR25H
A6A12R90	1757-0280	3	1	RESISTOR 1K +-1% .125W TF TC=O+-100	19701	SFR25H
A6A12R91	1757-0280	3	1	RESISTOR 1K +-1% .125W TF TC=O+-100	19701	SFR25H
A6A12R92	1757-0280	3	1	RESISTOR 1K +-1% .125W TF TC=O+-100	19701	SFR25H
A6A12R93	1757-0280	3	1	RESISTOR 1K +-1% .125W TF TC=O+-100	19701	SFR25H
A6A12R94	1757-0465	6	1	RESISTOR 100K +-1% .125W TF TC=O+-100	19701	SFR25H
A6A12R95	1757-0401	0	1	RESISTOR 100 +-1% .125W TF TC=O+-100	19701	SFR25H
A6A12R96	698-3156	2	1	RESISTOR 14.7K 1% .125W TF TC=O+-100	19701	SFR25H
A6A12R97	757-0444	1	1	RESISTOR 12.1K +-1% .125W TF TC=O+-100	19701	SFR25H
A6A12R98	100-3390	3	1	RESISTOR-TRMR 1K 10% TF SIDE-ADJ 25-TRN	18612	1202-Y-1K
A6A12R99	757-0442	9	1	RESISTOR 10K +-1% .125W TF TC=O+-100	19701	SFR25H
A6A12R100	757-0442	9	1	RESISTOR 10K +-1% .125W TF TC=O+-100	19701	SFR25H
A6A12R101	757-0458	7	1	RESISTOR 51.1K +-1% .125W TF TC=O+-100	19701	SFR25H
A6A12R102	757-0289	2	1	RESISTOR 13.3K +-1% .125W TF TC=O+-100	19701	SFR25H
A6A12R103	757-0346	2	1	RESISTOR 10 +-1% .125W TF TC=O+-100	91637	CMF-55-1. T-l
A6A12R104	757-0346	2	1	RESISTOR 10 +-1% .125W TF TC=O+-100	91637	CMF-55-1, T-l
A6A12R105	757-0346	2	1	RESISTOR 10 +-1% .125W TF TC=O+-100	91637	CMF-55-1, T-l
A6A12R106	757-0346	2	1	RESISTOR 10 +-1% .125W TF TC=O+-100	91637	CMF-55-1. T-l
A6A12R107	757-0416	7	1	RESISTOR 511 1% .125W F TC=O+-100	24546	C4-1/8-TO-511R-F
A6A12R108	698-0083	8	1	RESISTOR 1.96K 1% .125W TF TC=O+-100	19701	SFR25H
A6A12R109	698-7479	0	1	RESISTOR 10K +-0.1% .225W MF TC=O+-1.5	18612	301359
A6A12R110	757-0401	0	1	RESISTOR 100 +-1% .125W TF TC=O+-100	19701	SFR25H
A6A12R111	757-0438	3	1	RESISTOR 5.11K +-1% .125W TF TC=O+-100	19701	SFR25H
A6A12R112	698-8485	0	1	RESISTOR 6.69K .1% .1W F TC=O+4	28480	0698-8485
A6A12R113	100-4052	6	1	RESISTOR-TRMR 20K 5% MF SIDE-ADJ 25-TRN	28480	2100-4052
A6A12R114	698-8067	4	1	RESISTOR 5K +-0.01% .15W MF TC=O+-1.3	18612	301358
A6A12R115	698-8067	4	1	RESISTOR 5K +-0.01% .15W MF TC=O+-1.3	18612	301358
A6A12R116	757-0401	3	1	RESISTOR 100 +-1% .125W TF TC=O+-100	19701	SFR25H
A6A12R117	757-0438	3	1	RESISTOR 5.11K +-1% .125W TF TC=O+-100	19701	SFR25H
A6A12R118	757-0442	3	1	RESISTOR 10K +-1% .125W TF TC=O+-100	19701	SFR25H
A6A12TP1	251-0600	3	1	CONNECTOR-SGL CONT PIN 1.14-MM-BSC-SZ SQ	27264	16-06-0034
A6A12TP2	251-0600	3	1	"DNNECTOR-SGL CONT PIN 1.14-MM-BSC-SZ SQ	27264	16-06-0034
A6A12TP3	251-0600	3	1	CONNECTOR-SGL CONT PIN 1.14-MM-BSC-SZ SQ	27264	16-06-0034
A6A12TP4	251-0600	3	1	CONNECTOR-SGL CONT PIN 1.14-MM-BSC-SZ SQ	27264	16-06-0034
A6A12TP5	251-0600	3	1	CONNECTOR-SGL CONT PIN 1.14-MM-BSC-SZ SQ	27264	16-06-0034
A6A12TP6	251-0600	3	1	CONNECTOR-SGL CONT PIN 1.14-MM-BSC-SZ SQ	27264	16-06-0034
A6A12U1	081-8117	3	1	SCREEN 1826-0092	28480	5081-8117
A6A12U2	081-8117	3	1	SCREEN 1826-0092	28480	5081-8117

**Indicates factory-selected value*

HP Part Number 85660-60013

A6A12 YTX Driver

Reference Designation	HP Part Number	C D	Qty	Description	Mfr Code	Mfr Part Number
A6A12U3	.826-0162	8	1	IC PREAMPLIFIER TO-99 PKG	27014	LM321H
A6A12U4	5081-8117	3	1	SCREEN 1826-0092	28480	5081-8117
A6A12U5	1826-0162	8	1	IC PREAMPLIFIER TO-99 PKG	27014	LM321H
A6A12U6	1826-0371	1	1	IC OP AMP LOW-BIAS-H-IMPD TO-99 PKG	27014	LF256H
A6A12U7	5081-8117	3	1	SCREEN 1826-0092	28480	5081-8117
A6A12U8	1826-1058	3	1	IC DP AMP GP 8-TO-99 PKG	06665	OP-02CJ
A6A12VR1	1902-3203	6	1	DIODE-ZNR 14.7V 5% DO-35 PD=.4W	04713	
A6A12VR3	1902-0025	4	1	DIODE-ZNR 10V 5% DO-35 PD=.4W TC=+.06%	04713	
A6A12VR4	1902-3203	6	1	DIODE-ZNR 14.7V 5% DO-35 PD=.4W	04713	
A6A12VR5	1902-0625	0	1	DIODE-ZNR 1N829 6.2V 5% DO-7 PD=.25W	04713	1N829

**Indicates factory-selected value*

HP Part Number 85660-60235

A6A12 YTX Driver

Reference Designation	HP Part Number	C D	Qty	Description	Mfr Code	Mfr Part Number
A6A12	85660-60235	1	1	BD ASSEMBLY, YIG-TUNED MIXER (YTX) DRIVE (SERIAL PREFIX: 2503A - 2928A)	28480	85660-60235
A6A12C1*	0180-2205	3	1	CAPACITOR-FXD .33UF+-10% 35VDC TA	56289	150D334X9035A2-DYS
A6A12C2*				SEE 85660-60235 SCHEMATIC DIAGRAM		
A6A12C4	0160-0571	0	1	CAPACITOR-FXD 470PF +-20% 100VDC CER	04222	SR201C471MAAH
A6A12C5	0160-0571	0	1	CAPACITOR-FXD 470PF +-20% 100VDC CER	04222	SR201C471MAAH
A6A12C6	0180-0197	8	1	CAPACITOR-FXD 2.2UF+-10% 20VDC TA	56289	150D225X9020A2-DYS
A6A12C7	0160-3097	1	1	CAPACITOR-FXD .47UF +80-20% 50VDC CER	04222	SR835E474ZAAH
A6A12C8	0160-3879	7	1	CAPACITOR-FXD .01UF +-20% 100VDC CER	04222	SR201C103MAAH
A6A12C9	0160-3097	1	1	CAPACITOR-FXD .47UF +80-20% 50VDC CER	04222	SR835E474ZAAH
A6A12C10	0180-0197	8	1	CAPACITOR-FXD 2.2UF+-10% 20VDC TA	56289	150D225X9020A2-DYS
A6A12C11*	0180-1735	2	1	CAPACITOR-FXD .22UF+-10% 35VDC TA	56289	150D224X9035A2-DYS
A6A12C12	0160-0571	0	1	CAPACITOR-FXD 470PF +-20% 100VDC CER	04222	SR201C471MAAH
A6A12C13	0160-0571	0	1	CAPACITOR-FXD 470PF +-20% 100VDC CER	04222	SR201C471MAAH
A6A12C14	0180-0197	a	1	CAPACITOR-FXD 2.2UF+-10% 20VDC TA	56289	150D225X9020A2-DYS
A6A12C15	0160-3097	1	1	CAPACITOR-FXD .47UF +80-20% 50VDC CER	04222	SR835E474ZAAH
A6A12C16	0160-4084	a	1	CAP-FXD 0.1uF 50 V	56289	1C20X7R104M050B
A6A12C17	0160-3097	1	1	CAPACITOR-FXD .47UF +80-20% 50VDC CER	04222	SR835E474ZAAH
A6A12C18	0180-0229	7	1	CAP-FXO 33uF 10 V TA	56289	150D336X9010B2-DYS
A6A12C19	0180-0116	1	1	CAPACITOR-FXD 6.8UF+-10% 35VDC TA	56289	150D685X9035B2-DYS
A6A12C20	0180-1746	5	1	CAPACITOR-FXD 15UF+-10% 20VDC TA	56289	150D156X9020B2-DYS
A6A12C21	0180-0116	1	1	CAPACITOR-FXD 6.8UF+-10% 35VDC TA	56289	150D685X9035B2-DYS
A6A12C22	0180-0229	7	1	CAP-FXD 33uF 10 V TA	56289	1500336X901082-DYS
A6A12C23*				SEE 85660-60235 SCHEMATIC DIAGRAM		
A6A12CR1	1901-1067	4	1	DIODE-SWITCHING 125V 175MA 60NS DO-35	27014	FDH444
A6A12CR2	1901-1067	4	1	DIODE-SWITCHING 125V 175MA 60NS DO-35	27014	FDH444
A6A12CR3	1901-1067	4	1	DIODE-SWITCHING 125V 175MA 60NS DO-35	27014	FDH444
A6A12CR4	1901-1067	4	1	DIODE-SWITCHING 125V 175MA 60NS DO-35	27014	FDH444
A6A12CR5	1901-1067	4	1	DIODE-SWITCHING 125V 175MA 60NS DO-35	27014	FDH444
A6A12CR6	1901-1067	4	1	DIODE-SWITCHING 125V 175MA 60NS DO-35	27014	FDH444
A6A12CR7	1901-1067	4	1	DIODE-SWITCHING 125V 175MA 60NS DO-35	27014	FDH444
A6A12CR8	1901-1067	4	1	DIODE-SWITCHING 125V 175MA 60NS DO-35	27014	FDH444
A6A12CR9	1901-1067	4	1	DIODE-SWITCHING 125V 175MA 60NS DO-35	27014	FDH444
A6A12CR10	1901-1067	4	1	DIODE-SWITCHING 125V 175MA 60NS DO-35	27014	FDH444
A6A12CR11	1901-1067	4	1	DIODE-SWITCHING 125V 175MA 60NS DO-35	27014	FDH444
A6A12CR12	1901-1067	4	1	DIODE-SWITCHING 125V 175MA 60NS DO-35	27014	FDH444
A6A12CR14	1901-1067	4	1	DIODE-SWITCHING 125V 175MA 60NS DO-35	27014	FDH444
A6A12CR15	1901-1067	4	1	DIODE-SWITCHING 125V 175MA 60NS DO-35	27014	FDH444
A6A12CR16	1901-1067	4	1	DIODE-SWITCHING 125V 175MA 60NS DO-35	27014	FDH444
A6A12CR17	1901-1067	4	1	DIODE-SWITCHING 125V 175MA 60NS DO-35	27014	FDH444
A6A12CR18	1901-1067	4	1	DIODE-SWITCHING 125V 175MA 6DNS DO-35	27014	FDH444
A6A12J1	1250-0543	8	1	CONNECTOR-RF SM-SNP M PC 50-OHM	98291	51-053-0349-BE8
A6A12J2	1250-0543	B	1	CONNECTOR-RF SM-SNP M PC 50-OHM	98291	51-053-0349-BE8
A6A12MP1				NOT ASSIGNED		
A6A12MP2	1480-0073	6	2	PIN-ROLL .062-IN-DIA .25-IN-LG BE-CU	72962	99-012-062-0250
A6A12MP3	4040-0749	4	1	EXTR-PC BD BRN POLYC .062-IN-BD-THKNS		
A6A12MP4	4040-0750	7	1	EXTR-PC BD RED POLYC .062-IN-BD-THKNS		

**Indicates factory-selected value*

HP Part Number 85660-60235

A6A12 YTX Driver

Reference Designation	HP Part Number	C	Qty	Description	Mfr Code	Mfr Part Number
A6A12Q1	1855-0414	4	1	TRANSISTOR J-FET 2N4393 N-CHAN D-MODE	17856	2N4393
A6A12Q2	1855-0414	4	1	TRANSISTOR J-FET 2N4393 N-CHAN D-MODE	17856	2N4393
A6A12Q3	1855-0414	4	1	TRANSISTOR J-FET 2N4393 N-CHAN D-MODE	17856	2N4393
A6A12Q4	1855-0420	2	1	TRANSISTOR J-FET 2N4391 N-CHAN D-MODE	17856	2N4391
A6A12Q5	1855-0420	2	1	TRANSISTOR J-FET 2N4391 N-CHAN D-MODE	17856	2N4391
A6A12Q6	1855-0420	2	1	TRANSISTOR J-FET 2N4391 N-CHAN D-MODE	17856	2N4391
A6A12Q7	1855-0414	4	1	TRANSISTOR J-FET 2N4393 N-CHAN D-MODE	17856	2N4393
A6A12Q8	1855-0414	4	1	TRANSISTOR J-FET 2N4393 N-CHAN D-MODE	17856	2N4393
A6A12Q9	1855-0414	4	1	TRANSISTOR J-FET 2N4393 N-CHAN D-MODE	17856	2N4393
A6A12Q10	1855-0414	4	1	TRANSISTOR J-FET 2N4393 N-CHAN D-MODE	17856	2N4393
A6A12Q11	1853-0281	9	1	TRANSISTOR PNP 2N2907A SI TO-18 PD=400MW	04713	2N2907A
A6A12Q12	1855-0414	4	1	TRANSISTOR J-FET 2N4393 N-CHAN D-MODE	17856	2N4393
A6A12Q13	1853-0007	7	1	TRANSISTOR PNP 2N3251 SI TO-18 PD=360MW	04713	2N3251
A6A12Q14	1853-0007	7	1	TRANSISTOR PNP 2N3251 SI TO-18 PD=360MW	04713	2N3251
A6A12Q15	1855-0420	2	1	TRANSISTOR J-FET 2N4391 N-CHAN D-MODE	17856	2N4391
A6A12Q16	1854-0637	1	1	TRANSISTOR NPN 2N2219A SI TO-5 PD=800MW	04713	2N2219A
A6A12Q17	1853-0322	9	1	TRANSISTOR PNP 2N2946A SI TO-46 PD=400MW	*04713*	
A6A12Q18	1854-0477	7	1	TRANSISTOR NPN 2N2222A SI TO-18 PD=500MW	04713	2N2222A
A6A12Q19	1854-0477	7	1	TRANSISTOR NPN 2N2222A SI TO-18 PD=500MW	04713	2N2222A
A6A12Q20	1855-0420	2	1	TRANSISTOR J-FET 2N4391 N-CHAN D-MODE	17856	2N4391
A6A12R1	0698-8067	4	1	RESISTOR 5K +-0.01% .15W MF TC=O+-1.3	18612	301358
A6A12R2	0698-8067	4	1	RESISTOR 5K +-0.01% .15W MF TC=O+-1.3	18612	301358
A6A12R3	0698-8067	4	1	RESISTOR 5K +-0.01% .15W MF TC=O+-1.3	18612	301358
A6A12R4	0698-8067	4	1	RESISTOR 5K +-0.01% .15W MF TC=O+-1.3	18612	301358
A6A12R5	0699-0153	5	1	RESISTOR 2K +-0.1% .225W MF TC=O+-1.3	18612	301358
A6A12R6	0698-3153	9	1	RESISTOR 3.83K 1% .125W TF TC=O+-100	19701	SFR25H
A6A12R7	0698-8625	C	1	RESISTOR 1K +-0.1% .1W TF TC=O+-5	19701	50232
A6A12R8	0698-8625	C	1	RESISTOR 1K +-0.1% .1W TF TC=O+-5	19701	50232
A6A12R9	0698-8625	C	1	RESISTOR 1K +-0.1% .1W TF TC=O+-5	19701	50232
A6A12R10	0698-8625	C	1	RESISTOR 1K +-0.1% .1W TF TC=O+-5	19701	50232
A6A12R11	0698-0083	a	1	RESISTOR 1.96K 1% .125W TF TC=O+-100	19701	SFR25H
A6A12R12	0698-0083	a	1	RESISTOR 1.96K 1% .125W TF TC=O+-100	19701	SFR25H
A6A12R13	0698-0083	a	1	RESISTOR 1.96K 1% .125W TF TC=O+-100	19701	SFR25H
A6A12R14	0698-0083	a	1	RESISTOR 1.96K 1% .125W TF TC=O+-100	19701	SFR25H
A6A12R15	0698-3453	2	1	RESISTOR 196K 1% .125W TF TC=O+-100	19701	SFR25H
A6A12R16	0698-3453	2	1	RESISTOR 196K 1% .125W TF TC=O+-100	19701	SFR25H
A6A12R17	0698-3453	2	1	RESISTOR 196K 1% .125W TF TC=O+-100	19701	SFR25H
A6A12R18	0698-3453	2	1	RESISTOR 196K 1% .125W TF TC=O+-100	19701	SFR25H
A6A12R19	0757-0280	3	1	RESISTOR 1K +-1% .125W TF TC=O+-100	19701	SFR25H
A6A12R20	0757-0280	3	1	RESISTOR 1K +-1% .125W TF TC=O+-100	19701	SFR25H
A6A12R21	1757-0280	3	1	RESISTOR 1K +-1% .125W TF TC=O+-100	19701	SFR25H
A6A12R22	1757-0280	3	1	RESISTOR 1K +-1% .125W TF TC=O+-100	19701	SFR25H
A6A12R23	1757-0442	3	1	RESISTOR 10K +-1% .125W TF TC=O+-100	19701	SFR25H
A6A12R24	1100-3353	8	1	RESISTOR-TRMR 20K 10% TKF SIDE-ADJ I-TRN	32997	3386X-Y46-203
A6A12R25	1100-3353	8	1	RESISTOR-TRMR 20K 10% TKF SIDE-ADJ l-TRN	32997	3386X-Y46-203
A6A12R26	1100-3357	2	1	RESISTOR-TRMR 500K 10% TKF SIDE-ADJ l-TR	32997	3386X-Y46-504
A6A12R27	1698-3453	2	1	RESISTOR 196K 1% .125W TF TC=O+-100	19701	SFR25H
A6A12R28	1698-3453	2	1	RESISTOR 196K 1% .125W TF TC=O+-100	19701	SFR25H

Indicates factory-selected value

HP Part Number 85660-60235

A6A12 YTX Driver

Reference Designation	HP Part Number	CD	Qty	Description	Mfr Code	Mfr Part Number
A6A12R29	0698-3453	2	1	RESISTOR 196K 1% .125W TF TC=D+-100	*19701*	SFR25H
A6A12R30	0757-0280	3	1	RESISTOR 1K +-1% .125W TF TC=O+-100	19701	SFR25H
A6A12R31	0757-0280	3	1	RESISTOR 1K +-1% .125W TF TC=O+-100	19701	SFR25H
A6A12R32	0757-0280	3	1	RESISTOR 1K +-1% .125W TF TC=O+-100	19701	SFR25H
A6A12R33	0757-0442	9	1	RESISTOR 10K +-1% .125W TF TC=O+-100	19701	SFR25H
A6A12R34	0757-0438	3	1	RESISTOR 5.11K +-1% .125W TF TC=O+-100	19701	SFR25H
A6A12R35	0757-0438	3	1	RESISTOR 5.11K +-1% .125W TF TC=O+-100	19701	SFR25H
A6A12R36	0698-3157	3	1	RESISTOR 19.6K 1% .125W TF TC=O+-100	19701	SFR25H
A6A12R37	0698-3157	3	1	RESISTOR 19.6K 1% .125W TF TC=O+-100	19701	SFR25H
A6A12R38	0698-4037	0	1	RESISTOR 46.4 1% .125W TF TC=O+-100	19701	SFR25H
A6A12R39	0698-4037	0	1	RESISTOR 46.4 1% .125W TF TC=O+-100	19701	SFR25H
A6A12R40	0757-0401	0	1	RESISTOR 100 +-1% .125W TF TC=O+-100	19701	SFR25H
A6A12R41	0698-4037	0	1	RESISTOR 46.4 1% .125W TF TC=O+-100	19701	SFR25H
A6A12R42	0698-4037	0	1	RESISTOR 46.4 1% .125W TF TC=O+-100	19701	SFR25H
A6A12R43	0698-8827	4	1	RESISTOR 1M +-1% .125W TF TC=O+-100	19701	SFR25H
A6A12R44	0698-0083	8	1	RESISTOR 1.96K 1% .125W TF TC=O+-100	19701	SFR25H
A6A12R45	0757-0401	0	1	RESISTOR 100 +-1% .125W TF TC=O+-100	19701	SFR25H
A6A12R46	0757-0465	6	1	RESISTOR 100K +-1% .125W TF TC=O+-100	19701	SFR25H
A6A12R47	0698-0082	7	1	RESISTOR 464 1% .125W TF TC=O+-100	19701	SFR25H
A6A12R48	0698-8625	0	1	RESISTOR 1K +-0.1% .1W TF TC=O+-5	19701	50232
A6A12R49	0757-0442	9	1	RESISTOR 10K +-1% .125W TF TC=O+-100	19701	SFR25H
A6A12R50	0757-0465	6	1	RESISTOR 100K +-1% .125W TF TC=O+-100	19701	SFR25H
A6A12R51	0757-0280	3	1	RESISTOR 1K +-1% .125W TF TC=O+-100	19701	SFR25H
A6A12R52	0757-0442	9	1	RESISTOR 10K +-1% .125W TF TC=O+-100	19701	SFR25H
A6A12R54	0698-7479	0	1	RESISTOR 10K +-0.1% .225W MF TC=O+-1.5	18612	301359
A6A12R55	0698-7479	0	1	RESISTOR 10K +-0.1% .225W MF TC=O+-1.5	18612	301359
A6A12R56	0698-3157	3	1	RESISTOR 19.6K 1% .125W TF TC=O+-100	19701	SFR25H
A6A12R57	0698-3157	3	1	RESISTOR 19.6K 1% .125W TF TC=O+-100	19701	SFR25H
A6A12R58	0698-0082	7	1	RESISTOR 464 1% .125W TF TC=O+-100	19701	SFR25H
A6A12R59	0698-403 7	0	1	RESISTOR 46.4 1% .125W TF TC=O+-100	19701	SFR25H
A6A12R60	*0698-4037*	0	1	RESISTOR 46.4 1% .125W TF TC=O+-100	19701	SFR25H
A6A12R61	*0698-8625*	0	1	RESISTOR 1K +-0.1% .1W TF TC=O+-5	19701	50232
A6A12R62	*0698-8827*	4	1	RESISTOR 1M +-1% .125W TF TC=O+-100	19701	SFR25H
A6A12R63	2100-3962	5	1	RESISTOR-TRMR 5K 10% TF SIDE-ADJ 25-TRN	18612	1280
A6A12R64*	0698-7133	3	1	RESISTOR 15K +-0.05% .225W MF	18612	301358
A6A12R65	0698-8485	0	1	RESISTOR 6.69K +-0.1% .1W TF TC=O+4	19701	50232
A6A12R66	2100-3962	5	1	RESISTOR-TRMR 5K 10% TF SIDE-ADJ 25-TRN	18612	1280
A6A12R67	0698-8625	0	1	RESISTOR 1K +-0.1% .1W TF TC=O+-5	19701	50232
A6A12R68	3698-8485	0	1	RESISTOR 6.69K +-0.1% .1W TF TC=O+4	19701	50232
A6A12R69	0698-6407	2	1	RESISTOR 32.8K +-0.1% .1W TF TC=O+4	19701	50232
A6A12R70	3698-3158	4	1	RESISTOR 23.7K 1% .125W TF TC=O+-100	19701	SFR25H
A6A12R71	0757-0442	9	1	RESISTOR 10K +-1% .125W TF TC=O+-100	19701	SFR25H
A6A12R72	0757-0442	9	1	RESISTOR 10K +-1% .125W TF TC=O+-100	19701	SFR25H
A6A12R73	3698-3151	7	1	RESISTOR 2.87K 1% .125W TF TC=O+-100	19701	SFR25H
A6A12R74	0757-0442	9	1	RESISTOR 10K +-1% .125W TF TC=O+-100	19701	SFR25H
A6A12R75	3698-8161	9	1	RESISTOR 20K +-1% .1W TF TC=O+-5	19701	50232
A6A12R76	3757-0442	9	1	RESISTOR 10K +-1% .125W TF TC=O+-100	19701	SFR25H

**Indicates factory-selected value*

HP Part Number 85660-60235

A6A12 YTX Driver

Reference Designation	HP Part Number	CD	Qty	Description	Mfr Code	Mfr Part Number
A6A12R77	0757-0465	6	1	RESISTOR 100K +-1% .125W TF TC=O+-100	19701	SFR25H
A6A12R78	0698-3161	9	1	RESISTOR 38.3K 1% .125W TF TC=0+-100	19701	SFR25H
A6A12R79	0698-3161	9	1	RESISTOR 38.3K 1% .125W TF TC=O+-100	19701	SFR25H
A6A12R80	0698-3161	9	1	RESISTOR 38.3K 1% .125W TF TC=O+-100	19701	SFR25H
A6A12R81	0698-3161	9	1	RESISTOR 38.3K 1% .125W TF TC=O+-100	19701	SFR25H
A6A12R82	2100-1661	7	1	RESISTOR-TRMR 20K 5% WW SIDE-ADJ 22-TRN	32997	3057P-DM3-203
A6A12R83	2100-1661	7	1	RESISTOR-TRMR 20K 5% WW SIDE-ADJ 22-TRN	32997	3057P-DM3-203
A6A12R84	2100-1661	7	1	RESISTOR-TRMR 20K 5% WW SIDE-ADJ 22-TRN	32997	3057P-DM3-203
A6A12R85	2100-1661	7	1	RESISTOR-TRMR 20K 5% WW SIDE-ADJ 22-TRN	32997	3057P-DM3-203
A6A12R86	0698-3453	2	1	RESISTOR 196K 1% .125W TF TC=O+-100	19701	SFR25H
A6A12R87	0698-3453	2	1	RESISTOR 196K 1% .125W TF TC=O+-100	19701	SFR25H
A6A12R88	0698-3453	2	1	RESISTOR 196K 1% .125W TF TC=O+-100	19701	SFR25H
A6A12R89	0698-3453	2	1	RESISTOR 196K 1% .125W TF TC=O+-100	19701	SFR25H
A6A12R90	0757-0280	3	1	RESISTOR 1K +-1% .125W TF TC=O+-100	19701	SFR25H
A6A12R91	0757-0280	3	1	RESISTOR 1K +-1% .125W TF TC=O+-100	19701	SFR25H
A6A12R92	0757-0280	3	1	RESISTOR 1K +-1% .125W TF TC=D+-100	19701	SFR25H
A6A12R93	0757-0280	3	1	RESISTOR 1K +-1% .125W TF TC=O+-100	19701	SFR25H
A6A12R94	0757-0465	6	1	RESISTOR 100K +-1% .125W TF TC=O+-100	19701	SFR25H
A6A12R95	0757-0401	0	1	RESISTOR 100 +-1% .125W TF TC=O+-100	19701	SFR25H
A6A12R96	0698-3156	2	1	RESISTOR 14.7K 1% .125W TF TC=O+-100	19701	SFR25H
A6A12R97	0757-0444	1	1	RESISTOR 12.1K +-1% .125W TF TC=O+-100	19701	SFR25H
A6A12R98	2100-3390	3	1	RESISTOR-TRMR 1K 10% TF SIDE-ADJ 25-TRN	18612	1202-Y-1K
A6A12R99	0757-0442	9	1	RESISTOR 10K +-1% .125W TF TC=O+-100	19701	SFR25H
A6A12R100	0757-0442	9	1	RESISTOR 10K +-1% .125W TF TC=O+-100	19701	SFR25H
A6A12R101	0757-0458	7	1	RESISTOR 51.1K +-1% .125W TF TC=O+-100	19701	SFR25H
A6A12R102	0757-0289	2	1	RESISTOR 13.3K +-1% .125W TF TC=O+-100	19701	SFR25H
A6A12R103	0757-0346	2	1	RESISTOR 10 +-1% .125W TF TC=O+-100	91637	CMF-55-1, T-l
A6A12R104	0757-0346	2	1	RESISTOR 10 +-1% .125W TF TC=O+-100	91637	CMF-55-1, T-l
A6A12R105	0757-0346	2	1	RESISTOR 10 +-1% .125W TF TC=D+-100	91637	CMF-55-1, T-l
A6A12R106	0757-0346	2	1	RESISTOR 10 +-1% .125W TF TC=O+-100	91637	CMF-55-1, T-l
A6A12R107	0698-5667	4	1	RESISTOR 375 +-0.25% .125W TF TC=O+-25	19701	5033R
A6A12R108	0698-0083	8	1	RESISTOR 1.96K 1% .125W TF TC=O+-100	19701	SFR25H
A6A12R109	0698-7479	0	1	RESISTOR 10K +-0.1% .225W MF TC=O+-1.5	18612	301359
A6A12R110	0757-0401	0	1	RESISTOR 100 +-1% .125W TF TC=O+-100	19701	SFR25H
A6A12R111	0757-0438	3	1	RESISTOR 5.11K +-1% .125W TF TC=O+-100	19701	SFR25H
A6A12R112	0698-8547	5	1	RESISTOR 4K +-0.5% .1W TF TC=O+-5	19701	50232
A6A12R113	2100-3154	7	1	RESISTOR-TRMR 1K 10% TKF SIDE-ADJ 17-TRN	73138	89PR1K
A6A12R114	0698-8067	4	1	RESISTOR 5K +-0.01% .15W MF TC=O+-1.3	18612	301358
A6A12R115	0698-8067	4	1	RESISTOR 5K +-0.01% .15W MF TC=O+-1.3	18612	301358
A6A12R116	0757-0401	0	1	RESISTOR 100 +-1% .125W TF TC=O+-100	19701	SFR25H
A6A12R117	0757-0438	3	1	RESISTOR 5.11K +-1% .125W TF TC=O+-100	19701	SFR25H
A6A12R118	0757-0442	3	1	RESISTOR 10K +-1% .125W TF TC=O+-100	19701	SFR25H
A6A12R119	0698-8827	4	1	RESISTOR 1M +-1% .125W TF TC=O+-100	19701	SFR25H
A6A12R120	0698-3437	2	1	RESISTOR 133 1% .125W TF TC=O+-100	19701	SFR25H
A6A12TP1	1251-0600	0	1	CONNECTOR-SGL CONT PIN 1.14-MM-BSC-SZ SQ	27264	16-06-0034
A6A12TP2	1251-0600	0	1	CONNECTOR-SGL CDNT PIN 1.14-MM-BSC-SZ SQ	27264	16-06-0034
A6A12TP3	1251-0600	0	1	CONNECTOR-SGL CONT PIN 1.14-MM-BSC-SZ SQ	27264	16-06-0034
A6A12TP4	1251-0600	0	1	CONNECTOR-SGL CONT PIN 1.14-MM-BSC-SZ SQ	27264	16-06-0034

**Indicates facto y-selected value*

HP Part Number 85660-60235

A6A12 YTX Driver

Reference Designation	HP Part Number	C D	Qty	Description	Mfr Code	Mfr Part Number
A6A12TP5	1251-0600	0	1	CONNECTOR-SGL CONT PIN 1.14-MM-BSC-SZ SQ	27264	16-06-0034
A6A12TP6	1251-0600	0	1	CONNECTOR-SGL CONT PIN 1.14-MM-BSC-SZ SQ	27264	16-06-0034
A6A12U1	5081-8117	3	1	SCREENED 1826-0092 OP AMP	28480	5081-8117
A6A12U2	5081-8117	3	1	SCREENED 1826-0092 OP AMP	28480	5081-8117
A6A12U3	1826-0162	8	1	IC PREAMPLIFIER TO-99 PKG	27014	LM321H
A6A12U4	5081-8117	3	1	SCREENED 1826-0092 DP AMP	28480	5081-8117
A6A12U5	1826-0162	8	1	IC PREAMPLIFIER TO-99 PKG	27014	LM321H
A6A12U6	1826-0371	1	1	IC OP AMP LOW-BIAS-H-IMPD TO-99 PKG	27014	LF256H
A6A12U7	5081-8117	3	1	SCREENED 1826-0092 OP AMP	28480	5081-8117
A6A12U8	1826-1058	3	1	IC DP AMP GP 8-TD-99 PKG	06665	DP-OECJ
A6A12VR1	1902-3203	6	1	DIODE-ZNR 14.7V 5% DO-35 PD=.4W	04713	
A6A12VR3	1902-0025	4	1	DIODE-ZNR 10V 5% DO-35 PD=.4W TC=+.06%	04713	
A6A12VR4	1902-3203	6	1	DIODE-ZNR 14.7V 5% DO-35 PD=.4W	04713	
A6A12VR5	1902-0686	3	1	DIODE-ZNR 6.2V 2% DO-7 PD=.4W TC=+.002%	04713	1N825

**Indicates factoy-selected value*

HP Part Number 85660-60366

A6A12 YTX Driver

Reference Designation	HP Part Number	C. D	Qty	Description	Mfr Code	Mfr Part Number
A6A12	85660-60366	9	1	30 ASSEMBLY, YIG-TUNED MIXER (YTX) DRIVE (SERIAL PREFIX: 2936A)	28480	85660-60366
A6A12C1*	0180-2205		1	CAPACITOR-FXD .33UF+-10% 35VDC TA	56289	150D334X9035A2-DYS
A6A12C2*				SEE 85660-60366 SCHEMATIC DIAGRAM		
A6A12C4	0160-0571	0	1	CAPACITOR-FXD 470PF +-20% 100VDC CER	04222	SR201C471MAAH
A6A12C5	0160-0571	0	1	CAPACITOR-FXD 470PF +-20% 100VDC CER	04222	SR201C471MAAH
A6A12C6	0180-0197	8	1	CAPACITOR-FXD 2.2UF+-10% 20VDC TA	56289	150D225X9020A2-DYS
A6A12C7	0160-3097	1	1	CAPACITOR-FXD .47UF +80-20% 50VDC CER	04222	SR835E474ZAAH
A6A12C8	0160-3879	7	1	CAPACITOR-FXD .01UF +-20% 100VDC CER	04222	SR201C103MAAH
A6A12C9	0160-3097	1	1	CAPACITOR-FXD .47UF +80-20% 50VDC CER	04222	SR835E474ZAAH
A6A12C10	0180-0197	8	1	CAPACITOR-FXD 2.2UF+-10% 20VDC TA	56289	150D225X9020A2-DYS
A6A12C11*	0180-1735	2	1	CAPACITOR-FXD .22UF+-10% 35VDC TA	56289	150D224X9035A2-DYS
A6A12C12	0160-0571	0	1	CAPACITOR-FXD 470PF +-20% 100VDC CER	04222	SR201C471MAAH
A6A12C13	3160-0571	0	1	CAPACITOR-FXD 470PF +-20% 100VDC CER	04222	SR201C471MAAH
A6A12C14	3180-0197	8	1	CAPACITOR-FXD 2.2UF+-10% 20VDC TA	56289	150D225X9020A2-DYS
A6A12C15	0160-3097	1	1	APACITOR-FXD .47UF +80-20% 50VDC CER	04222	SR835E474ZAAH
A6A12C16	0160-4084	8	1	AP-FXD 0.1uF 50 V	56289	1C20X7R104M050B
A6A12C17	1160-3097	1	1	APACITOR-FXD .47UF +80-20% 50VDC CER	04222	SR835E474ZAAH
A6A12C18	0180-0229	7	1	:AP-FXD 33uF 10 V TA	56289	150D336X9010B2-DYS
A6A12C19	0180-0116	1	1	CAPACITOR-FXD 6.8UF+-10% 35VDC TA	56289	150D685X9035B2-DYS
A6A12C20	0180-1746	5	1	CAPACITOR-FXD 15UF+-10% 20VDC TA	56289	150D156X9020B2-DYS
A6A12C21	0180-0116	1	1	CAPACITOR-FXD 6.8UF+-10% 35VDC TA	56289	150D685X9035B2-DYS
A6A12C22	0180-0229	7	1	:AP-FXD 33uF 10 V TA	56289	150D336X9010B2-DYS
A6A12C23*				SEE 85660-60366 SCHEMATIC DIAGRAM		
A6A12CR1	1901-1067	4	1	IIODE-SWITCHING 125V 175MA 60NS DO-35	27014	FDH444
A6A12CR2	1901-1067	4	1	IIODE-SWITCHING 125V 175MA 60NS DO-35	27014	FDH444
A6A12CR3	1901-1067	4	1	DIODE-SWITCHING 125V 175MA 60NS DO-35	27014	FDH444
A6A12CR4	1901-1067	4	1	IIODE-SWITCHING 125V 175MA 60NS DO-35	27014	FDH444
A6A12CR5	1901-1067	4	1	IIODE-SWITCHING 125V 175MA 60NS DO-35	27014	FDH444
A6A12CR6	1901-1067	4	1	IIODE-SWITCHING 125V 175MA 60NS DO-35	27014	FDH444
A6A12CR7	1901-1067	4	1	IIODE-SWITCHING 125V 175MA 60NS DO-35	27014	FDH444
A6A12CR8	1901-1067	4	1	IIOOE-SWITCHING 125V 175MA 60NS DO-35	27014	FDH444
A6A12CR9	1901-1067	4	1	IIODE-SWITCHING 125V 175MA 60NS DO-35	27014	FDH444
A6A12CR10	1901-1067	4	1	IIODE-SWITCHING 125V 175MA 60NS DO-35	27014	FDH444
A6A12CR11	1901-1067	4	1	DIODE-SWITCHING 125V 175MA 60NS DO-35	27014	FDH444
A6A12CR12	1901-1067	4	1	DIODE-SWITCHING 125V 175MA 60NS DO-35	27014	FDH444
A6A12CR14	1901-1067	4	1	DIODE-SWITCHING 125V 175MA 60NS DO-35	27014	FDH444
A6A12CR15	1901-1067	4	1	IODE-SWITCHING 125V 175MA 60NS DO-35	27014	FDH444
A6A12CR16	1901-1067	4	1	IODE-SWITCHING 125V 175MA 60NS DO-35	27014	FDH444
A6A12CR17	1901-1067	4	1	IODE-SWITCHING 125V 175MA 60NS DO-35	27014	FDH444
A6A12CR18	1901-1067	4	1	IODE-SWITCHING 125V 175MA 60NS DO-35	27014	FDH444
A6A12CR19	1901-1067	4	1	IODE-SWITCHING 125V 175MA 60NS DO-35	27014	FDH444
A6A12CR20	1901-1067	4	1	IODE-SWITCHING 125V 175MA 60NS DO-35	27014	FDH444
A6A12CR21	1901-1067	4	1	IODE-SWITCHING 125V 175MA 60NS DO-35	27014	FDH444
A6A12J1	1250-0543	8	1	ONNECTOR-RF SM-SNP M PC 50-OHM	98291	51-053-0349-BE8
A6A12J2	1250-0543	8	1	ONNECTOR-RF SM-SNP M PC 50-OHM	98291	51-053-0349-BE8
A6A12MP1				OT ASSIGNED		

**Indicates factory-selected value*

HP Part Number 85660-60366

A6A12 YTX Driver

Reference Designation	HP Part Number	C. D	Qty	Description	Mfr Code	Mfr **Part** Number
A6A12MP2	1480-0073	6	1	PIN-ROLL .062-IN-DIA .25-IN-LG BE-CU	72962	99-012-062-0250
A6A12MP3	4040-0749	4	1	EXTR-PC BD BRN POLYC .062-IN-BD-THKNS		
A6A12MP4	4040-0750	7	1	EXTR-PC BD RED POLYC .062-IN-BD-THKNS		
A6A12Q1	1855-0414	4	1	TRANSISTOR J-FET 2N4393 N-CHAN D-MODE	17856	2N4393
A6A12Q2	1855-0414	4	1	TRANSISTOR J-FET 2N4393 N-CHAN D-MODE	17856	2N4393
A6A12Q3	1855-0414	4	1	TRANSISTOR J-FET 2N4393 N-CHAN D-MODE	17856	2N4393
A6A12Q4	1855-0420	2	1	TRANSISTOR J-FET 2N4391 N-CHAN D-MODE	17856	2N4391
A6A12Q5	1855-0420	2	1	TRANSISTOR J-FET 2N4391 N-CHAN D-MODE	17856	2N4391
A6A12Q6	1855-0420	2	1	TRANSISTOR J-FET 2N4391 N-CHAN D-MODE	17856	2N4391
A6A12Q7	1855-0414	4	1	TRANSISTOR J-FET 2N4393 N-CHAN D-MODE	17856	2N4393
A6A12Q8	1855-0414	4	1	TRANSISTOR J-FET 2N4393 N-CHAN D-MODE	17856	2N4393
A6A12Q9	1855-0414	4	1	TRANSISTOR J-FET 2N4393 N-CHAN D-MODE	17856	2N4393
A6A12Q10	1855-0414	4	1	TRANSISTOR J-FET 2N4393 N-CHAN D-MODE	17856	2N4393
A6A12Q11	1853-0281	9	1	TRANSISTOR PNP 2N2907A SI TO-18 PD=400MW	04713	2N2907A
A6A12Q12	1855-0414	4	1	TRANSISTOR J-FET 2N4393 N-CHAN D-MODE	17856	2N4393
A6A12Q13	1853-0007	7	1	TRANSISTOR PNP 2N3251 SI TO-18 PD=360MW	0471:	2N3251
A6A12Q14	1853-0007	7	1	TRANSISTOR PNP 2N3251 SI TO-18 PD=360MW	04713	2N3251
A6A12Q15	1855-0420	2	1	TRANSISTOR J-FET 2N4391 N-CHAN D-MODE	17856	2N4391
A6A12Q16	1854-0637	1	1	TRANSISTOR NPN 2N2219A SI TO-5 PD=800MW	04713	2N2219A
A6A12Q17	1853-0322	9	1	TRANSISTOR PNP 2N2946A SI TO-46 PD=400MW	04713	
A6A12Q18	1854-0477	7	1	TRANSISTOR NPN 2N2222A SI TO-18 PD=500MW	04713	2N2222A
A6A12Q19	1854-0477	7	1	TRANSISTOR NPN 2N2222A SI TO-18 PD=500MW	04713	2N2222A
A6A12Q20	1855-0420	2	1	TRANSISTOR J-FET 2N4391 N-CHAN D-MODE	17856	2N4391
A6A12Q21	1854-0215	1	1	TRANSISTOR NPN SI TO-92 PD=350MW	04713	2N3904
A6A12R1	)698-8067	4	1	RESISTOR 5K +-0.01% .15W MF TC=O+-1.3	18612	301358
A6A12R2	)698-8067	4	1	RESISTOR 5K +-0.01% .15W MF TC=O+-1.3	18612	301358
A6A12R3	1698-8067	4	1	RESISTOR 5K +-0.01% .15W MF TC=O+-1.3	18612	301358
A6A12R4	1698-8067	4	1	RESISTOR 5K +-0.01% .15W MF TC=O+-1.3	18612	301358
A6A12R5	)699-0153	5	1	RESISTOR 2K +-0.1% .225W MF TC=O+-1.3	18612	301358
A6A12R6	)698-3153	9	1	RESISTOR 3.83K 1% .125W TF TC=O+-100	19701	SFR25H
A6A12R7	)698-8625	0	1	RESISTOR 1K +-0.1% .1W TF TC=O+-5	19701	50232
A6A12R8	)698-8625	0	1	RESISTOR 1K +-0.1% .1W TF TC=O+-5	19701	50232
A6A12R9	)698-8625	0	1	RESISTOR 1K +-0.1% .1W TF TC=O+-5	19701	50232
A6A12R10	1698-8625	3	1	RESISTOR 1K +-0.1% .1W TF TC=O+-5	19701	50232
A6A12R11	1698-0083	3	1	PESISTOR 1.96K 1% .125W TF TC=O+-100	19701	SFR25H
A6A12R12	)698-0083	3	1	RESISTOR 1.96K 1% .125W TF TC=O+-100	19701	SFR25H
A6A12R13	1698-0083	3	1	RESISTOR 1.96K 1% .125W TF TC=O+-100	19701	SFR25H
A6A12R14	1698-0083	3	1	RESISTOR 1.96K 1% .125W TF TC=O+-100	19701	SFR25H
A6A12R15	1698-3453	?	1	RESISTOR 196K 1% .125W TF TC=O+-100	19701	SFR25H
A6A12R16	1698-3453	'	1	RESISTOR 196K 1% .125W TF TC=O+-100	19701	SFR25H
A6A12R17	1698-3453	2	1	RESISTOR 196K 1% .125W TF TC=O+-100	19701	SFR25H
A6A12R18	1698-3453	2	1	RESISTOR 196K 1% .125W TF TC=O+-100	19701	SFR25H
A6A12R19	)757-0280	3	1	RESISTOR 1K +-1% .125W TF TC=O+-100	19701	SFR25H
A6A12R20	)757-0280	3	1	RESISTOR 1K +-1% .125W TF TC=O+-100	19701	SFR25H
A6A12R21	)757-0280	3	1	RESISTOR 1K +-1% .125W TF TC=O+-100	19701	SFR25H
A6A12R22	)757-0280	3	1	RESISTOR 1K +-1% .125W TF TC=O+-100	19701	SFR25H
A6A12R23	)757-0442	9	1	RESISTOR 10K +-1% .125W TF TC=O+-100	19701	SFR25H
A6A12R24	1100-3353	8	1	RESISTOR-TRMR 20K 10% TKF SIDE-ADJ 1-TRN	32997	3386X-Y46-203

Indicates factory-selected value

HP Part Number 85660-60366

A6A12 YTX Driver

Reference Designation	HP Part Number	CD	Qty	Description	Mfr Code	Mfr Part Number
A6A12R25	2100-3353	8	1	RESISTOR-TRMR 20K 10% TKF SIDE-ADJ l-TRN	32997	3386X-Y46-203
A6A12R26	2100-3357	2	1	RESISTOR-TRMR 500K 10% TKF SIDE-ADJ l-TR	32997	3386X-Y46-504
A6A12R27	0698-3453	2	1	RESISTOR 196K 1% .125W TF TC=O+-100	19701	SFR25H
A6A12R28	0698-3453	2	1	RESISTOR 196K 1% .125W TF TC=O+-100	19701	SFR25H
A6A12R29	0698-3453	2	1	RESISTOR 196K 1% .125W TF TC=O+-100	19701	SFR25H
A6A12R30	0757-0280	3	1	RESISTOR 1K +-1% .125W TF TC=O+-100	19701	SFR25H
A6A12R31	0757-0280	3	1	RESISTOR 1K +-1% .125W TF TC=O+-100	19701	SFR25H
A6A12R32	0757-0280	3	1	RESISTOR 1K +-1% .125W TF TC=O+-100	19701	SFR25H
A6A12R33	0757-0442	9	1	RESISTOR 10K +-1% .125W TF TC=O+-100	19701	SFR25H
A6A12R34	0757-0438	3	1	RESISTOR 5.11K +-1% .125W TF TC=O+-100	19701	SFR25H
A6A12R35	0757-0438	3	1	RESISTOR 5.11K +-1% .125W TF TC=O+-100	19701	SFR25H
A6A12R36	0698-3157	3	1	RESISTOR 19.6K 1% .125W TF TC=O+-100	19701	SFR25H
A6A12R37	0698-3157	3	1	RESISTOR 19.6K 1% .125W TF TC=O+-100	19701	SFR25H
A6A12R38	0698-4037	0	1	RESISTOR 46.4 1% .125W TF TC=O+-100	19701	SFR25H
A6A12R39	0698-4037	0	1	RESISTOR 46.4 1% .125W TF TC=O+-100	19701	SFR25H
A6A12R40	0757-0401	0	1	RESISTOR 100 +-1% .125W TF TC=O+-100	19701	SFR25H
A6A12R41	0698-4037	0	1	RESISTOR 46.4 1% .125W TF TC=O+-100	19701	SFR25H
A6A12R42	0698-4037	0	1	RESISTOR 46.4 1% .125W TF TC=O+-100	19701	SFR25H
A6A12R43	0698-8827	4	1	RESISTOR 1M +-1% .125W TF TC=O+-100	19701	SFR25H
A6A12R44	0698-0083	8	1	RESISTOR 1.96K 1% .125W TF TC=O+-100	19701	SFR25H
A6A12R45	0757-0401	0	1	RESISTOR 100 +-1% .125W TF TC=O+-100	19701	SFR25H
A6A12R46	0757-0465	6	1	RESISTOR 100K +-1% .125W TF TC=O+-100	19701	SFR25H
A6A12R47	0698-0082	7	1	RESISTOR 464 1% .125W TF TC=O+-100	19701	SFR25H
A6A12R48	0698-8625	0	1	RESISTOR 1K +-0.1% .1W TF TC=O+-5	19701	50232
A6A12R49	0757-0442	9	1	RESISTOR 10K +-1% .125W TF TC=O+-100	19701	SFR25H
A6A12R50	0757-0465	6	1	RESISTOR 100K +-1% .125W TF TC=O+-100	19701	SFR25H
A6A12R51	0757-0280	3	1	RESISTOR 1K +-1% .125W TF TC=O+-100	19701	SFR25H
A6A12R52	0757-0442	9	1	RESISTOR 10K +-1% .125W TF TC=O+-100	19701	SFR25H
A6A12R54	0698-7479	0	1	RESISTOR 10K +-0.1% .225W MF TC=O+-1.5	18612	301359
A6A12R55	0698-7479	0	1	RESISTOR 10K +-0.1% .225W MF TC=O+-1.5	18612	301359
A6A12R56	0698-3157	3	1	RESISTOR 19.6K 1% .125W TF TC=O+-100	19701	SFR25H
A6A12R57	0698-3157	3	1	RESISTOR 19.6K 1% .125W TF TC=O+-100	19701	SFR25H
A6A12R58	0698-0082	7	1	RESISTOR 464 1% .125W TF TC=O+-100	19701	SFR25H
A6A12R59	0698-4037	0	1	RESISTOR 46.4 1% .125W TF TC=O+-100	19701	SFR25H
A6A12R60	0698-4037	0	1	RESISTOR 46.4 1% .125W TF TC=O+-100	19701	SFR25H
A6A12R61	0698-8625	0	1	RESISTOR 1K +-0.1% .1W TF TC=O+-5	19701	50232
A6A12R62	0698-8827	4	1	RESISTOR 1M +-1% .125W TF TC=O+-100	19701	SFR25H
A6A12R63	2100-3962	5	1	RESISTOR-TRMR 5K 10% TF SIDE-ADJ 25-TRN	18612	1280
A6A12R64*	0698-7133	3	1	RESISTOR 15K +-0.05% .225W MF TC=O+-1.3	18612	301358
A6A12R65	0698-8485	0	1	RESISTOR 6.69K +-0.1% .1W TF TC=O+4	19701	50232
A6A12R66	2100-3962	5	1	RESISTOR-TRMR 5K 10% TF SIDE-ADJ 25-TRN	18612	1280
A6A12R67	0698-8625	0	1	RESISTOR 1K +-0.1% .1W TF TC=O+-5	19701	50232
A6A12R68	0698-8485	0	1	RESISTOR 6.69K +-0.1% .1W TF TC=O+4	19701	50232
A6A12R69	0698-6407	2	1	RESISTOR 32.8K +-0.1% .1W TF TC=O+4	19701	50232
A6A12R70	0698-3158	4	1	RESISTOR 23.7K 1% .125W TF TC=O+-100	19701	SFR25H
A6A12R71	0757-0442	9	1	RESISTOR 10K +-1% .125W TF TC=O+-100	19701	SFR25H
A6A12R72	0757-0442	9	1	RESISTOR 10K +-1% .125W TF TC=O+-100	19701	SFR25H

**Indicates factory-selected value*

HP Part Number 85660-60366

A6A12 YTX Driver

Reference Designation	HP Part Number	C. D	Qty	Description	Mfr Code	Mfr Part Number
A6A12R73	(1698-3151	7	1	RESISTOR 2.87K 1% .125W TF TC=O+-100	19701	SFR25H
A6A12R74	(1757-0442	9	1	RESISTOR 10K +-1% .125W TF TC=O+-100	19701	SFR25H
A6A12R75	0698-8161	9	1	RESISTOR 20K +-1% .1W TF TC=O+-5	19701	50232
A6A12R76	0757-0442	9	1	RESISTOR 10K +-1% .125W TF TC=O+-100	19701	SFR25H
A6A12R77	0757-0465	6	1	RESISTOR 100K +-1% .125W TF TC=O+-100	19701	SFR25H
A6A12R78	0698-3161	9	1	RESISTOR 38.31: 1% .125W TF TC=O+-100	19701	SFR25H
A6A12R79	0698-3161	9	1	RESISTOR 38.3K 1% .125W TF TC=O+-100	19701	SFR25H
A6A12R80	(1698-3161	9	1	RESISTOR 38.31: 1% .125W TF TC=O+-100	19701	SFR25H
A6A12R81	(1698-3161	9	1	RESISTOR 38.3K 1% .125W TF TC=O+-100	19701	SFR25H
A6A12R82	2!100-1661	7	1	RESISTOR-TRMR 20K 5% WW SIDE-ADJ 22-TRN	32997	3057P-DM3-203
A6A12R83	21100-1661	7	1	RESISTOR-TRMR 20K 5% WW SIDE-ADJ 22-TRN	32997	3057P-DM3-203
A6A12R84	21100-1661	7	1	RESISTOR-TRMR 20K 5% WW SIDE-ADJ 22-TRN	32997	3057P-DM3-203
A6A12R85	21100-1661	7	1	RESISTOR-TRMR 20K 5% WW SIDE-AOJ 22-TRN	32997	3057P-DM3-203
A6A12R86	a1698-3453	2	1	RESISTOR 196K 1% .125W TF TC=O+-100	19701	SFR25H
A6A12R87	a1698-3453	2	1	RESISTOR 196K 1% .125W TF TC=O+-100	19701	SFR25H
A6A12R88	O1698-3453	2	1	RESISTOR 196K 1% .125W TF TC=O+-100	19701	SFR25H
A6A12R89	O1698-3453	2	1	RESISTOR 196K 1% .125W TF TC=O+-100	19701	SFR25H
A6A12R90	0757-0280	3	1	RESISTOR 1K +-1% .125W TF TC=O+-100	19701	SFR25H
A6A12R91	0757-0280	3	1	RESISTOR 1K +-1% .125W TF TC=O+-100	19701	SFR25H
A6A12R92	0757-0280	3	1	RESISTOR 1K +-1% .125W TF TC=O+-100	19701	SFR25H
A6A12R93	0757-0280	3	1	RESISTOR 1K +-1% .125W TF TC=O+-100	19701	SFR25H
A6A12R94	0757-0465	6	1	RESISTOR 100K +-1% .125W TF TC=O+-100	19701	SFR25H
A6A12R95	0757-0401	0	1	RESISTOR 100 +-1% .125W TF TC=O+-100	19701	SFR25H
A6A12R96	0698-3156	2	1	RESISTOR 14.7K 1% .125W TF TC=O+-100	19701	SFR25H
A6A12R97	0757-0444	1	1	RESISTOR 12.1K +-1% .125W TF TC=O+-100	19701	SFR25H
A6A12R98	2100-3390	3	1	RESISTOR-TRMR 1K 10% TF SIDE-ADJ 25-TRN	18612	1202-Y-1K
A6A12R99	0757-0442	9	1	RESISTOR 10K +-1% .125W TF TC=O+-100	19701	SFR25H
A6A12R100	0757-0442	9	1	RESISTOR 10K +-1% .125W TF TC=O+-100	19701	SFR25H
A6A12R101	0757-0458	7	1	RESISTOR 51.1K +-1% .125W TF TC=O+-100	19701	SFR25H
A6A12R102	0757-0289	2	1	RESISTOR 13.3K +-1% .125W TF TC=O+-100	19701	SFR25H
A6A12R103	C1757-0346	2	1	RESISTOR 10 +-1% .125W TF TC=O+-100	91637	CMF-55-1. T-l
A6A12R104	C1757-0346	2	1	RESISTOR 10 +-1% .125W TF TC=O+-100	91637	CMF-55-1, T-l
A6A12R105	C1757-0346	2	1	RESISTOR 10 +-1% .125W TF TC=O+-100	91637	CMF-55-1, T-l
A6A12R106	C1757-0346	2	1	RESISTOR 10 +-1% .125W TF TC=O+-100	91637	CMF-55-1, T-l
A6A12R107	a1698-5667	4	1	RESISTOR 375 +-0.25% .125W TF TC=O+-25	19701	5033R
A6A12R108	0698-0083	8	1	RESISTOR 1.96K 1% .125W TF TC=O+-100	19701	SFR25H
A6A12R109	O1698-7479	0	1	RESISTOR 10K +-0.1% .225W MF TC=O+-1.5	18612	301359
A6A12R110	0757-0401	0	1	RESISTOR 100 +-1% .125W TF TC=O+-100	19701	SFR25H
A6A12R111	0757-0438	3	1	RESISTOR 5.11K +-1% .125W TF TC=O+-100	19701	SFR25H
A6A12R112	0698-8547	5	1	RESISTOR 4K +-0.5% .1W TF TC=O+-5	19701	50232
A6A12R113	2100-3154	7	1	RESISTOR-TRMR 1K 10% TKF SIDE-ADJ 17-TRN	73138	89PR1K
A6A12R114	0698-8067	4	1	RESISTOR 5K +-0.01% .15W MF TC=O+-1.3	18612	301358
A6A12R115	0698-8067	4	1	RESISTOR 5K +-0.01% .15W MF TC=O+-1.3	18612	301358
A6A12R116	0757-0401	0	1	RESISTOR 100 +-1% .125W TF TC=O+-100	19701	SFR25H
A6A12R117	0757-0438	3	1	RESISTOR 5.11K +-1% .125W TF TC=O+-100	19701	SFR25H
A6A12R118	0757-0442	9	1	RESISTOR 10K +-1% .125W TF TC=O+-100	19701	SFR25H
A6A12R119	0698-8827	4	1	RESISTOR 1M +-1% .125W TF TC=O+-100	19701	SFR25H
A6A12R120	0698-3437	2	1	RESISTOR 133 1% .125W TF TC=O+-100	19701	SFR25H

Indicates factory-selected value

HP Part Number 85660-60366

A6A12 YTX Driver

Reference Designation	HP Part Number	C D	Qty	Description	Mfr Code	Mfr Part Number
A6A12R121	0757-0438	3	1	RESISTOR 5.11K +-1% .125W TF TC=O+-100	19701	SFR25H
A6A12R122	0757-0442	9	1	RESISTOR 10K +-1% .125W TF TC=O+-100	19701	SFR25H
A6A12R123	1757-0465	6	1	RESISTOR 100K +-1% .125W TF TC=O+-100	19701	SFR25H
A6A12TP1	1251-0600	0	1	CONNECTOR-SGL CONT PIN 1.14-MM-BSC-SZ SQ	27264	16-06-0034
A6A12TP2	1251-0600	0	1	CONNECTOR-SGL CONT PIN 1.14-MM-BSC-SZ SQ	27264	16-06-0034
A6A12TP3	1251-0600	0	1	CONNECTOR-SGL CONT PIN 1.14-MM-BSC-SZ SQ	27264	16-06-0034
A6A12TP4	1251-0600	0	1	CONNECTOR-SGL CONT PIN 1.14-MM-BSC-SZ SQ	27264	16-06-0034
A6A12TP5	1251-0600	0	1	CONNECTOR-SGL CONT PIN 1.14-MM-BSC-SZ SQ	27264	16-06-0034
A6A12TP6	1251-0600	0	1	CONNECTOR-SGL CONT PIN 1.14-MM-BSC-SZ SQ	27264	16-06-0034
A6A12U1	5081-8117	3	1	SCREENED 1826-0092 OP AMP	28480	5081-8117
A6A12U2	5081-8117	3	1	SCREENED 1826-0092 OP AMP	28480	5081-8117
A6A12U3	.826-0162	8	1	IC PREAMPLIFIER TO-99 PKG	27014	LM321H
A6A12U4	5081-8117	3	1	SCREENED 1826-0092 OP AMP	28480	5081-8117
A6A12U5	.826-0162	8	1	IC PREAMPLIFIER TO-99 PKG	27014	LM321H
A6A12U6	.826-0371	1	1	IC OP AMP LOW-BIAS-H-IMPD TO-99 PKG	27014	LF256H
A6A12U7	5081-8117	3	1	SCREENED 1826-0092 OP AMP	28480	5081-8117
A6A12U8	826-1058	3	1	IC OP AMP GP a-TO-99 PKG	06665	OP-02CJ
A6A12VR1	902-3203	6	1	DIODE-ZNR 14.7V 5% DO-35 PD=.4W	04713	
A6A12VR3	902-0025	4	1	DIODE-ZNR 10V 5% DO-35 PD=.4W TC=+.06%	04713	
A6A12VR4	902-3203	6	1	DIODE-ZNR 14.7V 5% DO-35 PD=.4W	04713	
A6A12VR5	902-0686	3	1	IIODE-ZNR 6.2V 2% DO-7 PD=.4W TC=+.002%	04713	1N825

**Indicates factoy-selected value*

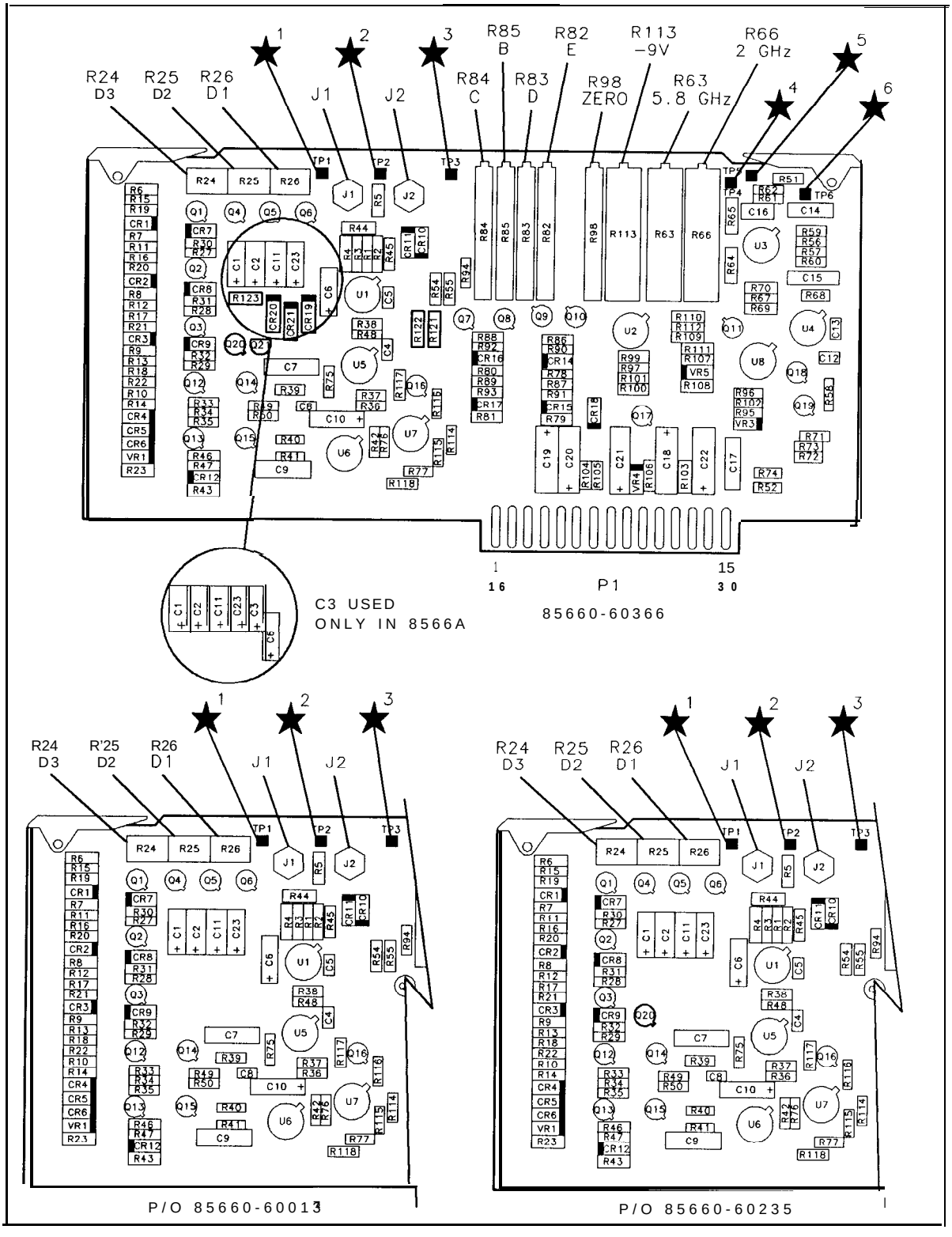

A6A12 YTX Driver Component Locations, 85660-60366, 85660-60013, 85660-60235

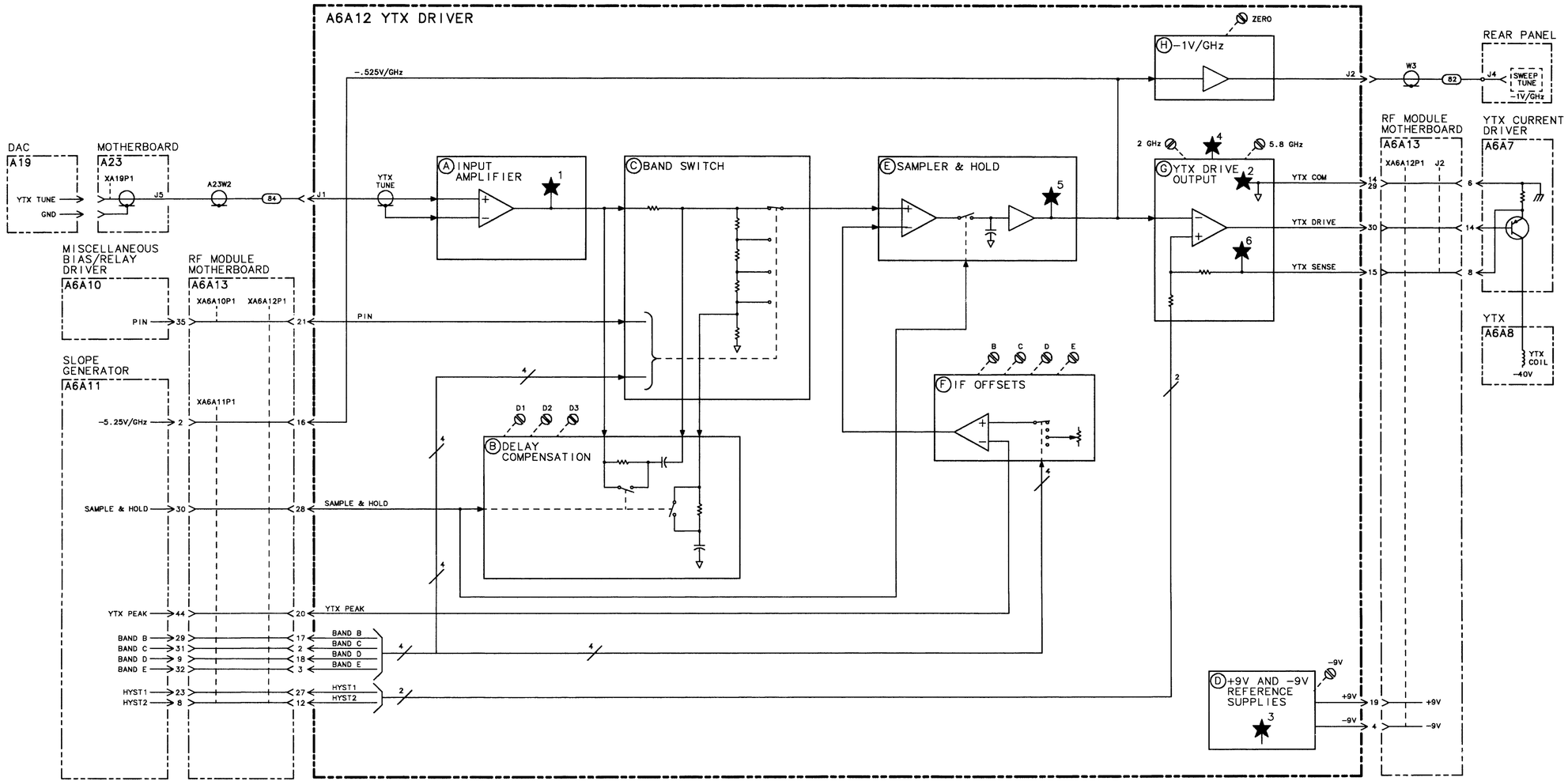

A6A12 YTX DRIVER, BLOCK DIAGRAM

A6A12 YIG-TUNED MIXER (YTX) DRIVER
85660-60013
(SERIAL PREFIXES: 2410A-2449A)

P1

PIN	SIGNAL	TO/FROM	FUNCTION BLOCK
1 16	NC -.525V/GHz	A6A11P1-2	E
2 17	BAND C BAND B	A6A11P1-31 A6A11P1-29	C C
3 18	BAND E BAND D	A6A11P1-32 A6A11P1-9	C C
4 19	-9V +9V	A6A11P1-11 A6A11P1-13 A6A9P1-13 A6A11P1-33 A6A10P1-33	D D
5 20	NC YTX PEAKING	A6A11P1-44	F
6 21	NC P1N	A6A10P1-35	C
7 22	+20V +20V		I I
8 23	-10V -10V		I I
9 24	GND GND		H H
10 25	-40V -40V		I I
11 26	+5.2V +5.2V		I I
12 27	HYST 2 HYST 1	A6A11P1-8 A6A11P1-23	G G
13 28	NC S AND H	A6A11P1-30	E
14 29	YTX COM YTX COM	A6A7J2-6 AND A6A10P1-22	G G
15 30	YTX SENSE YTX DRIVE	A6A10P1-21 A6A7J2-14	G G

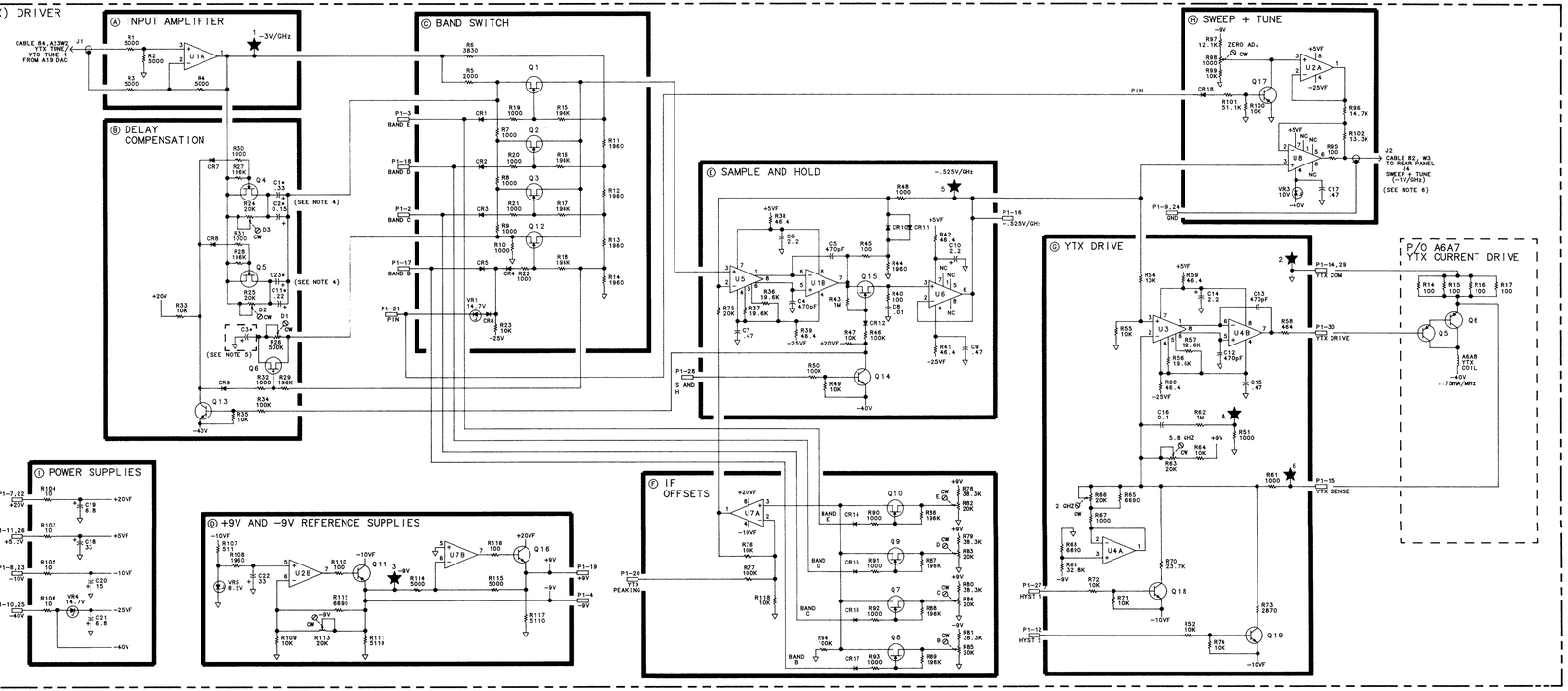

NOTES:

1. REFERENCE DESIGNATORS WITHIN THIS ASSEMBLY ARE ABBREVIATED. FOR COMPLETE REFERENCE DESIGNATION,PREFIX ABBREVIATION WITH ASSEMBLY DESIGNATION.
2. UNLESS OTHERWISE INDICATED: RESISTANCE IS IN OHMS (Ω) CAPACITANCE IS IN MICROFARADS(μF) INDUCTANCE IS IN MICROHENRIES(μH)
3. UNLESS OTHERWISE INDICATED: SIGNALS ENTER AT LEFT SIDE AND EXIT AT RIGHT SIDE OF FUNCTION BLOCKS.
4. C1*, C2*, C11*, AND C23* ARE FACTORY-SELECTED COMPONENTS. SOME OF THESE CAPACITORS MAY NOT BE USED IN THE CIRCUIT TO ACHIEVE PROPER DELAY COMPENSATION. IF THESE CAPACITORS ARE USED IN THE CIRCUIT, THE FOLLOWING HP PART NUMBERS AND VALUES MAY BE USED.

HP PART NUMBER	VALUE
0180-1743	0.10uF
0180-0218	0.15uF
0180-1735	0.22uF
0180-2205	0.33uF
0180-4441	0.47uF
0180-0373	0.68uF

5. C3* IS USED ONLY IN THE 8566A. IT IS NOT USED IN THE 8566B.
6. SHIELD OF CABLE B2 W3 IS ISOLATED FROM CHASSIS GROUND AT RF SECTION REAR PANEL.

A6A12

RF SECTION

A6A12 YIG-TUNED MIXER (YTX) DRIVER
85660-60366
(SERIAL PREFIX: 2936A)

P1

PIN	SIGNAL	TO/FROM	FUNCTION BLOCK
1	NC		
16	-.525V/GHz	A6A11P1-2	E
2	BAND C	A6A11P1-31	C
17	BAND B	A6A11P1-28	C
3	BAND E	A6A11P1-32	C
18	BAND D	A6A11P1-9	C
4	-9V	A6A11P1-11 AND A6A10P1-8 AND A6A9P1-19	D
19	+9V	A6A11P1-33 AND A6A10P1-33	D
5	NC		
20	YTX PEAKING	A6A11P1-44	F
6	NC		
21	P1N	A6A10P1-35	C
7	+20V		I
22	+20V		I
8	-10V		I
23	-10V		I
9	GND		H
24	GND		H
10	-40V		I
25	-40V		I
11	+5.2V		I
26	+5.2V		I
12	HYST 2	A6A11P1-8	G
27	HYST 1	A6A11P1-23	G
13	NC		
28	S AND H	A6A11P1-30	E
14	YTX COM	A6A7J2-8 AND A6A10P1-22	G
29	YTX COM		G
15	YTX SENSE	A6A10P1-21	G
30	YTX DRIVE	A6A7J2-14	G

Ⓐ INPUT AMPLIFIER

Ⓑ DELAY COMPENSATION

Ⓒ BAND SWITCH

Ⓔ SAMPLE AND HOLD

Ⓕ IF OFFSETS

Ⓖ YTX DRIVE

Ⓗ SWEEP + TUNE

Ⓘ POWER SUPPLIES

Ⓙ +9V AND -9V REFERENCE SUPPLIES

P/O A6A7 YTX CURRENT DRIVE

NOTES:

1. REFERENCE DESIGNATORS WITHIN THIS ASSEMBLY ARE ABBREVIATED. FOR COMPLETE REFERENCE DESIGNATION, PREFIX ABBREVIATION WITH ASSEMBLY DESIGNATION.
2. UNLESS OTHERWISE INDICATED: RESISTANCE IS IN OHMS (Ω). CAPACITANCE IS IN MICROFARADS (μF) INDUCTANCE IS IN MICROHENRIES (μH)
3. UNLESS OTHERWISE INDICATED: SIGNALS ENTER AT LEFT SIDE AND EXIT AT RIGHT SIDE OF FUNCTION BLOCKS.
4. C1*, C2*, C11*, AND C23* ARE FACTORY-SELECTED COMPONENTS. SOME OF THESE CAPACITORS MAY NOT BE USED IN THE CIRCUIT TO ACHIEVE PROPER DELAY COMPENSATION. IF THESE CAPACITORS ARE USED IN THE CIRCUIT, THE FOLLOWING HP PART NUMBERS AND VALUES MAY BE USED.

HP PART NUMBER	VALUE
0180-1743	0.10μF
0180-0218	0.15μF
0180-1735	0.22μF
0180-2205	0.33μF
0180-4441	0.47μF
0180-0373	0.68μF

5. C3* IS USED ONLY IN THE 8566A. IT IS NOT USED IN THE 8568.
6. R64* IS A FACTORY-SELECTED COMPONENT. THE FOLLOWING ALTERNATE HP PART NUMBER AND VALUE MAY BE USED.

HP PART NUMBER	VALUE
0698-8079	13.356K Ω

7. SHIELD OF CABLE A2 W3 IS ISOLATED FROM CHASSIS GROUND AT RF SECTION REAR PANEL.

A6A12

A6A12 YTX DRIVER, SCHEMATIC DIAGRAM

A6A12 YIG-TUNED MIXER (YTX) DRIVER
85660-60235
(SERIAL PREFIXES: 2503A-2928A)

P1

PIN	SIGNAL	TO/FROM	FUNCTION BLOCK
1	NC		
16	−.525V/GHz	A6A11P1-2	E
2	BAND C	A6A11P1-31	C
17	BAND B	A6A11P1-29	C
3	BAND E	A6A11P1-32	C
18	BAND D	A6A11P1-9	C
4	−9V	A6A11P1-1 AND A6A9P1-19	D
19	+9V	A6A11P1-33 AND A6A9P1-33	D
5	NC		
20	YTX PEAKING	A6A11P1-44	F
6	NC		
21	PIN	A6A10P1-35	C
7	+20V		I
22	+20V		I
8	−10V		I
23	−10V		I
9	GND		H
24	GND		H
10	−40V		I
25	−40V		I
11	+5.2V		I
26	+5.2V		I
12	HYST 2	A6A11P1-8	G
27	HYST 1	A6A11P1-23	G
13	NC		
28	S AND H	A6A11P1-30	E
14	YTX COM	A6A7J2-5 AND A6A10P1-22	G
29	YTX COM		G
15	YTX SENSE	A6A10P1-21	G
30	YTX DRIVE	A6A7J2-14	G

Ⓐ INPUT AMPLIFIER −3V/GHz

Ⓑ DELAY COMPENSATION

Ⓒ BAND SWITCH

Ⓔ SAMPLE AND HOLD

Ⓕ IF OFFSETS

Ⓖ +9V AND −9V REFERENCE SUPPLIES

Ⓘ POWER SUPPLIES

Ⓗ SWEEP + TUNE

Ⓒ YTX DRIVE

P/O A6A7 YTX CURRENT DRIVE

NOTES:

1. REFERENCE DESIGNATORS WITHIN THIS ASSEMBLY ARE ABBREVIATED. FOR COMPLETE REFERENCE DESIGNATION, PREFIX ABBREVIATION WITH ASSEMBLY DESIGNATION.
2. UNLESS OTHERWISE INDICATED: RESISTANCE IS IN OHMS (Ω) CAPACITANCE IS IN MICROFARADS(μF) INDUCTANCE IS IN MICROHENRIES(μH)
3. UNLESS OTHERWISE INDICATED: SIGNALS ENTER AT LEFT SIDE AND EXIT AT RIGHT SIDE OF FUNCTION BLOCKS.
4. C1*, C2*, C11*, AND C23* ARE FACTORY-SELECTED COMPONENTS. SOME OF THESE CAPACITORS MAY NOT BE USED IN THE CIRCUIT TO ACHIEVE PROPER DELAY COMPENSATION. IF THESE CAPACITORS ARE USED IN THE CIRCUIT, THE FOLLOWING HP PART NUMBERS AND VALUES MAY BE USED:

HP PART NUMBER	VALUE
0180-1743	0.10uF
0180-0218	0.15uF
0180-1735	0.22uF
0180-2205	0.33uF
0180-4441	0.47uF
0180-0373	0.68uF

5. C3* IS USED ONLY IN THE 8566A. IT IS NOT USED IN THE 8568B.
6. R64* IS A FACTORY-SELECTED COMPONENT. THE FOLLOWING ALTERNATE HP PART NUMBER AND VALUE MAY BE USED.

HP PART NUMBER	VALUE
0698-8079	13.356K Ω

7. SHIELD OF CABLE W2 W3 IS ISOLATED FROM CHASSIS GROUND AT RF SECTION REAR PANEL.

A6A12

A6A12 YTX DRIVER, SCHEMATIC DIAGRAM

HP Part Number 85660-60014

A6A13 RF Module Motherboard

Reference Designation	HP Part Number	C. D	Qty	Description	Mfr Code	Mfr Part Number
A6A13	85660-60014	4	1	BOARD ASSEMBLY, RF MODULE MOTHERBOARD	28480	85660-60014
A6A13C1	0180-2216	6	1	CAP-FXD 350uF 16 V AL-ELCTLT	56289	30D357G016DH2-DSM
A6A13C2	0180-1997	8	1	CAP-FXD 20uF 150 V AL-ELCTLT	56289	30D206F150DH2-DSM
A6A13C3	0180-2144	9	1	CAP-FXD 200uF 25 V AL-ELCTLT	56289	30D207G025DH9-DSM
A6A13C4	0180-1819	3	1	CAP-FXD 100uF 50 V AL-ELCTLT	56289	30D107G050DH2-DSM
A6A13C5	0160-3879	7	1	CAPACITOR-FXD .01UF +-20% 100VDC CER	04222	SR201C103MAAH
A6A13C6	0180-0229	7	1	CAP-FXD 33uF 10 V TA	56289	150D336X9010B2-DYS
A6A13C7	0180-0141	2	1	CAP-FXD 50uF 50 V AL-ELCTLT	56289	30D506G050DD2-DSM
A6A13J1	1251-5550	9	1	CONN-POST TYPE .100-PIN-SPCG 26-CONT	18873	68025-626
A6A13J2	1251-5144	7	1	CDNN-POST TYPE .100-PIN-SPCG 13-CONT	00779	87502-6
A6A13J3	1251-5549	6	1	CONN-POST TYPE .100-PIN-SPCG 50-CONT	18873	68025-650
A6A13J4	1251-5145	8	1	CDNN-POST TYPE .100-PIN-SPCG 11-CONT	00779	87502-5
A6A13J5	1200-1204	F	1	SOCKET-IC 14-CDNT DIP DIP-SLDR	00779	2-641609-2
A6A13L1	08558-80011	6	1	INDUCTOR FILTER COIL BLUE 100UH	28480	08558-80011
A6A13L2	08558-80011	6	1	INDUCTOR FILTER COIL BLUE 100UH	28480	08558-80011
A6A13L3	08558-80011	6	1	INDUCTOR FILTER COIL BLUE 100UH	28480	08558-80011
A6A13L4	08558-80011	6	1	INDUCTOR FILTER COIL BLUE 100UH	28480	08558-80011
A6A13L5	9140-0144	C	1	INDUCTOR RF-CH-MLD 4.7UH +-10% .105D-INX	99800	1025-36
A6A13L6	08558-80011	6	1	INDUCTOR FILTER COIL BLUE 100UH	28480	08558-80011
A6A13MP1				NOT ASSIGNED		
A6A13R1	0757-0401	C	1	RESISTOR 100 +-1% .125W TF TC=O+-100	19701	SFR25H
A6A13VR1	1902-0049	2	1	DIODE-ZNR 6.19V 5% DO-35 PD=.4W	04713	
A6A13XA6A3	1251-2035	9	1	CONNECTOR-PC EDGE 15-CONT/ROW 2-ROWS	26742	220-624-03
A6A13XA6A9	1251-2035	9	1	CONNECTOR-PC EDGE 15-CONT/ROW E-ROWS	26742	220-624-03
A6A13XA6A10	1251-1365	6	1	CONNECTOR-PC EDGE 22-CONT/ROW 2-ROWS	26742	220-626-03
A6A13XA6A11	1251-1365	6	1	CONNECTOR-PC EDGE 22-CONT/ROW 2-ROWS	26742	220-626-03
A6A13XA6A12	1251-2035	9	1	CONNECTOR-PC EDGE 15-CONT/ROW 2-ROWS	26742	220-624-03

**Indicates factory-selected value*

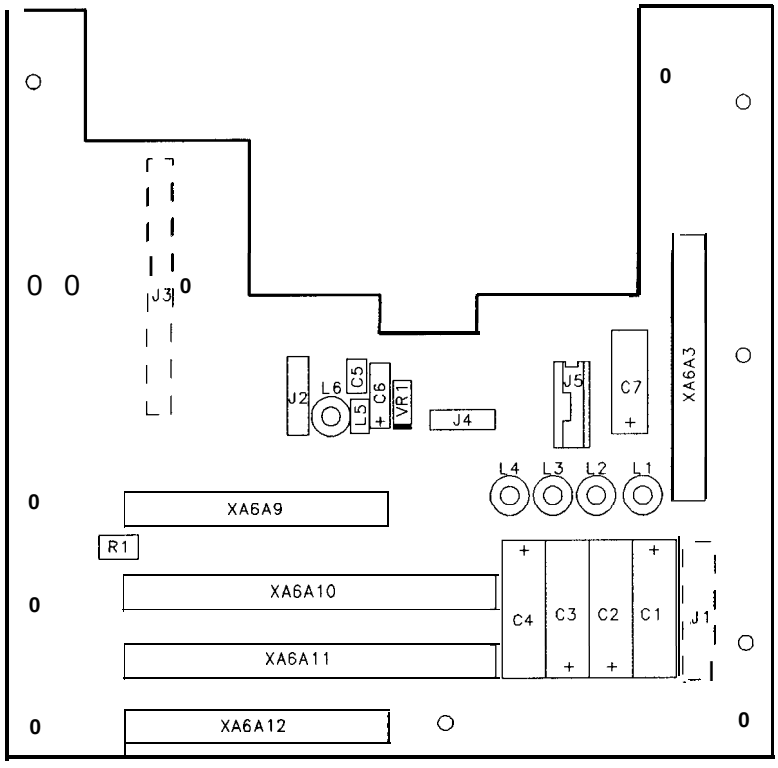

A6A13 RF Module Motherboard Component Locations, 85660-60014

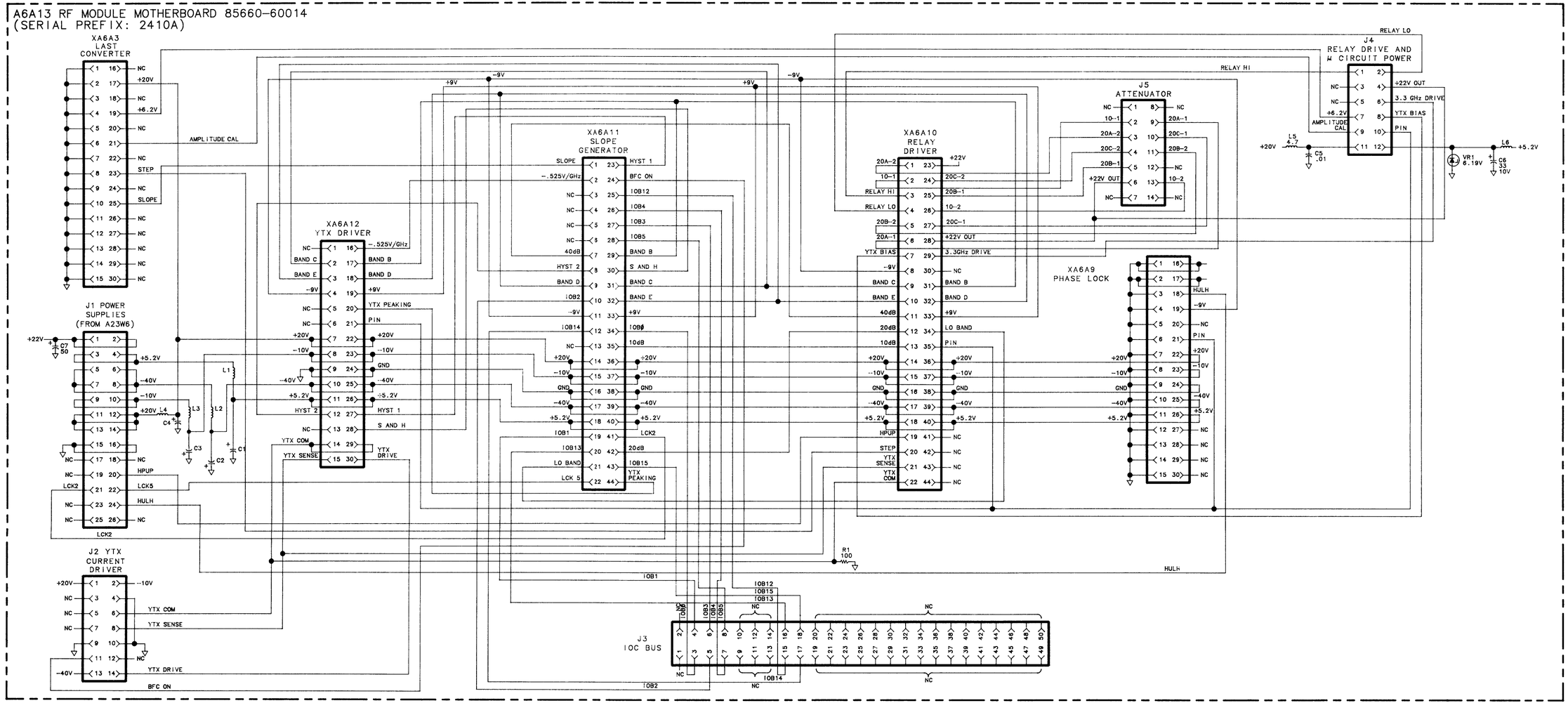

NOTES:

1. REFERENCE DESIGNATORS WITHIN THIS ASSEMBLY ARE ABBREVIATED. FOR COMPLETE REFERENCE DESIGNATION,PREFIX ABBREVIATION WITH ASSEMBLY DESIGNATION.
2. UNLESS OTHERWISE INDICATED: RESISTANCE IS IN OHMS (Ω) CAPACITANCE IS IN MICROFARADS(μF) INDUCTANCE IS IN MICROHENRIES(μH)

A6A13

A6A13 RF MODULE MOTHERBOARD, INTERCONNECT DIAGRAM

A7

A7 M/N Reference, Troubleshooting

Reference

All phase lock loops in the HP 8566B are referenced to the A22 10 MHz Frequency Standard. The 10 MHz Frequency Standard is used to directly phase-lock the A7A2 100 MHz VCXO only. All other phase lock loops receive their reference from either the A7A1 or A7A2 (10 and 20 MHz from the A7A1 and 100 and 400 MHz from the A7A2).

A malfunction of the 100 MHz VCXO is indicated by all phase lock error messages (PL1 UNLOCK, PL2 UNLOCK, **REFUNLOCK, YTO UNLOCK,** M/N UNLOCK, and **HETUNLOCK)** being displayed on the HP 8566B CRT. Table 1 lists the phase lock error messages, related reference, location for measurement, and signal level.

Table 1. Phase Lock Error Messages

Phase Lock Error Message	Reference Frequency	output Connector	Level (dBm)
PL1 UNLOCK	100 MHz	A7A2J3	0
PL1 UNLOCK	10 MHz	A7A1J4	0
PL2 UNLOCK	10 MHz	A7A1J5	0
YTO UNLOCK and M/N UNLOCK	400 MHz	A7A2J1*	- 1 0
YTO UNLOCK and M/N UNLOCK	20 MHz	A7A1J3	0
HET UNLOCK	100 MHz	A7A2J4	0
All Flags	100 MHz	A7A2J2	0
* Measure output at end of A7A2W1 96 cable.			

M/N Loop

The M/N Loop consists of a 355 to 395 MHz VCO, part of A7A4, and a phase detector, part of A7A3. The output of the VCO is divided by two and is used to drive the A11A5 Sampler assembly. This divided signal is disabled by means of control line LMNE during sweeps when the frequency span is greater than 5 MHz (fundamental mixing). The two divider numbers, M and N, are selected by the Al5 Controller such that the Nth harmonic (same as the N divide number) of the divided VCO output changes in exactly 10 MHz increments as M is changed.

For example:

If M = 26,
N = 20,
and VCO Frequency = 187.0 MHz,
then M/N output frequency = N (VCO) = 20 x 187.0 = 3,740 MHz.

If M is changed to 25,
then the VCO frequency changes to 187.5 MHz,
and the M/N output frequency changes to 3,750 MHz (20 x 187.5).

Result = 10 MHz change for M divider change of 1.

An incorrect M or N number, due to the main controller or a bad latch on A7A3, can be easily detected. The frequency diagnostic (SHIFT) MKR→ REF LVL gives the M and N numbers and the M/N output frequency (VCO divided by two) for the start frequency selected. A frequency counter attached to A7A4J2 indicates the actual frequency output. Table 2, "M and N Numbers and Resulting Frequencies," of the RF Section Analog Troubleshooting tab, lists all possible M/N output frequencies. By locating the M/N frequency measured by the counter, the M and N numbers required to produce this frequency are obtained. The M and N numbers can then be compared to those shown in the frequency diagnostic. The latch and divider for the number in error can then be located using the troubleshooting procedure outline for A7A3.

A7 M/N Reference Replacement

Note For location of hardware and cables referred to in this procedure, see Figure 1.



Removal

1. Remove ac line cords, IF-Display Section, and RF Section top and bottom covers.
2. Remove the following cables from A7 M/N Reference:

   80 (gray/black) cable (A7A1J1, STD IN) ①

   86 (gray/blue) cable (A7A1JR, 10 MHz OUT) ②

   9 (white) cable (A7A1J5, 10 MHz OUT) ③

   85 (gray/green) cable (A7A2J4, 100 MHz OUT) ④

   8 (gray) cable (A7A2J3, 100 MHz OUT) ⑤

   93 (white/orange) cable (A7A4J2, M/N OUT) ⑥

   6 (blue) cable (A7A1J6, 10 MHz OUT) ⑦

3. Remove clear plastic shield from motherboard (Figure 1) by removing all screws. Remove eight screws ⑧ from the motherboard.

Note Screws are marked on motherboard with the letter B for easy identification.

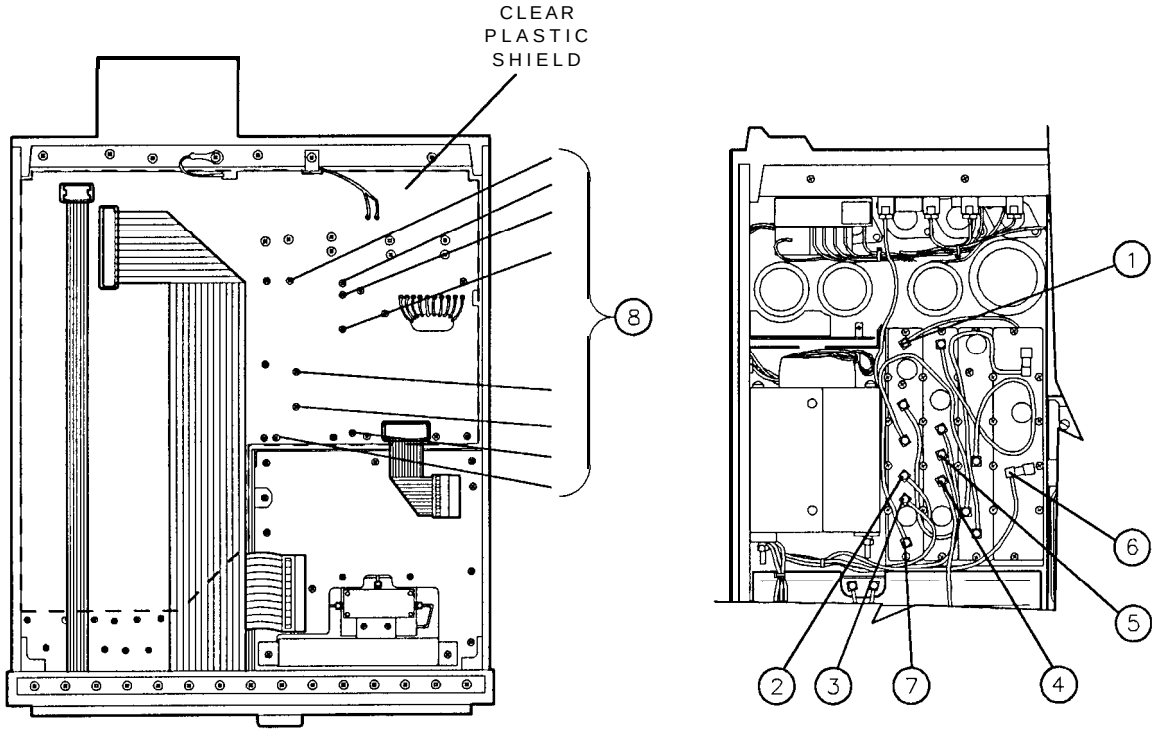

Figure 1. A7 M/N Reference Removal and Installation

4. Position A7 section in RF Section and secure with eight screws ⑧. Replace clear plastic shield over motherboard. Reconnect cables removed in step 2.
5. Replace RF Section top and bottom covers. Reassemble IF-Display Section to RF Section. Reconnect ac line cords.

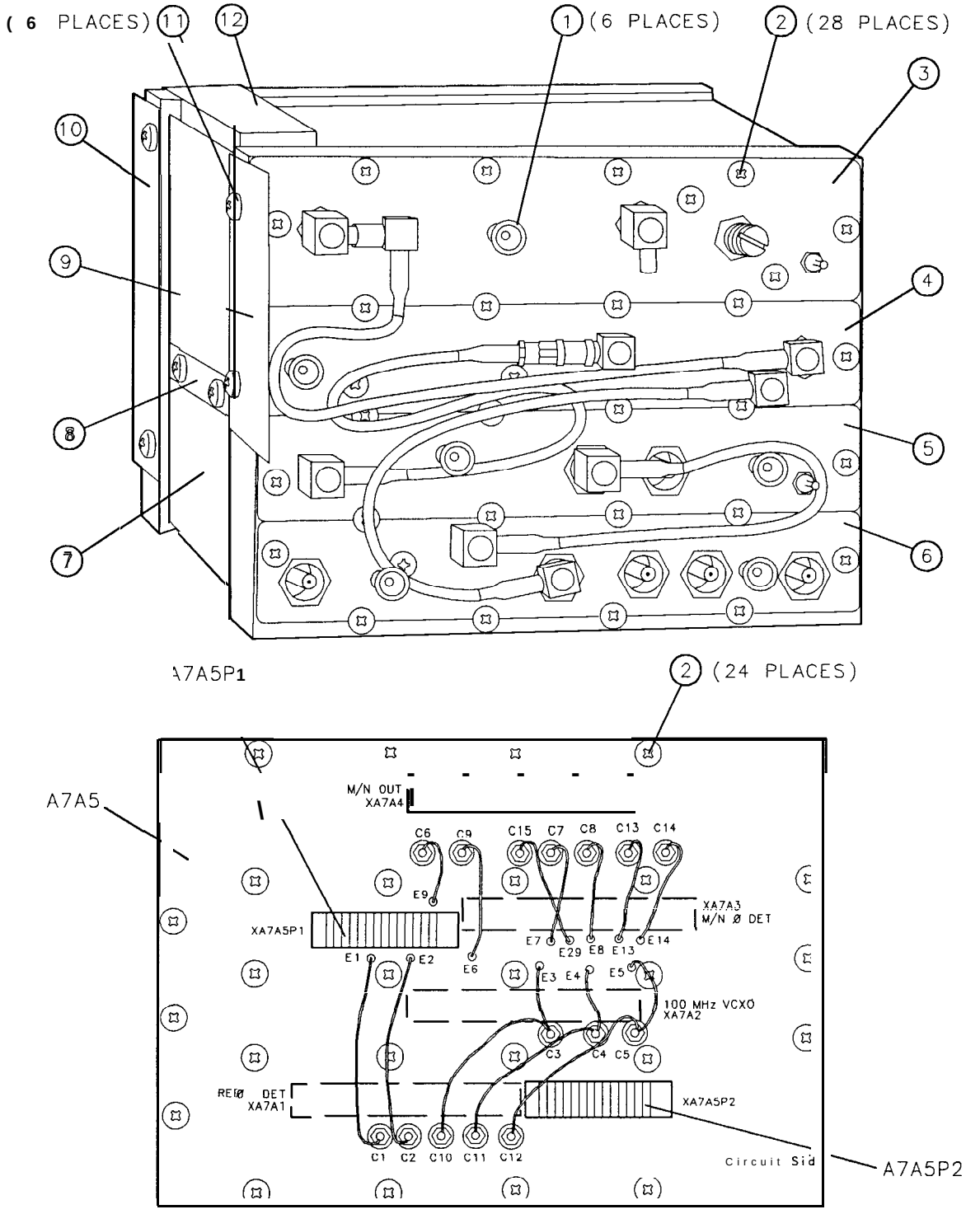

Figure 2. A7 M/N Reference, Parts Identification (1 of 2)

Item	HP Part Number	CD	Description	Mfr Code	Mfr Part Number
1	86701-40001	9	EXTRACTOR, PC BOARD	48280	86701-40001
2	2200-0105	4	SCREW, MACH, 4-40, .312-IN LG, PAN HD	28480	2200-0105
3	85660-20049	1	COVER, PC BOARD (A7A4 M/N OUTPUT)	28480	85660-20049
4	85660-20047	9	COVER, PC BOARD (A7A3 M/N 0 DET)	28480	85660-20047
5	85660-20046	8	COVER, PC BOARD (A7A2 100 MHz VCXO)	28480	85660-20046
6	85660-20045	7	COVER, PC BOARD, (A7A1 REF 0 DET)	28480	85660-20045
7	5021-3208	7	HOUSING, M/N-REFERENCE BLOCK	22480	5021-3208
8	86701-00024	2	AIR SCOOP	28480	86701-00024
9	86701-00029	7	AUR BAFFLE, TOP	28480	86701-00029
10	86701-00030	0	AIR BAFFLE, BOTTOM	28480	86701-00030
11	2200-0103	2	SCREW, MACH, 4-40, .25-IN LG, PAN HD	28480	2200-0103
12	0460-0778	5	TAPE, ADHESIVE, FOAM CUSHION (4-IN)	28480	0460-0778

Figure 2. A7 M/N Reference, Parts Identification (2 of 2)

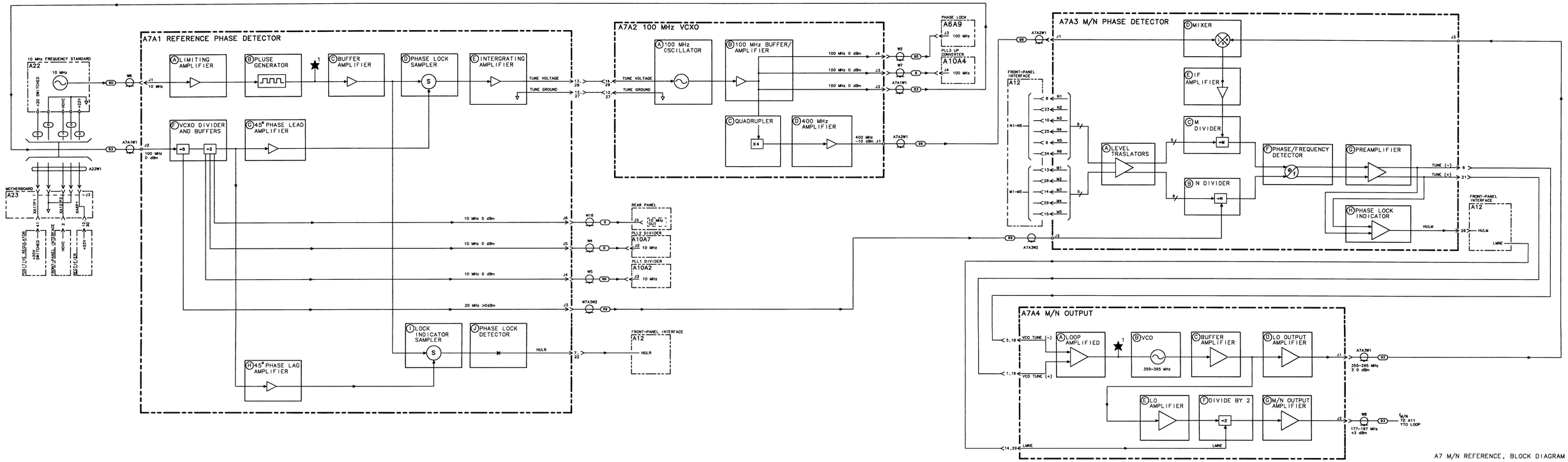

A7 M/N REFERENCE, BLOCK DIAGRAM

A7A1

A7A1 Reference Phase Detector, Circuit Description

The A7A1 Reference Phase Detector contains the frequency divider, phase detector, and integrating amplifier for the 100 MHz Reference phase-lock loop. Basically, 100 MHz from the A7A2 VCXO is divided by 10 and compared to the 10 MHz frequency reference by the phase detector. The error voltage from this comparison is fed back to the VCXO to keep its frequency locked to 10 times that of the frequency reference. The bandwidth of the reference phase-lock loop is 100 Hz; the 10 MHz derived from the 100 MHz VCXO must be within 100 Hz of the 10 MHz frequency reference for the loop to lock reliably.

Limiting Amplifier Ⓐ

U1 amplifies and limits the amplitude of the reference signal from the rear panel FREQ REFERENCE input. For proper operation of the 100 MHz Reference phase-lock loop, this signal should be 5 MHz ±25 Hz or 10 MHz ±50 Hz at a power level of 0 dBm to +10 dBm. The internal A22A2 10 MHz Quartz Crystal Oscillator provides a stable, high spectral purity 10 MHz frequency reference at a power level of at least +7 dBm at the rear panel FREQ REFERENCE output. A short BNC jumper cable is normally connected between the FREQ REFERENCE input and output jacks to route the internal frequency reference signal to the 100 MHz Reference phase-lock loop. The spectral purity of the FREQ REFERENCE input signal directly affects the instrument phase noise performance. The internal frequency reference remains off during instrument warmup (from a cold start) until it reaches thermal equilibrium.

Pulse Generator Ⓑ

U2D is biased with feedback resistor R10 to further limit the 10 MHz to a well-shaped square wave and set the proper logic levels for digital buffer U2C. U2A and U2B generate narrow pulses, the width being the gate delay of U2A plus the delay from R11 and C5. When the output of U2C goes low, the output of U2B goes high after one gate delay (of U2B). After a delay due to R11, C5 and U2A gate delay, the output of U2A goes high which causes U2B output to return low again, thus generating a narrow pulse.

Phase Lock Sampler Ⓓ

The phase lock sampler performs the function of phase detector. The 10 MHz pulses from the buffer amplifier are applied to the primary of T1 which causes CR3 and CR4 to turn on for the duration of the pulses. This samples the divided by 10 VCXO frequency and stores this voltage on C36. When the loop is locked, the feedback due to the complete phase-lock loop forces this voltage to be nearly zero. When the loop is unlocked, this voltage may be zero or varying, depending on the reason for unlock.

Integrating Amplifier Ⓔ

Q4 is a differential input pair which together with Q5 and Q6 forms a high gain amplifier. Feedback is added with C32 and R49 to make an integrating amplifier. C32 provides ac feedback only, so for the amplifier to remain linear, dc feedback is accomplished by virtue of the entire phase-lock loop.

VCXO Divider and Buffers Ⓕ

100 MHz from the A7A2 VXCO is applied to the counter U3 which divides by 5, then by 2. Its outputs are 10 MHz and 20 MHz which are buffered by U4 to be used as reference frequencies by other assemblies in the instrument. The other 10 MHz output is used to drive the Phase Lock Sampler Ⓓ and Lock Indicator Sampler Ⓘ.

45° Phase Lead and Buffer Amplifier Ⓖ and 45° Phase Lag and Buffer Amplifier Ⓗ

The 45° phase shift buffers are used to provide two 10 MHz signals which are 90" apart in phase, the purpose of which is explained in Lock Indicator Sampler description. 45" phase shift in Ⓖ is accomplished with C35 and R53, while in Ⓗ it is done by R59 and C38.

Lock Indicator Sampler Ⓘ

The lock indicator sampler functions the same as the phase lock sampler Ⓓ. The only difference is that the 10 MHz is 90" shifted in phase. This causes the output of the lock indicator sampler to be maximum negative voltage when the loop is locked, since in this state the output of the phase-lock sampler is 0 V.

Phase Lock Detector Ⓙ

The output of the lock indicator sampler is compared to -0.5 V by U5. When the output voltage becomes closer to 0 than to -0.5 V, U5 switches its output to TTL high to indicate to the Al5 Controller that the 100 mHz Reference phase-lock loop is unlocked.

During instrument warmup, the A22A2 10 MHz Quartz Crystal Oscillator remains off for a few minutes until thermal equilibrium is reached. It is normal for both an **OVEN COLD** and **REF UNLOCK** indication to appear on the CRT during these first few minutes of instrument operation after a cold start.

A7A1 Reference Phase Detector, Troubleshooting

The A7A1 Reference Phase Detector compares the output of the 10 MHz Frequency Standard to the output of the A7A2 100 MHz VCXO and provides the tuning drive voltage for the VCXO. A phase lock detector in A7A1 indicates to the main processor (A15) the state of the Reference Phase Lock Loop.

Samplers Ⓓ, Ⓘ

The Phase Lock and Lock Indicator Samplers are identical. The diodes are biased to approximately the same level in each. The dc bias on the diodes is as shown in Table 1.

Table 1. Sampler Diode Bias Voltage Levels

Diode	dc Bias
CR3 Anode	+1.87
CR4 Cathode	−1.92
CR5 Cathode	−1.92
CR6 Anode	+1.82

The Phase Lock Sampler output (junction of R32 and R34) is 0.0 V when locked or with no 10 MHz reference, and approximately +0.1 V with no 100 MHz input. The Lock Indicator output (junction of R25 and R23) is -1.5 V when locked, 0.0 V with no 10 MHz reference, and approximately +0.2 V with no 100 MHz input.

45° Phase Lead Amplifier Ⓖ and 45° Phase Lag Amplifier Ⓗ

The Phase Amplifiers shift the 100 MHz VCXO signal, which has been divided by 10 by U3, +45° and -45" respectively. Figure 1 is typical of the waveforms at the collectors of Q1 and Q2. The dc voltages for Q1 and Q2 are as shown in Table 2. The waveform of Q1 leads the waveform of Q2 by approximately 20 nanoseconds in Figure 1.

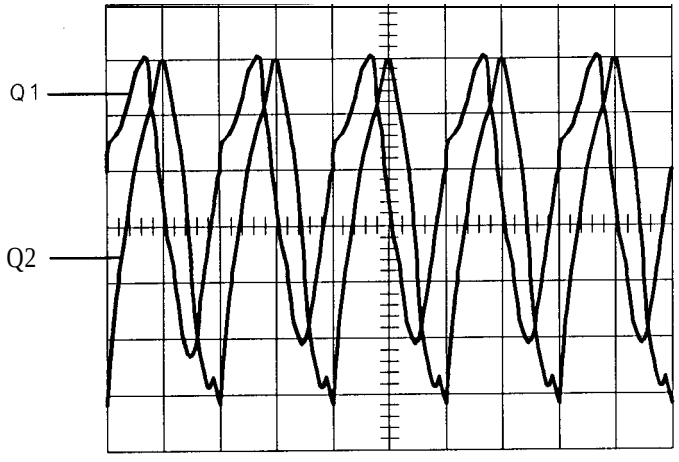

Figure 1. Outputs of **45°** Phase Amplifiers

Oscilloscope Settings

Vertical 0.05 V/Div AC

Horizontal 0.05 μs/Div

Probe 10:1

Analyzer Settings

INSTR PRESET

Table 2. Phase Amplifier Voltage Levels

	Voltage Levels	
	Q1	**Q2**
Emitter	-8.0	-8.0
Base	-7.4	-7.4
Collector	-3.6	-3.6

Limiting Amplifier Ⓐ

The Limiting Amplifier shapes and amplifies the 10 MHz reference from the Frequency Standard (A22). Typical voltage levels for U1 are shown in Table 3.

Table 3. Limiting Amplifier Voltage Levels

U1 Pin Number	dc Voltage Level
1	+5.0

Table 3. Limiting Amplifier Voltage Levels

U1 Pin Number	dc Voltage Level
1	+5.0
2	0.0
3	+0.5
4	0.0
5	+2.3
6	+2.3
7	+1.6
8	+5.0

Pulse Generator Ⓑ

Typical input/output waveforms for the Pulse Generator are shown in Figure 2 and Figure 3.

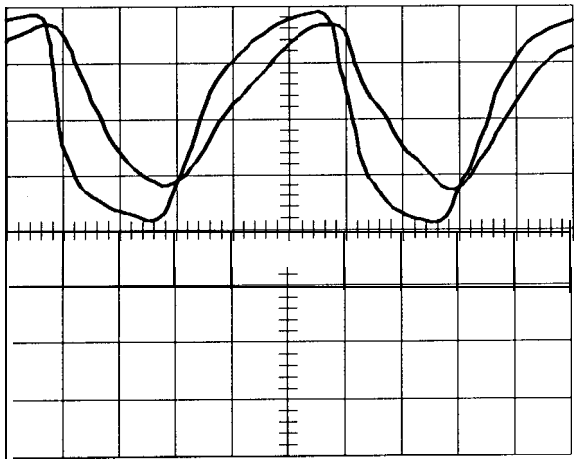

Figure 2. Pulse Generator Input Waveforms

Oscilloscope Settings

Vertical	0.1 V/Div
Horizontal	0.2 μs/Div
	X10 Magnifier
Probes	10:1
Channel A	U2B Pin 5
Channel B	U2A Pin 2

Analyzer Settings

INSTR PRESET

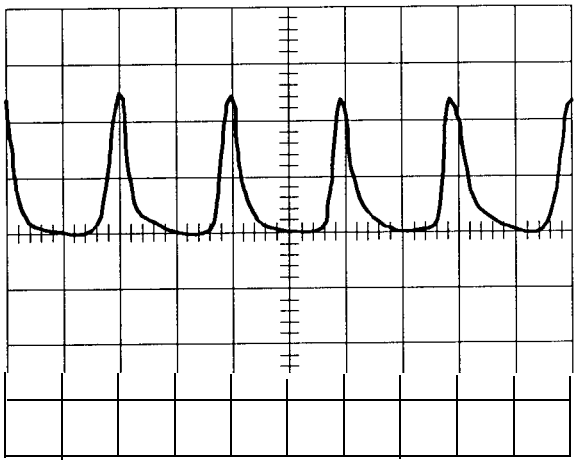

Figure 3. Pulse Generator Output Pulses

Oscilloscope Settings

Vertical	0.1 V/Div
Horizontal	0.05 μs/Div
Probe	10:1
Channel A	U2B Pin 4 (TP1)

Analyzer Settings

INSTR PRESET

Buffer Amplifier Ⓒ

Typical voltage levels for the Buffer Amplifier are shown in Table 4.

Table 4. Buffer Amplifier Voltage Levels

	Voltage Levels[1]	
	Q3	Q7
Emitter	-4.6	-4.6
Base	-4.5	-4.5
Collector	-0.3	-9.4

Integrating Amplifier Ⓔ

Typical voltage levels for the Integrating Amplifier are shown in Table 5.

Integrating Amplifier tune voltage output (junction of R75 and R51):

-8.6 V (locked)

-1.4 V (unlocked with no 100 MHz)

Note

The 100 MHz VCXO Tune Voltage can be measured at A7A2TP1. However, the voltage levels will be slightly lower than those listed above.

Table 5. Integrating Amplifier Voltage Levels

Transistors	de Voltage Levels
Q4A	
Pin 1	+0.18
Pin 2	+9.8
	0.0 (locked)
Pin 3	0.0 (no 10 MHz) Ref.
	+0.1 (no 100 MHz) VCXO
Q4B	
Pin 4	+0.18
Pin 5	+9.8
Pin 6	+o.o
25	
Emitter	+10.3
Base	+9.8
Collector	Gnd
Q6	
Emitter	+10.3
Base	+9.8
Collector	-6.6

Phase Lock Detector (J)

The output of the Lock Indicator Sampler is compared to a reference of -0.4 V by comparator U5. The output of U5 is high for any unlocked condition. VR1 limits the output voltage (HULR) to approximately 4.64 V.

This can be checked by disconnecting the 10 MHz input at A7A1J1 (gray/white cable) and measuring the output of U5. With the loop unlocked (10 MHz removed), this output should be approximately 4.64 V.

HP Part Number 85660-60015

A7A1 Reference Phase Detector

Reference Designation	HP Part Number	C D	Qty	Description	Mfr Code	Mfr Part Number
A7A1	85660-60015	5	1	BOARD ASSEMBLY, REFERENCE PHASE DETECTOR	28480	85660-60015
A7A1C1	0180-0197	8	1	CAPACITOR-FXD 2.2UF+-10% 20VDC TA	56289	150D225X9020A2-DYS
A7A1C2	0180-0197	8	1	CAPACITOR-FXD 2.2UF+-10% 20VDC TA	56289	150D225X9020A2-DYS
A7A1C3	0180-1746	5	1	CAPACITOR-FXD 15UF+-10% 20VDC TA	56289	150D156X9020B2-DYS
A7A1C4	0160-3879	7	1	CAPACITOR-FXD .01UF +-20% 100VDC CER	04222	SR201C103MAAH
A7A1C5	0140-0190	7	1	CAPACITOR-FXD 39PF +-5% 300VDC MICA	09023	CD15ED390J03
A7A1C6	0160-3879	7	1	CAPACITOR-FXD .01UF +-20% 100VDC CER	04222	SR201C103MAAH
A7A1C7	0160-2055	9	1	CAPACITOR-FXD .01UF +80-20% 100VDC CER		805-504 Y5V 1032
A7A1C8	0180-3073	5	1	CAP-FXD 2.2uF 30 V TA	56289	152D225X0030A2
A7A1C9	0160-3879	7	1	CAPACITOR-FXD .01UF +-20% 100VDC CER	04222	SR201C103MAAH
A7A1C10	0160-2055	9	1	CAPACITOR-FXD .01UF +80-20% IOOVDC CER		805-504 Y5V 1032
A7A1C11	0180-0197	8	1	CAPACITOR-FXD 2.2UF+-10% 20VDC TA	56289	150D225X9020A2-DYS
A7A1C12	0160-2199	2	1	CAPACITOR-FXD 30PF +-5% 300VDC MICA	09023	CD15ED300J03
A7A1C13	0180-0197	8	1	CAPACITOR-FXD 2.2UF+-10% 20VDC TA	56289	150D225X9020A2-DYS
A7A1C14	0160-2204	0	1	CAPACITOR-FXD 100PF +-5% 300VDC MICA	09023	CD15FD101J03
A7A1C15	0180-0197	8	1	CAPACITOR-FXD 2.2UF+-10% 20VDC TA	56289	150D225X9020A2-DYS
A7A1C16	0160-2055	9	1	CAPACITOR-FXD .01UF +80-20% 100VDC CER		805-504 Y5V 1032
A7A1C17	0160-2055	9	1	CAPACITOR-FXD .01UF +80-20% IOOVDC CER		805-504 Y5V 1032
A7A1C18	0160-2055	9	1	CAPACITOR-FXD .01UF +80-20% 100VDC CER		805-504 Y5V 1032
A7A1C19	0160-2055	9	1	CAPACITOR-FXD .01UF +80-20% 100VDC CER		805-504 Y5V 1032
A7A1C20	0160-2055	9	1	CAPACITOR-FXD .01UF +80-20% 100VDC CER		805-504 Y5V 1032
A7A1C21	0160-2055	9	1	CAPACITOR-FXD .01UF +80-20% 100VDC CER		805-504 Y5V 1032
A7A1C22	0160-2055	9	1	CAPACITOR-FXD .01UF +80-20% 100VDC CER		805-504 Y5V 1032
A7A1C23	0180-0553	0	1	CAPACITOR-FXD 22UF+-20% 25VDC TA	56289	199D1117
A7A1C24	0160-2055	9	1	CAPACITOR-FXD .01UF +80-20% 100VDC CER		805-504 Y5V 1032
A7A1C25	0160-2055	9	1	CAPACITOR-FXD .01UF +80-20% 100VDC CER		805-504 Y5V 1032
A7A1C26	0160-2204	0	1	CAPACITOR-FXD 100PF +-5% 300VDC MICA	09023	CD15FD101J03
A7A1C27	0140-0193	0	1	CAPACITOR-FXD 82PF +-5% 300VDC MICA	09023	CD15ED820J03
A7A1C28	0180-0553	0	1	CAPACITOR-FXD 22UF+-20% 25VDC TA	56289	19901117
A7A1C29	0160-2055	9	1	CAPACITOR-FXD .01UF +80-20% 100VDC CER		805-504 Y5V 1032
A7A1C30	0140-0193	0	1	CAPACITOR-FXD 82PF +-5% 300VDC MICA	09023	CD15ED820J03
A7A1C31	0180-1746	5	1	CAPACITOR-FXD 15UF+-10% 20VDC TA	56289	150D156X9020B2-DYS
A7A1C32	0170-0066	9	1	CAP-FXD 0.027uF 200 V POLYE-FL	84411	HEW-238M
A7A1C33	0160-2055	9	1	CAPACITOR-FXD .01UF +80-20% 100VDC CER		805-504 Y5V 1032
A7A1C34	0160-2055	9	1	CAPACITOR-FXD .01UF +80-20% 100VDC CER		805-504 Y5V 1032
A7A1C35	0140-0193	0	1	CAPACITOR-FXD 82PF +-5% 300VDC MICA	09023	CD15ED820J03
A7A1C36	0160-2055	9	1	CAPACITOR-FXD .01UF +80-20% 100VDC CER		805-504 Y5V 1032
A7A1C37	0160-2055	9	1	CAPACITOR-FXD .01UF +80-20% 100VDC CER		805-504 Y5V 1032
A7A1C38	0140-0193	0	1	CAPACITOR-FXD 82PF +-5% 300VDC MICA	09023	CD15ED820J03
A7A1C39	0160-3879	7	1	CAPACITOR-FXD .01UF +-20% 100VDC CER	04222	SR201C103MAAH
A7A1C40	1180-1746	5	1	CAPACITOR-FXD 15UF+-10% 20VDC TA	56289	150D156X9020B2-DYS
A7A1C41	0160-2055	9	1	CAPACITOR-FXD .01UF +80-20% 100VDC CER		805-504 Y5V 1032
A7A1C42	0160-2055	9	1	CAPACITOR-FXD .01UF +80-20% 100VDC CER		805-504 Y5V 1032
A7A1C43	0160-2206	2	1	CAPACITOR-FXD 160PF +-5% 300VDC MICA	09023	CD15FD161J03
A7A1C44	1160-2055	9	1	CAPACITOR-FXD .01UF +80-20% 100VDC CER		805-504 Y5V 1032
A7A1C45	0160-2055	9	1	CAPACITOR-FXD .01UF +80-20% 100VDC CER		805-504 Y5V 1032
A7A1C46	0140-0210	2	1	CAPACITOR-FXD 270PF +-5% 300VDC MICA	09023	CD15FD271J03

**Indicates factory-selected value*

HP Part Number 85660-60015

A7A1 Reference Phase Detector

Reference Designation	HP Part Number	C D	Qty	Description	Mfr Code	Mfr Part Number
A7A1C47	0160-2055	9	1	CAPACITOR-FXO .01UF +80-20% 100VDC CER		805-504 Y5V 1032
A7A1C48	0140-0210	2	1	CAPACITOR-FXD 270PF +-5% 300VDC MICA	09023	CD15FD271J03
A7A1C49	0160-2201	7	1	CAPACITOR-FXD 51PF +-5% 300VDC MICA	09023	CD15ED510J03
A7A1C50	0160-2055	9	1	CAPACITOR-FXD .01UF +80-20% 100VDC CER		805-504 Y5V 1032
A7A1C51	0140-0210	2	1	CAPACITOR-FXD 270PF +-5% 300VDC MICA	09023	CD15FD271J03
A7A1C52	0160-2055	9	1	CAPACITOR-FXD .01UF +80-20% 100VDC CER		805-504 Y5V 1032
A7A1C53	0160-2055	9	1	CAPACITOR-FXD .01UF +80-20% 100VDC CER		805-504 Y5V 103Z
A7A1C54	0180-0183	2	1	CAP-FXD 10uF 50 V AL-ELCTLT	562E19	30D106G050CB2-DSM
A7A1C55	0180-1746	F	1	CAPACITOR-FXD 15UF+-10% 20VDC TA	562B9	150D156X9020B2-DYS
A7A1C56	0180-0229	7	1	CAP-FXD 33uF 10 V TA	56289	150D336X9010B2-DYS
A7A1C57	0160-2204	0	1	CAPACITOR-FXD 100PF +-5% 300VDC MICA	0902'3	CD15FD101J03
A7A1C58	0160-3879	7	1	CAPACITOR-FXD .01UF +-20% 100VDC CER	0422'2	SR201C103MAAH
A7A1C59	0160-3878	6	1	CAP-FXD 1000pF 100 V	0422'2	SR201C102MAAH
A7A1C60	0160-3879	7	1	CAPACITOR-FXD .01UF +-20% 100VDC CER	0422'2	SR201C103MAAH
A7A1C61	0160-3454	4	1	CAPACITOR-FXD 220PF +-lo% 1KVDC CER		838-546 X5E 221K
A7A1C62	0160-3878	6	1	CAP-FXD 1000pF 100 V	0422'2	SR201C102MAAH
A7A1CR1	1901-0518	a	1	DIODE-SCHOTTKY SM SIG		5082-2800
A7A1CR2	1901-0518	a	1	DIODE-SCHOTTKY SM SIG		5082-2800
A7A1CR3	1901-0518	a	1	DIODE-SCHOTTKY SM SIG		5082-2800
A7A1CR4	1901-0518	a	1	DIODE-SCHOTTKY SM SIG		5082-2800
A7A1CR5	1901-0518	a	1	DIODE-SCHOTTKY SM SIG		5082-2800
A7A1CR6	1901-0518	a	1	DIODE-SCHOTTKY SM SIG		5082-2800
A7A1J1	1250-0544	9	1	CONNECTOR-RF SM-SNP M SGL-HOLE-FR 50-OHM	98291	051-049-0000-220
A7A1J3	1250-0544	9	1	CONNECTOR-RF SM-SNP M SGL-HOLE-FR 50-OHM	98291	051-049-0000-220
A7A1J4	1250-0544	9	1	CONNECTOR-RF SM-SNP M SGL-HOLE-FR 50-OHM	98291	051-049-0000-220
A7A1J5	1250-0544	9	1	CONNECTOR-RF SM-SNP M SGL-HOLE-FR 50-OHM	98291	051-049-0000-220
A7A1J6	1250-0544	9	1	CONNECTOR-RF SM-SNP M SGL-HOLE-FR 50-OHM	98291	051-049-0000-220
A7A1L1	9140-0238	3	1	INDUCTOR RF-CH-MLD 82UH +-5% .166D-INX.3	99800	1537-72
A7A1L2	3140-0238	3	1	INDUCTOR RF-CH-MLD 82UH +-5% .166D-INX.3	99800	1537-72
A7A1L3	9140-0143	9	1	INDUCTOR RF-CH-MLD 3.3UH +-10% .105D-INX	99800	1025-32
A7A1L4	9140-0143	9	1	INDUCTOR RF-CH-MLD 3.3UH +-lo% .105D-INX	99800	1025-32
A7A1L5	9100-2261	2	1	INDUCTOR RF-CH-MLD 2.7UH +-lo% .105D-INX	99800	1025-30
A7A1L6	3140-0114	4	1	INDUCTOR RF-CH-MLD 10UH +-10% .166D-INX.	99800	1537-36
A7A1L7	9100-2255	4	1	INDUCTOR RF-CH-MLD 470NH +-lo% .105D-INX	24226	10M470K
A7A1L8	9100-0368	6	1	INDUCTOR RF-CH-MLD 330NH +-lo% .105D-INX	32159	1A-3303M +-10%
A7A1L9	9100-2257	6	1	INDUCTOR RF-CH-MLD 820NH +-10% .105D-INX	32159	1A 8203M +-lo%
A7A1L10	9100-2255	4	1	INDUCTOR RF-CH-MLD 470NH +-10% .105D-INX	24226	10M470K
A7A1L11	9100-2257	6	1	INDUCTOR RF-CH-MLD 820NH +-10% .105D-INX	32159	1A 8203M +-lo%
A7A1L12	9100-2255	4	1	INDUCTOR RF-CH-MLD 470NH +-10% .105D-INX	24226	10M470K
A7A1L13	9100-2257	6	1	INDUCTOR RF-CH-MLD 820NH +-10% .105D-INX	3215'9	1A 8203M +-lo%
A7A1L14	9100-2255	4	1	INDUCTOR RF-CH-MLD 470NH +-10% .105D-INX	24226	10M470K
A7A1L15	9100-2256	5	1	INDUCTOR RF-CH-MLD 560NH +-10% .105D-INX	24226	10M560K
A7A1L16	9100-2891	4	1	INDUCTOR RF-CH-MLD 50NH +-lo% .105D-INX.	24226	10M050K-1
A7A1MP1				NOT ASSIGNED		
A7A1MP2	.205-0250	3	1	THERMAL LINK SGL TO-5/TO-39-CS	05820	2604 TH 5E
A7A1MP3	2190-0124	4	1	WASHER-LK INTL T NO. 10 .195-IN-ID	98291	3002-26
A7A1MP4	1200-0101	3	1	SCREW-MACH 4-40 .188-IN-LG PAN-HD-POZI	77250	
A7A1MP5	'950-0078	3	1	NUT-HEX-DEL-CHAM 10-32-THD .067-IN-THK	7416.3	500220

Indicates factory-selected value

HP Part Number 85660-60015

A7A1 Reference Phase Detector

Reference Designation	HP Part Number	C D	Qty	Description	Mfr Code	Mfr Part Number
A7A1MP7	8151-0013	4	1	WIRE 22AWG 1X22	92194	298
A7A1MP8	85660-20045	7	1	CASTING, COVER	2848C	85660-20045
A7A1MP9	86701-40001	9	1	PC EXTRACTOR	2848C	86701-40001
A7A1Q1	1854-0019	3	1	TRANSISTOR NPN SI TO-18 PD=360MW	04713	
A7A1Q2	1854-0019	3	1	TRANSISTOR NPN SI TO-18 PD=360MW	04713	
A7A1Q3	1854-0019	3	1	TRANSISTOR NPN SI TO-18 PD=360MW	04713	
A7A1Q4	1855-0049	1	1	TRANSISTOR-JFET DUAL N-CHAN D-MODE SI PD	34677	
A7A1Q5	1853-0451	5	1	TRANSISTOR PNP 2N3799 SI TO-18 PD=360MW	04713	
A7A1Q6	1853-0451	5	1	TRANSISTOR PNP 2N3799 SI TO-18 PD=360MW	04713	
A7A1Q7	1853-0034	0	1	TRANSISTOR PNP SI TO-18 PD=360MW	04713	
A7A1R1	0757-0399	5	1	RESISTOR 82.5 +-1% .125W TF TC=O+-100	19701	SFR25H
A7A1R2	0757-0417	8	1	RESISTOR 562 +-1% .125W TF TC=O+-100	19701	SFR25H
A7A1R3	0757-0416	7	1	RESISTOR 511 +-1% .125W TF TC=O+-100	19701	SFR25H
A7A1R4	0757-0401	0	1	RESISTOR 100 +-1% .125W TF TC=O+-100	19701	SFR25H
A7A1R5	0698-3156	2	1	RESISTOR 14.7K 1% .125W TF TC=O+-100	19701	SFR25H
A7A1R6	0757-0401	0	1	RESISTOR 100 +-1% .125W TF TC=O+-100	19701	SFR25H
A7A1R7	0757-0420	3	1	RESISTOR 750 +-1% .125W TF TC=O+-100	19701	SFR25H
A7A1R8	0757-0438	3	1	RESISTOR 5.11K +-1% .125W TF TC=O+-100	19701	SFR25H
A7A1R9	0757-0399	5	1	RESISTOR 82.5 +-1% .125W TF TC=O+-100	19701	SFR25H
A7A1R10	0698-7222	1	1	RESISTOR 261 +-1% .05W TF TC=O+-100	19701	50635
A7A1R11	0698-7219	6	1	RESISTOR 196 +-1% .05W TF TC=O+-100	19701	50635
A7A1R12	0757-0442	9	1	RESISTOR 10K +-1% .125W TF TC=O+-100	19701	SFR25H
A7A1R13	0698-3453	2	1	RESISTOR 196K 1% .125W TF TC=O+-100	19701	SFR25H
A7A1R14	0757-0442	9	1	RESISTOR 10K +-1% .125W TF TC=O+-100	19701	SFR25H
A7A1R15	3698-3453	2	1	RESISTOR 196K 1% .125W TF TC=O+-100	19701	SFR25H
A7A1R16	0757-0441	8	1	RESISTOR 8.25K +-1% .125W TF TC=O+-100	19701	SFR25H
A7A1R17	3698-3438	3	1	RESISTOR 147 1% .125W TF TC=O+-100	19701	SFR25H
A7A1R18	0757-0346	2	1	RESISTOR 10 +-1% .125W TF TC=O+-100	91637	CMF-55-1, T-l
A7A1R19	1757-0346	2	1	RESISTOR 10 +-1% .125W TF TC=O+-100	91637	CMF-55-1, T-l
A7A1R20	0757-0441	8	1	RESISTOR 8.25K +-1% .125W TF TC=O+-100	19701	SFR25H
A7A1R21	0698-3438	3	1	RESISTOR 147 1% .125W TF TC=O+-100	19701	SFR25H
A7A1R22	0698-3136	8	1	RESISTOR 17.8K 1% .125W TF TC=O+-100	19701	SFR25H
A7A1R23	0757-0346	2	1	RESISTOR 10 +-1% .125W TF TC=O+-100	91637	CMF-55-1, T-l
A7A1R24	0698-3154	0	1	RESISTOR 4.22K 1% .125W TF TC=O+-100	19701	SFR25H
A7A1R25	0757-0346	2	1	RESISTOR 10 +-1% .125W TF TC=O+-100	91637	CMF-55-1, T-l
A7A1R26	0757-0280	3	1	RESISTOR 1K +-1% .125W TF TC=O+-100	19701	SFR25H
A7A1R27	0698-3154	0	1	RESISTOR 4.22K 1% .125W TF TC=O+-100	19701	SFR25H
A7A1R28	0698-3450	9	1	RESISTOR 42.2K 1% .125W TF TC=O+-100	19701	SFR25H
A7A1R29	0698-3449	6	1	RESISTOR 28.7K 1% .125W TF TC=O+-100	19701	SFR25H
A7A1R30	0757-0444	1	1	RESISTOR 12.1K +-1% .125W TF TC=O+-100	19701	SFR25H
A7A1R31	0698-3154	0	1	RESISTOR 4.22K 1% .125W TF TC=O+-100	19701	SFR25H
A7A1R32	0757-0346	2	1	RESISTOR 10 +-1% .125W TF TC=O+-100	91637	CMF-55-1. T-l
A7A1R33	0698-3154	0	1	RESISTOR 4.22K 1% .125W TF TC=O+-100	19701	SFR25H
A7A1R34	0757-0346	2	1	RESISTOR 10 +-1% .125W TF TC=O+-100	91637	CMF-55-1. T-l
A7A1R35	0757-0280	3	1	RESISTOR 1K +-1% .125W TF TC=O+-100	19701	SFR25H
A7A1R36	0757-0444	1	1	RESISTOR 12.1K +-1% .125W TF TC=O+-100	19701	SFR25H
A7A1R37	0757-0200	7	1	RESISTOR 5.62K +-1% .125W TF TC=O+-100	19701	SFR25H

**Indicates factory-selected value*

HP Part Number 85660-60015

A7A1 Reference Phase Detector

Reference Designation	HP Part Number	C D	Qty	Description	Mfr Code	Mfr Part Number
A7A1R38	0757-0421	4	1	RESISTOR 825 +-1% .125W TF TC=O+-100	19701	SFR25H
A7A1R39	0757-0440	7	1	RESISTOR 7.5K +-1% .125W TF TC=O+-100	19701	SFR25H
A7A1R40	0757-0394	C	1	RESISTOR 51.1 +-1% .125W TF TC=O+-100	19701	SFR25H
A7A1R41	0698-3446	3	1	RESISTOR 383 1% .125W TF TC=O+-100	19701	SFR25H
A7A1R42	0698-0085	C	1	RESISTOR 2.61K 1% .125W TF TC=O+-100	19701	SFR25H
A7A1R43	0757-0442	C	1	RESISTOR 10K +-1% .125W TF TC=O+-100	19701	SFR25H
A7A1R44	0757-0442	C	1	RESISTOR 10K +-1% .125W TF TC=O+-100	19701	SFR25H
A7A1R45	0757-0280	C	1	RESISTOR 1K +-1% .125W TF TC=O+-100	19701	SFR25H
A7A1R46	0698-3154	C	1	RESISTOR 4.22K 1% .125W TF TC=O+-100	19701	SFR25H
A7A1R47	0698-3453	2	1	RESISTOR 196K 1% .125W TF TC=O+-100	19701	SFR25H
A7A1R48	0757-0442	9	1	RESISTOR 10K +-1% .125W TF TC=O+-100	19701	SFR25H
A7A1R49	0698-7285	6	1	RESISTOR 110K +-1% .05W TF TC=O+-100	19701	5023R
A7A1R50	0698-3157	3	1	RESISTOR 19.6K 1% .125W TF TC=O+-100	19701	SFR25H
A7A1R51	3698-3157	3	1	RESISTOR 19.6K 1% .125W TF TC=O+-100	19701	SFR25H
A7A1R52	0757-0401	a	1	RESISTOR 100 +-1% .125W TF TC=O+-100	19701	SFR25H
A7A1R53	0698-3440	7	1	RESISTOR 196 1% .125W TF TC=O+-100	19701	SFR25H
A7A1R54	3698-7234	5	1	RESISTOR 825 +-1% .05W TF TC=O+-100	19701	50635
A7A1R55	3698-7257	2	1	RESISTOR 7.5K +-1% .05W TF TC=O+-100	19701	50635
A7A1R56	0757-0394	0	1	RESISTOR 51.1 +-1% .125W TF TC=O+-100	19701	SFR25H
A7A1R57	3698-3446	3	1	RESISTOR 383 1% .125W TF TC=O+-100	19701	SFR25H
A7A1R58	3698-7246	9	1	RESISTOR 2.61K +-1% .05W TF TC=O+-100	19701	50635
A7A1R59	0698-3440	7	1	RESISTOR 196 1% .125W TF TC=O+-100	19701	SFR25H
A7A1R61	0757-0280	3	1	RESISTOR 1K +-1% .125W TF TC=O+-100	19701	SFR25H
A7A1R62	0757-0278	9	1	RESISTOR 1.78K +-1% .125W TF TC=O+-100	19701	SFR25H
A7A1R63	1698-0085	0	1	RESISTOR 2.61K 1% .125W TF TC=O+-100	19701	SFR25H
A7A1R64	1698-3132	4	1	RESISTOR 261 1% .125W TF TC=O+-100	19701	SFR25H
A7A1R65	1698-0085	0	1	RESISTOR 2.61K 1% .125W TF TC=O+-100	19701	SFR25H
A7A1R66	1757-0421	4	1	RESISTOR 825 +-1% .125W TF TC=O+-100	19701	SFR25H
A7A1R67	0757-0280	3	1	RESISTOR 1K +-1% .125W TF TC=O+-100	19701	SFR25H
A7A1R68	0757-0416	7	1	RESISTOR 511 +-1% .125W TF TC=O+-100	19701	SFR25H
A7A1R69	0757-0416	7	1	RESISTOR 511 +-1% .125W TF TC=O+-100	19701	SFR25H
A7A1R70	1757-0416	7	1	RESISTOR 511 +-1% .125W TF TC=O+-100	19701	SFR25H
A7A1R71	0757-0274	5	1	RESISTOR 1.21K +-1% .125W TF TC=O+-100	19701	SFR25H
A7A1R72	0698-3132	4	1	RESISTOR 261 1% .125W TF TC=O+-100	19701	SFR25H
A7A1R73	0757-0317	7	1	RESISTOR 1.33K +-1% .125W TF TC=O+-100	19701	SFR25H
A7A1R74	1757-0289	2	1	RESISTOR 13.3K +-1% .125W TF TC=O+-100	19701	SFR25H
A7A1R75	0698-7236	7	1	RESISTOR 1K +-1% .05W TF TC=O+-100	19701	50635
A7A1T1	08552-6044	1	1	TRANSFORMER, RF 5-PIN	28480	08552-6044
A7A1T2	08552-6044	1	1	TRANSFORMER, RF 5-PIN	28480	08552-6044
A7A1TP1	1251-0600	0	1	CONNECTOR-SGL CONT PIN 1.14-MM-BSC-SZ SQ	27264	16-06-0034
A7A1U1	1858-0032	8	1	TRANSISTOR ARRAY 14-PIN PLSTC DIP	27014	LM3146
A7A1U2	1820-0328	6	1	IC GATE TTL NOR QUAD 2-INP	01295	SN7402N
A7A1U3	1820-1383	5	1	IC CNTR ECL BCD POS-EDGE-TRIG	04713	MC10138L
A7A1U4	1820-0802	1	1	IC GATE ECL NOR QUAD 2-INP	04713	MC10102P
A7A1U5	820-0223	3	1	IC OP AMP GP TO-99 PKG	27014	LM301AH
A7A1U6	820-0429	3	1	IC V RGLTR-FXD-POS 4.8/5.2V TO-39 PKG	27014	LM309H
A7A1VR1	902-3082	3	1	DIODE-ZNR 4.64V 5% DO-35 PD=.4W	04713	
A7A1VR2	902-3256	3	1	DIODE-ZNR 23.7V 5% DO-35 PD=.4W	04713	

******Indicates factory-selected value*

HP Part Number 85660-60015

A7A1 Reference Phase Detector

Reference Designation	HP Part Number	C D	Qty	Description	Mfr Code	Mfr Part Number
A7A1W1	15660-60084	8	1	CABLE ASSEMBLY, GRAY/ORANGE (INCLUDES J2)	28480	85660-60084

**Indicates factory-selected value*

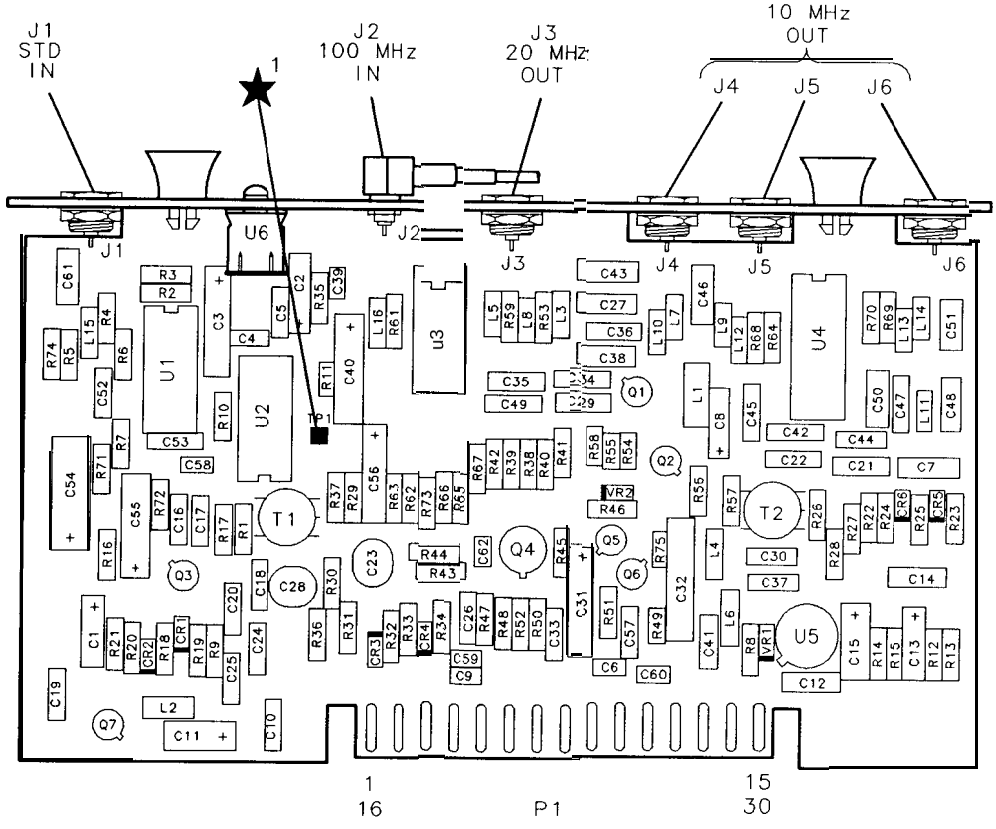

A7A1 Reference Phase Detector Component Locations, 85660-60015

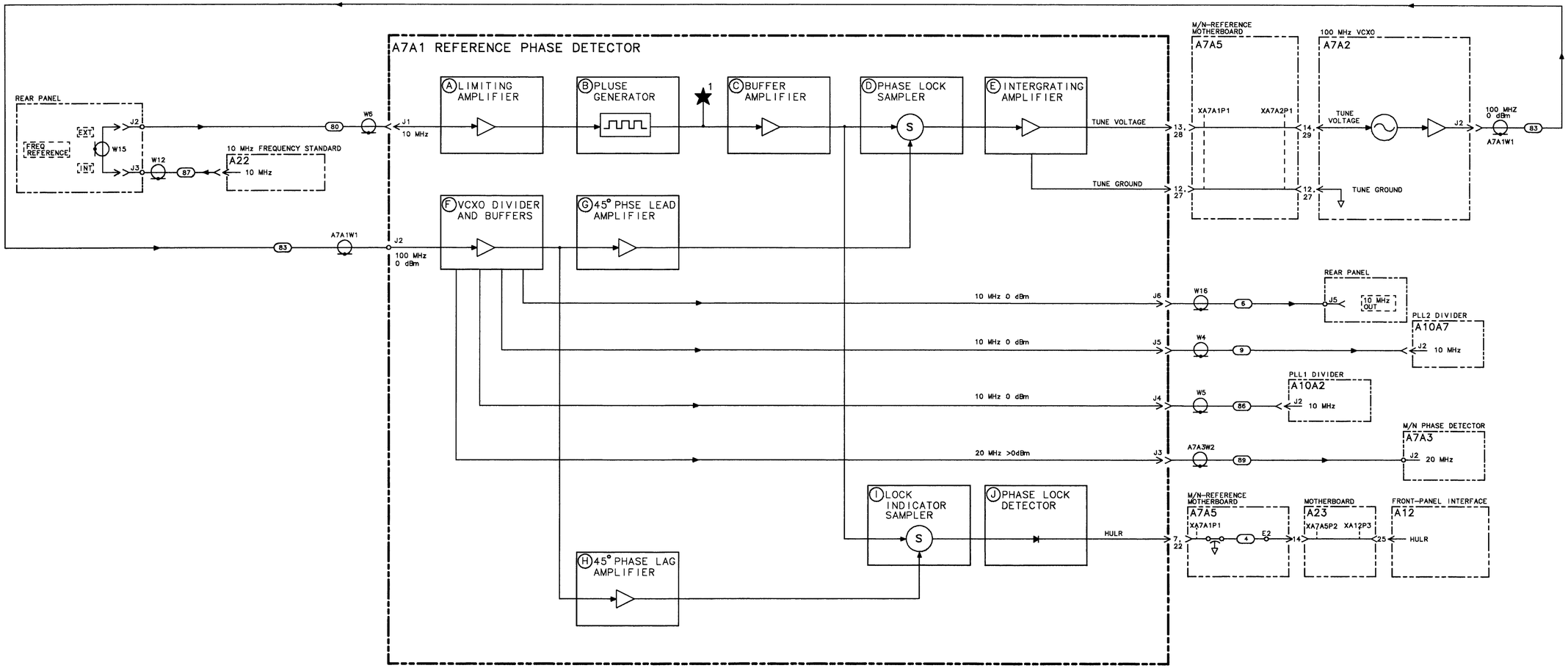

A7A1 REFERENCE PHASE DETECTOR, BLOCK DIAGRAM

A7A1 REFERENCE PHASE DETECTOR 85660-60015 (SERIAL PREFIX: 2410A)

P1

PIN	SIGNAL	TO/FROM	FUNCTION BLOCK
1	-10V		K
16	-10V		K
2	-40V		K
17	-40V		K
3	GND		K
18	GND		K
4	GND		K
19	GND		K
5	+20V		K
20	+20V		K
6	N.C.		
21	N.C.		
7	HULR	A12P3-25	J
22	HULR	A12P3-25	J
8	GND		K
23	GND		K
9	-5.2V		K
24	-5.2V		K
10	GND		K
25	GND		K
11	GND		K
26	GND		K
12	TUNE GROUND	A7A2	E
27	TUNE GROUND	P1-12,27	E
13	TUNE VOLTAGE	A7A2	E
28	TUNE VOLTAGE	P1-14,29	E
14	GND		K
29	GND		K
15	GND		K
30	GND		K

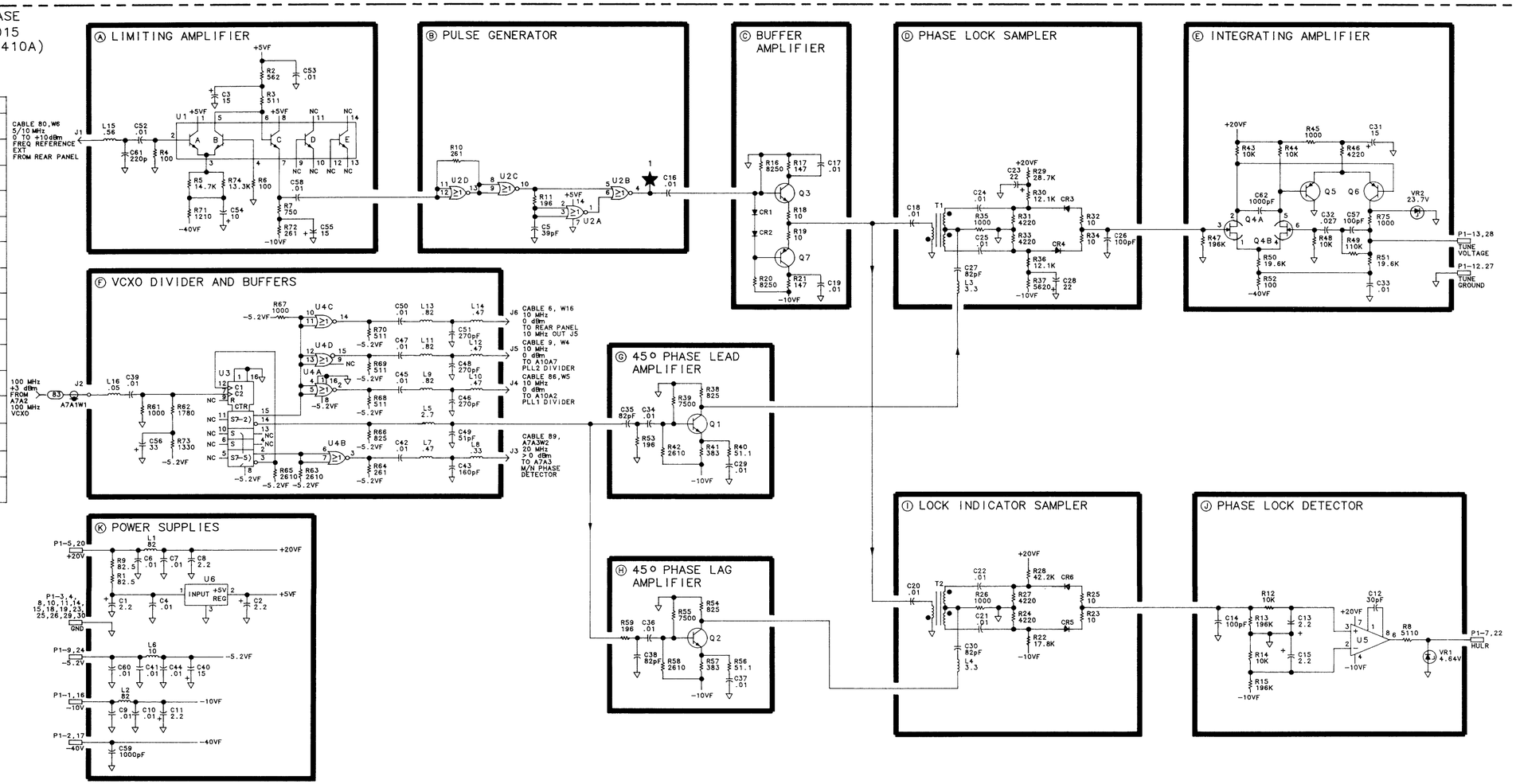

NOTES:

1. REFERENCE DESIGNATORS WITHIN THIS ASSEMBLY ARE ABBREVIATED. FOR COMPLETE REFERENCE DESIGNATION, PREFIX ABBREVIATION WITH ASSEMBLY DESIGNATION.
2. UNLESS OTHERWISE INDICATED: RESISTANCE IS IN OHMS (Ω) CAPACITANCE IS IN MICROFARADS (μF) INDUCTANCE IS IN MICROHENRIES (μH)
3. UNLESS OTHERWISE INDICATED: SIGNALS ENTER AT LEFT SIDE AND EXIT AT RIGHT SIDE OF FUNCTION BLOCKS.
4. Q4 PIN CONFIGURATION:



Q4 TOP VIEW

5. U6 PIN CONFIGURATION:



U6 TOP VIEW

6. MNEMONICS TABLE:

MNEMONIC	DESCRIPTION
HULR	HIGH-REFERENCE UNLOCKED

A7A1

A7A2

A7A2 100 MHz Voltage-Controlled Crystal Oscillator (VCXO), Circuit Description

A7A2 consists of a 100 MHz voltage-controlled crystal oscillator, buffer amplifiers, and a frequency quadrupler. In conjunction with A7A1 Reference Phase Detector, it forms the reference phase-lock loop. Outputs of 100 MHz and 400 MHz are used as frequency references by other assemblies in the instrument.

100 MHz Oscillator Ⓐ

Q5 functions as a common-base amplifier with feedback to form an oscillator. The feedback includes the 100 MHz crystal Y1 and varactor CR1 which are the principal frequency-determining components. CR1 is tuned by the output of A7A1 and can vary the frequency by approximately ±1 kHz. The amplitude of the oscillations is limited by CR3 and CR4. TP1 is accessible from the top cover; the voltage should be near -8 V dc for proper operation. The voltage is adjusted by tuning the oscillator with C4.

100 MHz Buffer Amplifier Ⓑ

Q6, Q7, Q8, Q9, and Q11 form a series of 100 MHz amplifiers. They buffer the 100 MHz outputs from each other as well as from the oscillator.

Quadrupler Ⓒ

100 MHz from Q7 in Ⓑ is applied to T3. The secondary of T3 is connected to Q3 and Q4 to form a full-wave rectifier. Positive half cycles of 100 MHz to T3 turn on Q3 while negative half cycles turn on Q4. The collectors are connected together to sum the currents and produce even harmonics of 100 MHz. The output is tuned to 400 MHz by C3 and L10 to select 400 MHz.

400 MHz Amplifier Ⓓ

Q1 and Q2 are two common-emitter tuned amplifier stages which amplify 400 MHz and filter undesired harmonics of 100 MHz. R67, R68, and R69 form a pad which is selected to give -10 dBm ±2 dB output at 400 MHz.

A7A2 100 MHz VCXO, Troubleshooting

The 100 MHz VCXO supplies all of the fixed reference frequencies for the HP 8566B. Separate 100 MHz outputs are routed to the A6A9, A10A4, and A7A1 assemblies. A 400 MHz signal is applied to the A7A3 assembly. The A7A1 assembly divides the 100 MHz input to provide 10 MHz and 20 MHz references.

100 MHz Oscillator Ⓐ

The tune voltage at A7A2TP1 is nominally -8 V. If an unlocked condition exists, this voltage is either -23 V or -1.3 V. If the level is -23 V, check the 10 MHz reference to A7A1. If the level is -1.3 V, check the outputs of the 100 MHz Buffer/Amplifier.

Typical voltage levels for the oscillator transistor Q5 are:

Emitter	−12.8 V
Base	−11.9 V
Collector	..O.O V

100 MHz Buffer/Amplifier Ⓑ

All 100 MHz output levels should be approximately 0 dBm. Typical voltage levels for each transistor are as shown in Table 1.

Table 1. 100 MHz Buffer/Amplifier Voltage Levels

	Q6	Q7	Q11	Q8	Q9
Emitter	4.0	3.9	3.9	4.5	5.2
Base	4.7	4.7	4.6	5.2	5.7
Collector	9.3	9.4	9.4	10.3	11.2

Quadrupler Ⓒ and 400 MHz Amplifier Ⓓ

Typical voltage levels for the Quadrupler and 400 MHz Amplifier are as shown in Table 2.

The 400 MHz Amplifier output at A7A2J1 (96 cable) is approximately -10 dBm when the A7A2 100 MHz board assembly is in the casting.

Table 2. Quadrupler and 400 MHz Amplifier Voltage Levels

	Q3	Q4	Q1	Q3
Emitter	-4.6	-5.1	-6.6	-6.6
Base	-5.9	-5.9	-5.9	-5.9
Collector	0.0	0.0	0.0	0.0

HP Part Number 85660-60135

A7A2 100 MHz VCXO

Reference Designation	HP Part Number	C D	Qty	Description	Mfr Code	Mfr Part Number
A7A2	85660-60135	0	1	BOARD ASSEMBLY, 100 MHZ VOLTAGE-CONTROLLED CRYSTAL OSCILLATOR (VCXO)	28480	85660-60135
A7A2C1	0121-0495	5	1	CAPACITOR-V TRMR-AIR 1.9-15.7PF 175V	74970	187-0309-125
A7A2C2	0121-0495	5	1	CAPACITOR-V TRMR-AIR 1.9-15.7PF 175V	74970	187-0309-125
A7A2C3	0121-0495	5	1	CAPACITOR-V TRMR-AIR 1.9-15.7PF 175V	74970	187-0309-125
A7A2C4	0121-0493	3	1	CAPACITOR-V TRMR-AIR 1.7-11PF 175V PC-MT	74970	187-0306-125
A7A2C5	0180-0049	9	1	CAP-FXD 20uF 50 V AL-ELCTLT	56289	30D206G050CC2-DSM
A7A2C6	0160-3456	6	1	CAPACITOR-FXD 1000PF +-10% 1KVDC CER		808-542 X5E 102K
A7A2C7	0160-3454	4	1	CAPACITOR-FXD 220PF +-10% 1KVDC CER		838-546 X5E 221K
A7A2C8*	0160-2251	7	1	CAP-FXD 5.6pF 500 V	52763	
A7A2C9	0160-4084	8	1	CAP-FXD 0.1uF 50 V	56289	1C20X7R104M050B
A7A2C10	0140-0191	8	1	CAP-FXD 56pF 300 V MICA	09023	CD15ED560J03
A7A2C11	0160-2204	0	1	CAPACITOR-FXD 100PF +-5% 300VDC MICA	09023	CD15FD101J03
A7A2C12	0160-3454	4	1	CAPACITOR-FXD 220PF +-10% 1KVDC CER		838-546 X5E 221K
A7A2C13	0160-3454	4	1	CAPACITOR-FXD 220PF +-10% 1KVDC CER		838-546 X5E 221K
A7A2C14	0160-3454	4	1	CAPACITOR-FXD 220PF +-10% 1KVDC CER		838-546 X5E 221K
A7A2C15	0160-2261	9	1	CAPACITOR-FXD 15PF +-5% 500VDC CER 0+-30	52763	2RDPLX05015RNP0
A7A2C16	0160-2261	9	1	CAPACITOR-FXD 15PF +-5% 500VDC CER 0+-30	52763	2RDPLX05015RNP0
A7A2C17	0160-3454	4	1	CAPACITOR-FXD 220PF +-10% 1KVDC CER		838-546 X5E 221K
A7A2C18	0160-3454	4	1	CAPACITOR-FXD 220PF +-10% 1KVDC CER		838-546 X5E 221K
A7A2C19	0160-2261	9	1	CAPACITOR-FXD 15PF +-5% 500VDC CER 0+-30	52763	2RDPLX05015RNP0
A7A2C20	0160-2261	9	1	CAPACITOR-FXD 15PF +-5% 500VDC CER 0+-30	52763	2RDPLX05015RNP0
A7A2C21	0160-3454	4	1	CAPACITOR-FXD 220PF +-10% 1KVDC CER		838-546 X5E 221K
A7A2C22	0160-3454	4	1	CAPACITOR-FXD 220PF +-10% 1KVDC CER		838-546 X5E 221K
A7A2C23	0160-3454	4	1	CAPACITOR-FXD 220PF +-10% 1KVDC CER		838-546 X5E 221K
A7A2C24	0160-3454	4	1	CAPACITOR-FXD 220PF +-10% 1KVDC CER		838-546 X5E 221K
A7A2C25	0160-3454	4	1	CAPACITOR-FXD 220PF +-10% 1KVDC CER		838-546 X5E 221K
A7A2C26	0160-2261	9	1	CAPACITOR-FXD 15PF +-5% 500VDC CER 0+-30	52763	2RDPLX05015RNP0
A7A2C27	0160-2261	9	1	CAPACITOR-FXD 15PF +-5% 500VDC CER 0+-30	52763	2RDPLX05015RNP0
A7A2C28	0160-3872	0	1	CAP-FXD 2.2pF 200 V		FD12C0G2D2R2C
A7A2C29	0160-3872	0	1	CAP-FXD 2.2pF 200 V		FD12C0G2D2R2C
A7A2C30	0160-3454	4	1	CAPACITOR-FXD 220PF +-10% 1KVDC CER		838-546 X5E 221K
A7A2C31	0160-3454	4	1	CAPACITOR-FXD 220PF +-10% 1KVDC CER		838-546 X5E 221K
A7A2C32	0160-2261	9	1	CAPACITOR-FXD 15PF +-5% 500VDC CER 0+-30	52763	2RDPLX05015RNP0
A7A2C33	0160-2261	9	1	CAPACITOR-FXD 15PF +-5% 500VDC CER 0+-30	52763	2RDPLX05015RNP0
A7A2C34	0160-3454	4	1	CAPACITOR-FXD 220PF +-10% 1KVDC CER		838-546 X5E 221K
A7A2C35	0160-3454	4	1	CAPACITOR-FXD 220PF +-10% 1KVDC CER		838-546 X5E 221K
A7A2C36	0160-3878	6	1	CAP-FXD 1000pF 100 V	04222	SR201C102MAAH
A7A2C37	0160-3878	6	1	CAP-FXD 1000pF 100 V	04222	SR201C102MAAH
A7A2C38	0160-3878	6	1	CAP-FXD 1000pF 100 V	04222	SR201C102MAAH
A7A2C39	0160-3454	4	1	CAPACITOR-FXD 220PF +-10% 1KVDC CER		838-546 X5E 221K
A7A2C40	0160-2238	0	1	CAP-FXD 1.5pF 500 V	52763	
A7A2C42	0160-3878	6	1	CAP-FXD 1000pF 100 V	04222	SR201C102MAAH
A7A2C43	0180-0116	1	1	CAPACITOR-FXD 6.8UF+-10% 35VDC TA	56289	150D685X9035B2-DYS
A7A2C44	0160-2253	9	1	CAP-FXD 6.8pF 500 V	52763	
A7A2C46	0160-3878	6	1	CAP-FXD 1000pF 100 V	04222	SR201C102MAAH
A7A2C47	0160-3454	4	1	CAPACITOR-FXD 220PF +-10% 1KVDC CER		838-546 X5E 221K

**Indicates factory-selected value*

HP Part Number 85660-60135

A7A2 100 MHz VCXO

Reference Designation	HP Part Number	C. D	Qty	Description	Mfr Code	Mfr Part Number
A7A2C48	0160-3456	6	1	CAPACITOR-FXD 1000PF +-10% 1KVDC CER		808-542 X5E 102K
A7A2C49	0160-3456	6	1	CAPACITOR-FXD 1000PF +-10% 1KVDC CER		808-542 X5E 102K
A7A2C50	0180-0116	1	1	CAPACITOR-FXD 6.8UF+-10% 35VDC TA	56289	150D685X9035B2-DYS
A7A2C51	0160-4299	7	1	CAPACITOR-FXD 2200PF +-20% 250VDC CER		808(2KV) X5R 222M
A7A2C52	0160-3456	6	1	CAPACITOR-FXD 1000PF +-10% 1KVDC CER		808-542 X5E 102K
A7A2C53	0160-3456	6	1	CAPACITOR-FXD 1000PF +-10% 1KVDC CER		808-542 X5E 102K
A7A2C54	0160-3454	4	1	CAPACITOR-FXD 220PF +-10% 1KVDC CER		838-546 X5E 221K
A7A2C55	0160-3454	4	1	CAPACITOR-FXD 220PF +-10% 1KVDC CER		838-546 X5E 221K
A7A2C56	0160-2437	1	1	CAPACITOR-FDTHRU 5000PF +80 -20% 200V	33095	54-713-033-X5V-502Z
A7A2CR1	0122-0245	5	1	DIODE-VVC 1N5139 6.8PF 10%	04713	IN5139
A7A2CR3	1901-0539	3	1	DIODE-SCHOTTKY SM SIG		
A7A2CR4	1901-0539	3	1	DIODE-SCHOTTKY SM SIG		
A7A2E1	9170-0029	3	1	CORE-SHIELDING BEAD	02114	56-590-65A2/4A
A7A2J2	1250-0544	9	1	CONNECTOR-RF SM-SNP M SGL-HOLE-FR 50-OHM	98291	051-049-0000-220
A7A2J3	1250-0544	9	1	CONNECTOR-RF SM-SNP M SGL-HOLE-FR 50-OHM	98291	051-049-0000-220
A7A2J4	1250-0544	9	1	CONNECTOR-RF SM-SNP M SGL-HOLE-FR 50-OHM	98291	051-049-0000-220
A7A2L2	9100-2250	9	1	INDUCTOR RF-CH-MLD 180NH +-10% .105D-INX	24226	10M180K
A7A2L3	9140-0158	6	1	INDUCTOR RF-CH-MLD 1UH +-10% .105D-INX.2	32159	1A1002M +-10%
A7A2L4*	9100-2254	3	1	INDUCTOR RF-CH-ML0 390NH +-10% .105D-INX	24226	10M390K
A7A2L5	9100-2538	6	1	INDUCTOR RF-CH-MLD 1UH +-10% .161D-INX.4	24226	17S101K
A7A2L6	9100-2251	0	1	INDUCTOR RF-CH-MLD 220NH +-10% .105D-INX	24226	10M220K
A7A2L7	9100-2251	0	1	INDUCTOR RF-CH-MLD 220NH +-10% .105D-INX	24226	10M220K
A7A2L8	9100-2251	0	1	INDUCTOR RF-CH-MLD 220NH +-10% .105D-INX	24226	10M220K
A7A2L9	9100-2251	0	1	INDUCTOR RF-CH-MLD 220NH +-10% .105D-INX	24226	10M220K
A7A2L14	9100-2247	4	1	INDUCTOR RF-CH-MLD 100NH +-10% .105D-INX	24226	10M100K
A7A2L15	9100-2248	5	1	INDUCTOR RF-CH-MLD 120NH +-10% .105D-INX	24226	10M120K
A7A2L16	9140-0158	6	1	INDUCTOR RF-CH-MLD 1UH +-10% .105D-INX.2	32159	1A1002M +-10%
A7A2L17	9140-0158	6	1	INDUCTOR RF-CH-MLD 1UH +-10% .105D-INX.2	32159	1A1002M +-10%
A7A2L18	9140-0144	0	1	INDUCTOR RF-CH-MLD 4.7UH +-10% .105D-INX	99800	1025-36
A7A2L19	9140-0144	0	1	INDUCTOR RF-CH-MLD 4.7UH +-10% .105D-INX	99800	1025-36
A7A2MP1				NOT ASSIGNED		
A7A2MP3	2190-0009	4	1	WASHER-LK INTL T NO. 8 .168-IN-ID	OG791	820-BC
A7A2MP4	2190-0124	4	1	WASHER-LK INTL T ND. 10 .195-IN-ID	98291	3002-26
A7A2MP5	2200-0101	0	1	SCREW-MACH 4-40 .188-IN-LG PAN-HD-POZI	77250	
A7A2MP6	2580-0002	4	1	NUT-HEX-DEL-CHAM 8-32-THD.085-IN-THK	80120	
A7A2MP7	2950-0078	3	1	NUT-HEX-DBL-CHAM 10-32-THD.067-IN-THK	74163	500220
A7A2MP9	8151-0013	4	1	WIRE 22AWG 1X22	92194	298
A7A2MP10	85660-20046	3	1	CASTING COVER	28480	85660-20046
A7A2MP11	86701-40001	3	1	EXTRACTDR PC	28480	86701-40001
A7A2MP12	86701-00045	7	1	SHIELD	28480	86701-00045
A7A2MP13	3050-0929	2	1	WASHER-FL NM 1/4 IN .263-IN-ID	86928	5610-72-10
A7A2MP14	0340-0177	4	1	INSULATOR-BSHG NYLON	89663	
A7A2Q1	1854-0345	3	1	TRANSISTOR NPN 2N5179 SI TO-72 PD=200MW	04713	2N5179
A7A2Q2	1854-0345	3	1	TRANSISTOR NPN 2N5179 SI TO-72 PD=200MW	04713	2N5179
A7A2Q3	1854-0345	3	1	TRANSISTOR NPN 2N5179 SI TO-72 PD=200MW	04713	2N5179
A7A2Q4	1854-0345	3	1	TRANSISTOR NPN 2N5179 SI TO-72 PD=200MW	04713	2N5179
A7A2Q5	1854-0247	9	1	TRANSISTOR NPN SI TO-39 PD=1W FT=800MHZ	04713	
A7A2Q6	1854-0345	3	1	TRANSISTDR NPN 2N5179 SI TO-72 PD=200MW	04713	2N5179

Indicates factory-selected value

Reference Designation	HP Part Number	CD	Qty	Description	Mfr Code	Mfr Part Number
A7A2Q7	1854-0345	8	1	TRANSISTOR NPN 2N5179 SI *TO-72* PD=200MW	*04713*	2N5179
A7A2Q8	1854-0345	8	1	TRANSISTOR NPN 2N5179 SI *TO-72* PD=200MW	*04713*	2N5179
A7A2Q9	1854-0345	8	1	TRANSISTOR NPN 2N5179 SI *TO-72* PD=200MW	*04713*	2N5179
A7A2Q10	1854-0404	0	1	TRANSISTOR NPN SI TO-18 PD=360MW	*04713*	
A7A2Q11	1854-0345	8	1	TRANSISTOR NPN 2N5179 SI *TO-72* PD=200MW	*04713*	2N5179
A7A2R1	*0757-0279*	0	1	RESISTOR 3.16K +-1% .125W TF TC=0+-100	19701	SFR25H
A7A2R2	*0757-0419*	0	1	RESISTOR 681 +-1% .125W TF TC=0+-100	*19701*	SFR25H
A7A2R3*	*0698-3444*	1	1	RESISTOR 316 1% .125W TF TC=0+-100	19701	SFR25H
A7A2R4	*0757-0422*	F	1	RESISTOR 909 +-1% .125W TF TC=0+-100	19701	SFR25H
A7A2R5	0698-3155	1	1	RESISTOR 4.64K 1% .125W TF TC=0+-100	19701	SFR25H
A7A2R6	*0698-7224*	3	1	RESISTOR 316 +-1% .05W TF TC=0+-100	19701	50635
A7A2R7	*0757-0346*	2	1	RESISTOR 10 +-1% .125W TF TC=0+-100	*91637*	CMF-55-1, T-l.
A7A2R8	*0757-0422*	F	1	RESISTOR 909 +-1% .125W TF TC=0+-100	19701	SFR25H
A7A2R9	*0757-0442*	C	1	RESISTOR 10K +-1% .125W TF TC=0+-100	*19701*	SFR25H
A7A2R10	*0757-0401*	0	1	RESISTOR 100 +-1% .125W TF TC=0+-100	19701	SFR25H
A7A2R11	*0757-0394*	0	1	RESISTOR 51.1 +-1% .125W TF TC=0+-100	19701	SFR25H
A7A2R12	*0757-0416*	7	1	RESISTOR 511 +-1% .125W TF TC=0+-100	19701	SFR25H
A7A2R13	*0757-0394*	0	1	RESISTOR 51.1 +-1% .125W TF TC=0+-100	19701	SFR25H
A7A2R14	*0757-0416*	7	1	RESISTOR 511 +-1% .125W TF TC=0+-100	19701	SFR25H
A7A2R15	*0757-0422*	F	1	RESISTOR 909 +-1% .125W TF TC=0+-100	19701	SFR25H
A7A2R16	*0757-0401*	0	1	RESISTOR 100 +-1% .125W TF TC=0+-100	19701	SFR25H
A7A2R17	0698-3150	B	1	RESISTOR 2.37K 1% .125W TF TC=0+-100	*19701*	SFR25H
A7A2R18	0698-3150	B	1	RESISTOR 2.37K *1%* .125W TF TC=0+-100	19701	SFR25H
A7A2R19	*0698-7198*	2	1	RESISTOR 26.1 +-1% .05W TF TC=0+-100	19701	50635
A7A2R20	*0698-3443*	2	1	RESISTOR *287* 1% .125W TF TC=0+-100	*19701*	SFR25H
A7A2R21	*0698-3429*	2	1	RESISTOR 19.6 1% .125W TF TC=0+-100	*19701*	SFR25H
A7A2R22	0698-3443	2	1	RESISTOR *287* 1% .125W TF TC=0+-100	19701	SFR25H
A7A2R23	0698-3150	B	1	RESISTOR 2.37K 1% .125W TF TC=0+-100	19701	SFR25H
A7A2R24	*3757-0401*	0	1	RESISTOR 100 +-1% .125W TF TC=0+-100	19701	SFR25H
A7A2R25	*3698-3150*	B	1	RESISTOR 2.37K 1% .125W TF TC=0+-100	19701	SFR25H
A7A2R26	*3757-0416*	7	1	RESISTOR 511 +-1% .125W TF TC=0+-100	*19701*	SFR25H
A7A2R27	0757-0346	2	1	RESISTOR 10 +-1% .125W TF TC=0+-100	*91637*	CMF-55-1, T-l
A7A2R28	*3757-0422*	F	1	RESISTOR 909 +-1% .125W TF TC=0+-100	*19701*	SFR25H
A7A2R29	0698-7198	2	1	RESISTOR 26.1 +-1% .05W TF TC=0+-100	19701	50635
A7A2R30	*3698-3443*	2	1	RESISTOR *287* 1% .125W TF TC=0+-100	*19701*	SFR25H
A7A2R31	0698-3429	2	1	RESISTOR 19.6 1% .125W TF TC=0+-100	19701	SFR25H
A7A2R32	*1698-3443*	2	1	RESISTOR *287* 1% .125W TF TC=0+-100	19701	SFR25H
A7A2R33	*1698-3443*	2	1	RESISTOR *287* 1% .125W TF TC=0+-100	*19701*	SFR25H
A7A2R34	*1698-3429*	2	1	RESISTOR 19.6 1% .125W TF TC=0+-100	19701	SFR25H
A7A2R35	*1698-7223*	2	1	RESISTOR *287* +-1% .05W TF TC=0+-100	*19701*	50635
A7A2R36	1698-3150	F	1	RESISTOR 2.37K 1% .125W TF TC=0+-100	19701	SFR25H
A7A2R37	*1757-0422*	F	1	RESISTOR 909 +-1% .125W TF TC=0+-100	19701	SFR25H
A7A2R38	0757-0401	2	1	RESISTOR 100 +-1% .125W TF TC=0+-100	19701	SFR25H
A7A2R39	0698-3150	B	1	RESISTOR 2.37K 1% .125W TF TC=0+-100	19701	SFR25H
A7A2R40	0757-0416	7	1	RESISTOR 511 +-1% .125W TF TC=0+-100	19701	SFR25H
A7A2R41	0757-0394	2	1	RESISTOR 51.1 +-1% .125W TF TC=0+-100	19701	SFR25H
A7A2R42	*1698-0084*	2	1	RESISTOR 2.15K 1% .125W TF TC=0+-100	19701	SFR25H

**Indicates factory-selected value*

HP Part Number 85660-60135

A7A2 100 MHz VCXO

Reference Designation	HP Part Number	C D	Qty	Description	Mfr Code	Mfr Part Number
A7A2R43	0698-3155	1	1	RESISTOR 4.64K 1% .125W TF TC=O+-100	19701	SFR25H
A7A2R44	0698-0084	9	1	RESISTOR 2.15K 1% .125W TF TC=O+-100	19701	SFR25H
A7A2R45	0698-0084	9	1	RESISTOR 2.15K 1% .125W TF TC=O+-100	19701	SFR25H
A7A2R46	*0757-0279*	C	1	RESISTOR 3.16K +-1% .125W TF TC=O+-100	19701	SFR25H
A7A2R47	*0757-0439*	4	1	RESISTOR 6.81K +-1% .125W TF TC=O+-100	19701	SFR25H
A7A2R48	*0757-0416*	7	1	RESISTOR 511 +-1% .125W TF TC=O+-100	19701	SFR25H
A7A2R49	*0757-0279*	C	1	RESISTOR 3.16K +-1% .125W TF TC=O+-100	19701	SFR25H
A7A2R50	*0757-0439*	4	1	RESISTOR 6.81K +-1% .125W TF TC=O+-100	19701	SFR25H
A7A2R51	*0757-0416*	7	1	RESISTOR 511 +-1% .125W TF TC=O+-100	19701	SFR25H
A7A2R52	*0757-0280*	3	1	RESISTOR 1K +-1% .125W TF TC=O+-100	19701	SFR25H
A7A2R53	*0757-0394*	C	1	RESISTOR 51.1 +-1% .125W TF TC=O+-100	*19701*	SFR25H
A7A2R54	*0757-0394*	C	1	RESISTOR 51.1 +-1% .125W TF TC=O+-100	19701	SFR25H
A7A2R55	*0757-0422*	5	1	RESISTOR 909 +-1% .125W TF TC=O+-100	19701	SFR25H
A7A2R56	0698-3150	6	1	RESISTOR 2.37K 1% .125W TF TC=O+-100	19701	SFR25H
A7A2R57	*0757-0401*	C	1	RESISTOR 100 +-1% .125W TF TC=O+-100	19701	SFR25H
A7A2R58	*0757-0401*	C	1	RESISTOR 100 +-1% .125W TF TC=O+-100	19701	SFR25H
A7A2R59	0698-3150	6	1	RESISTOR 2.37K 1% .125W TF TC=O+-100	19701	SFR25H
A7A2R60	*3757-0280*	3	1	RESISTOR 1K +-1% .125W TF TC=O+-100	19701	SFR25H
A7A2R61	*3757-0397*	3	1	RESISTOR 68.1 +-1% .125W TF TC=O+-100	19701	SFR25H
A7A2R62	*3757-0401*	0	1	RESISTOR 100 +-1% .125W TF TC=O+-100	19701	SFR25H
A7A2R67*	0698-3437	2	1	RESISTOR 133 1% .125W TF TC=O+-100	19701	SFR25H
A7A2R68*	0698-4037	0	1	RESISTOR 46.4 1% .125W TF TC=O+-100	19701	SFR25H
A7A2R69*	*3698-3437*	2	1	RESISTOR 133 1% .125W TF TC=O+-100	19701	SFR25H
A7A2T1	08553-6012	5	1	TRANSFORMER	28480	08553-6012
A7A2T2	38553-6012	5	1	TRANSFORMER	28480	08553-6012
A7A2T3	08553-6012	5	1	TRANSFORMER	28480	08553-6012
A7A2TP2	1251-0600	0	1	CONNECTOR-SGL CONT PIN 1.14-MM-BSC-SZ SQ	*27264*	16-06-0034
A7A2TP3	1251-0600	0	1	CONNECTOR-SGL CONT PIN 1.14-MM-BSC-SZ SQ	*27264*	16-06-0034
A7A2TP4	1251-0600	0	1	CONNECTOR-SGL CONT PIN 1.14-MM-BSC-SZ SQ	*27264*	16-06-0034
A7A2W1	35660-60082	6	1	CABLE ASSEMBLY, WHITE/BLUE (INCLUDES J1)	28480	85660-60082
A7A2Y1	1410-1086	5	1	:RYSTAL-QUARTZ 100 MHZ HC-35/U-HLDR	00809	

Indicates factory-selected value

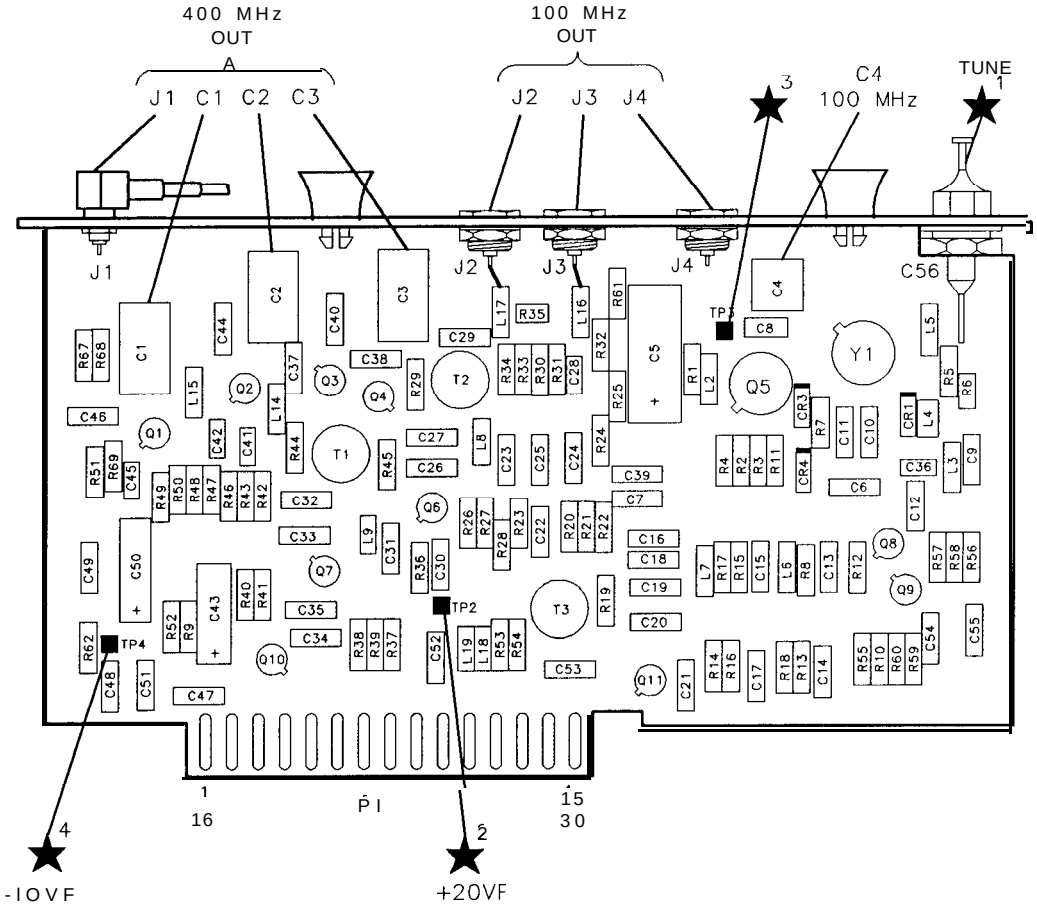

A7A2 100 MHz VCXO Component Locations, 85660-60135

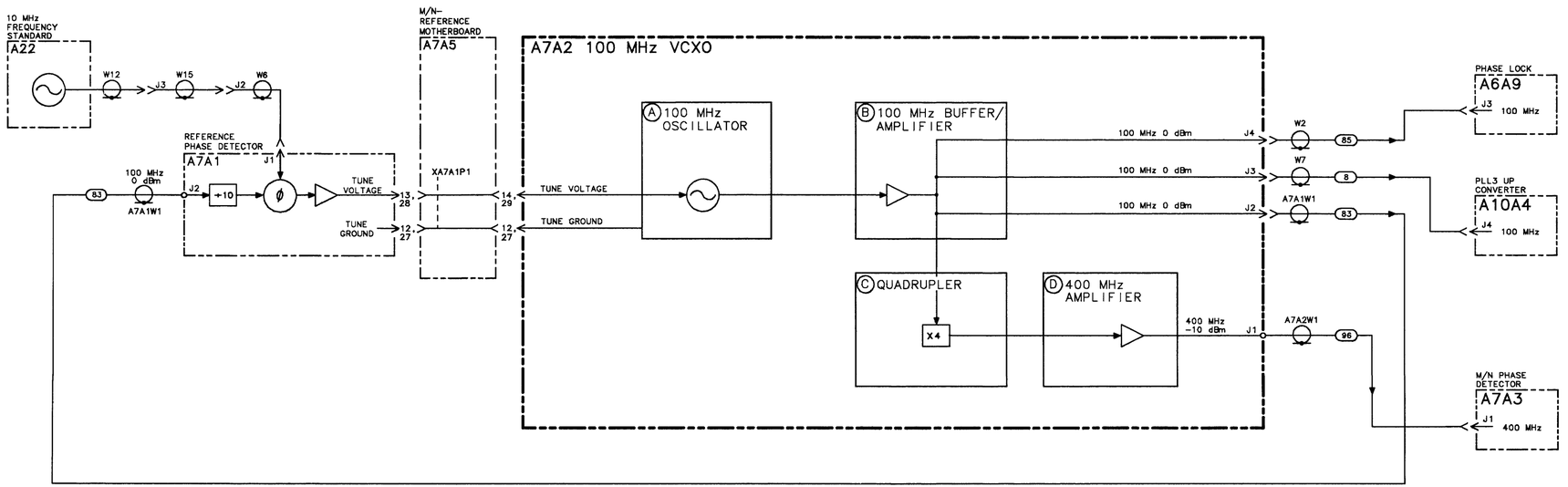

A7A2 100 MHz VCXO, BLOCK DIAGRAM

A7A2 100 MHz VOLTAGE-CONTROLLED CRYSTAL OSCILLATOR (VCXO)
85660-60135
(SERIAL PREFIX: 2410A)

P1

PIN	SIGNAL	TO/FROM	FUNCTION BLOCK
1	-10V		E
16	-10V		E
2	NC		
17	NC		
3	-40V		A
18	-40V		A
4	NC		
19	NC		
5	+20V		E
20	+20V		E
6	GND		E
21	GND		E
7	GND		E
22	GND		E
8	GND		E
23	GND		E
9	GND		E
24	GND		E
10	GND		E
25	GND		E
11	GND		E
26	GND		E
12	TUNE GROUND	A7A1 P1-12,27	A
27	TUNE GROUND		A
13	NC		
28	NC		
14	TUNE VOLTAGE	A7A1 P1-13,28	A
29	TUNE VOLTAGE		A
15	GND		E
30	GND		E

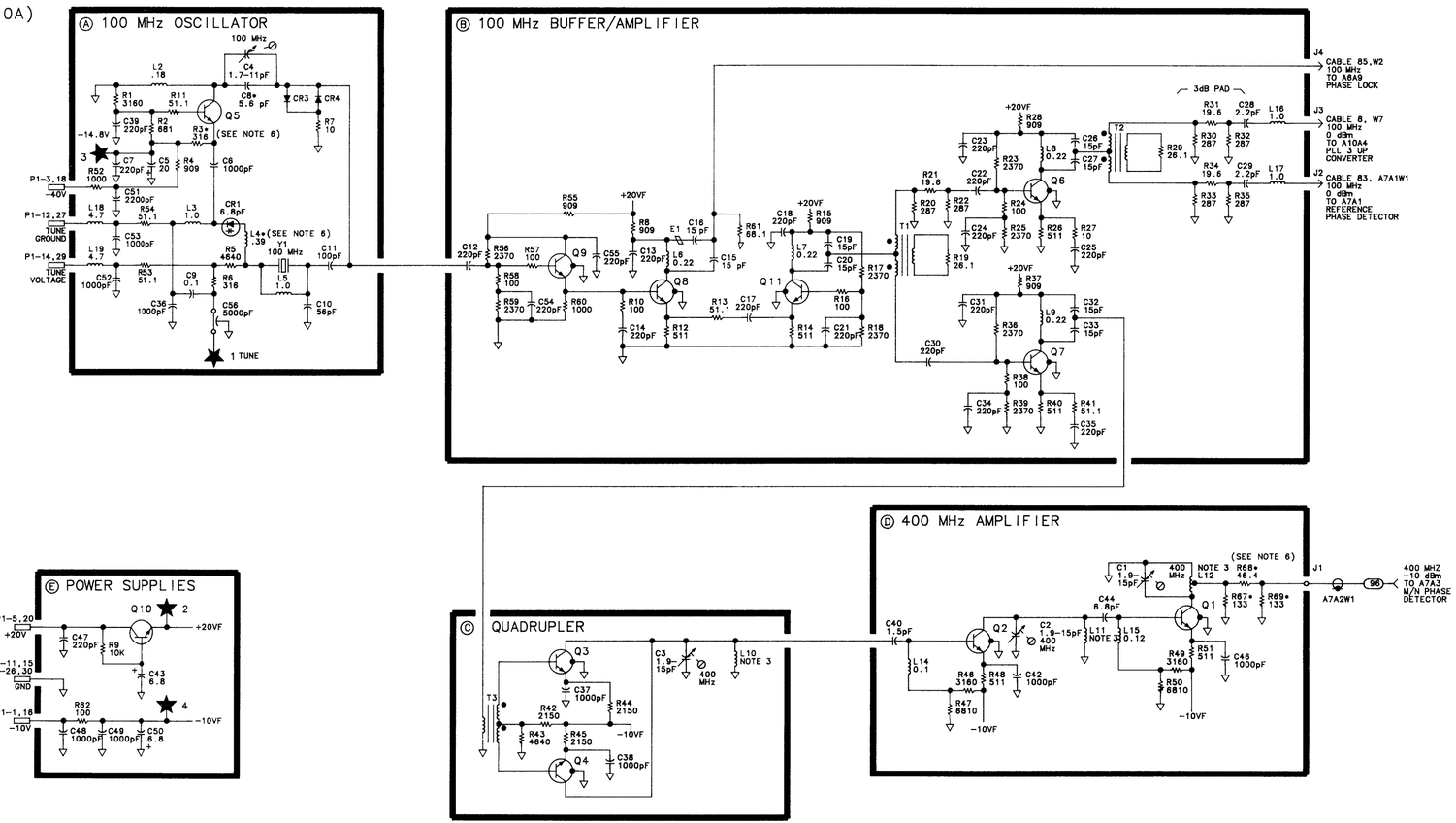

NOTES:

1. REFERENCE DESIGNATORS WITHIN THIS ASSEMBLY ARE ABBREVIATED. FOR COMPLETE REFERENCE DESIGNATION, PREFIX ABBREVIATION WITH ASSEMBLY DESIGNATION.
2. UNLESS OTHERWISE INDICATED: RESISTANCE IS IN OHMS (Ω) CAPACITANCE IS IN MICROFARADS(μF) INDUCTANCE IS IN MICROHENRIES(μH)
3. L10, L11, AND, L12 ARE PART OF PRINTED CIRCUIT BOARD
4. ASTERISK (*) INDICATES FACTORY SELECTED COMPONENT. TYPICAL VALUE IS SHOWN.
5. UNLESS OTHERWISE INDICATED: SIGNALS ENTER AT LEFT SIDE AND EXIT AT RIGHT SIDE OF FUNCTION BLOCKS.
6. C8*, L4*, R3*, R67*, R68*, AND R69*, ARE FACTORY-SELECTED COMPONENTS. THE RANGE OF ACCEPTABLE VALUES ARE LISTED BELOW.

C8*:	OPEN – 15pF
L4*:	220nH – 680nH
R3*:	196Ω – 511Ω
R67*:	110Ω – 825Ω – OR – OPEN
R68*:	6.8Ω – 81.9Ω – OR – SHORTED
R69*:	110Ω – 825Ω – OR – OPEN

A7A2

A7A2 100 MHz VCXO, SCHEMATIC DIAGRAM

A7A3

A7A3 M/N Phase Detector, Circuit Description

The M/N phase detector has two programmable frequency dividers: an M divider and an N divider. M and N are integer numbers which give the ratio of divider input frequency to divider output frequency. This is the divide number. The input to the N divider is 20 MHz; the M divider input is the difference frequency between the M/N VCO (355 to 395 MHz) and 400 MHz. The two divider outputs are compared in a phase/frequency detector. The detector output is amplified and applied to A7A4 M/N Output where it is used to tune the M/N VCO.

In general, the M/N output frequency (from A7A4) is (200 to 10 M/N) MHz. The M/N VCO frequency is twice the M/N output frequency. The spectrum analyzer frequency diagnostics (displayed by (SHIFT) (MKR▶REF LVL)) show the M number, N number, and M/N frequency. The fifth line of diagnostics contains three integers; the second integer is the M number, and the third integer is the N number. The next (sixth) diagnostic line gives the M/N output frequency in MHz (177.5 MHz to 197.5 MHz).

TTL ⇒ ECL Level Translators Ⓐ

The numbers to program the frequency dividers come from Al2 Front-Panel Interface in binary at TTL levels. U3, U13, and U17 shift these to ECL levels which are approximately -0.9 V logic high and -1.7 V logic low. N1 and Ml designate the least significant bits.

N Divider Ⓑ and M Divider Ⓒ

The M and N dividers are virtually identical. Basically, the four most significant bits of N (three bits for M) N3, N4, N5, N6 load a counter U6. It counts down to two and is reloaded on the next clock pulse. The two least significant bits, N1 and N2, control pulse swallowing logic which causes the counter to count down to 1 instead of 2 before reloading. The logic determines the proper number of extra pulses to be swallowed to effect the proper divide number.

For troubleshooting, it is helpful to set the M and N numbers equal in a 1 MHz span using the frequency diagnostics explained above. Waveforms at corresponding points in the two dividers can then be compared to pinpoint the problem.

Mixer Ⓓ

Q3 is an amplifier which drives the LO port of the mixer Q24. It supplies about +5 dBm over the 355 to 395 MHz range. The output of the mixer is the difference between 400 MHz and the M/N VCO frequency which gives an IF frequency between 5 and 45 MHz. The IF level is about -17 dBm.

IF Amplifier Ⓔ

The 60 MHz low-pass filter rejects unwanted mixing products from the mixer. Q4 and U18B amplify and limit the IF signal and give it the proper levels to run the following ECL circuitry.

Phase/Frequency Detector Ⓕ

The outputs of M and N dividers are compared in U1. When they are in phase, the outputs of U1 are narrow, coincident pulses. For unlock conditions, the output pulses are of varying widths.

Preamplifier Ⓖ

Q1 and Q2 are a low-noise differential pair preamplifier. Their outputs are combined in the integrating amplifier of A7A4.

Phase Lock Indicator Ⓗ

U2A and U2B are voltage comparators which compare each tune line to the average plus a small offset provided by R29. If the loop unlocks, one of the preamplifier outputs is higher than the comparison voltage, and the phase lock indicator goes high, indicating the unlock condition.

A7A3 M/N Phase Detector, Troubleshooting

The A7A3 M/N Phase Detector mixes the A7A4 M/N VCO output (355 to 395 MHz) with 400 MHz from the A7A2 100 MHz VCXO. The product of this mixing and the 20 MHz reference from the A7A1 are then divided by the M and N dividers respectively, and their resultant outputs are compared by a phase/frequency detector. The phase error is used to tune the A7A4 VCO.

The two dividers (M and N) are identical in operation and their waveforms can be compared for troubleshooting purposes. The M and N numbers can be set to the same value and various test points within each divider compared to reveal a malfunction, providing one of the dividers is known to be operating properly.

M Divider Ⓒ and N Divider Ⓑ

To display the M and N divide numbers on the HP 8566B CRT, key in the following settings:

[2-22 GHz]
[SHIFT] [MKR⇒REF LEVEL] (KSR)
[SHIFT] [RES BW] (KSF)
[FREQUENCYSPAN] . . . . . 0 Hz
[CENTER FREQUENCY] . . . . . 3.77 GHz
SWEEP . . . . . [SINGLE]

The third line of the diagnostic (KSR) should read as follows:

1 20 20

The second and third numbers are the M and N divide numbers respectively. The waveform at test points 3 and 7, 5 and 6, and 1 and 2 should be as shown in Figures 1, 2, and 3 respectively. The Center Frequencies for Figure la, lb, lc, and 1d are 3.77 GHz, 3.96 GHz, 4.15 GHz, and 4.34 GHz respectively. The M and N numbers are 20, 21, 22, and 23 respectively.

Oscilloscope control settings for Figure 1, Figure 2, and Figure 3 are:

Vertical: 0.1 V/Div
Horizontal: 0.2 μsec/Div
Probe: 10:1

Note

Waveforms on the M Divider © require the M/N VCO be phase-locked at 380 MHz. If the M/N VCO is not phase-locked, an external signal generator may be used to locate the failure.

Note

All waveform voltage levels are emitter coupled logic (ECL) levels:

-0.9 V = high, -1.7 V = low.

3

Mixer Ⓓ and IF Amplifier Ⓔ

The Mixer inputs are 400 MHz from A7A2 100 MHz VCXO and 355 to 395 MHz from A7A4 M/N Output. When the M and N numbers are the same, the M/N output frequency is 380 MHz.

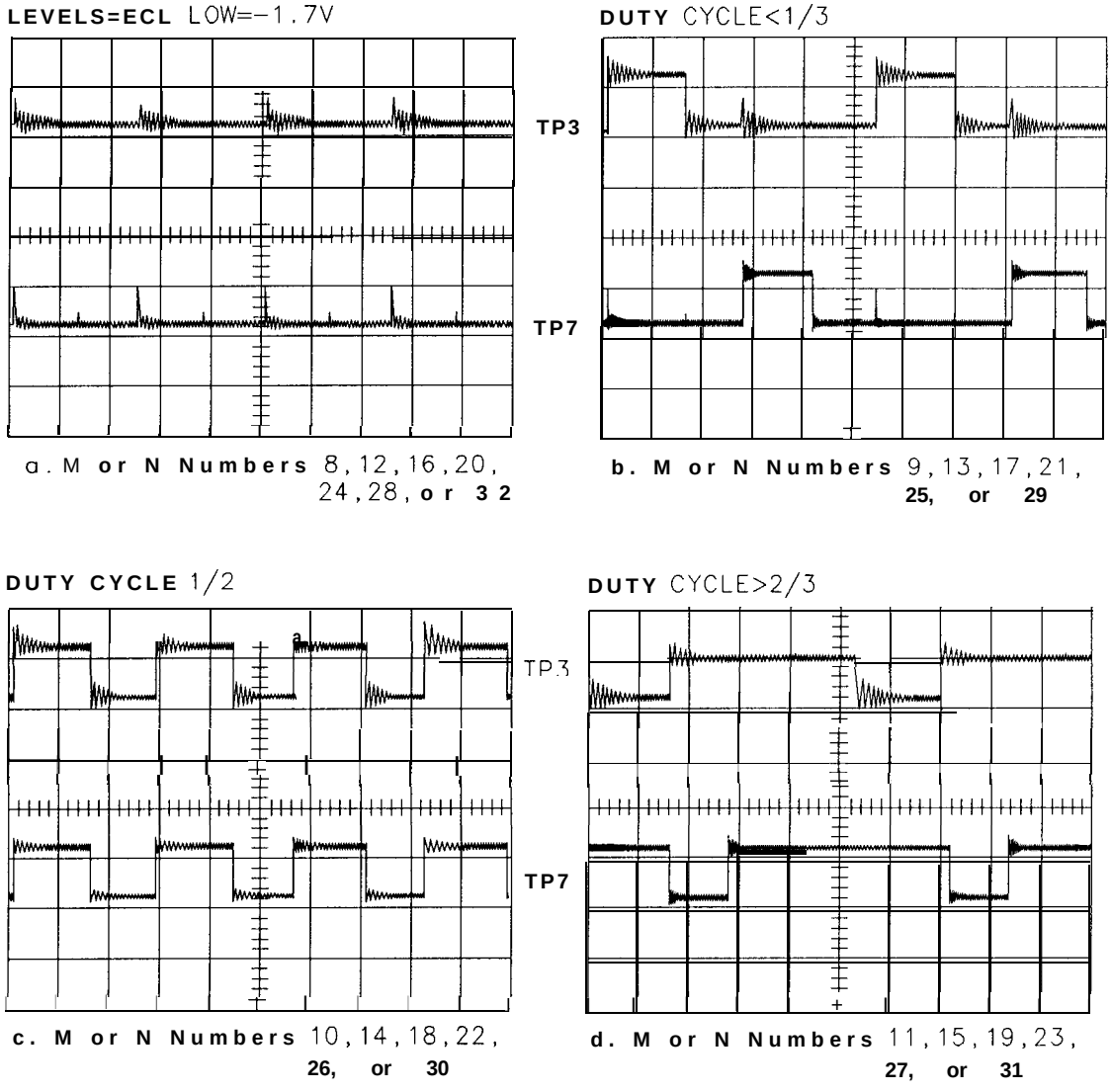

Figure 1. M and N Divider Waveforms for Test Points 3 and 7

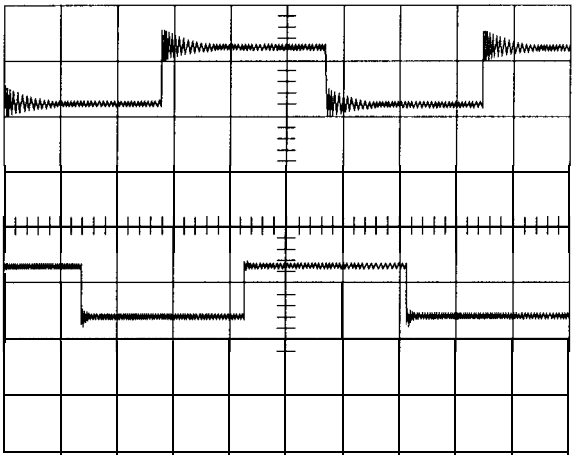

Figure 2. M and N Divider Waveforms for Test Points 5 and 6

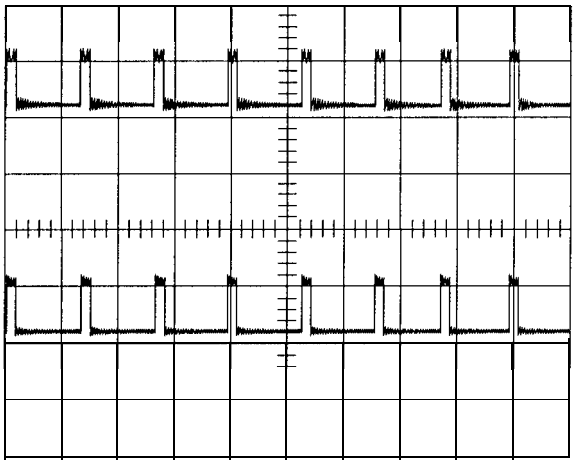

Figure 3. M and N Divider Waveforms for Test Points 1 and 2

The output of the IF Amplifier at U18 Pin 3 is at ECL logic levels: -0.9 V = high, -1.7 V = low. Typical voltage levels for Q3 and Q4 are shown in Table 1.

Table 1. IF Amplifier Voltage Levels

	Voltage Levels	
	Q3	Q4
Emitter	-5.6	-7.4
Base	-4.8	-6.6
Collector	0	-1.9

Phase Frequency Detector Ⓕ and Preamplifier Ⓖ

The Phase/Frequency Detector outputs pulses whose width is proportional to the phase difference of the two input signals. These pulses are filtered by the combination of R24/C5 and R25/C6. The Preamplifier amplifies these pulses which are representative of the phase difference of the two input signals. Typical voltage levels for the Preamplifier are shown in Table 2.

Table 2. Typical Preamplifier Voltage Levels

Voltage Levels				
	Phase Locked	No Input At		
		J1	J2	J3
Q1				
Emitter	-0.2	-1.c	-1.0	–1.(
Base	-0.8	-0.8	-0.8	-1.6
Collector	-5.2	-7.9	-7.9	-1.9
Q2				
Emitter	-0.2	-1.0	-1.0	-1.0
Base	-0.8	-1.7	-1.6	-0.8
Collector	-5.2	-1.8	-1.9	-7.9

Phase Lock Indicator Ⓗ

The outputs of the Preamplifier are compared to a reference voltage of -4 V by U2A and U2B. The output (HULM) is high (active state) when the loop is unlocked.

This can be checked by disconnecting the 400 MHz input at A7A3J1 (96 cable) and measuring the output of U2 (Pl-26). With the loop unlocked (400 MHz removed), this voltage should be approximately 4.64 V.

HP Part Number 85660-60136

A7A3 M/N Phase Detector

Reference Designation	HP Part Number	C D	Qty	Description	Mfr Code	Mfr Part Number
A7A3	85660-60136	I	1	BOARD ASSEMBLY, M/N PHASE DETECTOR	28480	85660-60136
A7A3C1	0160-4299	7	1	CAPACITOR-FXD 2200PF +-20% 250VDC CER		808(2KV) X5R 222M
A7A3C2	0160-0574	3	1	CAPACITOR-FXD .022UF +-20% 100VDC CER	04222	SR201C223MAAH
A7A3C3	0160-4299	7	1	CAPACITOR-FXD 2200PF +-20% 250VDC CER		808(2KV) X5R 222M
A7A3C4	0180-0100		1	CAPACITOR-FXD 4.7UF+-10% 35VDC TA	56289	150D475X9035B2-DYS
A7A3C5	0160-0572	1	1	CAPACITOR-FXD 2200PF +-20% 100VDC CER	04222	SR201C222MAAH
A7A3C6	0160-0572	1	1	CAPACITOR-FXD 2200PF +-20% 100VDC CER	04222	SR201C222MAAH
A7A3C7	0160-3876	4	1	CAPACITOR-FXD 47PF +-20% 200VDC CER	04222	SR202C470MAAH
A7A3C8	0160-3877	5	1	CAPACITOR-FXD 100PF +-20% 200VDC CER	04222	SR202C101MAAH
A7A3C9	0160-3876	4	1	CAPACITOR-FXD 47PF +-20% 200VDC CER	04222	SR202C470MAAH
A7A3C10	0160-0574	2	1	CAPACITOR-FXD .022UF +-20% IOOVDC CER	04222	SR201C223MAAH
A7A3C11	0160-3873	1	1	CAPACITOR-FXD 4.7PF +-.5PF 200VDC CER		FD12C0G2D4R7D
A7A3C12	0160-0574	3	1	CAPACITOR-FXD .022UF +-20% 100VDC CER	04222	SR201C223MAAH
A7A3C13	0160-3878	6	1	CAP-FXD 1000pF 100 V	04222	SR201C102MAAH
A7A3C14	0160-0574	3	1	CAPACITOR-FXD .022UF +-20% 100VDC CER	04222	SR201C223MAAH
A7A3C15	0160-3878	6	1	CAP-FXD 1000pF 100 V	04222	SR201C102MAAH
A7A3C16	0160-3878	6	1	CAP-FXD 1000pF 100 V	04222	SR201C102MAAH
A7A3C17	0180-0197	8	1	CAPACITOR-FXD 2.2UF+-10% 20VDC TA	56289	150D225X9020A2-DYS
A7A3C18	0160-4299	7	1	CAPACITOR-FXD 2200PF +-20% 250VDC CER		808(2KV) X5R 222M
A7A3C19	0180-0291	3	1	CAPACITOR-FXD 1UF+-10% 35VOC TA	56289	150D105X9035A2-DYS
A7A3C20	0160-0574	3	1	CAPACITOR-FXD .022UF +-20% IOOVDC CER	04222	SR201C223MAAH
A7A3C21	0160-4299	7	1	CAPACITOR-FXD 2200PF +-20% 250VDC CER		808(2KV) X5R 222M
A7A3C22	0160-0574	3	1	CAPACITOR-FXD .022UF +-20% 100VDC CER	04222	SR201C223MAAH
A7A3J1	1250-2112	1	1	CONNECTOR-RF SMB M SGL-HOLE-FR 50-OHM	98291	051-047-0259-220
A7A3L1	3100-1641	0	1	INDUCTOR RF-CH-MLD 240UH +-5% .166D-INX.	99800	1537-94
A7A3L2	3100-2259	a	1	INDUCTOR RF-CH-MLD 1.5UH +-lo% .105D-INX	99800	1025-24
A7A3L3	3100-1641	0	1	INDUCTOR RF-CH-MLD 240UH +-5% .166D-INX.	99800	1537-94
A7A3L4	9100-2891	4	1	INDUCTOR RF-CH-MLD 50NH +-lo% .105D-INX.	24226	10M050K-1
A7A3L5	9100-2891	4	1	INDUCTOR RF-CH-MLD 50NH +-lo% .105D-INX.	24226	10M050K-1
A7A3L6	9100-2248	5	1	INDUCTOR RF-CH-MLD 120NH +-lo% .105D-INX	24226	10M120K
A7A3L7	3100-2248	5	1	INDUCTOR RF-CH-MLD 120NH +-lo% .105D-INX	24226	10M120K
A7A3L8	3100-2248	5	1	INDUCTOR RF-CH-MLD 120NH +-lo% .105D-INX	24226	10M120K
A7A3MP1				NOT ASSIGNED		
A7A3MP3	0520-0129	a	13	SCREW-MACH 2-56 .312-IN-LG PAN-HD-POZI	77250	
A7A3MP4	1590-0533	5	13	THREADED INSERT-NUT 2-56 .06-IN-LG SST	46384	KFS2-256
A7A3MP5	1205-0285	0	5	HEAT SINK SGL DIP	13103	6007A-TOP
A7A3MP6	2190-0014	1	3	WASHER-LK INTL T NO. 2 .089-IN-ID	78189	1902-00-00-2580
A7A3MP7	2190-0124	4	5	WASHER-LK INTL T NO. 10 .195-IN-ID	98291	3002-26
A7A3MP8	2200-0101	0	2	SCREW-MACH 4-40 .188-IN-LG PAN-HD-PDZI	77250	
A7A3MP10	2950-0078	9	3	NUT-HEX-DBL-CHAM 10-32-THD .067-IN-THK	74163	500220
A7A3MP12	35660-20047	9	1	COVER PC M/N DETECTOR	28480	85660-20047
A7A3MP13	35660-20068	4	2	GROUND LUG	28480	85660-20068
A7A3MP14	86701-00032	2	1	HEAT SINK IC	28480	86701-00032
A7A3MP16	86701-40001	9	2	EXTRACTOR PC	28480	86701-40001
A7A3MP17	2190-0112	0	10	WASHER-LK SPLIT .Oaa-IN-ID	28480	2190-0112
A7A3Q1	1853-0451	5	1	TRANSISTOR PNP 2N3799 SI TO-18 PD=360MW	04713	
A7A3Q2	1853-0451	5	1	TRANSISTOR PNP 2N3799 SI TO-la PD=360MW	04713	

**Indicates facto y-selected value*

HP Part Number 85660-60136

A7A3 M/N Phase Detector

Reference Designation	HP Part Number	C D	Qty	Description	Mfr Code	Mfr Part Number
A7A3Q3	.854-0345	8	1	TRANSISTOR NPN 2N5179 SI TO-72 PD=200MW	04713	2N5179
A7A3Q4	.854-0345	8	1	TRANSISTOR NPN 2N5179 SI TO-72 PD=200MW	04713	2N5179
A7A3R1	1698-3154	C	1	RESISTOR 4.221: 1% .125W TF TC=O+-100	19701	SFR25H
A7A3R2	)698-3154	C	1	RESISTOR 4.22K 1% .125W TF TC=O+-100	19701	SFR25H
A7A3R3	1698-3154	C	1	RESISTOR 4.22K 1% .125W TF TC=O+-100	19701	SFR25H
A7A3R4	)698-3154	0	1	RESISTOR 4.22K 1% .125W TF TC=O+-100	19701	SFR25H
A7A3R5	)698-7267	4	1	RESISTOR 19.6K +-1% .05W TF TC=O+-100	19701	50635
A7A3R6	1757-0401	0	1	RESISTOR 100 +-1% .125W TF TC=O+-100	19701	SFR25H
A7A3R7	)698-0083	a	1	RESISTOR 1.96K 1% .125W TF TC=O+-100	19701	SFR25H
A7A3R8	)698-7192	4	1	RESISTOR 14.7 +-1% .05W TF TC=O+-100	19701	50635
A7A3R9	)757-0280	3	1	RESISTOR 1K +-1% .125W TF TC=O+-100	19701	SFR25H
A7A3R10	)757-0280	3	1	RESISTOR 1K +-1% .125W TF TC=O+-100	19701	SFR25H
A7A3R11	)698-3154	0	1	RESISTOR 4.22K 1% .125W TF TC=O+-100	19701	SFR25H
A7A3R12	)698-7212	9	1	RESISTOR 100 +-1% .05W TF TC=O+-100	19701	50635
A7A3R13	)698-3157	3	1	RESISTOR 19.6K 1% .125W TF TC=O+-100	19701	SFR25H
A7A3R14	)757-0416	7	1	RESISTOR 511 +-1% .125W TF TC=O+-100	19701	SFR25H
A7A3R15	)757-0416	7	1	RESISTOR 511 +-1% .125W TF TC=O+-100	19701	SFR25H
A7A3R16	)698-7248	1	1	RESISTOR 3.16K +-1% .05W TF TC=O+-100	19701	50635
A7A3R17	698-7248	1	1	RESISTOR 3.16K +-1% .05W TF TC=O+-100	19701	50635
A7A3R18	698-7223	2	1	RESISTOR 287 +-1% .05W TF TC=O+-100	19701	50635
A7A3R19	698-7256	1	1	RESISTOR 6.81K +-1% .05W TF TC=O+-100	19701	50635
A7A3R20	698-7248	1	1	RESISTOR 3.16K +-1% .05W TF TC=O+-100	19701	50635
A7A3R21	698-7220	9	1	RESISTOR 215 +-1% .05W TF TC=O+-100	19701	50635
A7A3R22	698-7220	9	1	RESISTOR 215 +-1% .05W TF TC=O+-100	19701	50635
A7A3R23	698-7192	4	1	RESISTOR 14.7 +-1% .05W TF TC=O+-100	19701	50635
A7A3R24	757-0416	7	1	RESISTOR 511 +-1% .125W TF TC=O+-100	19701	SFR25H
A7A3R25	757-0416	7	1	RESISTOR 511 +-1% .125W TF TC=O+-100	19701	SFR25H
A7A3R26	757-0441	B	1	RESISTOR 8.25K +-1% .125W TF TC=O+-100	19701	SFR25H
A7A3R27	757-0441	B	1	RESISTOR 8.25K +-1% .125W TF TC=O+-100	19701	SFR25H
A7A3R28	698-3157	3	1	RESISTOR 19.6K 1% .125W TF TC=O+-100	19701	SFR25H
A7A3R29	698-3162	D	1	RESISTOR 46.4K 1% .125W TF TC=O+-100	19701	SFR25H
A7A3R30	698-0083	B	1	RESISTOR 1.96K 1% .125W TF TC=O+-100	19701	SFR25H
A7A3TP1	251-0600	D	1	CONNECTOR-SGL CONT PIN 1.14-MM-BSC-SZ SQ	27264	16-06-0034
A7A3TP2	251-0600	3	1	CONNECTOR-SGL CONT PIN 1.14-MM-BSC-SZ SQ	27264	16-06-0034
A7A3TP3	251-0600	3	1	CONNECTOR-SGL CONT PIN 1.14-MM-BSC-SZ SQ	27264	16-06-0034
A7A3TP4	251-0600	3	1	CONNECTOR-SGL CONT PIN 1.14-MM-BSC-SZ SQ	27264	16-06-0034
A7A3TP5	251-0600	3	1	CONNECTOR-SGL CONT PIN 1.14-MM-BSC-SZ SQ	27264	16-06-0034
A7A3TP6	251-0600	3	1	CONNECTOR-SGL CONT PIN 1.14-MM-BSC-SZ SQ	27264	16-06-0034
A7A3TP7	251-0600	3	1	CONNECTOR-SGL CONT PIN 1.14-MM-BSC-SZ SQ	27264	16-06-0034
A7A3U1	820-1344	3	1	IC PL LOOP 14-DIP-C PKG	04713	MC12040L
A7A3U2	081-8117	3	1	SCREEN 1826-0092	28480	5081-8117
A7A3U3	810-0251	3	1	VETWORK-RES 10-SIP MULTI-VALUE	91637	CSC10C-00-SXX
A7A3U4	820-1225	4	1	IC FF ECL D-M/S DUAL	04713	MC10231P
A7A3U5	810-0204	5	1	UETWORK-RES 8-SIP 1.0K OHM X 7	11236	750-81
A7A3U6	820-0821	4	1	IC CNTR ECL BIN UP/DOWN SYNCHRO POS-EDGE	04713	MC10136L
A7A3U7	820-0802	L	1	IC GATE ECL NOR QUAD 2-INP	04713	MC10102P
A7A3U8	310-0204	5	1	YETWORK-RES 8-SIP 1.0K OHM X 7	11236	750-81
A7A3U9	820-0806	5	1	IC GATE ECL OR-NOR DUAL 4-5-INP	04713	MC10109P

Indicates factory-selected value

HP Part Number 85660-60136

A7A3 M/N Phase Detector

Reference Designation	HP Part Number	CD	Qty	Description	Mfr Code	Mfr Part Number
A7A3U10	1820-0820	3	1	IC FF ECL J-BAR K-BAR COM CLOCK DUAL	04713	MC10135L
A7A3U11	1810-0204	6	1	NETWORK-RES 8-SIP 1.0K OHM X 7	11236	750-81
A7A3U12	1820-0802	1	1	IC GATE ECL NOR QUAD 2-INP	04713	MC10102P
A7A3U13	1810-0251	3	1	NETWORK-RES 10-SIP MULTI-VALUE	91637	CSC10C-00-SXX
A7A3U14	1820-1225	4	1	IC FF ECL D-M/S DUAL	04713	MC10231P
A7A3U15	1810-0204	6	1	NETWORK-RES 8-SIP 1.0K OHM X 7	11236	750-81
A7A3U16	1820-0821	4	1	IC CNTR ECL BIN UP/DOWN SYNCHRO POS-EDGE	04713	MC10136L
A7A3U17	1810-0251	3	1	NETWORK-RES 10-SIP MULTI-VALUE	91637	CSC10C-00-SXX
A7A3U18	1820-0802	1	1	IC GATE ECL NOR QUAD 2-INP	04713	MC10102P
A7A3U19	1810-0204	6	1	NETWORK-RES 8-SIP 1.0K OHM X 7	11236	750-81
A7A3U20	1820-0806	5	1	IC GATE ECL OR-NOR DUAL 4-5-INP	04713	MC10109P
A7A3U21	1820-0820	3	1	IC FF ECL J-BAR K-BAR COM CLOCK DUAL	04713	MC10135L
A7A3U22	1810-0204	6	1	NETWORK-RES 8-SIP 1.0K OHM X 7	11236	750-81
A7A3U23	1820-0802	1	1	IC GATE ECL NOR QUAD 2-INP	04713	MC10102P
A7A3U24	0955-0063	0	1	U-WAVE MIXER 500 MHZ MAX	15542	SRA-1-32
A7A3VR1	1902-3082	9	1	DIODE-ZNR 4.64V 5% DO-35 PD=.4W	04713	
A7A3W1	85660-60083	7	1	CABLE ASSEMBLY WHITE/RED (INCLUDES J3)	28480	85660-60083
A7A3W2	85660-60085	9	1	CABLE ASSEMBLY GRAY/WHITE (INCLUDES J2)	28480	85660-60085

**Indicates factory-selected value*

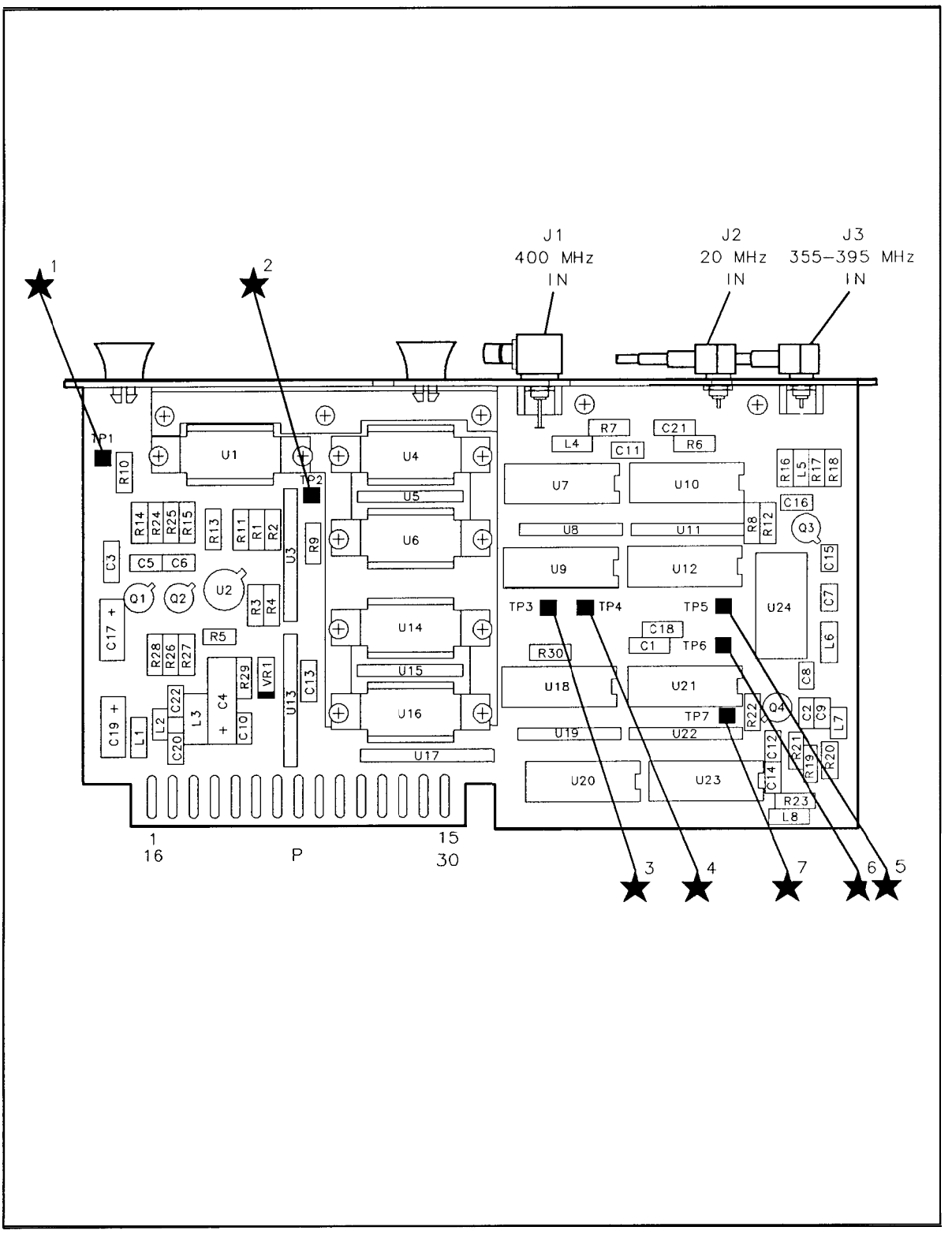

A7A3 M/N Phase Detector Component Locations, 85660-60136

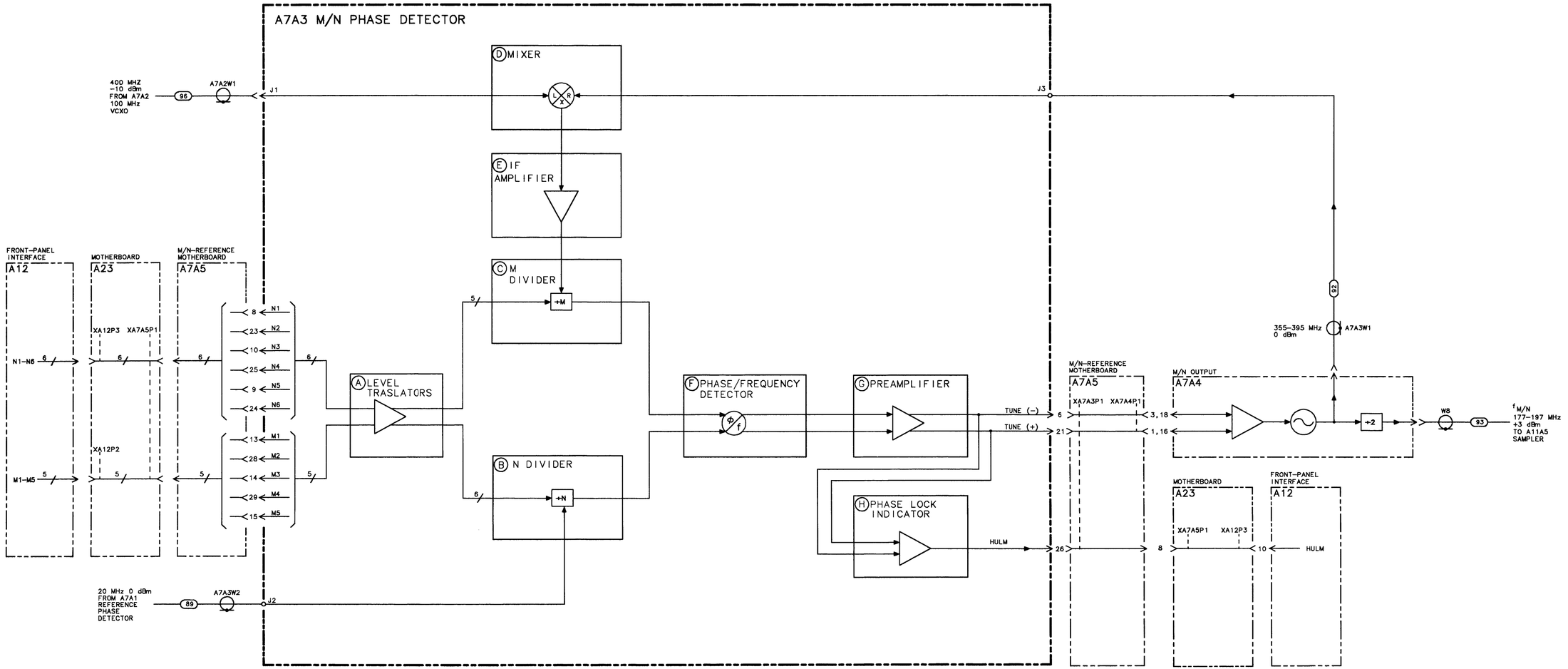

A7A3 M/N PHASE DETECTOR, BLOCK DIAGRAM

A7A3 M/N PHASE DETECTOR
85660-60136
(SERIAL PREFIX:2410A)

P1

PIN	SIGNAL	TO/FROM	FUNCTION BLOCK
1	-10V		I
16	-10V		I
2	+20V		I
17	+20V		I
3	-5.2V		I
18	-5.2V		I
4	GND		I
19	GND		I
5	GND		I
20	GND		I
6	VCO TUNE (-)	A7A4P1-3	G
21	VCO TUNE (+)	A7A4P1-1	G
7	GND		I
22	GND		I
8	N1	A12P3-4	A
23	N2	A12P3-19	A
9	N5	A12P3-2	A
24	N6	A12P3-17	A
10	N3	A12P3-3	A
25	N4	A12P3-18	A
11	NC		
26	MULM	A12P3-10	H
12	NC		
27	NC		
13	M1	A12P2-14	A
28	M2	A12P2-32	A
14	M3	A12P2-13	A
29	M4	A12P2-31	A
15	M5	A12P2-12	A
30	NC		

NOTES:

1. REFERENCE DESIGNATORS WITHIN THIS ASSEMBLY ARE ABBREVIATED. FOR COMPLETE REFERENCE DESIGNATION, PREFIX ABBREVIATION WITH ASSEMBLY DESIGNATION.
2. UNLESS OTHERWISE INDICATED: RESISTANCE IS IN OHMS, CAPACITANCE IS IN PICOFARADS(pF) INDUCTANCE IS IN MICROHENRIES(μH)
3. PIN CONFIGURATION FOR U5,U8,U11, U15,U19,U22:

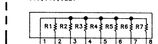

4. UNLESS OTHERWISE INDICATED: SIGNALS ENTER AT LEFT SIDE AND EXIT AT RIGHT SIDE OF FUNCTION BLOCKS.
5. MNEMONIC TABLE:

MNEMONIC	DESCRIPTION
MULM	HIGH=M/N UNLOCKED

A7A3

A7A3 M/N PHASE DETECTOR, SCHEMATIC DIAGRAM

A7A4

A7A4 M/N Output, Circuit Description

A7A4 amplifies the output of the A7A4A1 M/N VCO in two different paths. One path is amplification and buffering to drive the mixer in the M/N phase-lock loop. The other path drives a divide by two which, after further amplification, goes to the A11A5 Sampler.

The integrating loop amplifier which generates the tuning voltage for the M/N VCO is also included on A7A4.

LO Output Amplifier Ⓓ

Q5 is a common-emitter amplifier followed by a resistive pad to increase reverse isolation. Q2 is a common-base amplifier which is broadly tuned by L2, L10, and associated capacitances. Q1 is another common-emitter amplifier which is followed by a 400 MHz low-pass filter.

Divide By 2 Ⓕ

U2 is an ECL divide-by-2 Integrated Circuit. U2 generates the M/N output frequency which is one-half that of the M/N VCO. For frequency spans of greater than 5 MHz, the M/N control line (LMNE) goes to a TTL high during the sweep. This disables U2, switching off the M/N output to the A11A5 Sampler. At the beginning of each sweep, U2 is turned back on and the M/N VCO is phase-locked to give the correct start frequency. During multi-band sweeps, U2 is turned on at the beginning of each band, but is turned off during the actual sweep.

Loop Amplifier Ⓐ

U1 is connected as an integrating amplifier and generates -5 V to -35 V for tuning the M/N VCO. Cl3 is the integrating capacitor; Cl2 and Cl5 compensate U1 to guarantee stability. R33, R34, C14, and R15 compensate the entire phase-lock loop. The 200 kHz low pass filter rejects the sampling frequency (20 MHz divided by N) and its harmonics which are generated in the phase detector. CR6, R42, and R41 form an impedance breakpoint that increases the loop gain by approximately 5 dB when the tune voltage goes below approximately -7 V. This helps to make the varactor tuning curve linear.

For instruments with A7A4 M/N Output Assembly, part number 85660-60267, power for integrating amplifier U1 is provided by an additional +20 V connection (Pl-9, P24) and by Q10 which generates -15 V from the -40 V supply. The output of U1 is buffered by common-base amplifier Q8 and by emitter-follower buffer Q9.

Voltage-Controlled Oscillator Ⓑ

The M/N voltage-controlled oscillator (VCO) consists of a resonator A7A4A1A1 and Q2 with its associated circuitry. The oscillation frequency is determined by the bias on the varactors CR1 and CR2 which tunes the cavity resonator. Coarse tuning is provided by Cl, while C5 is used to vary the output coupling to the cavity thereby varying the output power. The impedance looking into the emitter of Q2 has a negative real part which provides the conditions necessary for oscillation to occur.

Buffer Amplifier Ⓒ

Q1 is a common-emitter buffer amplifier which provides at least 0 dBm output over the 355 to 395 MHz range of the VCO.

LO Amplifier Ⓔ

Q6 and Q7 form a buffer amplifier to assure that there is approximately 0 dBm to drive the ECL divide-by-2 IC (U2 in block Ⓕ). R24 and R25 set the proper dc level to drive U2.

M/N Output Amplifier Ⓖ

Q3 and Q4 provide buffering between the ECL divider U2 and the output.

A7A4 M/N Output, Troubleshooting

The VCO tune voltage from the A7A3 M/N Phase Detector is amplified and applied to the Voltage-Controlled Oscillator (VCO) by the loop amplifier. The VCO output is amplified, divided by two, and applied to the A11A5 Sampler for phase locking the A11A3 YIG-Tuned Oscillator (YTO) in 10 MHz increments. A portion of the VCO output provides feedback to the A7A3 Phase Detector for phase locking of the M/N Loop.

Spectrum analyzer control settings for A7A4 troubleshooting:

(2-22)
(SHIFT) (MKR⇒REF LVL) (KSR)
(SHIFT) (RES BW) (KSF)
(CENTER FREQUENCY) ..... 3.77 GHz
(FREQUENCY SPAN) ..... 0 Hz

Loop Amplifier Ⓐ

The tune voltage from the Loop Amplifier can be measured at TP1, located on the cover of the A7A4. The dc voltage at TP1, with the front panel settings indicated above, shoud be -14.2 V. If an unlocked condition exists, the voltage is approximately -0.5 V or -37.5 V. If the level is -0.5 V, the probable cause is no VCO output to the A7A3 Phase Detector. A level of -37.5 V indicates that the 20 MHz reference to the A7A3 Phase Detector is not present.

Voltage-Controlled Oscillator (VCO) Ⓑ and Buffer Amplifier Ⓒ

The VCO output frequency with the tuning voltage set to -14.2 V should be 380 MHz. Typical voltage levels for the VCO are as shown in Table 1.

Table 1. Typical VCO Voltage Levels

A7A4A1A2 Voltage Levels		
	Q2	**Q1**
Emitter	−7.0	−8.6
Base	−6.3	−7.9
Collector	−0.3	0.0

LO Output Amplifier Ⓓ

Table 2. Typical LO Output Amplifier Voltage Levels

A7A4A2 Voltage Levels			
	Q5	**Q2**	**Q1**
Emitter	-6.9	-6.7	-6.7
Base	-6.2	-6.2	-6.2
Collector	-0.5	0.0	0.0

LO Amplifier Ⓔ and M/N Output Amplifier Ⓖ

Table 3. Typical LO and M/N Output Amplifier Voltage Levels

A7A4A2 Voltage Levels				
	Q6	Q7	Q3	Q4
Emitter	-6.7	-3.1	-4.5	-5.2
Base	-6.2	-2.4	-3.8	-4.5
Collector	-2.4	-1.1	0.0	-2.3

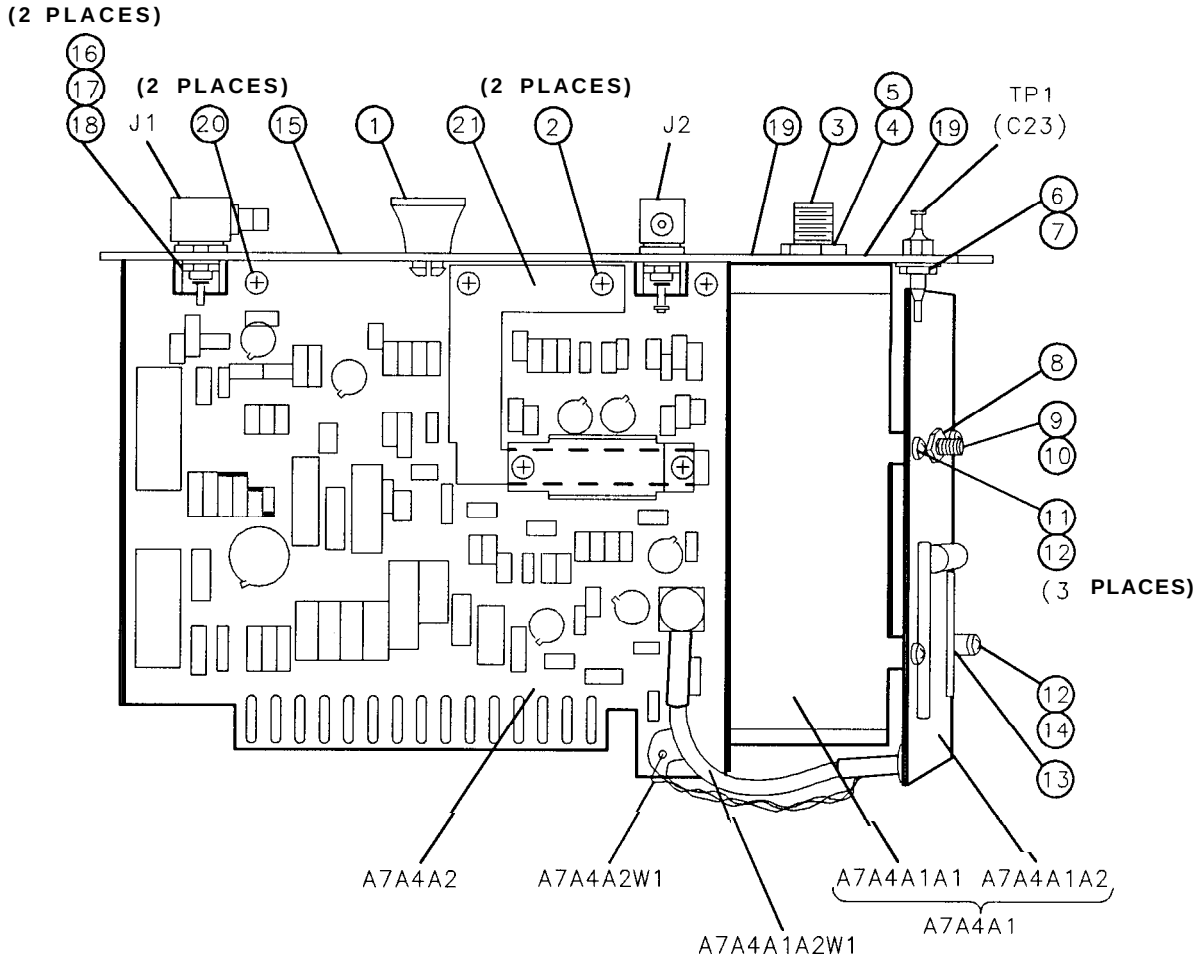

Figure 1. **A7A4** M/N Output Assembly, Parts Identification (1 of 2)

Item	HP Part Number	CD	Description	Mfr Code	Mfr Part Number
1	86701-40001	9	EXTRACTOR, PC BOARD	28480	86701-4000
2	2200-0101	0	SCREW, MACH, 4-40, .188-IN LG, PAN HD	28480	86701-2004
3	86701-20049	3	SCREW, TUNING, FREQ ADJUST	28480	86701-2004
4	2950-0078	9	NUT, HEX, 10-32 (FOR FREQ ADJUST (3))	28480	2950-0078
5	3050-0082	8	WASHER, FL NM, .116-IN ID (FOR (3))	28480	3050-0082
6	2580-0002	4	NUT, HEX, 8-32 (FOR C23)	28480	2580-0002
7	2190-0009	4	WASHER, LOCK, .168-IN ID FOR C23)	28480	2190-0009
8	2260-0002	6	NUT, HEX, 4-40 (FOR PWR ADJUST)	28480	2260-0002
9	86701-20046	0	PROBE, 4-40 THREAD (PWR ADJUST)	28480	86701-2004
10	86701-20047	1	SUPPORT-RESONATOR (FOR PROBE (9))	28480	86701-2004
11	0520-0128	7	SCREW, MACH, 2-56, .250-IN LG, PAN HD	28480	0520-0128
12	2190-0045	8	WASHER, LOCK, .088-IN ID (FOR SCREW (11))	28480	2190-0045
13	0380-0020	0	SPACER, .250-IN LG, .128-IN ID (FOR (14))	28480	0380-0020
14	0520-0133	4	SCREW, MACH, 2-56, .500-IN LG, PAN HD	28480	0520-0133
15	85660-20049	1	COVER, PC BOARD, (1714 M/N OUTPUT)	28480	85660-2004
16	2950-0078	9	NUT, HEX, 10-32 (FOR J1 AND J2)	28480	2950-0078
17	2190-0124	4	WASHER, LOCK, .195-IN ID (FOR J1 AND J2)	28480	2190-0124
18	85660-20068	4	GROUND LUG (FOR J1 AND J2)	28480	85660-20061
19	2200-0167	8	SCREW, MACH, 4-40, .375-IN LG, FLAT HD	28480	2200-0167
20	2200-0101	0	SCREW, MACH, 4-40, .188-IN LG, APN HD POZI	28480	2200-0101
21	85660-00065	9	IC HEAT SINK	28480	85660-0006

Figure 1. **A7A4** M/N Output Assembly, Parts Identification (2 of 2)

HP Part Number 85660-60113

A7A4 M/N Output

Reference Designation	HP Part Number	CD	Qty	Description	Mfr Code	Mfr Part Number
A7A4	35660-60113	4	1	M/N OUTPUT ASSEMBLY (SERIAL PREFIXES: 2410A - 2607A)	28480	85660-60113
A7A4A1	35660-60096	2	1	M/N VOLTAGE CONTROLLED OSCILLATOR ASSY (A COMPLETE PARTS LIST FOR THIS BOARD ASSY IS INCLUDED IN THIS SECTION)	28480	85660-60096
A7A4A1A1	35660-60112	3	1	M/N VOLTAGE CONTROLLED OSCILLATOR	28480	85660-60112
A7A4A1A2	35660-60018	8	1	M/N VCO BOARD ASSEMBLY (A COMPLETE PARTS LIST FOR THIS BOARD ASSY IS INCLUDED IN THIS SECTION)	28480	85660-60018
A7A4A2	35660-60192	9	1	M/N OUTPUT BOARD ASSEMBLY (SERIAL PREFIXES 2410A THROUGH 2449A) (A COMPLETE PARTS LIST FOR THIS BOARD ASSY IS INCLUDED IN THIS SECTION)	28480	85660-60192
				-OR-		
	35660-60239	5	1	M/N OUTPUT BOARD ASSEMBLY (SERIAL PREFIXES 2503A THROUGH 2607A) (A COMPLETE PARTS LIST FOR THIS BOARD ASSY IS INCLUDED IN THIS SECTION)	28480	85660-60239
A7A4MP1	2200-0168	9	2	SCREW-MACH 4-40 .438-IN-LG 82 DEG	77250	

**Indicates factory-selected value*

HP Part Number 85660-60267

A7A4 M/N Output

Reference Designation	HP Part Number	C D	Qty	Description	Mfr Code	Mfr Part Number
A7A4	35660-60267	9	1	M/N OUTPUT ASSEMBLY (SERIAL PREFIX: 2611A)	28480	85660-60267
A7A4A1	35660-60096	2	1	M/N VOLTAGE CONTROLLED OSCILLATOR ASSY (A COMPLETE PARTS LIST FOR THIS BOARD ASSY IS INCLUDED IN THIS SECTION)	28480	85660-60096
A7A4A1A1	35660-60112	3	1	M/N VOLTAGE CONTROLLED OSCILLATOR	28480	85660-60112
A7A4A1A2	35660-60018	8	1	M/N VCO BOARD ASSEMBLY (A COMPLETE PARTS LIST FOR THIS BOARD ASSY IS INCLUDED IN THIS SECTION)	28480	85660-60018
A7A4A2	35660-60266	8	1	M/N OUTPUT BOARD ASSEMBLY (A COMPLETE PARTS LIST FOR THIS BOARD ASSY IS INCLUDED IN THIS SECTION)	28480	85660-60266
A7A4MP1	2200-0168	9	2	SCREW-MACH 4-40 .438-IN-LG 82 DEG	77250	

**Indicates factory-selected value*

HP Part Number 85660-60096

A7A4A1 VCO Assembly

Reference Designation	HP Part Number	C D	Qty	Description	Mfr Code	Mfr Part Number
A7A4A1	35660-60096	2	1	M/N VOLTAGE CONTROLLED OSCILLATOR ASSEMBLY	28480	85660-60096
A7A4A1A1	35660-60112	3	1	M/N VOLTAGE CONTROLLED OSCILLATOR	28480	85660-60112
A7A4A1A2	35660-60018	8	1	M/N VCO BOARD ASSEMBLY (A COMPLETE PARTS LIST FOR THIS BOARD ASSY IS INCLUDED IN THIS SECTION)	28480	85660-60018
	1380-0020	0	1	SPACER .250-IN-LG .128-IN-ID		
	)520-0131	2	1	SCREW-MACH 2-56 .438-IN-LG PAN-HD-POZI	77250	
	1520-0174	3	3	SCREW-MACH 2-56 .250-IN-LG PAN-HD-PDZI		
	:190-0014	1	1	LOCK WASHER .089-IN-ID	78189	1902-00-00-2580.
	:260-0002	6	1	NUT-HEX 4-40		
	3050-0672	2	1	WASHER SH .118-IN-ID		
	36701-20046	0	1	PROBE		
	36701-20047	1	1	RESONATOR SUPPORT		

**Indicates factory-selected value*

HP Part Number 85660-60018

A7A4A1A2 M/N VCO Board

Reference Designation	HP Part Number	C. D	Qty	Description	Mfr Code	Mfr Part Number
A7A4A1A2	85660-60018	8	1	BOARD ASSEMBLY, M/N VCO	28480	85660-60018
A7A4A1A2C1	0160-3878	6	1	CAP-FXD 1000pF 100 V	04222	SR201C102MAAH
A7A4A1A2C2	0160-3878	6	1	CAP-FXD 1000pF 100 V	04222	SR201C102MAAH
A7A4A1A2C3	0160-3879	i	1	CAPACITOR-FXD .01UF +-20% 100VDC CER	04222	SR201C103MAAH
A7A4A1A2C4	0160-3878	6	1	CAP-FXO 1000pF 100 V	04222	SR201C102MAAH
A7A4A1A2C5	0180-1731	8	1	CAPACITOR-FXD 4.7UF+-10% 50VDC TA	56289	150D475X9050B2-DYS
A7A4A1A2C6	0160-3878	6	1	CAP-FXD 1000pF 100 V	04222	SR201C102MAAH
A7A4A1A2C7	0160-3878	6	1	CAP-FXD 1000pF 100 V	04222	SR201C102MAAH
A7A4A1A2C8	0160-3873	1	1	CAPACITOR-FXD 4.7PF +-.5PF 200VDC CER		FD12C0G2D4R7D
A7A4A1A2C9	0160-3878	6	1	CAP-FXO 1000pF 100 V	04222	SR201C102MAAH
A7A4A1A2C10	0160-3879	7	1	CAPACITOR-FXD .01UF +-20% 100VDC CER	04222	SR201C103MAAH
A7A4A1A2C11	0180-2161	C	1	CAPACITOR-FXD .75UF+-10% 50VDC TA	56289	150D754X9050A2-DYS
A7A4A1A2J2	1251-0600	C	1	CONNECTOR-SGL CONT PIN 1.14-MM-BSC-SZ SC	27264	16-06-0034
A7A4A1A2J3	1251-0600	C	1	CONNECTOR-SGL CONT PIN 1.14-MM-BSC-SZ SC	27264	16-06-0034
A7A4A1A2J4	1251-0600	C	1	CONNECTOR-SGL CONT PIN 1.14-MM-BSC-SZ SQ	27264	16-06-0034
A7A4A1A2L1	9135-0073	3	1	INDUCTOR RF-CH-MLD 51NH +-6.596% 2.6D-MM	06560	
A7A4A1A2L2	9100-0346	C	1	INDUCTOR RF-CH-MLD 50NH +-20% .105D-INX.	32159	1A5004M 20%
A7A4A1A2L3	86701-20051	7	1	INDUCTOR	28480	86701-20051
A7A4A1A2L4	9140-0158	6	1	INDUCTOR RF-CH-MLD 1UH +-10% .105D-INX.2	32159	1A1002M +-lo%
A7A4A1A2MP1				NOT ASSIGNED		
A7A4A1A2MP2	0590-0519	7	1	THREADED INSERT-NUT 4-40 .062-IN-LG STL	46384	KF2-440-ET
A7A4A1A2MP3	1251-2313	6	1	CONNECTOR-SGL CONT SKT .04-IN-BSC-SZ RND	00779	3-332070-5
A7A4A1A2MP4	3151-0013	4	1	WIRE 22AWG 1X22	92194	298
A7A4A1A2MP5	36701-20052	a	2	SPACER, INSULATOR	28480	86701-20052
A7A4A1A2Q1	1854-0686	0	1	TRANSISTOR NPN SI TO-72 PD=200MW FT=4GHZ	25403	
A7A4A1A2Q2	1854-0610	0	1	TRANSISTOR NPN SI TO-46 FT=800MHZ	04713	
A7A4A1A2R1	0757-0317	7	1	RESISTOR 1.33K +-1% .125W TF TC=O+-100	19701	SFR25H
A7A4A1A2R2	3698-7219	6	1	RESISTOR 196 +-1% .05W TF TC=O+-100	19701	50635
A7A4A1A2R3	0699-2029	8	1	RESISTOR 16.2 +-1% .05W TF TC=O+-100	91637	CMF-50-21
A7A4A1A2R4	3698-3154	0	1	RESISTOR 4.22K 1% .125W TF TC=O+-100	19701	SFR25H
A7A4A1A2R5	0757-0428	1	1	7ESISTOR 1.62K +-1% .125W TF TC=O+-100	19701	SFR25H
A7A4A1A2R6	0698-7262	9	1	RESISTOR 12.1K +-1% .05W TF TC=O+-100	19701	50635
A7A4A1A2R7	0757-0428	1	1	RESISTOR 1.62K +-1% .125W TF TC=O+-100	19701	SFR25H
A7A4A1A2R8	1698-7248	1	1	RESISTOR 3.16K +-1% .05W TF TC=O+-100	19701	50635
A7A4A1A2R9	1699-1903	5	1	RESISTOR 51.1 +-1% .05W TF TC=O+-100	91637	CMF-50-21
A7A4A1A2R10	1698-7265	2	1	RESISTOR 16.2K +-1% .05W TF TC=D+-100	19701	50635
A7A4A1A2R11	0698-7250	5	1	RESISTOR 3.83K +-1% .05W TF TC=O+-100	19701	50635
A7A4A1A2R12	0757-0401	0	1	RESISTOR 100 +-1% .125W TF TC=O+-100	19701	SFR25H
A7A4A1A2R13	0757-0400	9	1	RESISTOR 90.9 +-1% .125W TF TC=O+-100	19701	SFR25H
A7A4A1A2W1	85660-60118	9	1	CABLE ASSEMBLY, WHITE (INCLUDES J1)	28480	85660-60118
A7A4A1A2W2	86701-20050	6	1	JUMPER CABLE	28480	86701-20050

**Indicates factory-selected value*

HP Part Number 85660-60192

A7A4A2 M/N Output Board

Reference Designation	HP Part Number	CD	Qty	Description	Mfr Code	Mfr Part Number
A7A4A2	85660-60192	9	1	BOARD ASSEMBLY, M/N OUTPUT (SERIAL PREFIXES: 2410A - 2449A)	28480	85660-60192
A7A4A2C1	0160-3878	6	1	CAP-FXD 1000pF 100 V	04222	SR201C102MAAH
A7A4A2C2	0160-3878	6	1	CAP-FXD 1000pF 100 V	04222	SR201C102MAAH
A7A4A2C3	0160-3874	2	1	CAPACITOR-FXD 10PF +-.5PF LOOVDC CER		FD12C0G2D100D
A7A4A2C4	0160-3878	6	1	CAP-FXD 1000pF 100 V	04222	SR201C102MAAH
A7A4A2C5	0160-3878	6	1	CAP-FXD 1000pF 100 V	04222	SR201C102MAAH
A7A4A2C6	0160-3873	1	1	CAPACITOR-FXD 4.7PF +-.5PF LOOVDC CER	28480	0160-3873
A7A4A2C7	0160-3878	6	1	CAP-FXD 1000pF 100 V	04222	SR201C102MAAH
A7A4A2C8	0160-3873	1	1	CAPACITOR-FXD 4.7PF +-.5PF 200VDC CER		FD12C0G2D4R7D
A7A4A2C9	0160-3874	2	1	CAPACITOR-FXD 10PF +-.5PF 200VDC CER	28480	0160-3874
A7A4A2C10	0160-3872	0	1	CAPACITOR-FXD 2.2PF +-.25PF LOOVDC CER	28480	0160-3872
A7A4A2C11	0160-3874	2	1	CAPACITOR-FXD 10PF +-.5PF LOOVDC CER	28480	0160-3874
A7A4A2C12	0160-2261	9	1	CAPACITOR-FXD 15PF +-5% 500VDC CER 0+-30	52763	2RDPLX05015RNP0
A7A4A2C13	0160-2290	4	1	CAPACITOR-FXD .15UF +-10% 80VDC POLYE	84411	HEW-238T
A7A4A2C14	0160-2290	4	1	CAPACITOR-FXD .15UF +-10% 80VDC POLYE	84411	HEW-238T
A7A4A2C15	0140-0196	3	1	CAPACITOR-FXD 150PF +-5% 300VDC MICA	09023	CD15FD151J03
A7A4A2C16	0160-3878	6	1	CAP-FXD 1000pF 100 V	04222	SR201C102MAAH
A7A4A2C17	0160-3878	6	1	CAP-FXD 1000pF 100 V	04222	SR201C102MAAH
A7A4A2C18	0160-3874	2	1	CAPACITOR-FXO 10PF +-.5PF 200VDC CER	28480	0160-3874
A7A4A2C19	0160-3876	4	1	CAPACITOR-FXD 47PF +-20% LOOVDC CER	04222	SR202C470MAAH
A7A4A2C20	0160-3878	6	1	CAP-FXD 1000pF 100 V	04222	SR201C102MAAH
A7A4A2C21	0160-3878	6	1	CAP-FXD 1000pF 100 V	04222	SR201C102MAAH
A7A4A2C22	0160-3878	6	1	CAP-FXD 1000pF 100 V	04222	SR201C102MAAH
A7A4A2C23	0160-4351	2	1	CAPACITOR-FDTHRU 1000PF 20% 200V CER	33095	54-713-032-X5F-102M
A7A4A2C24	0160-0161	4	1	CAPACITOR-FXD .01UF +-10% 200VDC POLYE	84411	HEW-238M
A7A4A2C25	0160-0153	4	1	CAPACITOR-FXD 1000PF +-10% EOOVDC POLYE	84411	HEW-238M
A7A4A2C26	0160-0161	4	1	CAPACITOR-FXD .01UF +-10% EOOVDC POLYE	84411	HEW-238M
A7A4A2C27	0160-3534	1	1	CAPACITOR-FXD 510PF +-5% 100VDC MICA	09023	CD15FD511J03
A7A4A2C28	0160-0298	8	1	CAPACITOR-FXD 1500PF +-10% 200VDC POLYE	84411	HEW-238M
A7A4A2C29	0180-0197	8	1	CAPACITOR-FXD 2.2UF+-10% 2OVDC TA	56289	150D225X9020A2-DYS
A7A4A2C30	0160-3878	6	1	CAP-FXD 1000pF 100 V	04222	SR201C102MAAH
A7A4A2C31	0180-0197	8	1	CAPACITOR-FXD 2.2UF+-10% 20VDC TA	56289	150D225X9020A2-DYS
A7A4A2C33	0160-3878	6	1	CAP-FXD 1000pF 100 V	04222	SR201C102MAAH
A7A4A2C34	0160-3878	6	1	CAP-FXD 1000pF 100 V	04222	SR201C102MAAH
A7A4A2C35	0160-3878	6	1	CAP-FXD 1000pF 100 V	04222	SR201C102MAAH
A7A4A2CR3	1901-0040	1	1	DIODE-SWITCHING 30V 50MA 2NS DO-35	71468	
A7A4A2CR4	1901-0040	1	1	DIODE-SWITCHING 30V 50MA 2NS DO-35	71468	
A7A4A2J1	1250-0657	5	1	CONNECTOR-RF SMB M SGL-HOLE-FR 50-OHM	28480	1250-0657
A7A4A2J2	1250-0657	5	1	CONNECTOR-RF SMB M SGL-HOLE-FR 50-OHM	28480	1250-0657
A7A4A2J3	1250-0257	1	1	CONNECTOR-RF SMB M PC 50-OHM	98291	51-051-0169-226
A7A4A2L1	9100-2891	4	1	INDUCTOR RF-CH-MLD 50NH +-10% .105D-INX.	24226	10M050K-1
A7A4A2L2	9100-2891	4	1	INDUCTOR RF-CH-ML0 50NH +-10% .105D-INX.	24226	10M050K-1
A7A4A2L3	9100-2891	4	1	INDUCTOR RF-CH-MLD 50NH 10% .105DX.26LG	24226	10M050K-1
A7A4A2L4	9100-2891	4	1	INDUCTOR RF-CH-MLD 50NH 10% .105DX.26LG	24226	10M050K-1
A7A4A2L5	9100-2891	4	1	INDUCTOR RF-CH-ML0 50NH +-10% .105D-INX.	24226	10M050K-1
A7A4A2L6	9100-1634	1	1	INDUCTOR RF-CH-ML0 75UH +-5% .166D-INX.3	99800	1537-70

**Indicates factory-selected value*

HP Part Number 85660-60192

A7A4A2 M/N Output Board

Reference Designation	HP Part Number	C-D	Qty	Description	Mfr Code	Mfr Part Number
A7A4A2L7	9100-1635	2	1	INDUCTOR RF-CH-MLD 91UH +-5% .166D-INX.3	9980(	1537-74
A7A4A2L8	9100-1620	5	1	INDUCTOR RF-CH-MLD 15UH +-10% .166D-INX.	9980C	1537-40
A7A4A2L9	9140-0210	1	1	INDUCTOR RF-CH-ML0 100UH +-5% .166D-INX.	9980C	1537-76
A7A4A2L10	9100-2891	4	1	INDUCTOR RF-CH-MLD 50NH +-10% .105D-INX.	2422E	10M050K-1
A7A4A2L11	9100-2891	4	1	INDUCTOR RF-CH-MLD 50NH +-10% .105D-INX.	24226	10M050K-1
A7A4A2L12	9100-2891	4	1	INDUCTOR RF-CH-MLD 50NH 10% .105DX.26LG	28480	9100-2891
A7A4A2L13	3100-2891	4	1	INDUCTOR RF-CH-MLD 50NH 10% .105DX.26LG	28480	9100-2891
A7A4A2L14	3140-0144	0	1	INDUCTOR RF-CH-MLD 4.7UH +-10% .105D-INX	99800	1025-36
A7A4A2MP3	2190-0009	4	1	JASHER-LK INTL T NO. 8 .168-IN-ID	28480	2190-0009
A7A4A2MP4	2190-0124	4	4	JASHER-LK INTL T NO. 10 .195-IN-ID	28480	2190-0124
A7A4A2MP5	2200-0101	0	2	SCREW-MACH 4-40 .188-IN-LG PAN-HD-POZI	00000	ORDER BY DESCRIPTION
A7A4A2MP6	2580-0002	4	1	NUT-HEX-DBL-CHAM 8-32-THD .085-IN-THK	2848(	2580-0002
A7A4A2MP7	2950-0078	C	2	NUT-HEX-DBL-CHAM 10-32-THD .067-IN-THK	28481	2950-0078
A7A4A2MP8	3050-0082	E	2	WASHER-FL NM NO. 4 .116-IN-ID .188-IN-OD	2848(	3050-0082
A7A4A2MP11	85660-20049	1	1	COVER PC, M/N OUTPUT	2848C	85660-20049
A7A4A2MP12	85660-20068	4	2	GROUND LUG	2848C	85660-20068
A7A4A2MP13	86701-40001	9	1	EXTRACTOR PC	2848C	86701-40001
A7A4A2MP14	2200-0103	2	2	SCREW-MACH 4-40 .25-IN-LG PAN-HO-POZI	77250	
A7A4A2MP15	0520-0128	7	2	SCREW-MACH 2-56 .25-IN-LG PAN-HD-POZI	77250	
A7A4A2MP17	1205-0285	a	1	HEAT SINK SGL DIP (COVERING U2)	28480	1205-0285
A7A4A2MP18	35660-00065	9	1	I.C. HEAT SINK	28480	85660-00065
A7A4A2MP19	2190-0890	1	2	JASHER-LK HLCL NO. 2 .088-IN-ID	28480	2190-0890
A7A4A2Q1	1854-0546	1	1	TRANSISTOR NPN SI TO-72 PD=200MW	28480	1854-0546
A7A4A2Q2	1854-0345	8	1	TRANSISTOR NPN 2N5179 SI TO-72 PD=200MW	04713	2N5179
A7A4A2Q3	1854-0345	8	1	TRANSISTOR NPN 2N5179 SI TO-72 PD=200MW	04713	2N5179
A7A4A2Q4	1854-0345	8	1	TRANSISTOR NPN 2N5179 SI TO-72 PD=200MW	04713	2N5179
A7A4A2Q5	1854-0546	1	1	TRANSISTOR NPN SI TO-72 PD=200MW	28480	1854-0546
A7A4A2Q6	1854-0686	0	1	TRANSISTOR NPN SI TO-72 PD=200MW FT=4GHZ	25403	
A7A4A2Q7	1854-0345	8	1	TRANSISTOR NPN 2N5179 SI TO-72 PD=200MW	04713	215179
A7A4A2R1	0698-7212	3	1	RESISTOR 100 +-1% .05W TF TC=O+-100	19701	50635
A7A4A2R2	0698-7248	1	1	RESISTOR 3.16K +-1% .05W TF TC=O+-100	19701	50635
A7A4A2R3	0698-7243	6	1	RESISTOR 1.96K +-1% .05W TF TC=O+-100	19701	50635
A7A4A2R4	1698-7205	3	1	RESISTOR 51.1 +-1% .05W TF TC=O+-100	19701	50635
A7A4A2R5	0698-7223	2	1	RESISTOR 287 +-1% .05W TF TC=O+-100	19701	50635
A7A4A2R6	0698-7248	I	1	RESISTOR 3.16K +-1% .05W TF TC=O+-100	19701	50635
A7A4A2R7	3698-7243	6	1	RESISTOR 1.96K +-1% .05W TF TC=O+-100	19701	50635
A7A4A2R8	3757-0316	6	1	RESISTOR 42.2 +-1% .125W TF TC=O+-100	19701	SFR25H
A7A4A2R9	3698-7221	0	1	RESISTOR 237 +-1% .05W TF TC=O+-100	19701	50635
A7A4A2R10	3698-7188	8	1	RESISTOR 10 +-1% .05W TF TC=O+-100	19701	50635
A7A4A2R11	1698-7212	9	1	RESISTOR 100 +-1% .05W TF TC=O+-100	19701	50635
A7A4A2R12	1757-0394	0	1	RESISTOR 51.1 +-1% .125W TF TC=O+-100	19701	SFR25H
A7A4A2R13	1698-7212	9	1	RESISTOR 100 +-1% .05W TF TC=O+-100	19701	50635
A7A4A2R14	1757-1094	9	1	RESISTOR 1.47K +-1% .125W TF TC=O+-100	19701	SFR25H
A7A4A2R15	0757-1094	9	1	RESISTOR 1.47K +-1% .125W TF TC=O+-100	19701	SFR25H
A7A4A2R16	0757-1094	9	1	RESISTOR 1.47K +-1% .125W TF TC=O+-100	19701	SFR25H
A7A4A2R17	0757-1094	9	1	RESISTOR 1.47K +-1% .125W TF TC=O+-100	19701	SFR25H
A7A4A2R18	0698-7260	7	1	RESISTOR 10K +-1% .05W TF TC=O+-100	19701	50635
A7A4A2R19	1698-7248	1	1	RESISTOR 3.16K +-1% .05W TF TC=O+-100	19701	50635

Indicates factory-selected value

HP Part Number 85660-60192

A7A4A2 M/N Output Board

Reference Designation	HP Part Number	C D	Qty	Description	Mfr Code	Mfr Part Number
A7A4A2R20	0698-7222	1	1	RESISTOR 261 1% .05W F TC=O+-100	24546	C3-1/8-TO-261R-F
A7A4A2R21	0698-7223	2	1	RESISTOR 287 +-1% .05W TF TC=0+-100	19701	50635
A7A4A2R22	0698-7188	8	1	RESISTOR 10 +-1% .05W TF TC=O+-100	19701	50635
A7A4A2R23	0698-7229	8	1	RESISTOR 511 +-1% .05W TF TC=0+-100	19701	50635
A7A4A2R24	0698-7219	6	1	RESISTOR 196 1% .05W F TC=O+-100	24546	C3-1/8-TO-196R-F
A7A4A2R25	0698-7239	0	1	RESISTOR 1.33K 1% .05W F TC=O+-100	24546	C3-1/8-TO-1331-F
A7A4A2R26	0698-7243	6	1	RESISTOR 1.96K +-1% .05W TF TC=O+-100	19701	50635
A7A4A2R27	0698-7248	1	1	RESISTOR 3.16K +-1% .05W TF TC=O+-100	19701	50635
A7A4A2R28	0698-7229	8	1	RESISTOR 511 +-1% .05W TF TC=O+-100	19701	50635
A7A4A2R29	0698-7243	6	1	RESISTOR 1.96K +-1% .05W TF TC=O+-100	19701	50635
A7A4A2R30	0698-7200	5	1	RESISTOR 31.6 1% .05W F TC=O+-100	24546	C3-1/8-TO-31R6-F
A7A4A2R31	0698-7224	3	1	RESISTOR 316 1% .05W F TC=O+-100	24546	C3-1/8-TO-316R-F
A7A4A2R32	0698-7188	8	1	RESISTOR 10 +-1% .05W TF TC=O+-100	19701	50635
A7A4A2R33	0757-0280	3	1	RESISTOR 1K +-1% .125W TF TC=O+-100	19701	SFR25H
A7A4A2R34	0757-0279	0	1	RESISTOR 3.16K +-1% .125W TF TC=O+-100	19701	SFR25H
A7A4A2R35	0698-7223	2	1	RESISTOR 287 1% .05W TC=O+-100	19701	50635
A7A4A2R36	0698-7210	7	1	RESISTOR 82.5 +-1% .05W TF TC=O+-100	19701	50635
A7A4A2R37	0698-7257	2	1	RESISTOR 7.5K +-1% .05W TF TC=O+-100	19701	50635
A7A4A2R38	0698-7260	7	1	RESISTOR 10K +-1% .05W TF TC=O+-100	19701	50635
A7A4A2R39	0698-7229	8	1	RESISTOR 511 +-1% .05W TF TC=O+-100	19701	50635
A7A4A2U1	1826-0059	2	1	IC OP AMP GP TO-99 PKG	27014	LM201AH
A7A4A2U2	1820-2106	2	1	IC FF ECL D-M/S POS-EDGE-TRIG	07263	F11C06DC
A7A4A2VR1	1902-3070	5	1	DIODE-ZNR 4.22V 5% DO-35 PD=.4W	04713	
A7A4A2VR2	1902-3070	5	1	DIODE-ZNR 4.22V 5% DO-35 PD=.4W	04713	
A7A4A2W1	85660-60103	2	1	JUMPER ASSEBMLY	28480	85660-60103

**Indicates factory-selected value*

HP Part Number 85660-60239

A7A4A2 M/N Output Board

Reference Designation	HP Part Number	C D	Qty	Description	Mfr Code	Mfr Part Number
A7A4A2	85660-60239	5	1	BOARD ASSEMBLY, M/N OUTPUT (SERIAL PREFIXES: 2503A - 2607A)	28480	85660-60239
A7A4A2C1	0160-3878	6	1	CAP-FXD 1000pF 100 V	04222	SR201C102MAAH
A7A4A2C2	0160-3878	6	1	CAP-FXD 1000pF 100 V	04222	SR201C102MAAH
A7A4A2C3	0160-3874	2	1	CAPACITOR-FXD 10PF +-.5PF 200VDC CER		FD12C0G2D100D
A7A4A2C4	0160-3878	6	1	CAP-FXD 1000pF 100 V	04222	SR201C102MAAH
A7A4A2C5	0160-3878	6	1	CAP-FXD 1000pF 100 V	04222	SR201C102MAAH
A7A4A2C6	0160-4383	0	1	CAPACITOR-FXD 6.8PF +-.5PF 200VDC CER		FD12C0G2D6R8D
A7A4A2C7	0160-3878	6	1	CAP-FXD 1000pF 100 V	04222	SR201C102MAAH
A7A4A2C8	0160-3873	1	1	CAPACITOR-FXD 4.7PF +-.5PF 200VDC CER		FD12C0G2D4R7D
A7A4A2C9	0160-4491	1	1	CAP-FXD 8.2pF 200 V		FD12C0G2D8R2J
A7A4A2C10	0160-4490	0	1	CAPACITOR-FXO 1.8PF +-.25PF 200VDC CER		FD12C0G2D1R8C
A7A4A2C12	0160-2261	9	1	CAPACITOR-FXD 15PF +-5% 500VDC CER 0+-30	52763	2RDPLX05015RNP0
A7A4A2C13	0160-2290	4	1	CAPACITOR-FXD .15UF +-10% 80VDC POLYE	84411	HEW-238T
A7A4A2C14	0160-2290	4	1	CAPACITOR-FXD .15UF +-10% 80VDC POLYE	84411	HEW-238T
A7A4A2C15	0140-0196	3	1	CAPACITOR-FXD 150PF +-5% 300VDC MICA	09023	CD15FD151J03
A7A4A2C16	0160-3878	6	1	CAP-FXD 1000pF 100 V	04222	SR201C102MAAH
A7A4A2C17	0160-3878	6	1	CAP-FXD 1000pF 100 V	04222	SR201C102MAAH
A7A4A2C18	0160-4389	6	1	CAP-FXD 100pF 200 V	04222	SR202A101JAAH
A7A4A2C19	0160-3876	4	1	CAPACITOR-FXD 47PF +-20% 200VOC CER	04222	SR202C470MAAH
A7A4A2C20	0160-3878	6	1	CAP-FXD 1000pF 100 V	04222	SR201C102MAAH
A7A4A2C21	0160-3878	6	1	CAP-FXD 1000pF 100 V	04222	SR201C102MAAH
A7A4A2C22	0160-3878	6	1	CAP-FXD 1000pF 100 V	04222	SR201C102MAAH
A7A4A2C23	0160-4351	2	1	CAPACITOR-FDTHRU 1000PF 20% 200V CER	33095	54-713-032-X5F-102M
A7A4A2C24	0160-0161	4	1	CAPACITOR-FXD .01UF +-10% 200VDC POLYE	84411	HEW-238M
A7A4A2C25	0160-0153	4	1	CAPACITOR-FXD 1000PF +-10% 200VDC POLYE	84411	HEW-238M
A7A4A2C26	0160-0161	4	1	CAPACITOR-FXD .01UF +-10% 200VOC POLYE	84411	HEW-238M
A7A4A2C27	0160-3534	1	1	CAPACITOR-FXD 510PF +-5% 100VDC MICA	09023	CD15FD511J03
A7A4A2C28	0160-0298	8	1	CAPACITOR-FXD 1500PF +-10% 200VDC POLYE	84411	HEW-238M
A7A4A2C29	0180-0197	8	1	CAPACITOR-FXD 2.2UF+-10% 20VDC TA	56289	150D225X9020A2-DYS
A7A4A2C30	0160-3878	6	1	CAP-FXD 1000pF 100 V	04222	SR201C102MAAH
A7A4A2C31	0180-0197	8	1	CAPACITOR-FXD 2.2UF+-10% 20VDC TA	56289	150D225X9020A2-DYS
A7A4A2C33	0160-3878	6	1	CAP-FXD 1000pF 100 V	04222	SR201C102MAAH
A7A4A2C34	0160-3878	6	1	CAP-FXD 1000pF 100 V	04222	SR201C102MAAH
A7A4A2C35	0160-3878	6	1	CAP-FXD 1000pF 100 V	04222	SR201C102MAAH
A7A4A2CR3	1901-0040	1	1	DIODE-SWITCHING 30V 50MA 2NS DO-35	71468	
A7A4A2CR4	1901-0040	1	1	DIODE-SWITCHING 30V 50MA 2NS DO-35	71468	
A7A4A2J1	1250-0690	6	1	CONNECTOR-RF SMB M SGL-HOLE-FR 50-OHM	98291	51-047-4610
A7A4A2J2	1250-2112	1	1	CONNECTOR-RF SMB M SGL-HOLE-FR 50-OHM	98291	051-047-0259-220
A7A4A2J3	1250-0257	1	1	CONNECTOR-RF SMB M PC 50-OHM	98291	51-051-0169-226
A7A4A2L1	9100-2891	4	1	INDUCTOR RF-CH-MLD 50NH +-10% .105D-INX.	24226	10M050K-1
A7A4A2L2	9100-2891	4	1	INDUCTOR RF-CH-MLD 50NH +-10% .105D-INX.	24226	10M050K-1
A7A4A2L3	9135-0073	3	1	INDUCTOR RF-CH-MLD 51NH +-6.596% 2.6D-MM	06560	
A7A4A2L4	9100-2891	4	1	INDUCTOR RF-CH-MLD 50NH +-10% .105D-INX.	24226	10M050K-1
A7A4A2L6	9100-1634	1	1	INDUCTOR RF-CH-MLD 75UH +-5% .166D-INX.3	99800	1537-70
A7A4A2L7	9100-1635	2	1	INDUCTOR RF-CH-MLD 91UH +-5% .166D-INX.3	99800	1537-74
A7A4A2L8	9100-1620	5	1	INDUCTOR RF-CH-MLD 15UH +-10% .166D-INX.	99800	1537-40

**Indicates factory-selected value*

HP Part Number 85660-60239

A7A4A2 M/N Output Board

Reference Designation	HP Part Number	C D	Qty	Description	Mfr Code	Mfr Part Number
A7A4A2L9	9140-0210	1	1	INDUCTOR RF-CH-MLD 100UH +-5% .166D-INX.	99800	1537-76
A7A4A2L10	9100-2891	2	1	INDUCTOR RF-CH-MLD 50NH +-10% .105D-INX.	24226	10M050K-1
A7A4A2L11	9100-2891	2	1	INDUCTOR RF-CH-MLD 50NH +-10% .105D-INX.	24226	10M050K-1
A7A4A2L12	9135-0079	9	1	INDUCTOR 100NH +-5.5% 2.6D-MMX6.6LG-MM	24226	10M0100X-1
A7A4A2L13	9135-0073	3	1	INDUCTOR RF-CH-MLD 51NH +-6.596% 2.6D-MM	06560	
A7A4A2L14	9140-0144	0	1	INDUCTOR RF-CH-MLD 4.7UH +-10% .105D-INX	99800	1025-36
A7A4A2MP1				NOT ASSIGNED		
A7A4A2MP3	2190-0009	4	1	WASHER-LK INTL T NO. 8 .168-IN-ID	OG791	820-BC
A7A4A2MP4	2190-0124	4	1	WASHER-LK INTL T NO. 10 .195-IN-ID	98291	3002-26
A7A4A2MP5	2200-0101	0	2	SCREW-MACH 4-40 .188-IN-LG PAN-HD-POZI	77250	
A7A4A2MP6	2580-0002	4	1	NUT-HEX-DBL-CHAM 8-32-THD .085-IN-THK	80120	
A7A4A2MP7	2950-0078	9	2	NUT-HEX-DBL-CHAM IO-32-THD .067-IN-THK	74163	500220
A7A4A2MP8	3050-0082	8	1	WASHER-FL NM NO. 4 .116-IN-ID .188-IN-OD	76854	8942-3
A7A4A2MP11	85660-20049	1	1	COVER PC, M/N OUTPUT	28480	85660-20049
A7A4A2MP12	85660-20068	4	2	GROUND LUG	28480	85660-20068
A7A4A2MP13	86701-40001	9	1	EXTRACTOR PC	28480	86701-40001
A7A4A2MP14	2200-0103	2	2	SCREW-MACH 4-40 .25-IN-LG PAN-HO-POZI	77250	
A7A4A2MP15	0520-0128	7	2	SCREW-MACH 2-56 .25-IN-LG PAN-HD-POZI	77250	
A7A4A2MP16	0590-0533	5	2	THREADED INSERT-NUT 2-56 .06-IN-LG SST	46384	KFS2-256
A7A4A2MP17	1205-0285	0	1	HEAT SINK SGL DIP-COVERING U2	13103	6007A-TOP
A7A4A2MP18	85660-00065	9	1	I.C. HEAT SINK	28480	85660-00065
A7A4A2MP19	2190-0112	0	2	WASHER-LK HLCL NO. 2 .088-IN-ID	77339	
A7A4A2Q1	1854-0345	8	1	TRANSISTOR NPN 2N5179 SI TO-72 PD=200MW	04713	2N5179
A7A4A2Q2	1854-0345	8	1	TRANSISTOR NPN 2N5179 SI TO-72 PD=200MW	04713	2N5179
A7A4A2Q3	1854-0345	8	1	TRANSISTOR NPN 2N5179 SI TO-72 PD=200MW	04713	2N5179
A7A4A2Q4	1854-0345	8	1	TRANSISTOR NPN 2N5179 SI TO-72 PD=200MW	04713	2N5179
A7A4A2Q5	1854-0345	8	1	TRANSISTOR NPN 2N5179 SI TO-72 PD=200MW	04713	2N5179
A7A4A2Q6	1854-0686	0	1	TRANSISTOR NPN SI TO-72 PD=200MW FT=4GHZ	25403	
A7A4A2Q7	1854-0345	8	1	TRANSISTOR NPN 2N5179 SI TO-72 PD=200MW	04713	2N5179
A7A4A2R1	0698-7212	9	1	RESISTOR 100 +-1% .05W TF TC=O+-100	19701	50635
A7A4A2R2	0698-7248	1	1	RESISTOR 3.16K +-1% .05W TF TC=O+-100	19701	50635
A7A4A2R3	0698-7243	6	1	RESISTOR 1.96K +-1% .05W TF TC=O+-100	19701	50635
A7A4A2R4	0698-7205	0	1	RESISTOR 51.1 +-1% .05W TF TC=O+-100	19701	50635
A7A4A2R5	0698-7223	2	1	RESISTOR 287 +-1% .05W TF TC=O+-100	19701	50635
A7A4A2R6	0698-7248	1	1	RESISTOR 3.16K +-1% .05W TF TC=O+-100	19701	50635
A7A4A2R7	0698-7243	6	1	RESISTOR 1.96K +-1% .05W TF TC=O+-100	19701	50635
A7A4A2R8	0757-0316	6	1	RESISTOR 42.2 +-1% .125W TF TC=O+-100	19701	SFR25H
A7A4A2R9	0698-7221	0	1	RESISTOR 237 +-1% .05W TF TC=O+-100	19701	50635
A7A4A2R10	0698-7188	3	1	RESISTOR 10 +-1% .05W TF TC=O+-100	19701	50635
A7A4A2R11	0698-7212	3	1	RESISTOR 100 +-1% .05W TF TC=O+-100	19701	50635
A7A4A2R12	0757-0394	0	1	RESISTOR 51.1 +-1% .125W TF TC=O+-100	19701	SFR25H
A7A4A2R13	0698-7212	9	1	RESISTOR 100 +-1% .05W TF TC=O+-100	19701	50635
A7A4A2R14	0757-1094	9	1	RESISTOR 1.47K +-1% .125W TF TC=O+-100	19701	SFR25H
A7A4A2R15	0757-1094	9	1	RESISTOR 1.47K +-1% .125W TF TC=O+-100	19701	SFR25H
A7A4A2R16	0757-1094	9	1	RESISTOR 1.47K +-1% .125W TF TC=O+-100	19701	SFR25H
A7A4A2R17	0757-1094	9	1	RESISTOR 1.47K +-1% .125W TF TC=O+-100	19701	SFR25H
A7A4A2R18	0698-7260	7	1	RESISTOR 10K +-1% .05W TF TC=O+-100	19701	50635
A7A4A2R19	3698-7248	1	1	RESISTOR 3.16K +-1% .05W TF TC=O+-100	19701	50635

Indicates factoy-selected value

HP Part Number 85660-60239

A7A4A2 M/N Output Board

Reference Designation	HP Part Number	C D	Qty	Description	Mfr Code	Mfr Part Number
A7A4A2R20	3698-7223	2	1	RESISTOR 287 +-1% .05W TF TC=O+-100	19701	50635
A7A4A2R21	3698-7223	2	1	RESISTOR 287 +-1% .05W TF TC=O+-100	19701	50635
A7A4A2R22	3698-7188	8	1	RESISTOR 10 +-1% .05W TF TC=O+-100	19701	50635
A7A4A2R23	3698-7229	8	1	RESISTOR 511 +-1% .05W TF TC=O+-100	19701	50635
A7A4A2R24	3698-7212	9	1	RESISTOR 100 +-1% .05W TF TC=O+-100	19701	50635
A7A4A2R25	)698-7221	0	1	RESISTOR 237 +-1% .05W TF TC=O+-100	19701	50635
A7A4A2R26	1698-7243	6	1	RESISTOR 1.96K +-1% .05W TF TC=O+-100	19701	50635
A7A4A2R27	1698-7248	1	1	RESISTOR 3.16K +-1% .05W TF TC=O+-100	19701	50635
A7A4A2R28	1698-7229	8	1	RESISTOR 511 +-1% .05W TF TC=O+-100	19701	50635
A7A4A2R29	)698-7243	6	1	RESISTOR 1.96K +-1% .05W TF TC=O+-100	19701	50635
A7A4A2R30	)698-7195	7	1	RESISTOR 19.6 +-1% .05W TF TC=O+-100	19701	50635
A7A4A2R31	)698-7227	6	1	RESISTOR 422 +-1% .05W TF TC=O+-100	19701	50635
A7A4A2R32	)698-7188	8	1	RESISTOR 10 +-1% .05W TF TC=O+-100	19701	50635
A7A4A2R33	)757-0280	3	1	RESISTOR 1K +-1% .125W TF TC=O+-100	19701	SFR25H
A7A4A2R34	)757-0279	0	1	RESISTOR 3.16K +-1% .125W TF TC=O+-100	19701	SFR25H
A7A4A2R35	)698-7223	2	1	RESISTOR 287 +-1% .05W TF TC=O+-100	19701	50635
A7A4A2R36	)698-7210	7	1	RESISTOR 82.5 +-1% .05W TF TC=O+-100	19701	50635
A7A4A2R37	1698-7257	2	1	RESISTOR 7.5K +-1% .05W TF TC=O+-100	19701	50635
A7A4A2R38	1698-7260	7	1	RESISTOR 10K +-1% .05W TF TC=O+-100	19701	50635
A7A4A2R39	)698-7229	8	1	RESISTOR 511 +-1% .05W TF TC=O+-100	19701	50635
A7A4A2U1	826-0059	2	1	IC OP AMP GP TO-99 PKG	27014	LM201AH
A7A4A2U2	820-3485	2	1	IC PRESCR ECL	04713	MC12090L
A7A4A2U2	820-2106	2	0	ALTERNATE FOR 1820-3485	07263	F11C06DC
A7A4A2VR1	902-3070	5	1	DIODE-ZNR 4.22V 5% DO-35 PD=.4W	04713	
A7A4A2VR2	902-3070	5	1	DIODE-ZNR 4.22V 5% DO-35 PD=.4W	04713	
A7A4A2W1	5660-60103	2	1	JUMPER ASSEBMLY	28480	85660-60103

**Indicates factory-selected value*

HP Part Number 85660-60266

A7A4A2 M/N Output Board

Reference Designation	HP Part Number	C. (C)	Qty	Description	Mfr Code	Mfr Part Number
A7A4A2	85660-60266	8	1	BOARD ASSEMBLY, M/N OUTPUT (SERIAL PREFIX: 2611A)	28480	85660-60266
A7A4A2C1	0160-3878	6	1	CAP-FXD 1000pF 100 V	04222	SR201C102MAAH
A7A4A2C2	0160-3878	6	1	CAP-FXD 1000pF 100 V	04222	SR201C102MAAH
A7A4A2C3	0160-3874	2	1	CAPACITOR-FXD 10PF +-.5PF 200VDC CER		FD12C0G2D100D
A7A4A2C4	0160-3878	6	1	CAP-FXD 1000pF 100 V	04222	SR201C102MAAH
A7A4A2C5	0160-3878	6	1	CAP-FXD 1000pF 100 V	04222	SR201C102MAAH
A7A4A2C6	0160-4383	C	1	CAPACITOR-FXD 6.8PF +-.5PF 200VDC CER		FD12C0G2D6R8D
A7A4A2C7	0160-3878	6	1	CAP-FXD 1000pF 100 V	04222	SR201C102MAAH
A7A4A2C8	0160-3873	1	1	CAPACITOR-FXD 4.7PF +-.5PF 200VDC CER		FD12C0G2D4R7D
A7A4A2C9	0160-4491	1	1	CAP-FXD 8.2pF 200 V		FD12C0G2D8R2J
A7A4A2C10	0160-4490	c	1	CAPACITOR-FXD 1.8PF +-.25PF 200VDC CER		FD12C0G2D1R8C
A7A4A2C12	0160-2261	9	1	CAPACITOR-FXD 15PF +-5% 5OOVDC CER 0+-30	52763	2RDPLX05015RNP0
A7A4A2C13	0160-2290	4	1	CAPACITOR-FXD .15UF +-10% 80VDC POLYE	a4411	HEW-23aT
A7A4A2C14	3160-2290	4	1	CAPACITOR-FXD .15UF +-10% 80VDC POLYE	a4411	HEW-23aT
A7A4A2C15	3140-0196	3	1	CAPACITOR-FXD 150PF +-5% 300VDC MICA	09023	CD15FD151J03
A7A4A2C16	3160-3878	6	1	CAP-FXD 1000pF 100 V	04222	SR201C102MAAH
A7A4A2C17	0160-3878	6	1	CAP-FXD 1000pF 100 V	04222	SR201C102MAAH
A7A4A2C18	0160-4389	6	1	CAP-FXD 100pF 200 V	04222	SR202A101JAAH
A7A4A2C19	0160-3876	4	1	CAPACITOR-FXD 4JPF +-20% 200VDC CER	04222	SR202C470MAAH
A7A4A2C20	0160-3878	6	1	CAP-FXD 1000pF 100 V	04222	SR201C102MAAH
A7A4A2C21	0160-3878	6	1	CAP-FXD 1000pF 100 V	04222	SR201C102MAAH
A7A4A2C22	0160-3878	6	1	CAP-FXD 1000pF 100 V	04222	SR201C102MAAH
A7A4A2C23	1160-4351	2	1	CAPACITOR-FDTHRU 1000PF 20% 200V CER	33095	54-713-032-X5F-102M
A7A4A2C24	1160-0161	4	1	CAPACITOR-FXD .01UF +-10% 200VDC POLYE	a4411	HEW-23aM
A7A4A2C25	1160-0153	4	1	CAPACITOR-FXD 1000PF +-10% 200VDC POLYE	a4411	HEW-23aM
A7A4A2C26	0160-0161	4	1	CAPACITOR-FXD .01UF +-10% 200VDC POLYE	a4411	HEW-23aM
A7A4A2C27	1160-3534	1	1	CAPACITOR-FXD 510PF +-5% 100VDC MICA	09023	CD15FD511J03
A7A4A2C28	0160-0298	8	1	CAPACITOR-FXD 1500PF +-10% 200VDC POLYE	84411	HEW-23aM
A7A4A2C29	0180-0197	8	1	CAPACITOR-FXD 2.2UF+-10% 20VDC TA	56289	150D225X9020A2-DYS
A7A4A2C30	0160-3878	6	1	CAP-FXD 1000pF 100 V	04222	SR201C102MAAH
A7A4A2C31	0180-0197	8	1	CAPACITOR-FXD 2.2UF+-10% 20VDC TA	56289	150D225X9020A2-DYS
A7A4A2C33	0160-3878	6	1	CAP-FXD 1000pF 100 V	04222	SR201C102MAAH
A7A4A2C34	0160-3878	6	1	CAP-FXD 1000pF 100 V	04222	SR201C102MAAH
A7A4A2C35	0160-3878	6	1	CAP-FXD 1000pF 100 V	04222	SR201C102MAAH
A7A4A2C36	0180-0291	3	1	CAPACITOR-FXD 1UF+-10% 35VDC TA	56289	150D105X9035A2-DYS
A7A4A2C37	0160-3878	6	1	CAP-FXD 1000pF 100 V	04222	SR201C102MAAH
A7A4A2C38	0180-0630	4	1	CAP-FXD 4.7uF 50 V TA	56289	19901123
A7A4A2CR3	1901-0040	1	1	DIODE-SWITCHING 30V 50MA 2NS DO-35	71468	
A7A4A2CR4	1901-0040	1	1	DIODE-SWITCHING 30V 50MA 2NS DO-35	71468	
A7A4A2CR5	1901-1098	1	1	DIODE-SWITCHING IN4150 50V 200MA 4NS	71466	
A7A4A2CR6	1901-0518	3	1	DIODE-SCHOTTKY SM SIG		5082-2800
A7A4A2CR7	1901-1098	1	1	DIODE-SWITCHING 1N4150 50V 200MA 4NS	71468	
A7A4A2J1	1250-0690	5	1	CONNECTOR-RF SMB M SGL-HOLE-FR 50-OHM	98291	51-047-4610
A7A4A2J2	1250-2112	1	1	CONNECTOR-RF SMB M SGL-HOLE-FR 50-OHM	98291	051-047-0259-220
A7A4A2J3	1250-0257	1	1	CONNECTOR-RF SMB M PC 50-OHM	98291	51-051-0169-226
A7A4A2L1	9100-2891	4	1	INDUCTOR RF-CH-MLD 50NH +-10% .105D-INX.	24226	10M050K-1

**Indicates factory-selected value*

HP Part Number 85660-60266

A7A4A2 M/N Output Board

Reference Designation	HP Part Number	C.	Qty	Description	Mfr Code	Mfr Part Number
A7A4A2L2	9100-2891	4	1	INDUCTOR RF-CH-MLD 50NH +-10% .105D-INX.	24226	10M050K-1
A7A4A2L3	*9135-0073*	3	1	INDUCTOR RF-CH-MLD 51NH +-6.596% 2.6D-MM	06560	
A7A4A2L4	9100-2891	4	1	INDUCTOR RF-CH-MLD 50NH +-lo% .105D-INX.	24226	10M050K-1
A7A4A2L6	9100-1634	1	1	INDUCTOR RF-CH-MLD 75UH +-5% .166D-INX.3	99800	*1537-70*
A7A4A2L7	9100-1635	2	1	INDUCTOR RF-CH-MLD 91UH +-5% .166D-INX.3	99800	*1537-74*
A7A4A2L8	9100-1620	5	1	INDUCTOR RF-CH-MLD 15UH +-10% .166D-INX.	99800	*1537-40*
A7A4A2L9	9140-0210	1	1	INDUCTOR RF-CH-MLD 100UH +-5% .166D-INX.	99800	*1537-76*
A7A4A2L10	9100-2891	4	1	INDUCTOR RF-CH-MLD 50NH +-10% .105D-INX.	24226	10M050K-1
A7A4A2L11	9100-2891	4	1	INDUCTOR RF-CH-MLD 50NH +-10% .105D-INX.	24226	10M050K-1
A7A4A2L12	*9135-0079*	9	1	INDUCTOR 100NH +-5.5% 2.6D-MMX6.6LG-MM	24226	10M0100X-1
A7A4A2L13	*9135-0073*	3	1	INDUCTOR RF-CH-MLD 51NH +-6.596% 2.6D-MM	06560	
A7A4A2L14	9140-0144	0	1	INDUCTOR RF-CH-MLD 4.7UH +-10% .105D-INX	99800	1025-36
A7A4A2L15	9100-1641	0	1	INDUCTOR RF-CH-MLD 240UH +-5% .166D-INX.	99800	*1537-94*
A7A4A2MP1				YOT ASSIGNED		
A7A4A2MP3	2190-0009	4	1	WASHER-LK INTL T NO. a .168-IN-ID	0G791	820-BC
A7A4A2MP4	2190-0124	4	4	WASHER-LK INTL T NO. 10 .195-IN-ID	98291	3002-26
A7A4A2MP5	2200-0101	0	2	SCREW-MACH 4-40 .188-IN-LG PAN-HD-POZI	*77250*	
A7A4A2MP6	2580-0002	4	1	IUT-HEX-DBL-CHAM a-32-THD .085-IN-THK	a0120	
A7A4A2MP7	2950-0078	9	2	IUT-HEX-DBL-CHAM 10-32-THD.067-IN-THK	*74163*	500220
A7A4A2MP8	3050-0082	8	1	JASHER-FL NM NO. 4 .116-IN-ID .188-IN-OD	*76654*	8942-3
A7A4A2MP11	85660-20049	1	1	COVER PC, M/N OUTPUT	28480	85660-20049
A7A4A2MP12	85660-20068	4	2	GROUND LUG	28480	85660-20068
A7A4A2MP13	86701-40001	9	1	EXTRACTOR PC	28480	86701-40001
A7A4A2MP14	2200-0103	2	2	SCREW-MACH 4-40 .25-IN-LG PAN-HD-POZI	*77250*	
A7A4A2MP15	0520-0128	7	2	SCREW-MACH 2-56 .25-IN-LG PAN-HD-POZI	*77250*	
A7A4A2MP16	0590-0533	5	2	THREADED INSERT-NUT 2-56 .06-IN-LG SST	46384	KFS2-256
A7A4A2MP17	1205-0285	0	1	HEAT SINK SGL DIP-COVERING U2	13103	6007A-TOP
A7A4A2MP18	85660-00065	3	1	.C. HEAT SINK	28480	85660-00065
A7A4A2MP19	2190-0112	0	2	IASHER-LK HLCL NO. 2 .Oaa-IN-ID	*77339*	
A7A4A2Q1	1854-0345	8	1	TRANSISTOR NPN 2N5179 SI *TO-72* PD=200MW	*04713*	2N5179
A7A4A2Q2	1854-0345	3	1	TRANSISTOR NPN 2N5179 SI *TO-72* PD=200MW	*04713*	2N5179
A7A4A2Q3	1854-0345	3	1	TRANSISTOR NPN 2N5179 SI *TO-72* PD=200MW	*04713*	2N5179
A7A4A2Q4	1854-0345	3	1	TRANSISTOR NPN 2N5179 SI *TO-72* PD=200MW	*04713*	2N5179
A7A4A2Q5	1854-0345	3	1	TRANSISTOR NPN 2N5179 SI *TO-72* PD=200MW	*04713*	2N5179
A7A4A2Q6	1854-0686	0	1	TRANSISTOR NPN SI *TO-72* PD=200MW FT=4GHZ	25403	
A7A4A2Q7	1854-0345	3	1	TRANSISTOR NPN 2N5179 SI *TO-72* PD=200MW	*04713*	2N5179
A7A4A2Q8	1853-0451	5	1	TRANSISTOR PNP 2N3799 SI TO-la PD=360MW	*04713*	
A7A4A2Q9	1853-0451	5	1	TRANSISTOR PNP 2N3799 SI TO-la PD=360MW	*04713*	
A7A4A2Q10	1853-0281	9	1	TRANSISTOR PNP 2N2907A SI TO-la PD=400MW	*04713*	2N2907A
A7A4A2R1	0698-7212	3	1	RESISTOR 100 +-1% .05W TF TC=O+-100	19701	50635
A7A4A2R2	0698-7248	1	1	RESISTOR 3.16K +-1% .05W TF TC=O+-100	19701	50635
A7A4A2R3	0698-7243	6	1	RESISTOR 1.96K +-1% .05W TF TC=O+-100	*19701*	50635
A7A4A2R4	0698-7205	0	1	RESISTOR 51.1 +-1% .05W TF TC=O+-100	19701	50635
A7A4A2R5	0698-7223	2	1	RESISTOR 287+-1%.05W TF TC=O+-100	*19701*	50635
A7A4A2R6	0698-7248	1	1	RESISTOR 3.16K +-1% .05W TF TC=O+-100	*19701*	50635
A7A4A2R7	0698-7243	6	1	RESISTOR 1.96K +-1% .05W TF TC=O+-100	19701	50635
A7A4A2R8	*0757-0316*	6	1	RESISTOR 42.2 +-1% .125W TF TC=O+-100	19701	SFR25H
A7A4A2R9	0698-7221	0	1	RESISTOR *237* +-1% .05W TF TC=O+-100	*19701*	50635

Indicates factory-selected value

HP Part Number 85660-60266

A7A4A2 M/N Output Board

Reference Designation	HP Part Number	C D	Qty	Description	Mfr Code	Mfr Part Number
A7A4A2R10	0698-7188	8	1	RESISTOR 10 +-1% .05W TF TC=0+-100	19701	50635
A7A4A2R11	0698-7212	9	1	RESISTOR 100 +-1% .05W TF TC=0+-100	19701	50635
A7A4A2R12	0757-0394	0	1	RESISTOR 51.1 +-1% .125W TF TC=0+-100	19701	SFR25H
A7A4A2R13	0698-7212	9	1	RESISTOR 100 +-1% .05W TF TC=0+-100	19701	50635
A7A4A2R14	0757-1094	9	1	RESISTOR 1.47K +-1% .125W TF TC=0+-100	19701	SFR25H
A7A4A2R15	0757-1094	9	1	RESISTOR 1.47K +-1% .125W TF TC=0+-100	19701	SFR25H
A7A4A2R16	0757-1094	9	1	RESISTOR 1.47K +-1% .125W TF TC=0+-100	19701	SFR25H
A7A4A2R17	0757-1094	9	1	RESISTOR 1.47K +-1% .125W TF TC=0+-100	19701	SFR25H
A7A4A2R18	0698-7260	7	1	RESISTOR 10K +-1% .05W TF TC=0+-100	19701	50635
A7A4A2R19	0698- 7248	1	1	RESISTOR 3.16K +-1% .05W TF TC=0+-100	19701	50635
A7A4A2R20	0698-7223	2	1	RESISTOR 287 +-1% .05W TF TC=0+-100	19701	50635
A7A4A2R21	0698-7223	2	1	RESISTOR 287 +-1% .05W TF TC=0+-100	19701	50635
A7A4A2R22	0698-7188	a	1	RESISTOR 10 +-1% .05W TF TC=0+-100	19701	50635
A7A4A2R23	0698-7229	a	1	RESISTOR 511 +-1% .05W TF TC=0+-100	19701	50635
A7A4A2R24	0698-7212	9	1	RESISTOR 100 +-1% .05W TF TC=0+-100	19701	50635
A7A4A2R25	0698-7221	0	1	RESISTOR 237 +-1% .05W TF TC=0+-100	19701	50635
A7A4A2R26	0698- 7243	6	1	RESISTOR 1.96K +-1% .05W TF TC=0+-100	19701	50635
A7A4A2R27	0698-7248	1	1	RESISTOR 3.16K +-1% .05W TF TC=0+-100	19701	50635
A7A4A2R28	0698-7229	a	1	RESISTOR 511 +-1% .05W TF TC=0+-100	19701	50635
A7A4A2R29	0698- 7243	6	1	RESISTOR 1.96K +-1% .05W TF TC=0+-100	19701	50635
A7A4A2R30	0698-7195	7	1	RESISTOR 19.6 +-1% .05W TF TC=0+-100	19701	50635
A7A4A2R31	0698-7227	6	1	RESISTOR 422 +-1% .05W TF TC=0+-100	19701	50635
A7A4A2R32	0698-7188	a	1	RESISTOR 10 +-1% .05W TF TC=0+-100	19701	50635
A7A4A2R33	0757-0280	3	1	RESISTOR 1K +-1% .125W TF TC=0+-100	19701	SFR25H
A7A4A2R34	0757-0279	0	1	RESISTOR 3.16K +-1% .125W TF TC=0+-100	19701	SFR25H
A7A4A2R35	0698-7223	2	1	RESISTOR 287 +-1% .05W TF TC=0+-100	19701	50635
A7A4A2R36	0698-7210	7	1	RESISTOR 82.5 +-1% .05W TF TC=0+-100	19701	50635
A7A4A2R37	0698- 7257	2	1	RESISTOR 7.5K +-1% .05W TF TC=0+-100	19701	50635
A7A4A2R38	0698- 7260	7	1	RESISTOR 10K +-1% .05W TF TC=0+-100	19701	50635
A7A4A2R39	0698-7229	8	1	RESISTOR 511 +-1% .05W TF TC=0+-100	19701	50635
A7A4A2R40	0757-0440	7	1	RESISTOR 7.5K +-1% .125W TF TC=0+-100	19701	SFR25H
A7A4A2R41	0757-0199	3	1	RESISTOR 21.5K +-1% .125W TF TC=0+-100	19701	SFR25H
A7A4A2R42	0698- 7263	3	1	RESISTOR 13.3K +-1% .05W TF TC=0+-100	19701	50635
A7A4A2R43	0698-7277	6	1	RESISTOR 51.1K +-1% .05W TF TC=0+-100	19701	5023R
A7A4A2R44	0687-4721	6	1	RESISTOR 4.7K 10% .5W CC TC=0+647	01121	EB4721
A7A4A2R45	0698-7260	7	1	RESISTOR 10K +-1% .05W TF TC=0+-100	19701	50635
A7A4A2R46	0757-0447	4	1	RESISTOR 16.2K +-1% .125W TF TC=0+-100	19701	SFR25H
A7A4A2R47	0698-7188	3	1	RESISTOR 10 +-1% .05W TF TC=0+-100	19701	50635
A7A4A2R48	3757-0280	3	1	RESISTOR 1K +-1% .125W TF TC=0+-100	19701	SFR25H
A7A4A2U1	1826-0059	2	1	IC OP AMP GP TO-99 PKG	27014	LM201AH
A7A4A2U2	1820-3485	2	1	IC PRESCR ECL	04713	MC12090L
A7A4A2VR1	1902-3070	5	1	DIODE-ZNR 4.22V 5% DO-35 PD=.4W	04713	
A7A4A2VR2	1902-3070	5	1	DIODE-ZNR 4.22V 5% DO-35 PD=.4W	04713	
A7A4A2W1	35660-60103	-	1	JUMPER WIRE ASSEMBLY	28480	85660-60103

**Indicates factory-selected value*

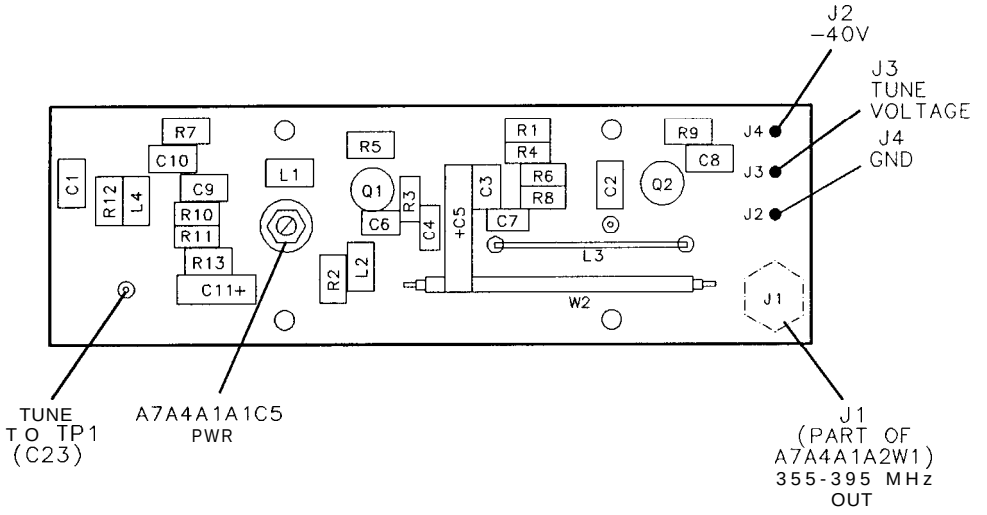

A7A4A1A2 M/N VCO Board Component Locations, 85660-60018

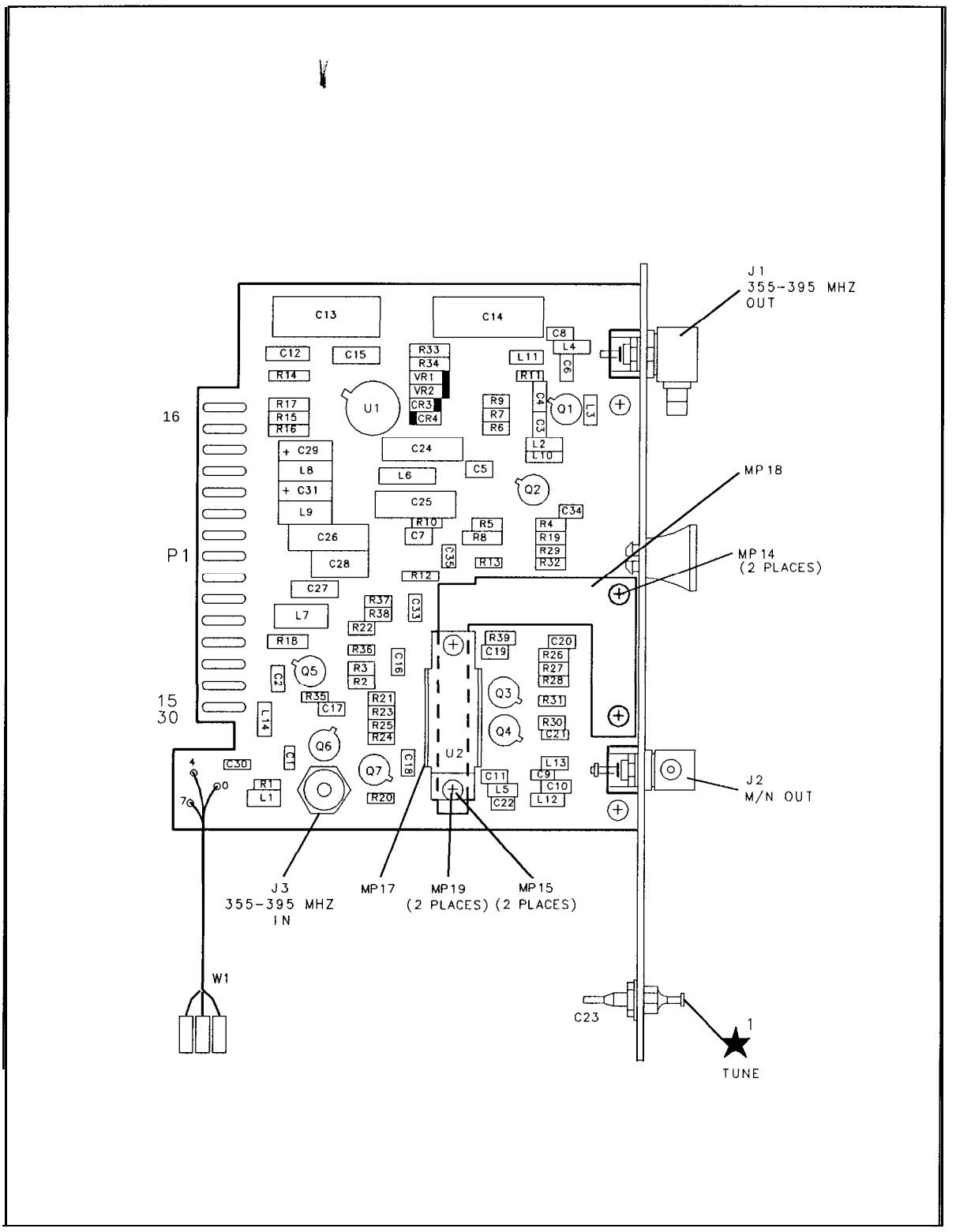

A7A4A2 M/N Output Board Component Locations, 85660-60192

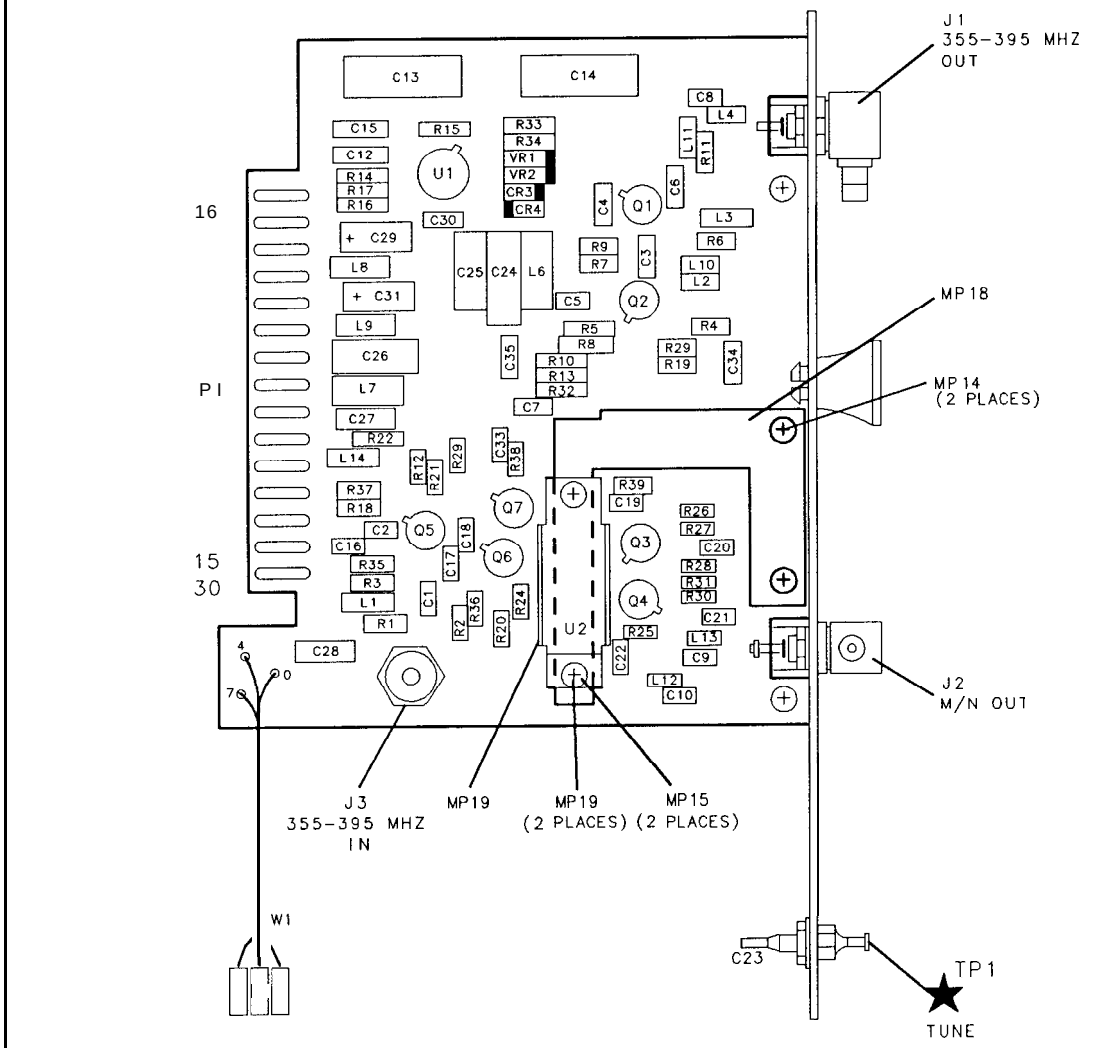

A7A4A2 M/N Output Board Component Locations, 85660-60239

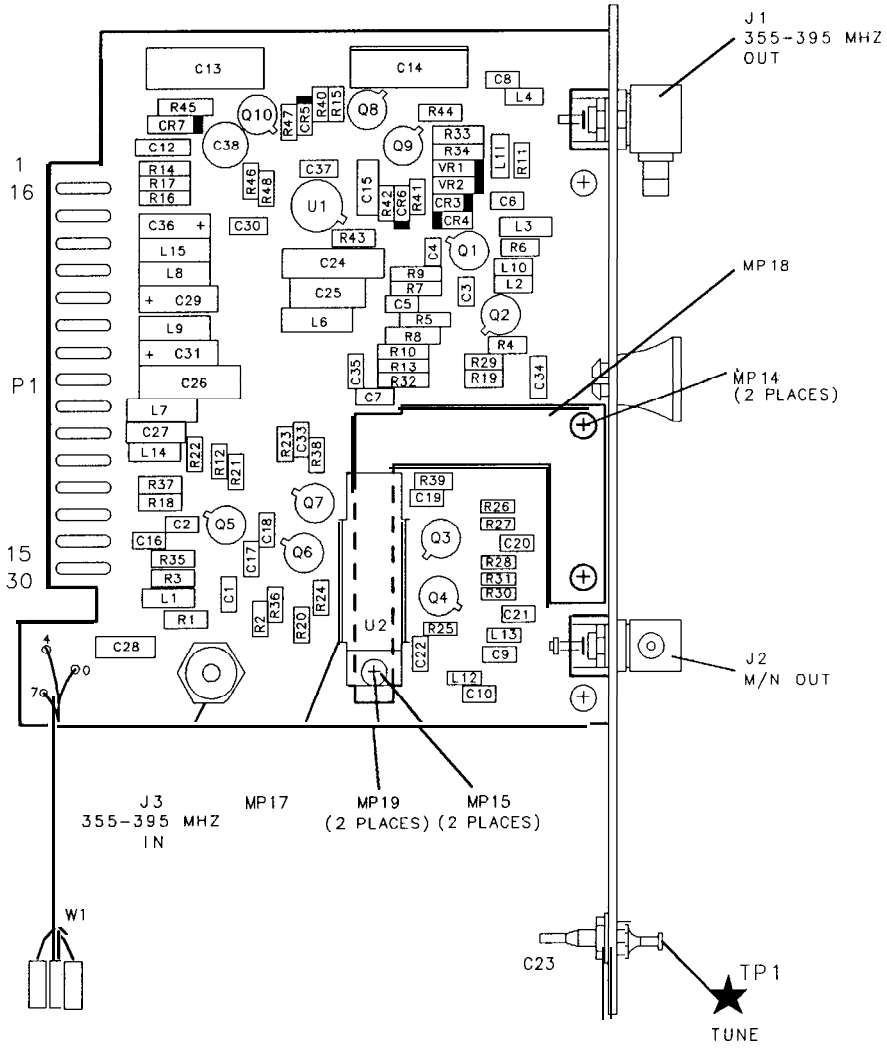

A7A4A2 M/N Output Board Component Locations, 85660-60266

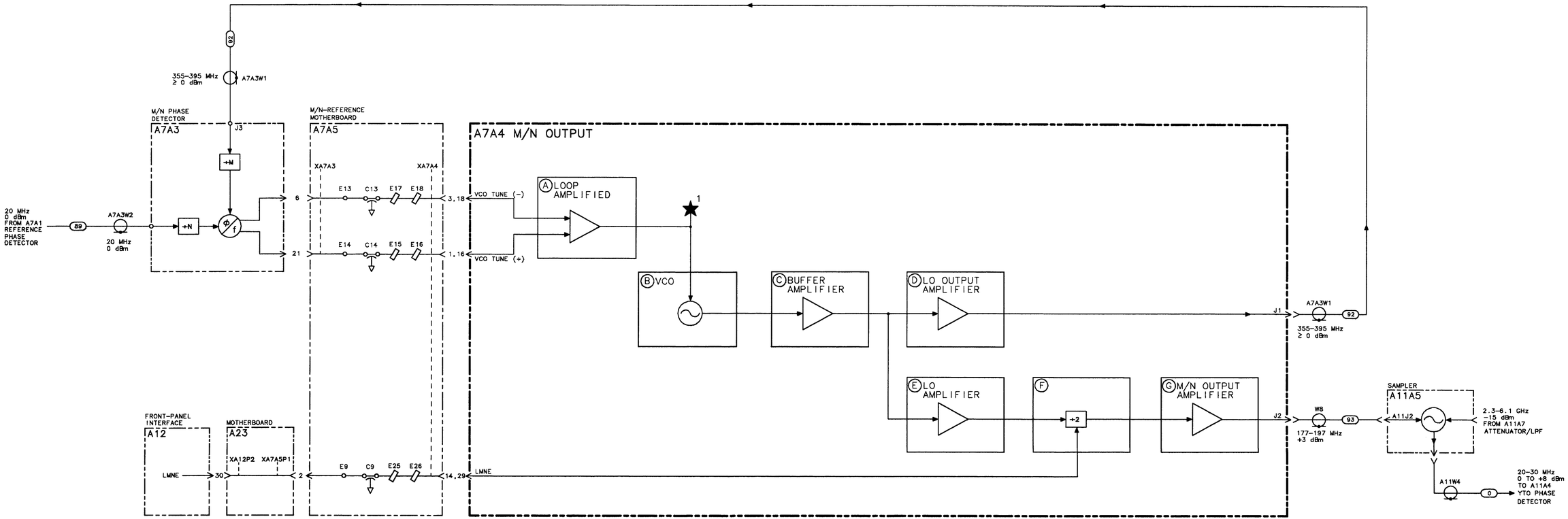

A7A4 M/N OUTPUT, BLOCK DIAGRAM

A7A4 M/N OUTPUT ASSEMBLY 85660-60113 (SERIAL PREFIXES: 2410A–2607A)

A7A4A2 M/N OUTPUT BOARD 85660-60192 (SERIAL PREFIXES: 2410A–2449A) 85660-60239 (SERIAL PREFIXES: 2503A–2607A)

P1

PIN	SIGNAL	TO/FROM	FUNCTION BLOCK
1	VCO TUNE (+)	A7A3P1-21	A
16	VCO TUNE (+)	A7A3P1-21	A
2	GND		H
17	GND		H
3	VCO TUNE (–)	A7A3P1-6	A
15	VCO TUNE (–)	A7A3P1-6	A
4	GND		H
19	GND		
5	–10V		
20	–10V		
6	GND		
21	GND		
7	–5.2V		
22	–5.2V		
8	GND		
23	GND		
9	GND		
24	GND		
10	GND		
25	GND		
11	GND		
26	GND		
12	–40V		
27	–40V		
13	GND		
28	GND		H
14	LMNE	A12P2–30	F
29	LMNE	A12P2–30	F
15	GND		H
30	GND		H

Ⓐ LOOP AMPLIFIER

P1–3,18 VCO TUNE (–)
P1–1,16 VCO TUNE (+)
C12 15 PF
C13 .15
R14 1470
C15 150PF
R16 1470
R17 1470
U1
R15 1470 .15
C14 .15
–40V NC
R33 1000
R34 3180
VR1 4.22V
VR2 4.22V
CR4 CR3
200 KHZ LPF
C25 1000pF
L6 .75
C27 510pF
L7 .91
C24 .01
C26 .01
C28 1500pF
A7A4AZW1
A
D
T
–40V

Ⓗ POWER SUPPLIES

P1–2,4,6,8–11, 13,15,17,18, 21,23–26,30
GND
P1–7,22 –5.2V
L9 100
C31 2.2
–5VF
P1–5,20 –10V
L8 15
R22 10
C29 2.2
C16 1000pF
–10VF1
–10VF2
P1–12,27 –40V
L14 4.7
C30 1000pF
–40VF

A7A4A1 M/N VOLTAGE CONTROLLED OSCILLATOR (VCO) ASSEMBLY 85660-60096

A7A4A1A2 M/N VCO BOARD 85660-60018

J3
J4
J2
L4 1.0
C10 .01
–40V

Ⓑ VOLTAGE–CONTROLLED OSCILLATOR

R13 90.9
C1 1000pF
R12 100
C11 .75
RESONATOR HOUSING
A7A4A1A1 M/N VCO 85660–60112
L1 1.0
L2 1.0
CR1
CR2
C2 3.9pF
C3 3.9pF
C4 NOTE 3
FREQ ADJ
C1 NOTE 5
C5 NOTE 4
PWR
C8 4.7pF
R9 51.1
C2 1000pF
L3 30nH
R6 12.1K
C7 1000pF
C5 4.7
C3 .01
R8 3160
R1 1330
R4 4220
–40VF

Ⓒ BUFFER AMPLIFIER

R3 196
L2 50nH
C6 1000pF
W2
Q1
L1 51nH
R2 18.2
C9 1000pF
R5 1620
C8 1000pF
R10 18.2K
R7 1620
R11 3830
–40VF
J1
355–395 MHz 0dBm
A7A4A1AZW1

C23 1000pF
TUNE
1 (COVER TEST POINT)

Ⓓ LO OUTPUT AMPLIFIER

J3
C1 1000pF
L1 50nH
R1 100
R7 3160
R36 82.5
R3 196Ω
R35 287
–10VF2
Q5
R12 51.1
C35 1000pF
C2 1000pF
R13 100
R8 42.2
R5 287
Q2
C34 1000pF
R28 196Ω
R4 51.1
R10 10
C5 1000pF
–10VF1
C7 1000pF
L2 50nH
C3 10pF
L10 50nH
R6 3160
L3 NOTE 8
Q1
R7 1960
R11 100
C8 NOTE 8
C9 237
L11 .05
L4 .05
C6 1.7pF
400 MHZ LPF
J1
CABLE 92, A7A3W1 355–395 MHz 3.5dBm TO A7A3 M/N PHASE DETECTOR

Ⓔ LO AMPLIFIER (85660–60192) NOTE 8

R20 261
Q7
R24 196
Q6
C18 10pF
C17 1000pF
R23 511
R21 287
R25 1330
–10VF2

Ⓕ DIVIDE BY 2

U2
NC
R18 10K
R32 7500
R38 10K
–5VF
R39 511
C33 1000pF
P1–14,29 LMNE

Ⓖ M/N OUTPUT AMPLIFIER (85660–60192) NOTE 8

C19 47pF
R26 1960
Q3
L12 50nH
C22 1000pF
C10 2.2pF
L13 50nH
C9 10pF
J2
CABLE 93, WB 177–197 MHz +3dBm TO A11A5 SAMPLER
Q4
C11 10pF
250 MHZ LPF
R27 3160
R28 511
R31 316
R30 31.6
C20 1000pF
R32 10
C21 1000pF
–10VF1

Ⓔ LO AMPLIFIER (85660–60239) NOTE 8

R20 287
Q7
R24 100
Q6
C18 1000pF
C17 1000pF
R23 511
R21 287
–10VF2

Ⓖ M/N OUTPUT AMPLIFIER (85660–60239) NOTE 8

C19 47pF
R26 1960
Q3
R25 237
L12 100nH
C22 1000pF
C10 1.8pF
L13 51nH
C9 8.2pF
J2
CABLE 93, WB 177–197 MHz +3dBm TO A11A5 SAMPLER
Q4
250 MHZ LPF
R27 3160
R28 511
R31 422
R30 19.6
C20 1000pF
R32 10
C21 1000pF
–10VF1

NOTES:

1. REFERENCE DESIGNATORS WITHIN THIS ASSEMBLY ARE ABBREVIATED. FOR COMPLETE REFERENCE DESIGNATION, PREFIX ABBREVIATION WITH ASSEMBLY DESIGNATION.
2. UNLESS OTHERWISE INDICATED: RESISTANCE IS IN OHMS (Ω) CAPACITANCE IS IN MICROFARADS(μF) INDUCTANCE IS IN MICROHENRIES(μH)
3. A7A4A1A1C4 IS AN AIR DIELECTRIC CAPACITOR FORMED BY RESONATOR HOUSING AND RESONATOR CENTER CONDUCTOR.
4. PWR ADJUSTMENT. THIS IS AN ADJUSTABLE PROBE MOUNTED ON A7A4A1A2 M/N VCO BOARD AND EXTENDING INTO RESONATOR HOUSING.
5. ADJUSTMENT SCREW LOCATED ON COVER OF A7A4 M/N OUTPUT.
6. UNLESS OTHERWISE INDICATED: SIGNALS ENTER AT LEFT SIDE AND EXIT AT RIGHT SIDE OF FUNCTION BLOCKS.
7. MNEMONIC TABLE

MNEMONIC	DESCRIPTION
LMNE	LOW=A/M OUTPUT ENABLE

8. THE A7A4A2 M/N OUTPUT BOARD HAS MULTIPLE VERSIONS. THIS SCHEMATIC DIAGRAM REPRESENTS THE CIRCUITS OF A7A4A2 PART NUMBERS 85660–60192 AND 85660–60239. FUNCTION BLOCK D (LO OUTPUT AMPLIFIER), FUNCTION BLOCK E (LO AMPLIFIER), AND FUNCTION BLOCK G (M/N OUTPUT AMPLIFIER) DIFFER BETWEEN THE TWO BOARD VERSIONS. BOTH VERSIONS OF FUNCTION BLOCK E AND FUNCTION BLOCK G ARE SHOWN ON THIS SCHEMATIC. THE A7A4A2 PART NUMBER MUST BE IDENTIFIED TO DETERMINE WHICH FUNCTION BLOCK VERSIONS ARE NEEDED. IN FUNCTION BLOCK D, THE DIFFERENCE BETWEEN THE TWO BOARD VERSIONS IS THE VALUES OF C6 AND L3. REFER TO THE LIST BELOW FOR THE CORRECT VALUE OF C6 AND L3. THE PART NUMBERS FOR C6 AND L3 ARE INCLUDED IN THE PARTS LISTS.

A7A4A2 PART NUMBER	C6 VALUE	L3 VALUE
85660–60192	4.7pF	50nH
85660–60239	6.8pF	51nH

A7A4 M/N OUTPUT ASSEMBLY 85660-60267 (SERIAL PREFIX: 2611A)

A7A4A2 M/N OUTPUT BOARD 85660-60266 (SERIAL PREFIX: 2611A)

P1

PIN	SIGNAL	TO/FROM	FUNCTION BLOCK
1	VCO TUNE (+)	A7A3P1-21	A
16	VCO TUNE (+)	A7A3P1-21	A
2	GND		H
17	GND		H
3	VCO TUNE (-)	A7A3P1-6	A
18	VCO TUNE (-)	A7A3P1-6	A
4	GND		H
19	GND		
5	-10V		
20	-10V		
6	GND		
21	GND		
7	-5.2V		
22	-5.2V		
8	GND		
23	GND		
9	+20V		
24	+20V		
10	GND		
25	GND		
11	GND		
26	GND		
12	-40V		
27	-40V		
13	GND		
28	GND		H
14	LMNE	A12P2-30	F
29	LMNE	A12P2-30	F
15	GND		H
30	GND		H

(A) LOOP AMPLIFIER

(H) POWER SUPPLIES

A7A4A1 M/N VOLTAGE CONTROLLED OSCILLATOR (VCO) ASSEMBLY 85660-60096

A7A4A1A2 M/N VCO BOARD 85660-60018

(B) VOLTAGE-CONTROLLED OSCILLATOR

RESONATOR HOUSING
A7A4A1A1 M/N VCO 85660-60112

(C) BUFFER AMPLIFIER

(D) LO OUTPUT AMPLIFIER

(E) LO AMPLIFIER

(F) DIVIDE BY 2

(G) M/N OUTPUT AMPLIFIER

NOTES:

1. REFERENCE DESIGNATORS WITHIN THIS ASSEMBLY ARE ABBREVIATED. FOR COMPLETE REFERENCE DESIGNATION, PREFIX ABBREVIATION WITH ASSEMBLY DESIGNATION.
2. UNLESS OTHERWISE INDICATED: RESISTANCE IS IN OHMS (Ω) CAPACITANCE IS IN MICROFARADS (μF) INDUCTANCE IS IN MICROHENRIES (μH)
3. A7A4A1A1C4 IS AN AIR DIELECTRIC CAPACITOR FORMED BY RESONATOR HOUSING AND RESONATOR CENTER CONDUCTOR.
4. PWR ADJUSTMENT. THIS IS AN ADJUSTABLE PROBE MOUNTED ON A7A4A1A1 PCB, MOUNTED AND EXTENDING INTO RESONATOR HOUSING.
5. ADJUSTMENT SCREW LOCATED ON COVER OF A7A4 M/N OUTPUT.
6. UNLESS OTHERWISE INDICATED: SIGNALS ENTER AT LEFT SIDE AND EXIT AT RIGHT SIDE OF FUNCTION BLOCKS.
7. MNEMONIC TABLE

MNEMONIC	DESCRIPTION
LMNE	LOW-M/N OUTPUT ENABLE

A7A4

HP Part Number 85660-60020

A7A5 Reference Motherboard

Reference Designation	HP Part Number	CD	Qty	Description	Mfr Code	Mfr Part Number
A7A5	85660-60020	2	1	REFERENCE MOTHERBOARD (SERIAL PREFIXES: 2410A-2607A)	28480	85660-60020
A7A5C1	0160-2437	1	1	CAPACITOR-FDTHRU 5000PF +80 -20% 200V	33095	54-713-033-X5V-502Z
A7A5C2	0160-2437	1	1	CAPACITOR-FDTHRU 5000PF +80 -20% 200V	33095	54-713-033-X5V-502Z
A7A5C3	0160-2437	1	1	CAPACITOR-FDTHRU 5000PF +80 -20% 200V	33095	54-713-033-X5V-502Z
A7A5C4	0160-2437	1	1	CAPACITOR-FDTHRU 5000PF +80 -20% 200V	33095	54-713-033-X5V-502Z
A7A5C5	0160-2437	1	1	CAPACITOR-FDTHRU 5000PF +80 -20% 200V	33095	54-713-033-X5V-502Z
A7A5C6	0160-2437	1	1	CAPACITOR-FDTHRU 5000PF +80 -20% 200V	33095	54-713-033-X5V-502Z
A7A5C7	0160-2437	1	1	CAPACITOR-FDTHRU 5000PF +80 -20% 200V	33095	54-713-033-X5V-502Z
A7A5C8	0160-2437	1	1	CAPACITOR-FDTHRU 5000PF +80 -20% 200V	33095	54-713-033-X5V-502Z
A7A5C9	0160-2437	1	1	CAPACITOR-FDTHRU 5000PF +80 -20% 200V	33095	54-713-033-X5V-502Z
A7A5C10	0160-2437	1	1	CAPACITOR-FDTHRU 5000PF +80 -20% 200V	33095	54-713-033-X5V-502Z
A7A5C11	0160-2437	1	1	CAPACITOR-FDTHRU 5000PF +80 -20% 200V	33095	54-713-033-X5V-502Z
A7A5C12	0160-2437	1	1	CAPACITOR-FDTHRU 5000PF +80 -20% 200V	33095	54-713-033-X5V-502Z
A7A5C13	0160-6211	7	1	CAPACITOR-FDTHRU 10PF 20% 200V CER	33095	54-779-003-X5F-100M
A7A5C14	0160-6211	7	1	CAPACITOR-FDTHRU 10PF 20% 200V CER	33095	54-779-003-X5F-100M
A7A5MP1				NOT ASSIGNED		
A7A5MP2	0360-0124	3	5	CONNECTOR-SGL CONT PIN .04-IN-BSC-SZ RND	97300	
A7A5MP3	2190-0007	2	2	WASHER-LK INTL T NO. 6 .141-IN-ID	78189	1906-00-00-2580
A7A5MP4	2190-0087	8	12	WASHER-LK HLCL NO. 8 .168-IN-ID	78553	KANTLINK
A7A5MP5	2420-0003	7	2	NUT-HEX-OBL-CHAM 6-32-THD .094-IN-THK	80120	
A7A5MP6	2580-0002	4	12	NUT-HEX-DBL-CHAM 8-32-THD .085-IN-THK	80120	
A7A5MP7	85660-00037	5	1	INSULATOR FOR XA7A4	28480	85660-00037
A7A5MP8	85660-00050	2	1	INSULATOR FOR XA7A2	28480	85660-00050
A7A5MP9	85660-00051	3	1	INSULATOR FOR XA7A1	28480	85660-00051
A7A5MP10	0890-0983	5	1	TUBING-HS .125-IN-D/.062-IN-RCVD	06090	VERSAFIT-1/8-BLK
A7A5MP18	9170-0029	3	12	CORE-SHIELDING BEAD	02114	56-590-65A2/4A
A7A5XA7A1	1251-4423	3	1	CONNECTOR-PC EDGE	26742	190-275-01
A7A5XA7A2	1251-4174	1	1	CONNECTOR-PC EDGE 15-CONT/ROW 1-ROW	26742	
A7A5XA7A3	1251-2035	9	1	CONNECTOR-PC EDGE 15-CONT/ROW 2-ROWS	26742	220-624-03
A7A5XA7A4	1251-5020	8	1	CONNECTOR-PC EDGE 15-CONT/ROW 1-ROW	26742	190-282-01
A7A5XA7A5P1	5060-0112	8	1	CONNECTOR, 15-CONT DIP	28480	5060-0112
A7A5XA7A5P2	5060-0112	8	1	CONNECTOR, 15-CONT DIP	28480	5060-0112

**Indicates factory-selected value*

HP Part Number 85660-60265

A7A5 Reference Motherboard

Reference Designation	HP Part Number	C B	Qty	Description	Mfr Code	Mfr Part Number
A7A5	15660-60265	2	1	REFERENCE MOTHERBOARD (SERIAL PREFIXES: 2611A)	28480	85660-60020
A7A5C1	1160-2437	1	1	CAPACITOR-FDTHRU 5000PF +BO -20% 200V	33095	54-713-033-X5V-502Z
A7A5C2	)160-2437	1	1	CAPACITOR-FDTHRU 5000PF +BO -20% 200V	33095	54-713-033-X5V-502Z
A7A5C3	)160-2437	1	1	CAPACITOR-FDTHRU 5000PF +BO -20% 200V	33095	54-713-033-X5V-502Z
A7A5C4	)160-2437	1	1	CAPACITOR-FDTHRU 5000PF +BO -20% 200V	33095	54-713-033-X5V-502Z
A7A5C5	)160-2437	1	1	CAPACITOR-FDTHRU 5000PF +BO -20% 200V	33095	54-713-033-X5V-502Z
A7A5C6	)160-2437	1	1	CAPACITOR-FDTHRU 5000PF +BO -20% 200V	33095	54-713-033-X5V-502Z
A7A5C7	160-2437	1	1	CAPACITOR-FDTHRU 5000PF +BO -20% 200V	33095	54-713-033-X5V-502Z
A7A5C8	1160-2437	1	1	CAPACITOR-FDTHRU 5000PF +BO -20% 200V	33095	54-713-033-X5V-502Z
A7A5C9	)160-2437	1	1	CAPACITOR-FDTHRU 5000PF +BO -20% 200V	33095	54-713-033-X5V-502Z
A7A5C10	)160-2437	1	1	CAPACITOR-FDTHRU 5000PF +BO -20% 200V	33095	54-713-033-X5V-502Z
A7A5C11	)160-2437	1	1	CAPACITOR-FDTHRU 5000PF +BO -20% 200V	33095	54-713-033-X5V-502Z
A7A5C12	)160-2437	1	1	CAPACITOR-FDTHRU 5000PF +BO -20% 200V	33095	54-713-033-X5V-502Z
A7A5C13	)160-6211	7	1	CAPACITOR-FDTHRU 10PF 20% 200V CER	33095	54-779-003-X5F-100M
A7A5C14	)160-6211	7	1	CAPACITOR-FDTHRU 10PF 20% 200V CER	33095	54-779-003-X5F-100M
A7A5C15	)160-2437	1	1	CAPACITOR-FDTHRU 500PF +BO -20% 200V	33095	54-713-033-X5V-502Z
A7A5MP1				NOT ASSIGNED		
A7A5MP3	1190-0007	2	1	WASHER-LK INTL T NO. 6 .141-IN-ID	78189	1906-00-00-2580
A7A5MP4	:190-0087	8	1	WASHER-LK HLCL NO. 8 .168-IN-ID	78553	KANTLINK
A7A5MP5	1420-0003	7	1	NUT-HEX-DBL-CHAM 6-32-THD .094-IN-THK	80120	
A7A5MP6	*1580-0002*	4	1	NUT-HEX-DBL-CHAM B-32-THD .085-IN-THK	80120	
A7A5MP7	15660-00037	5	1	INSULATOR FOR XA7A4	28480	85660-00037
A7A5MP8	5660-00050	2	1	INSULATOR FOR XA7A2	28480	85660-00050
A7A5MP9	5660-00051	3	1	INSULATOR FOR XA7A1	28480	85660-00051
A7A5MP10	890-0983	5	1	TUBING-HS .125-IN-D/.062-IN-RCVD	06090	VERSAFIT-1/B-BLK
A7A5MP18	170-0029	3	1	:ORE-SHIELDING BEAD	02114	56-590-65A2/4A
A7A5XA7A1	251-4423	3	1	:ONNECTOR-PC EDGE	26742	190-275-01
A7A5XA7A2	251-4174	1	1	:ONNECTOR-PC EDGE 15-CONT/ROW 1-ROW	26742	
A7A5XA7A3	1251-2035	9	1	CONNECTOR-PC EDGE 15-CONT/ROW Z-ROWS	26742	220-624-03
A7A5XA7A4	1251-5020	8	1	CONNECTOR-PC EDGE 15-CONT/ROW I-ROW	26742	190-282-01
A7A5XA7A5P1	5060-0112	8	1	CONNECTOR, 15-CONT DIP	28480	5060-0112
A7A5XA7A5P2	5060-0112	8	1	CONNECTOR, 15-CONT DIP	28480	5060-0112

**Indicates factory-selected value*

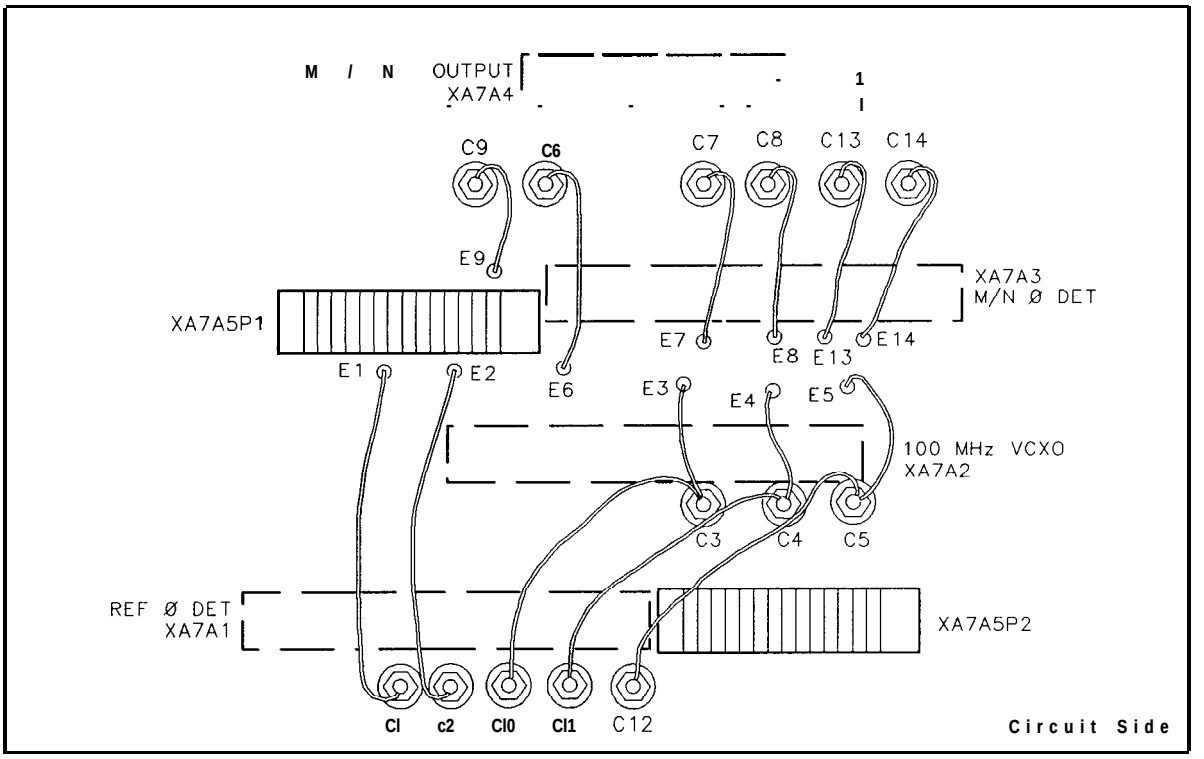

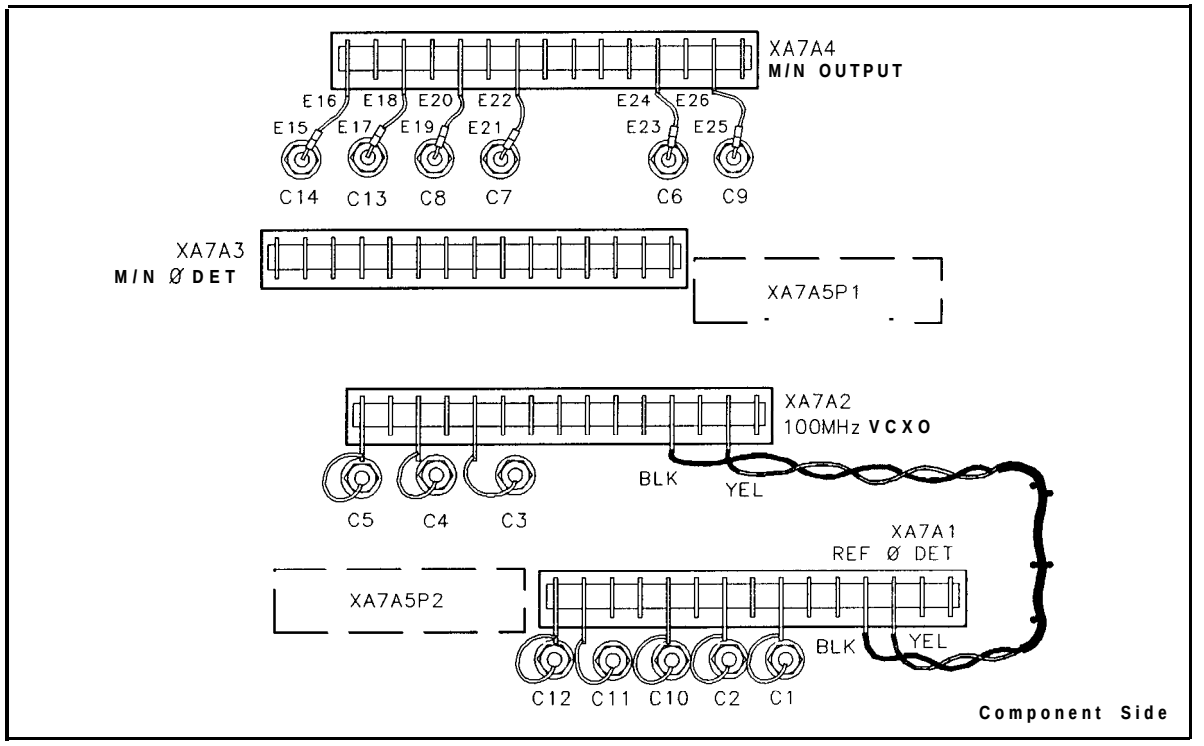

A7A5 Reference Motherboard Component Locations, 85660-20020

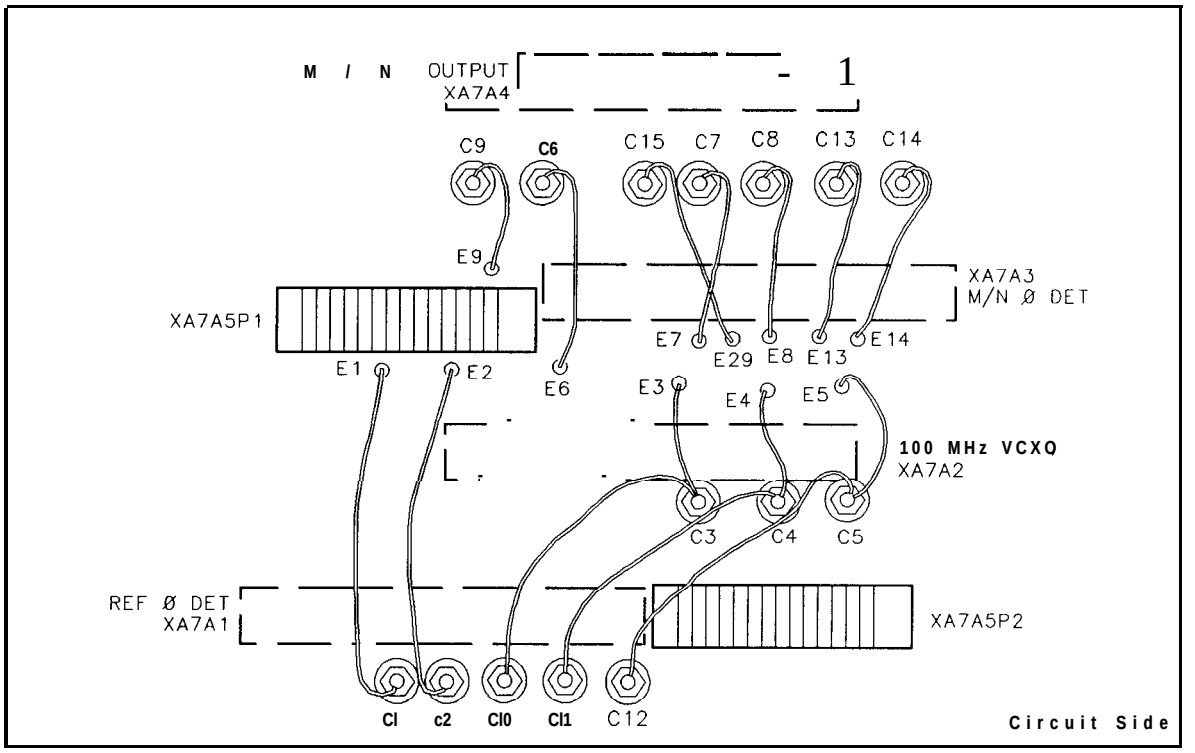

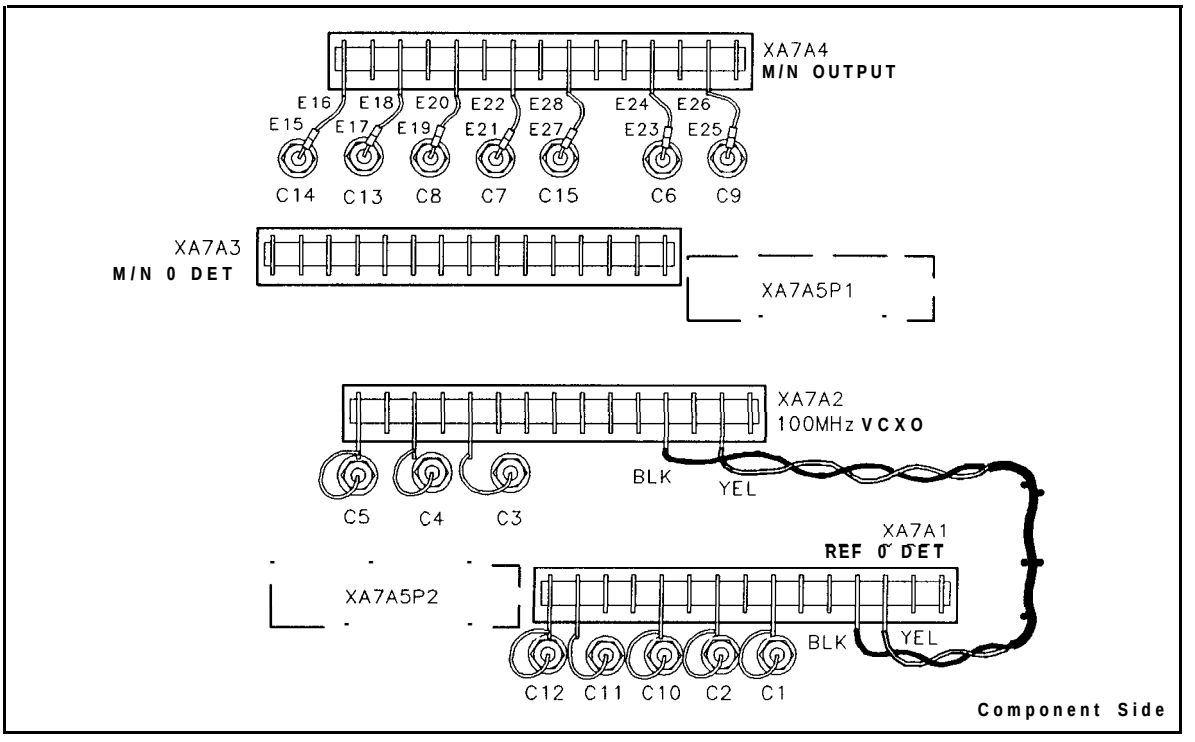

A7A5 Reference Motherboard Component Locations, 85660-60265

A7A5 REFERENCE MOTHERBOARD
85660-60020
(SERIAL PREFIXES: 2410A-2607A)

P1

PIN	SIGNAL	TO/FROM
1	M5	A12P2-12
2	LMNE	A12P2-30
3	M3	A12P2-13
4	M4	A12P2-31
5	M1	A12P2-14
6	M2	A12P2-32
7	N.C.	
8	HULM	A12P3-10
9	N.C.	
10	N6	A12P3-17
11	N5	A12P3-2
12	N4	A12P3-18
13	N3	A12P3-3
14	N2	A12P3-19
15	N1	A12P3-4

P2

PIN	SIGNAL	TO/FROM
1	GND	
2	+20V	
3	+20V	
4	+5.2V	NC
5	+5.2V	NC
6	-40V	
7	-40V	
8	-10V	
9	-10V	
10	GND	
11	GND	
12	-5.2V	
13	-5.2V	
14	HULR	A12P3-25
15	GND	

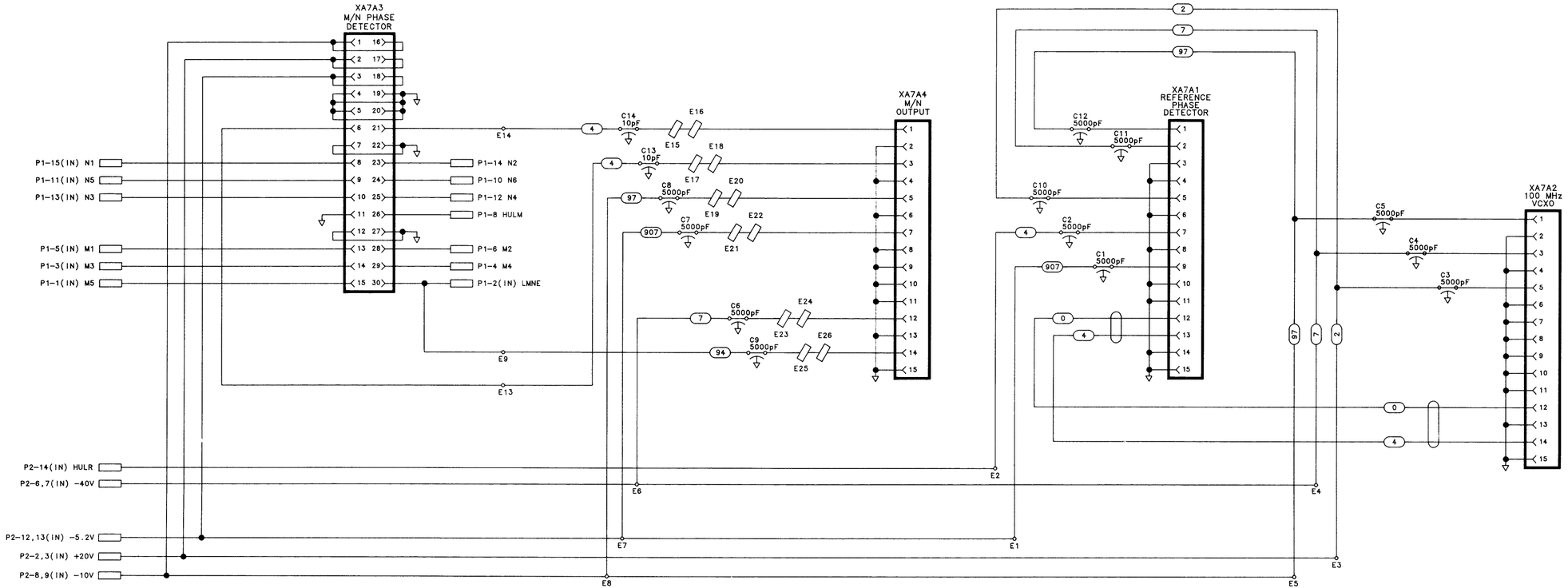

NOTES:

1. REFERENCE DESIGNATORS WITHIN THIS ASSEMBLY ARE ABBREVIATED. FOR COMPLETE REFERENCE DESIGNATION PREFIX ABBREVIATION WITH ASSEMBLY DESIGNATION.
2. UNLESS OTHERWISE INDICATED:
   RESISTANCE IS IN OHMS (Ω)
   CAPACITANCE IS IN MICROFARADS(μF)
   INDUCTANCE IS IN MICROHENRIES(μH)

A7A5

A7A5 M/N-REFERENCE MOTHERBOARD, INTERCONNECT DIAGRAM

A7A5 REFERENCE MOTHERBOARD
85660-60265
(SERIAL PREFIX: 2611A)

NOTES:

1. REFERENCE DESIGNATORS WITHIN THIS ASSEMBLY ARE ABBREVIATED. FOR COMPLETE REFERENCE DESIGNATION PREFIX ABBREVIATION WITH ASSEMBLY DESIGNATION.
2. UNLESS OTHERWISE INDICATED:
   RESISTANCE IS IN OHMS (Ω)
   CAPACITANCE IS IN MICROFARADS(μF)
   INDUCTANCE IS IN MICROHENRIES(μH)

P1

PIN	SIGNAL	TO/FROM
1	M5	A12P2-12
2	LMNE	A12P2-30
3	M3	A12P2-13
4	M4	A12P2-31
5	M1	A12P2-14
6	M2	A12P2-32
7	N.C.	
8	HULM	A12P3-10
9	N.C.	
10	N6	A12P3-17
11	N5	A12P3-2
12	N4	A12P3-18
13	N3	A12P3-3
14	N2	A12P3-19
15	N1	A12P3-4

P2

PIN	SIGNAL	TO/FROM
1	GND	
2	+20V	
3	+20V	
4	+5.2V	NC
5	+5.2V	NC
6	-40V	
7	-40V	
8	-10V	
9	-10V	
10	GND	
11	GND	
12	-5.2V	
13	-5.2V	
14	HULR	A12P3-25
15	GND	

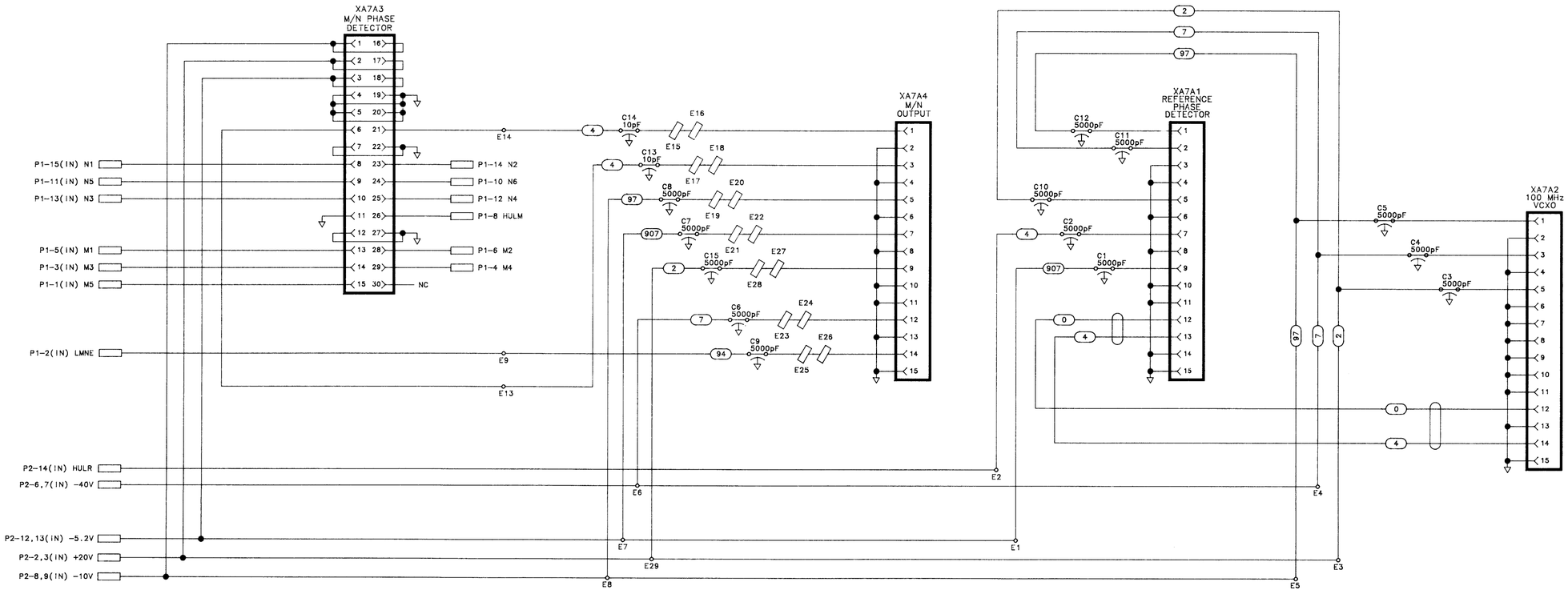

A7A5

A7A5 M/N-REFERENCE MOTHERBOARD, INTERCONNECT DIAGRAM

A8/A9

A8 Rectifier, Circuit Description

Power is supplied to the instrument through the A9 Power Line Module, which contains the line voltage selector, to the primary of transformer T1. Three bridge rectifiers and one center-tapped secondary provide the rectified outputs.

Diodes CR1 through CR4 form a bridge rectifier that provides approximately 55 V for the -40 V supply, part of the A18 Negative Regulator. CR5 through CR8 form a bridge rectifier that provides about 20 V for the -10 V supply and the -5.2 V supply, also part of the Al8 Negative Regulator.

Diodes CR9 through CR12 form a bridge rectifier that provides approximately 30 V for the +22 V supply, part of the A8 Rectifier, and also the i-20 V and i-12 V supplies, part of the Al7 Positive Regulator. Diodes CR13 and CR14 form a full-wave rectifier that provides about 12 V for the +5.2 V supply, part of the Al7 Positive Regulator.

The +22 V (STANDBY) supply is an 18 V three-terminal regulator U1 which has its common terminal biased at +4 V by R1, DS1, and R2. DS1 is an LED indicator that indicates the presence of +22 V. VR1 and CR16 form a crowbar circuit for overvoltage protection. Fuse F1 provides overcurrent protection. The regulator U1 is also internally protected against short circuits on its output. The +22 V supply is on whenever the instrument is connected to an ac line outlet.

The instrument is also protected against line overvoltages by an input crowbar circuit consisting of VR2 and CR18. This crowbar causes the line fuse to blow if an overvoltage condition occurs on the line.

Filter capacitors and bleeder resistors for all the switched power supplies are located on the A23 Motherboard. The filter capacitors for the +22 V (STANDBY) supply are A8C6 and A6A10 C8. The location of fuses in the RF Section is shown in Figure 1.

RF Section Internal Fuse Replacement

Note For location of hardware and cables referred to in this procedure, see Figure 1.

Warning Remove ac line cord from both instruments before proceeding with this procedure.

1. Position instrument upside-down as shown in view A.
2. Remove feet ① from rear of RF Section by removing screws ② show in view A.
3. Remove bottom cover by loosening screw ③ and pulling cover toward rear of instrument.
4. Location of fuses is shown in view B.

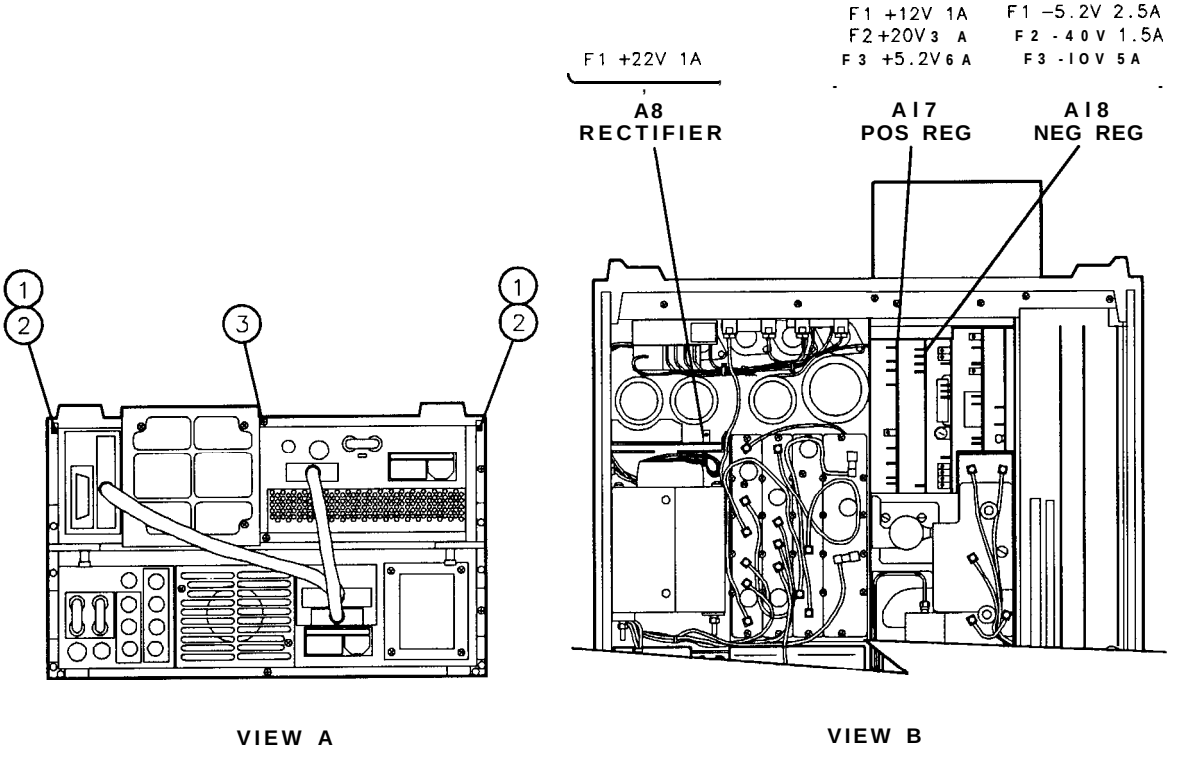

Figure 1. Internal Fuse Replacement

Transformer Replacement

Note For location of hardware and cables referred to in the procedure, see Figure 2.



1. Remove ac line cords, IF-Display Section, and RF Section bottom cover, top cover, and right side cover.
2. Remove front panel. (See A5 Front Panel section for A5 Front Panel Removal procedure.)
3. Remove A6 RF Module. (See A6 section for A6 RF Module removal procedure.)
4. Remove seven screws ①.
5. To avoid losing washers and nuts from screws ② into the interior of the RF Section, it is recommended to do the following:
   a. Set the RF Section on its right side with transformer on bottom.
   b. Set the RF Section partially off the table so that a screwdriver can reach the remaining four mounting screws.
   c. For each screw ② hold nut with needlenose pliers while removing screw. Mounting screws on motherboard side can be accessed through small opening ③ on motherboard.
   d. When installing new transformer, set RF Section on its side as described in steps 5a and 5b. For each mounting screw, align nut and washers with hole, and while holding nut with needlenose pliers, tighten screw.
   e. Tighten remaining seven screws ① to secure Transformer to RF Section.
6. Replace RF Module.
7. Replace front panel.
8. Replace covers, attach IF-Display section to RF Section, and replace ac line cords.

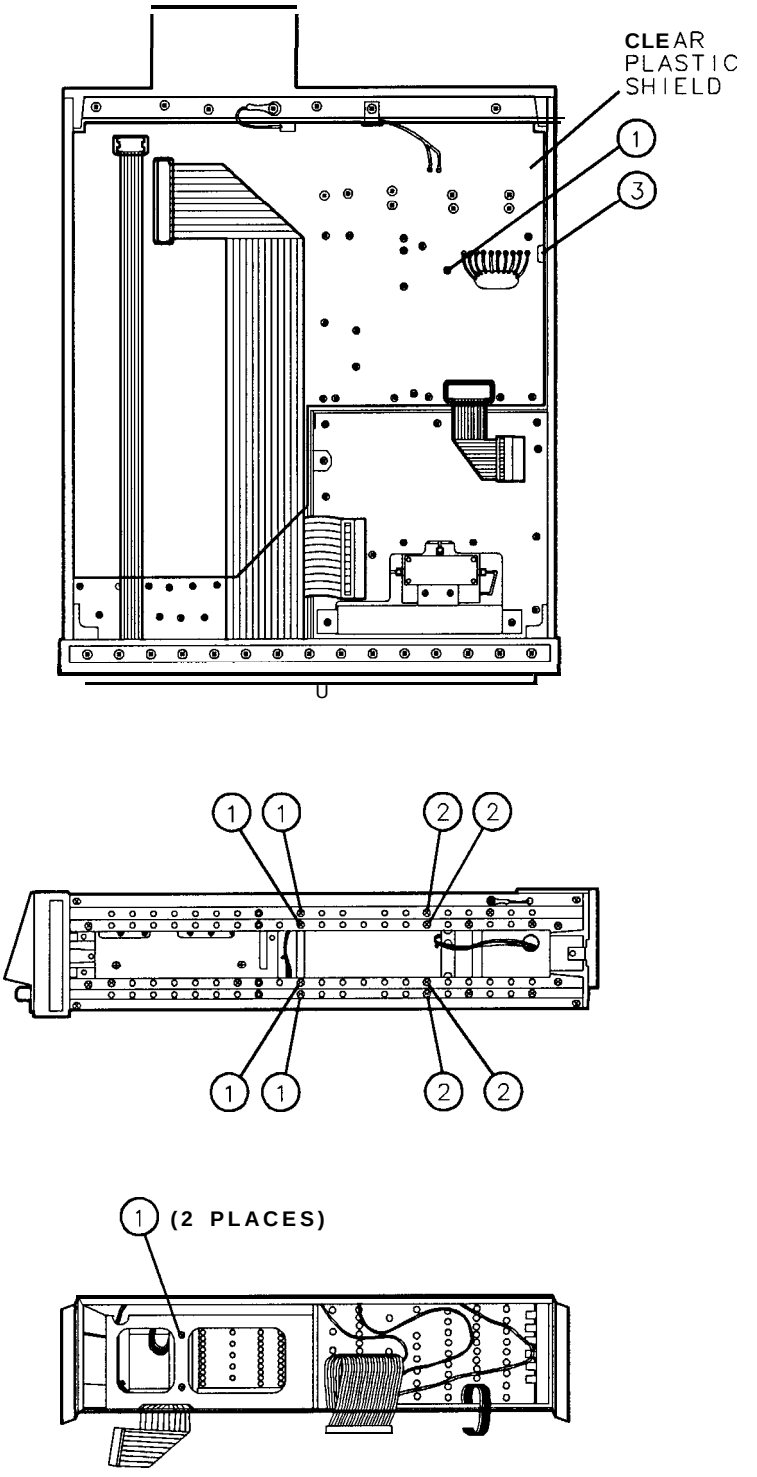

Figure 2. Transformer Replacement

Power Transistor Replacement (Rear RF Cover Removal)

Note For location of hardware and cables referred to in this procedure, see Figure 3.

With ac line cords and RF Section bottom cover removed, proceed as follows:

1. Loosen rear cover by removing five screws ①.
2. Power Transistors can now be easily replaced.

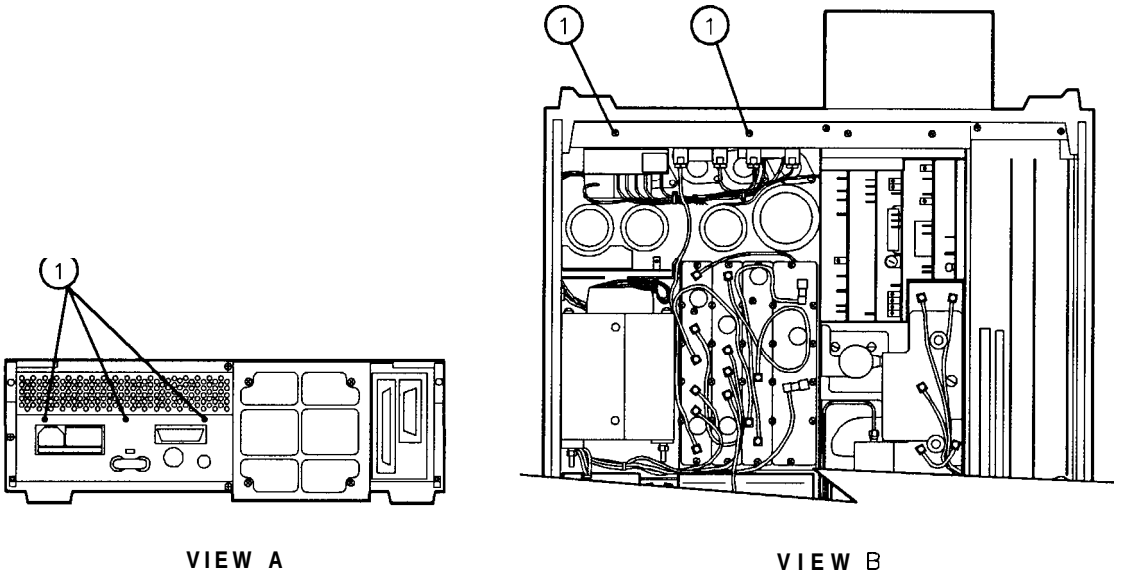

VIEW A VIEW B

Figure 3. Power Transistor Replacement

HP Part Number 85660-60196

A8 Rectifier

Reference Designation	HP Part Number	CD	Qty	Description	Mfr Code	Mfr Part Number
A8	85660-60196	3	1	RECTIFIER BOARD ASSEMBLY	28480	85660-60196
A8C1	0160-2055	9	1	CAPACITOR-FXD .01UF +80-20% 100VDC CER		805-504 Y5V 1032
A8C2	0160-2055	9	1	CAPACITOR-FXD .01UF +80-20% 100VDC CER		805-504 Y5V 1032
A8C3	0160-2055	9	1	CAPACITOR-FXD .01UF +80-20% 100VDC CER		805-504 Y5V 1032
A8C4	0160-4084	8	1	CAP-FXD 0.1uF 50 V	56289	1C20X7R104M050B
A8C5	0180-0230	0	1	CAP-FXD 1uF 50 V TA	56289	150D105X0050A2-DYS
A8C6	0180-3476	2	1	CAP-FXD 22uF 35 V AL-ELCTLT		SM35T22
A8C7	0180-0197	8	1	CAPACITOR-FXD 2.2UF+-10% 20VDC TA	56289	150D225X9020A2-DYS
A8C8	0160-4005	3	1	CAPACITOR-FXD 1UF +-20% 100VDC CER	04222	SR401E105MAAH
A8C9	0160-4005	3	1	CAPACITOR-FXD 1UF +-20% 100VDC CER	04222	SR401E105MAAH
A8C10	0160-4005	3	1	CAPACITOR-FXD 1UF +-20% 100VDC CER	04222	SR401E105MAAH
A8C11	0160-4005	3	1	CAPACITOR-FXD 1UF +-20% 100VDC CER	04222	SR401E105MAAH
A8C12	0160-3638	6	1	CAP-FXD 0.22uF 200 V	04222	SR402E224ZAAH
A8C13	0180-1731	8	1	CAPACITOR-FXD 4.7UF+-10% 50VDC TA	56289	150D475X9050B2-DYS
A8CR1	1901-0662	3	1	DIODE-PWR RECT 100V 6A	04713	MR751
A8CR2	1901-0662	3	1	DIODE-PWR RECT 100V 6A	04713	MR751
A8CR3	1901-0662	3	1	DIODE-PWR RECT 100V 6A	04713	MR751
A8CR4	1901-0662	3	1	DIODE-PWR RECT 100V 6A	04713	MR751
A8CR5	1901-0662	3	1	DIODE-PWR RECT 100V 6A	04713	MR751
A8CR6	1901-0662	3	1	DIODE-PWR RECT 100V 6A	04713	MR751
A8CR7	1901-0662	3	1	DIODE-PWR RECT 100V 6A	04713	MR751
A8CR8	1901-0662	3	1	DIODE-PWR RECT 100V 6A	04713	MR751
A8CR9	1901-0662	3	1	DIODE-PWR RECT 100V 6A	04713	MR751
A8CR10	1901-0662	3	1	DIODE-PWR RECT 100V 6A	04713	MR751
A8CR11	1901-0662	3	1	DIODE-PWR RECT 100V 6A	04713	MRJ51
A8CR12	1901-0662	3	1	DIODE-PWR RECT 100V 6A	04713	MR751
A8CR13	1901-0765	7	1	DIODE-PWR RECT 1N5812 50V 20A 35NS DO-4	30043	1N5812
A8CR14	1901-0765	7	1	DIODE-PWR RECT 1N5812 50V 20A 35NS DO-4	30043	1N5812
A8CR16	1884-0018	5	1	THYRISTOR-SCR 2N4186 VRRM=200	04713	2N4186
A8CR17	1901-0662	3	1	DIODE-PWR RECT 100V 6A	04713	MR751
A8CR18	1884-0018	5	1	THYRISTOR-SCR 214186 VRRM=200	04713	2N4186
A8CR19	1901-0743	1	1	DIODE-PWR RECT 1N4004 400V 1A DO-41	71744	1N4004
A8CR20	1901-0743	1	1	DIODE-PWR RECT 1N4004 400V 1A DO-41	71744	1N4004
A8DS1	1990-0487	7	1	LED-LAMP LUM-INT=2MCD BVR=5V	28480	HLMP-1401
A8F1	2110-0001	8	1	FUSE 1A 250V NTD FE UL	75915	312 001
A8MP1				NOT ASSIGNED		
A8MP2	0590-0519	7	2	THREADED INSERT-NUT 4-40 .062-IN-LG STL	46384	KF2-440-ET
A8MP3	1200-0081	4	2	INSULATOR-FLG-BSHG NYLON	26365	974 307
A8MP4	1251-0600	0	1	CONNECTOR-SGL CONT PIN 1.14-MM-BSC-SZ SQ	27264	16-06-0034
A8MP6	2110-0726	4	2	FUSEHOLDER-CLP-TYP.25D-FUSE	13060	1115-0597T
A8MP7	2200-0107	6	2	SCREW-MACH 4-40 .375-IN-LG PAN-HD-POZI	77250	
A8MP8	2740-0001	3	2	NUT-HEX-DBL-CHAM 10-32-THD .109-IN-THK	73734	
A8MP9	0340-1114	1	1	INSULATOR-XSTR THRM-CNDCT TO-3	55285	K-4-05
A8MP10	3151-0011	2	1	WIRE 18AWG 1X18	92194	296
A8MP11	5000-9043	6	1	PIN	28480	5000-9043
A8MP12	5040-6843	2	1	EXTRACTOR	28480	5040-6843
A8MP13	36701-00018	4	1	HEATSINK RECTIFIER	28480	86701-0018

**Indicates factory-selected value*

HP Part Number 85660-60196

A8 Rectifier

Reference Designation	HP Part Number	C D	Qty	Description	Mfr Code	Mfr Part Number
A8MP14	1050-0876	8	2	WASHER MICA .560 IN-ID	86928	5624-53-5
A8MP15	)340-1077	F	2	INSULATOR HEATSINK 660		
A8R1	)698-0083	8	1	RESISTOR 1.96K 1% .125W TF TC=O+-100	19701	SFR25H
A8R2	!100-3052	4	1	RESISTOR-TRMR 50 10% TKF SIDE-ADJ 17-TRN	73138	89PR50
A8R3	)757-0346	2	1	RESISTOR 10 +-1% .125W TF TC=O+-100	91637	CMF-55-1, T-l
A8R4	)698-3444	1	1	RESISTOR 316 1% .125W TF TC=O+-100	19701	SFR25H
A8R5	)698-3447	4	1	RESISTOR 422 1% .125W TF TC=O+-100	19701	SFR25H
A8R6*	)698-3442	9	1	RESISTOR 237 1% .125W TF TC=O+-100	19701	SFR25H
A8R7	)698-3558	8	1	RESISTOR 4.02K 1% .125W TF TC=O+-100	19701	SFR25H
A8U1	.826-0423	4	1	IC V RGLTR-ADJ-POS 1.2/37V TO-3 PKG	27014	LM317K
A8VR1	.902-3263	8	1	DIODE-ZNR 24.9V 2% DO-35 PD=.4W	04713	
A8VR2	.902-0197	1	1	DIODE-ZNR 82.5V 5% PD=1W IR=5UA	04713	

**Indicates facto y-selected value*

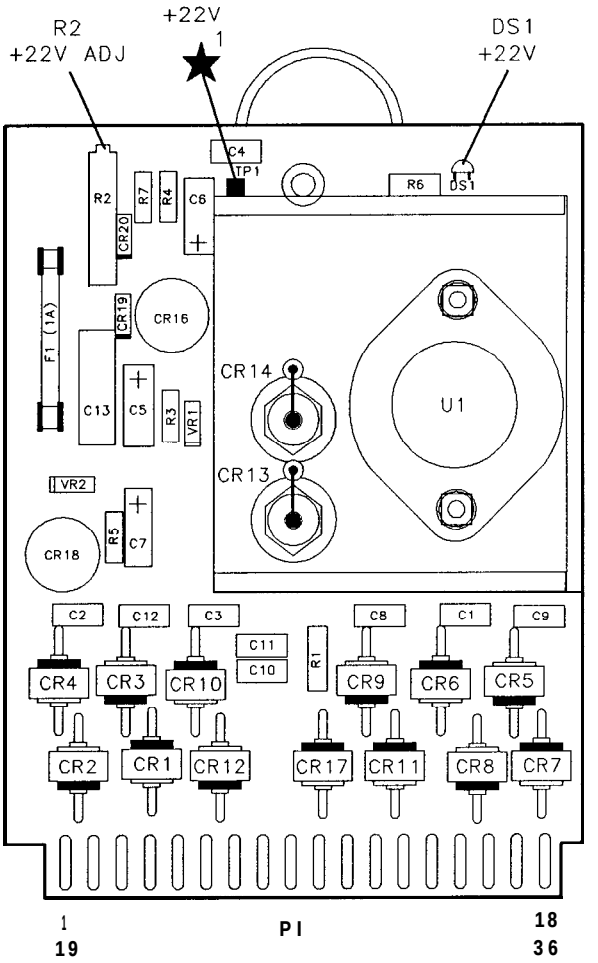

A6 Rectifier Component Locations, **85660-60196**

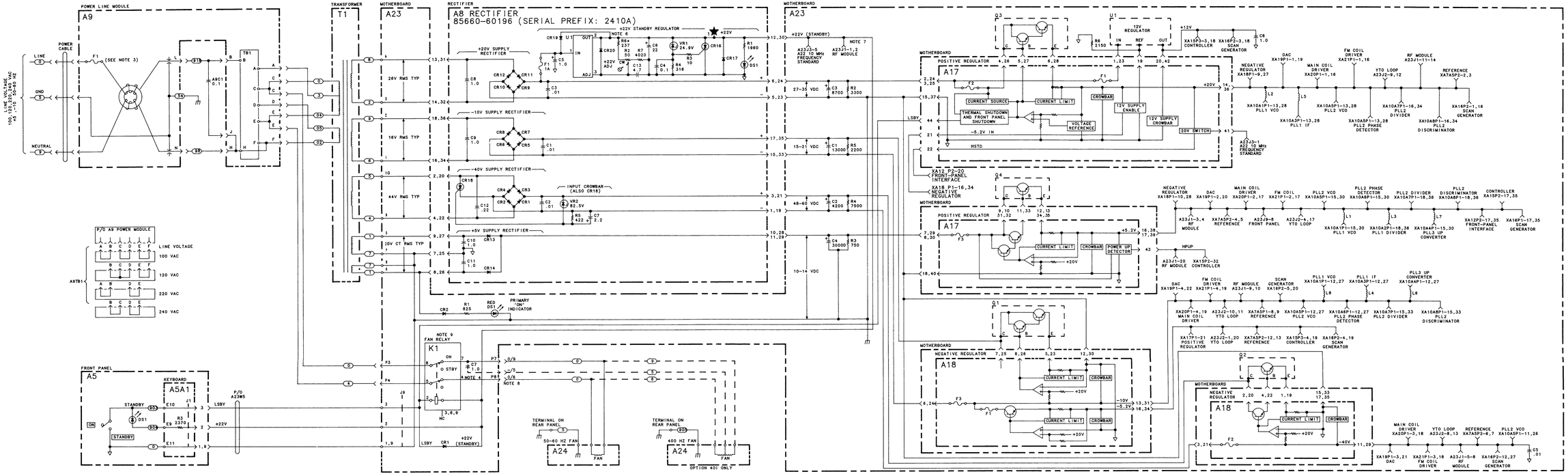

NOTES:

1. REFERENCE DESIGNATORS WITHIN THIS ASSEMBLY ARE ABBREVIATED. FOR COMPLETE REFERENCE DESIGNATION, PREFIX ABBREVIATION WITH ASSEMBLY DESIGNATION.
2. UNLESS OTHERWISE INDICATED: RESISTANCE IS IN OHMS (Ω). CAPACITANCE IS IN MICROFARADS (μF) INDUCTANCE IS IN MICROHENRIES (μH)
3. A9F1 IS ALSO LISTED IN REPLACEABLE PARTS LIST AS F1 FOR ORDERING CONVENIENCE.
4. C7 LOADED FOR OPTION 400 ONLY.
5. UNLESS OTHERWISE INDICATED: SIGNALS ENTER AT LEFT SIDE AND EXIT RIGHT SIDE OF FUNCTION BLOCKS.
6. R6* IS A FACTORY-SELECTED COMPONENT. ACCEPTABLE VALUES RANGE FROM 213Ω TO 261Ω.
7. +22V (STANDBY) POWER SUPPLY FILTER CAPACITOR A8A1C8 (47μF) LOCATED IN A8 RF MODULE.
8. FIRST COLOR IS FOR IS STANDARD INSTRUMENT, SECOND COLOR IS FOR OPTION 400.
9. FOR A23 85660-60368 SERIAL PREFIX 3014A AND ABOVE.

A8

A8 RECTIFIER, SCHEMATIC DIAGRAM AND A23 MOTHERBOARD POWER DISTRIBUTION DIAGRAM

PROJ:85660/SCHEMD (FILE:S60196) WRITER:DC ILLUSTRATOR:KL DATE:5/14/90 1st PRF:5/14 2nd PRF:7/9 3RD PRF: FINAL:

A10

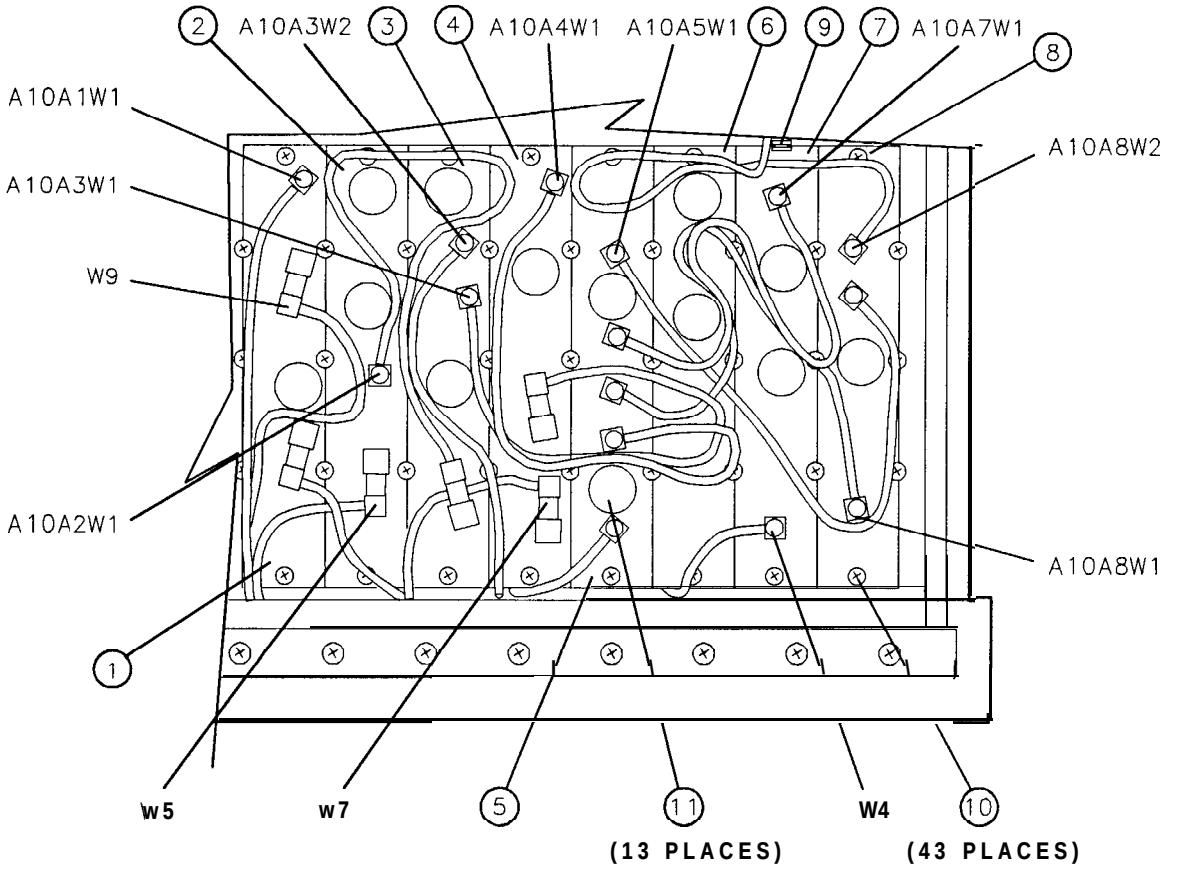

Figure 1. A10 **20/30** Synthesizer, Parts Identification (1 of 3)

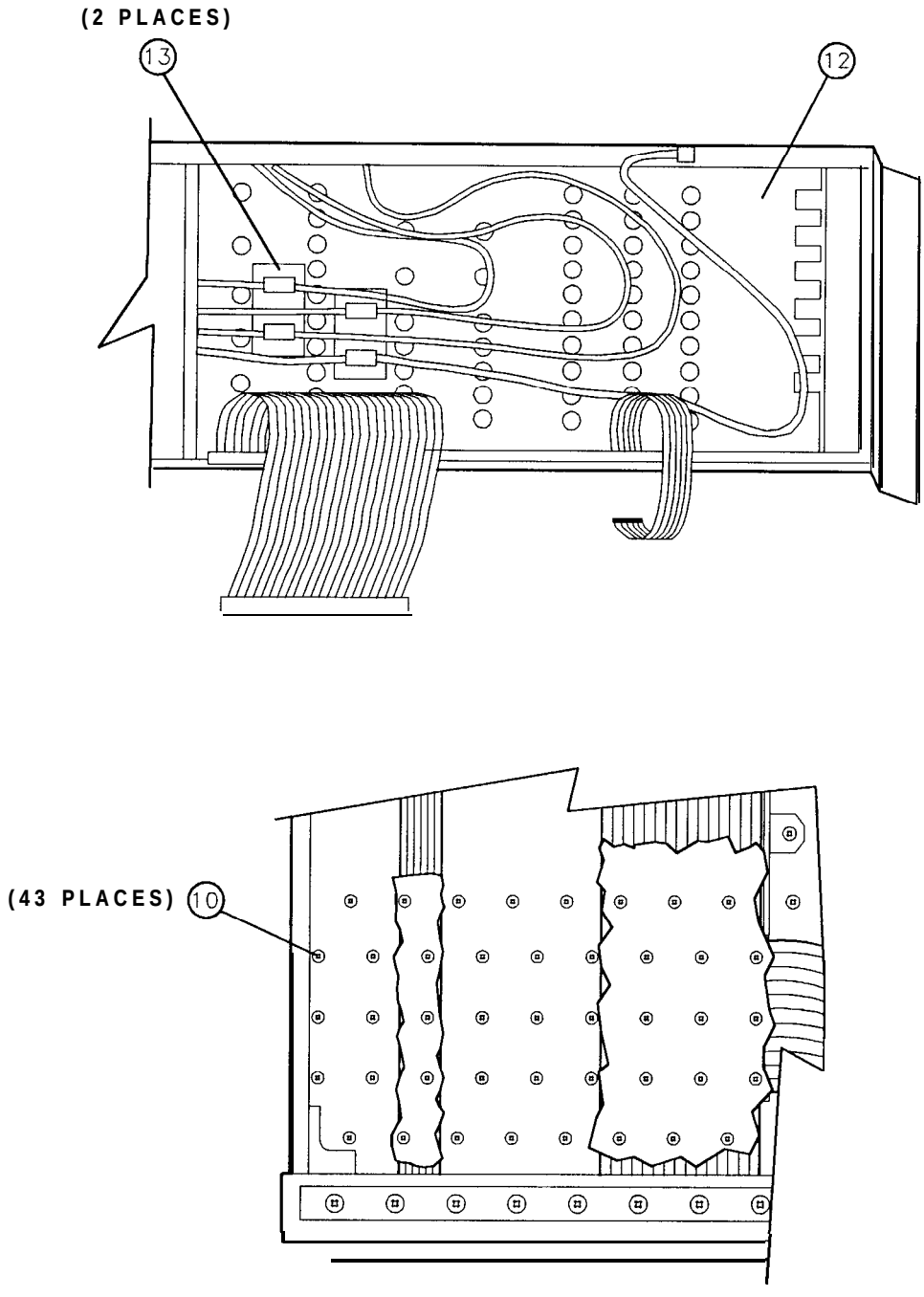

Figure 1. A10 **20/30** Synthesizer, Parts identification (2 of 3)

Item	HP Part Number	CD	Description	Mfr Code	Mfr Part Number
1	85660-20052	6	COVER, PC BOARD (A10A1 PLL1 VCO)	28480	85660-2005
2	85660-20053	7	COVER, PC BOARD (A10A2 PLL1 DIVIDER)	28480	85660-2005
3	85660-20054	8	COVER, PC BOARD (A10A3 PLL1 IF)	28480	85660-2005
4	85660-20055	9	COVER, PC BOARD (A10A4 PLL3 UP CONVERTER)	28480	85660-2005
5	85660-20056	0	COVER, PC BOARD (A10A5 PLL2 VCO)	28480	85660-2005
6	85660-20057	1	COVER, PC BOARD (A10A6 PLL2 ϕ DET)	28480	85660-20057
7	85660-20058	2	COVER, PC BOARD (A10A7 PLL2 DIVIDER)	28480	85660-2005
8	85660-20059	3	COVER, PC BOARD (A10A8 PLL2 DISCRIMINATOR)	28480	85660-2005
9	0400-0009	9	GROMMET, RUBBER (FOR A10A8W2)	28480	0400-0009
10	2200-0105	4	SCREW, MACH, 4-40, .312-IN LG, PAN HD	28480	2200-0105
11	86701-40001	9	EXTRACTOR, PC BOARD	28480	86701-40001
12	85660-20190	3	HOUSING, 20/30 SYNTHESIZER	28480	85660-20190
13	1400-0510	8	CLAMP, CABLE	28480	1400-0510

Figure 1. A10 **20/30** Synthesizer, Parts Identification (3 of 3)

RF SECTION

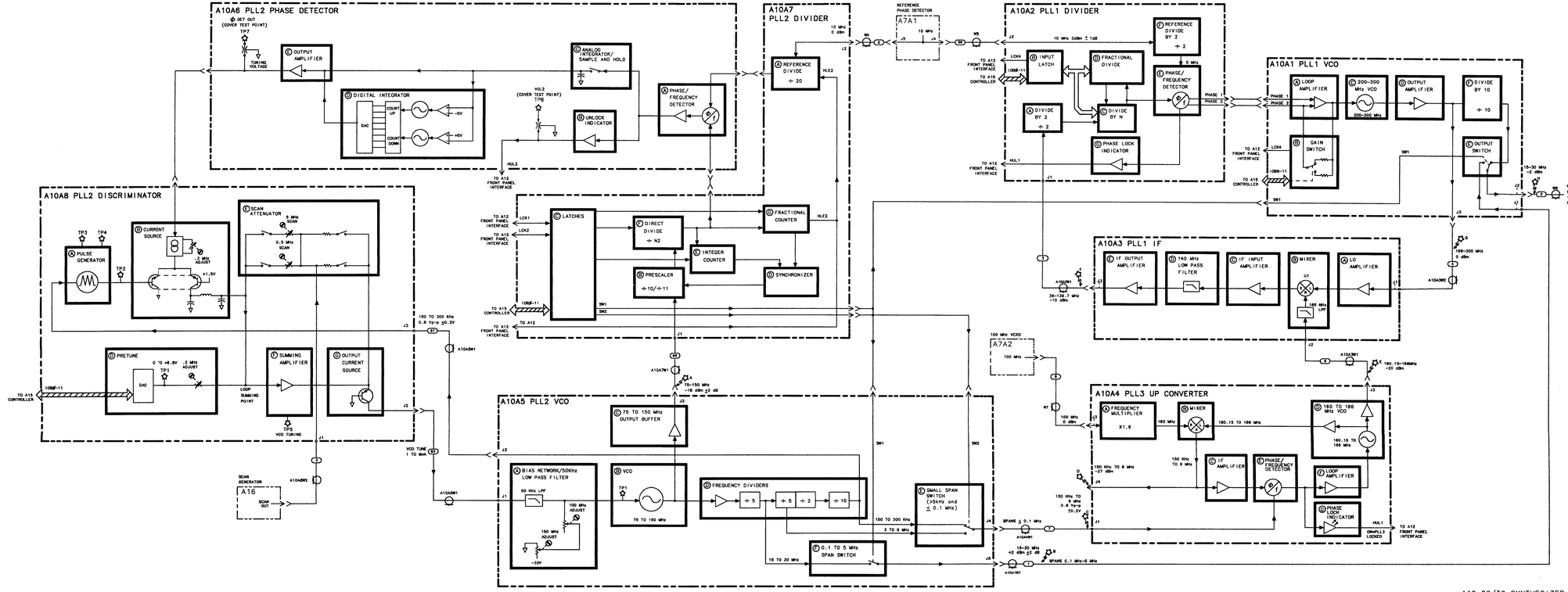
A10A6 PLL2 PHASE DETECTOR
A10A7 PLL2 DIVIDER
A10A2 PLL1 DIVIDER
A10A1 PLL1 VCO
A10A8 PLL2 DISCRIMINATOR
A10A3 PLL1 IF
A10A5 PLL2 VCO
A10A4 PLL3 UP CONVERTER
A7A1
A7A2
A16
REFERENCE PHASE DETECTOR
100 MHz VCXO
SCAN GENERATOR
TO A12 FRONT PANEL INTERFACE
TO A15 CONTROLLER
LOOP SUMMING POINT
VCO TUNE 1 TO 8mA
SPANS ≤ 0.1 MHz
SPANS 0.1 MHz–6 MHz
120/30 TO A11 YTO LOOP
A10 20/30 SYNTHESIZER, BLOCK DIAGRAM

A10A1

A10A1 Phase Lock Loop 1 (PLL1) Voltage-Controlled Oscillator (VCO), Circuit Description

A10A1 contains the loop amplifier and voltage-controlled oscillator (VCO) for the PLL1 phase lock loop. The PLL1 VCO tunes from 199.9 to 300 MHz (start frequencies of 200.000001 to 300.000000 MHz) for a range of about 4 V to 16 V tuning of the varactor. The PLL1 VCO drives a counter which divides the frequency by 10. The counter output goes through a switch and a filter to the 20/30 output. The PLL1 VCO is turned off in spans greater than n xl00 kHz but less than or equal to n × 5 MHz to prevent spurious responses.

Loop Amplifier Ⓐ

The loop amplifier consists of a low-noise differential pair input stage, Q9 and Q10, and an operational amplifier U6A. Feedback (ac) is provided by C34 and R29. The output of the amplifier goes through a programmable ac voltage divider consisting of R31, R32, R33, R34, R35 with R36 and C36. The signal is filtered by a 40 kHz low-pass filter which has two notches tuned to reject the 50 kHz subharmonics created by fractional-n division (5 MHz ÷ 100).

U6B compares the dc varactor tune voltage to about $17.5 V. If the tune voltage goes higher than this, U6B switches and pulls it down to about +5 V. Hysteresis in the switching point of U6B provided by R24 keeps U6B from switching back to the original state until the tune voltage reaches about +5 V.

Q2 keeps the tune voltage from going below about +3 V. This is to ensure that the PLL1 VCO always oscillates and the varactors do not become forward biased in spans where PLL1 is active.

Gain Switch Ⓑ

U5 latches the four most significant bits of the programming of the PLL1 fractional-n divider. These are level translated by U4 which drives four FET switches. By changing the voltage divider in Ⓐ in this manner, a constant loop bandwidth of 5 kHz is achieved.

200 to 300 MHz VCO Ⓒ and Output Amplifier Ⓓ

The PLL1 VCO consists of Q11 which operates in the grounded-base mode. The resonator is principally CR3, CR4, and L4. Feedback is accomplished with L5, R16, and C17. In spans greater than n x 100 kHz but less than or equal to n × 5 MHz, the VCO is turned off by forward biasing the varactors. Q5 is a common-base buffer amplifier. The output of the VCO is applied to Q4 where it is amplified and applied to A10A3 PLL1 IF and the Divide by 10 Ⓕ. In spans of n × 100 kHz, the VCO is tuned as low as 199.000200 MHz.

Output Switch Ⓔ

The output switch is U2 which is a quad ECL NOR gate. For frequency spans greater than n x 100 kHz, but less than or equal to n × 5 MHz, the switch input to R3 is TTL low. U2B and U2C are on while U2D is off. For all other spans, the opposite states exist. This has the effect of switching either the output of U3 divider or J1 to the 20/30 loop output J2.

Divide by 10 Ⓕ

Q3 is a common-emitter amplifier which drives U3 through a high-pass filter. U3 is an ECL divide by 10 counter which generates the necessary 19.99 MHz to 30 MHz from the PLL1 vco output.

HP Part Number 85660-60131

A10A1 PLL 1 VCO

Reference Designation	HP Part Number	C	Qty	Description	Mfr Code	Mfr Part Number
A10A1	85660-60131	6	1	BOARD ASSEMBLY, PLL1 VCO	28480	85660-60131
A10A1C1	0160-0574	3	1	CAPACITOR-FXD .022UF +-20% 100VDC CER	04222	SR201C223MAAH
A10A1C2	0160-0574	3	1	CAPACITOR-FXD .022UF +-20% 100VDC CER	04222	SR201C223MAAH
A10A1C3	0160-3875	3	1	CAPACITOR-FXD 22PF +-5% LOOVDC CER 0+-30		FD12C0G2D220J
A10A1C4	0160-0574	3	1	CAPACITOR-FXD .022UF +-20% 100VDC CER	04222	SR201C223MAAH
A10A1C5	0160-3877	5	1	CAPACITOR-FXD 100PF +-20% LOOVDC CER	04222	SR202C101MAAH
A10A1C6	0160-0574	3	1	CAPACITOR-FXD .022UF +-20% 100VDC CER	04222	SR201C223MAAH
A10A1C7	0160-3875	3	1	CAPACITOR-FXD 22PF +-5% 200VDC CER 0+-30		FD12C0G2D220J
A10A1C8	0160-0574	3	1	CAPACITOR-FXD .022UF +-20% 100VDC CER	04222	SR201C223MAAH
A10A1C9	0160-3878	6	1	CAP-FXD 1000pF 100 V	04222	SR201C102MAAH
A10A1C10	0160-3874	2	1	CAPACITOR-FXD 10PF +-.5PF ZOOVDC CER		FD12C0G2D100D
A10A1C11	0160-3878	6	1	CAP-FXD 1000pF 100 V	04222	SR201C102MAAH
A10A1C12	0160-3874	2	1	CAPACITOR-FXD 10PF +-.5PF ZOOVDC CER		FD12C0G2D100D
A10A1C13	0160-3874	2	1	CAPACITOR-FXD 10PF +-.5PF 200VDC CER		FD12C0G2D100D
A10A1C14	0160-3878	6	1	CAP-FXD 1000pF 100 V	04222	SR201C102MAAH
A10A1C15	0160-3874	2	1	CAPACITOR-FXD 10PF +-.5PF 200VDC CER		FD12C0G2D100D
A10A1C16	0160-3874	2	1	CAPACITOR-FXD 10PF +-.5PF ZOOVDC CER		FD12C0G2D100D
A10A1C17	0160-3875	3	1	CAPACITOR-FXD 22PF +-5% 200VDC CER 0+-30		FD12C0G2D220J
A10A1C18	0160-4084	8	1	CAP-FXD 0.1uF 50 V	56289	1C20X7R104M050B
A10A1C19	0160-0574	3	1	CAPACITOR-FXD .022UF +-20% 100VDC CER	04222	SR201C223MAAH
A10A1C20	0160-0574	3	1	CAPACITOR-FXD .022UF +-20% 100VDC CER	04222	SR201C223MAAH
A10A1C21	0160-4953	0	1	CAPACITOR-FXD .027UF +-5% 50VDC CER	04222	SR405A273JAAH
A10A1C22	0160-4953	0	1	CAPACITOR-FXD .027UF +-5% 50VDC CER	04222	SR405A273JAAH
A10A1C23	0160-4953	0	1	CAPACITOR-FXD .027UF +-5% 50VDC CER	04222	SR405A273JAAH
A10A1C24	0160-4951	8	1	CAPACITOR-FXD .033UF +-5% 50VDC CER	04222	SR405A333JAAH
A10A1C25	0160-4952	9	1	CAPACITOR-FXD .039UF +-5% 50VDC CER	04222	SR405A393JAAH
A10A1C26	0160-0158	9	1	CAP-FXD 5600pF 200 V POLYE-FL	84411	HEW-238M
A10A1C27	0180-0116	1	1	CAPACITOR-FXD 6.8UF+-10% 35VDC TA	56289	1500685X903582-DYS
A10A1C28	0180-0116	1	1	CAPACITOR-FXD 6.8UF+-10% 35VDC TA	56289	150D685X9035B2-DYS
A10A1C29	0180-0291	3	1	CAPACITOR-FXD 1UF+-10% 35VDC TA	56289	150D105X9035A2-DYS
A10A1C30	0180-0197	8	1	CAPACITOR-FXD 2.2UF+-10% 20VDC TA	56289	150D225X9020A2-DYS
A10A1C31	0160-4953	0	1	CAPACITOR-FXD .027UF +-5% 50VDC CER	04222	SR405A273JAAH
A10A1C32	0160-4298	6	1	CAPACITOR-FXD 4700PF +-20% 250VDC CER		815-250V X5R 472M
A10A1C33	0160-4951	8	1	CAPACITOR-FXD .033UF +-5% 50VDC CER	04222	SR405A333JAAH
A10A1C34	0160-4951	8	1	CAPACITOR-FXD .033UF +-5% 50VDC CER	04222	SR405A333JAAH
A10A1C35	0160-0574	3	1	CAPACITOR-FXD .022UF +-20% 100VDC CER	04222	SR201C223MAAH
A10A1C36	0180-0197	8	1	CAPACITOR-FXD 2.2UF+-10% 20VDC TA	56289	150D225X9020A2-DYS
A10A1CR1	1901-0040	1	1	DIODE-SWITCHING 30V 50MA 2NS DO-35	71468	
A10A1CR2	1901-0040	1	1	DIODE-SWITCHING 30V 50MA 2NS DO-35	71468	
A10A1CR3	0122-0085	1	1	DIODE-VVC 2.2PF 7% C3/C25-MIN=4.5	so545	1S2208(B)
A10A1CR4	0122-0085	1	1	DIODE-VVC 2.2PF 7% C3/C25-MIN=4.5	so545	1S2208(B)
A10A1CR5	1901-0040	1	1	DIODE-SWITCHING 30V 50MA 2NS DO-35	71468	
A10A1CR6	1901-0040	1	1	DIODE-SWITCHING 30V 50MA 2NS DO-35	71468	
A10A1CR7	1901-0040	1	1	DIODE-SWITCHING 30V 50MA 2NS DO-35	71468	
A10A1J2	1250-2112	1	1	CONNECTOR-RF SMB M SGL-HOLE-FR 50-OHM	98291	051-047-0259-220
A10A1J3	1250-2112	1	1	CONNECTOR-RF SMB M SGL-HOLE-FR 50-OHM	98291	051-047-0259-220
A10A1L1	9100-2257	6	1	INDUCTOR RF-CH-MLD 820NH +-10% .105D-INX	32159	1A 8203M +-10%

**Indicates factory-selected value*

HP Part Number 85660-60131

A10A1 PLL 1 VCO

Reference Designation	HP Part Number	C D	Qty	Description	Mfr Code	Mfr Part Number
A10A1L2	9100-2891	4	1	INDUCTOR RF-CH-MLD 50NH +-10% .105D-INX.	24226	10M050K-1
A10A1L3	9100-2257	6	1	INDUCTOR RF-CH-MLD 820NH +-10% .105D-INX	32159	1A 8203M +-10%
A10A1L4	85660-80004	4	1	INDUCTOR 30NH	28480	85660-80004
A10A1L5	85660-80005	5	1	INDUCTOR 4NH	28480	85660-80005
A10A1L6	9100-2258	7	1	INDUCTOR RF-CH-MLD 1.2UH +-10% .105D-INX	99800	1025-22
A10A1L7	85660-80008	a	1	INDUCTOR-ADJ .4MH	28480	85660-80008
A10A1L8	85660-80008	a	1	INDUCTOR-ADJ .4MH	28480	85660-80008
A10A1L9	9100-1647	6	1	INDUCTOR RF-CH-MLD 470UH +-5% .2D-INX.45	99800	2500-12
A10A1L10	9100-1788	6	1	CORE-FERRITE CHOKE-WIDEBAND IMP:680	02114	VK200 20/4B
A10A1L11	9100-1788	6	1	CORE-FERRITE CHOKE-WIDEBAND IMP:680	02114	VK200 20/4B
A10A1L12	9100-1788	6	1	CORE-FERRITE CHOKE-WIDEBAND IMP:680	02114	VK200 20/4B
A10A1L13	9100-2258	7	1	INDUCTOR RF-CH-MLD 1.2UH +-10% .105D-INX	99800	1025-22
A10A1L14	9100-2254	3	1	INDUCTOR RF-CH-MLD 390NH +-10% .105D-INX	24226	10M390K
A10A1L15	9100-2254	3	1	INDUCTOR RF-CH-MLD 390NH +-10% .105D-INX	24226	10M390K
A10A1L16	9100-2247	4	1	INDUCTOR RF-CH-MLD 100NH +-10% .105D-INX	24226	10M100K
A10A1MP1				NOT ASSIGNED		
A10A1MP3	2200-0101	0	2	SCREW-MACH 4-40 .188-IN-LG PAN-HD-POZI	77250	
A10A1MP4	2950-0078	9	3	NUT-HEX-DBL-CHAM 10-32-THD .067-IN-THK	74163	500220
A10A1MP5	2190-0124	4	6	LOCK WASHER .195 ID	28480	2190-0124
A10A1MP6	85660-00038	6	1	SHIELDING CAN	28480	85660-00038
A10A1MP7	85660-20052	6	1	COVER PC PLL1 VCO	28480	85660-20052
A10A1MP8	85660-20068	4	3	GROUND LUG	28480	85660-20068
A10A1MP9	86701-40001	9	1	EXTRACTOR, PC	28480	86701-40001
A10A1Q1	1855-0420	2	1	TRANSISTOR J-FET 2N4391 N-CHAN D-MODE TO	17856	2N4391
A10A1Q2	1854-0023	9	1	TRANSISTOR NPN SI TO-18 PD=360MW	25403	
A10A1Q3	1854-0345	8	1	TRANSISTOR NPN 2N5179 SI TO-72 PD=200MW	04713	2N5179
A10A1Q4	1854-0345	8	1	TRANSISTOR NPN 2N5179 SI TO-72 PD=200MW	04713	2N5179
A10A1Q5	1854-0345	8	1	TRANSISTOR NPN 2N5179 SI TO-72 PD=200MW	04713	2N5179
A10A1Q6	1855-0420	2	1	TRANSISTOR J-FET 2N4391 N-CHAN D-MODE TO	17856	2N4391
A10A1Q7	1855-0420	2	1	TRANSISTOR J-FET 214391 N-CHAN D-MODE TO	17856	2N4391
A10A1Q8	1855-0420	2	1	TRANSISTOR J-FET 2N4391 N-CHAN D-MODE TO	17856	2N4391
A10A1Q9	1854-0023	9	1	TRANSISTOR NPN SI TO-18 PD=360MW	25403	
A10A1Q10	1854-0023	9	1	TRANSISTOR NPN SI TO-18 PD=360MW	25403	
A10A1Q11	1854-0345	8	1	TRANSISTOR NPN 2N5179 SI TO-72 PD=200MW	04713	2N5179
A10A1R1	0757-0395	1	1	RESISTOR 56.2 +-1% .125W TF TC=O+-100	19701	SFR25H
A10A1R2	0757-0280	3	1	RESISTOR 1K +-1% .125W TF TC=O+-100	19701	SFR25H
A10A1R3	0757-0317	7	1	RESISTOR 1.33K +-1% .125W TF TC=O+-100	19701	SFR25H
A10A1R4	0757-0441	8	1	RESISTOR 8.25K +-1% .125W TF TC=O+-100	19701	SFR25H
A10A1R5	0757-0280	3	1	RESISTOR 1K +-1% .125W TF TC=O+-100	19701	SFR25H
A10A1R6	0757-0123	3	1	RESISTOR 34.8K +-1% .125W TF TC=O+-100	19701	SFR25H
A10A1R7	0757-0441	8	1	RESISTOR 8.25K +-1% .125W TF TC=O+-100	19701	SFR25H
A10A1R8	0757-0280	3	1	RESISTOR 1K +-1% .125W TF TC=O+-100	19701	SFR25H
A10A1R9	0698-3444	1	1	RESISTOR 316 1% .125W TF TC=O+-100	19701	SFR25H
A10A1R10	0757-0460	1	1	RESISTOR 61.9K +-1% .125W TF TC=O+-100	19701	SFR25H
A10A1R11	0757-0280	3	1	RESISTOR 1K +-1% .125W TF TC=O+-100	19701	SFR25H
A10A1R12	0698-0082	7	1	RESISTOR 464 1% .125W TF TC=O+-100	19701	SFR25H
A10A1R13	0757-0428	1	1	RESISTOR 1.62K +-1% .125W TF TC=O+-100	19701	SFR25H
A10A1R14	0757-0280	3	1	RESISTOR 1K +-1% .125W TF TC=O+-100	19701	SFR25H

**Indicates factory-selected value*

HP Part Number 85660-60131

A10A1 PLL 1 VCO

Reference Designation	HP Part Number	CD	Qty	Description	Mfr Code	Mfr Part Number
A10A1R15	0757-0402	1	1	RESISTOR 110 +-1% .125W TF TC=O+-100	19701	SFR25H
A10A1R16	0698-7195	7	1	RESISTOR 19.6 +-1% .05W TF TC=O+-100	19701	50635
A10A1R17	0757-0280	3	1	RESISTOR 1K +-1% .125W TF TC=O+-100	19701	SFR25H
A10A1R18	0698-3155	1	1	RESISTOR 4.64K 1% .125W TF TC=O+-100	19701	SFR25H
A10A1R19	0757-0428	1	1	RESISTOR 1.62K +-1% .125W TF TC=O+-100	19701	SFR25H
A10A1R20	0757-0395	1	1	RESISTOR 56.2 +-1% .125W TF TC=O+-100	19701	SFR25H
A10A1R21	0698-3438	3	1	RESISTOR 147 1% .125W TF TC=O+-100	19701	SFR25H
A10A1R22	0698-3438	3	1	RESISTOR 147 1% .125W TF TC=O+-100	19701	SFR25H
A10A1R23	0757-0458	7	1	RESISTOR 51.1K +-1% .125W TF TC=O+-100	19701	SFR25H
A10A1R24	0757-0289	2	1	RESISTOR 13.3K +-1% .125W TF TC=O+-100	19701	SFR25H
A10A1R25	0757-0289	2	1	RESISTOR 13.3K +-1% .125W TF TC=O+-100	19701	SFR25H
A10A1R26	0757-0416	7	1	RESISTOR 511 +-1% .125W TF TC=O+-100	19701	SFR25H
A10A1R27	0757-0123	3	1	RESISTOR 34.8K +-1% .125W TF TC=O+-100	19701	SFR25H
A10A1R28	0757-0123	3	1	RESISTOR 34.8K +-1% .125W TF TC=O+-100	19701	SFR25H
A10A1R29	0757-0440	7	1	RESISTOR 7.5K +-1% .125W TF TC=O+-100	19701	SFR25H
A10A1R30	0757-0440	7	1	RESISTOR 7.5K +-1% .125W TF TC=O+-100	19701	SFR25H
A10A1R31	0757-0465	6	1	RESISTOR 100K +-1% .125W TF TC=O+-100	19701	SFR25H
A10A1R32	0757-0289	2	1	RESISTOR 13.3K +-1% .125W TF TC=O+-100	19701	SFR25H
A10A1R33	0698-3159	5	1	RESISTOR 26.1K 1% .125W TF TC=O+-100	19701	SFR25H
A10A1R34	0757-0290	5	1	RESISTOR 6.19K +-1% .125W TF TC=O+-100	19701	SFR25H
A10A1R35	0757-0458	7	1	RESISTOR 51.1K +-1% .125W TF TC=O+-100	19701	SFR25H
A10A1R36	0757-0402	1	1	RESISTOR 110 +-1% .125W TF TC=O+-100	19701	SFR25H
A10A1R37	0757-0442	9	1	RESISTOR 10K +-1% .125W TF TC=O+-100	19701	SFR25H
A10A1R38	0757-0123	3	1	RESISTOR 34.8K +-1% .125W TF TC=O+-100	19701	SFR25H
A10A1R39	0757-0416	7	1	RESISTOR 511 +-1% .125W TF TC=O+-100	19701	SFR25H
A10A1R40	0757-0416	7	1	RESISTOR 511 +-1% .125W TF TC=O+-100	19701	SFR25H
A10A1R41	0757-0416	7	1	RESISTOR 511 +-1% .125W TF TC=O+-100	19701	SFR25H
A10A1R42	0698-7188	8	1	RESISTOR 10 +-1% .05W TF TC=O+-100	19701	50635
A10A1R43	0757-0280	3	1	RESISTOR 1K +-1% .125W TF TC=O+-100	19701	SFR25H
A10A1R44	0757-0280	3	1	RESISTOR 1K +-1% .125W TF TC=O+-100	19701	SFR25H
A10A1R45	0757-0280	3	1	RESISTOR 1K +-1% .125W TF TC=O+-100	19701	SFR25H
A10A1R46	0757-0280	3	1	RESISTOR 1K +-1% .125W TF TC=O+-100	19701	SFR25H
A10A1R47	0757-0280	3	1	RESISTOR 1K +-1% .125W TF TC=O+-100	19701	SFR25H
A10A1R48	0757-0462	3	1	RESISTOR 75K +-1% .125W TF TC=O+-100	19701	SFR25H
A10A1R49	0757-0462	3	1	RESISTOR 75K +-1% .125W TF TC=O+-100	19701	SFR25H
A10A1R50	0757-0462	3	1	RESISTOR 75K +-1% .125W TF TC=O+-100	19701	SFR25H
A10A1R51	0757-0462	3	1	RESISTOR 75K +-1% .125W TF TC=O+-100	19701	SFR25H
A10A1TP1	0360-0124	3	1	CONNECTOR-SGL CONT PIN .04-IN-BSC-SZ RND	97300	
A10A1TP2	0360-0124	3	1	CONNECTOR-SGL CONT PIN .04-IN-BSC-SZ RND	97300	
A10A1TP3	0360-0124	3	1	CONNECTOR-SGL CONT PIN .04-IN-BSC-SZ RND	97300	
A10A1TP4	0360-0124	3	1	CONNECTOR-SGL CONT PIN .04-IN-BSC-SZ RND	97300	
A10A1U1	1810-0204	6	1	NETWORK-RES 8-SIP 1.0K OHM X 7	11236	750-81
A10A1U2	1820-0802	1	1	IC GATE ECL NOR QUAD 2-INP	04713	MC10102P
A10A1U3	1820-1888	5	1	IC PRESCR ECL	04713	MC12013L
A10A1U4	1826-0161	7	1	IC OP AMP GP QUAD 14-DIP-P PKG	27014	LM324N
A10A1U5	1820-1195	7	1	IC FF TTL LS D-TYPE POS-EDGE-TRIG COM CL	01295	SN74LS175N
A10A1U6	5081-8117	3	1	SCREEN 1826-0092	28480	5081-8117

**Indicates factory-selected value*

HP Part Number 85660-60131

A10A1 PLL 1 VCO

Reference Designatior	HP Part Number	CD	Qty	Description	Mfr Code	Mfr Part Number
A10A1VR1	.902-3048	7	1	DIODE-ZNR 3.48V 5% DO-35 PD=.4W	04713	
A10A1W1	35660-60089	3	1	CABLE ASSEMBLY, BROWN	2848C	85660-60089

**Indicates factoy-selected value*

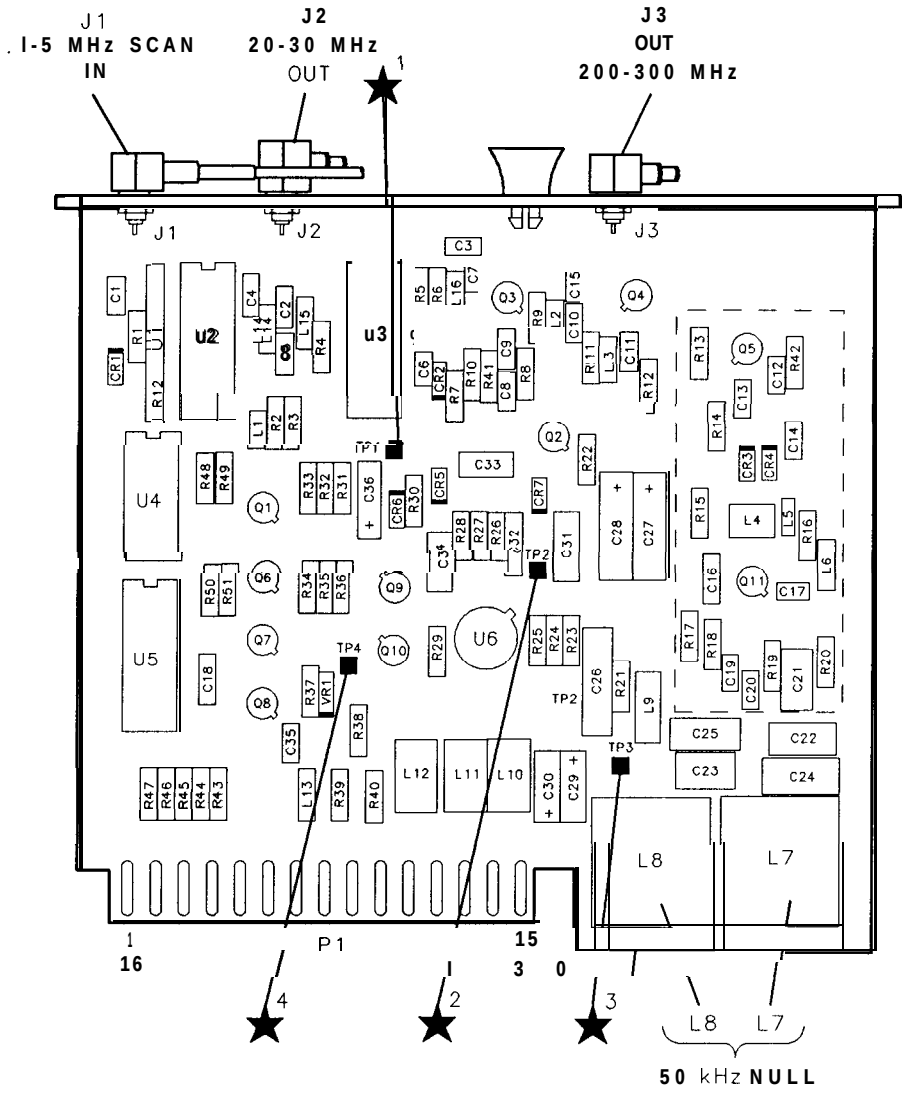

A10A1 PLL1 VCO Component Locations, 85660-60131

A10A1 PHASE LOCK LOOP 1 (PLL1) VOLTAGE-CONTROLLED OSCILLATOR (VCO) 85660-60131 (SERIAL PREFIX:2410A)

P1

PIN	SIGNAL	TO/FROM	FUNCTION BLOCK
1	GND		G
16	GND		G
2	IOB8	A15P2-9	B
17	IOB9	A15P2-27	B
3	IOB10	A15P2-10	B
18	IOB11	A15P2-28	B
4	LCK4	A12P3-14	B
19	GND		NC
5	GND		G
20	GND		G
6	GND		G
21	GND		G
7	GND		G
22	GND		G
8	GND		G
23	SW1	A10A7P1-32	E
9	NC		
24	PHASE 1	A10A2P1-11	A
10	GND		G
25	PHASE 2	A10A2P1-12	A
11	GND		G
26	GND		G
12	-10V		G
27	-10V		G
13	+20V		G
28	+20V		G
14	GND		G
29	GND		G
15	+5.2V		G
30	+5.2V		G

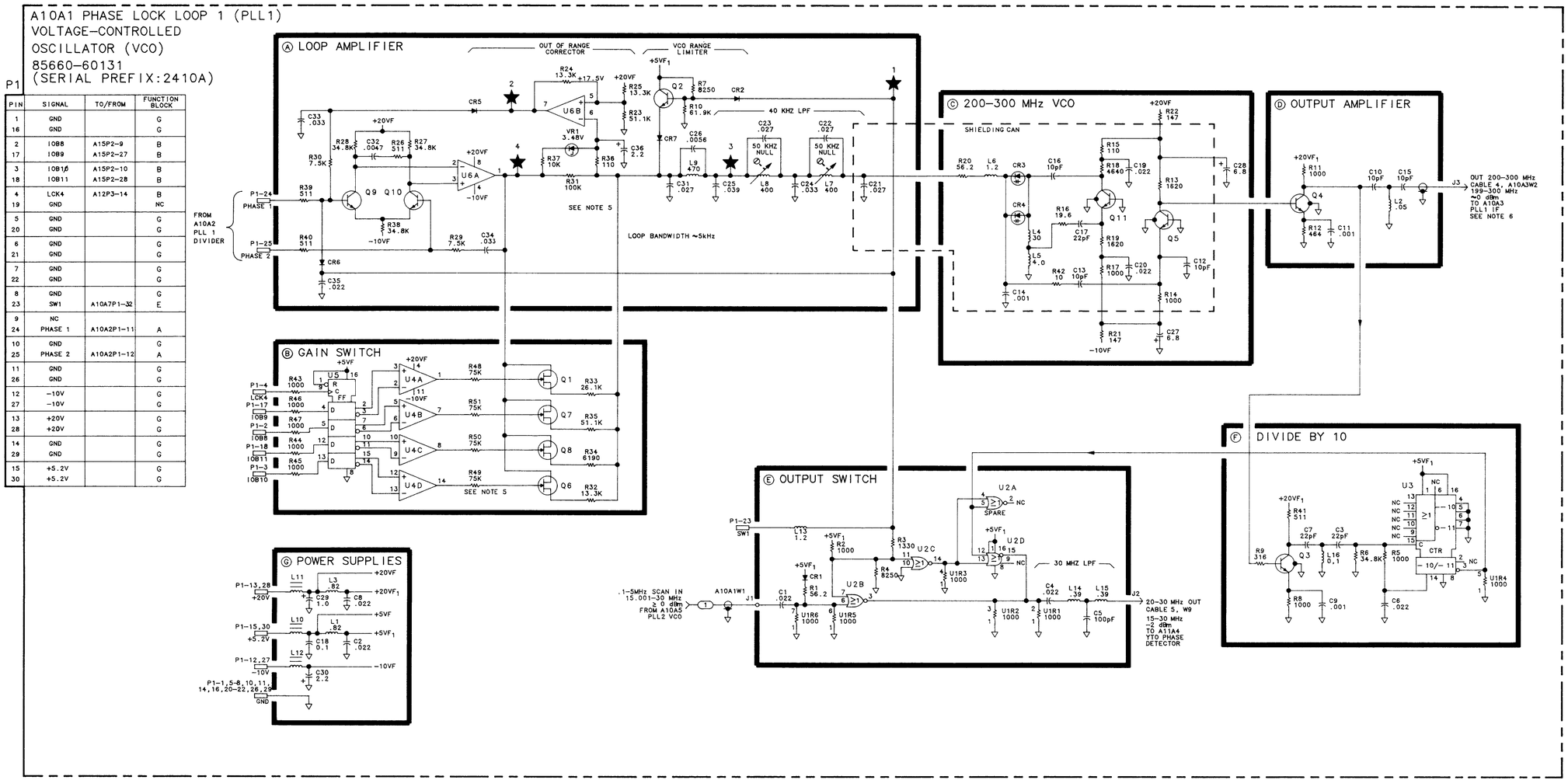

NOTES:

1. REFERENCE DESIGNATORS WITHIN THIS ASSEMBLY ARE ABBREVIATED. FOR COMPLETE REFERENCE DESIGNATION, PREFIX ABBREVIATION WITH ASSEMBLY DESIGNATION.
2. UNLESS OTHERWISE INDICATED: RESISTANCE IS IN OHMS (Ω) CAPACITANCE IS IN MICROFARADS (μF) INDUCTANCE IS IN MICROHENRIES (μH)
3. UNLESS OTHERWISE INDICATED: SIGNALS ENTER AT LEFT SIDE AND EXIT AT RIGHT SIDE OF FUNCTION BLOCKS.
4. MNEMONICS TABLE:

MNEMONIC	DESCRIPTION
IOB8-11	INSTRUMENT BUS DATA BITS 8 THRU 11
LCK4	LOW-CLOCK4
SW1	SWITCH 1

5. CHECK GAIN SWITCH WITH FREQUENCY SPAN 0Hz:

CENTER FREQUENCY	SWITCHES ON
44.57 MHz	Q8
45.57 MHz	Q6
46.57 MHz	Q6,Q1
47.57 MHz	Q6,Q7

6. FREQUENCIES AT J3 ARE:

START FREQUENCIES: 200.000010 TO 300.000000 MHz
STOP FREQUENCIES: 299.999000 TO 199.000200 MHz

A10A1

A10A1 PLL1 VCO, SCHEMATIC DIAGRAM

A10A2

A10A2 Phase Lock Loop 1 (PLL1) Divider, Circuit Description

A10A2 functions as a programmable frequency divider and a phase/frequency detector. The divider is programmed by the Al5 Controller to divide the input frequency by the PLL1 divide number N1 down to 5 MHz. This is then compared with a 5 MHz reference in the phase/frequency detector. The detector output, after amplification and integration, tunes the frequency of the PLL1 voltage-controlled oscillator (VCO).

The PLL1 divide number N1 always falls in the range between 3.60 and 13.97. The integer part is coded in four binary bits while the fractional part (0.00 to 0.99) is coded in two 4-bit BCD bytes.

Divide by 2 Ⓐ

U5 constitutes a 3-stage limiting amplifier. U5 is an ECL triple-line receiver which changes the input to the proper amplitude and dc level (approximately +3 V low and +4 V high) for driving the subsequent divider. U4A is a D-type flip-flop which divides the limiting amplifier output by 2.

Input Latch Ⓑ

U9 and U10 are latches which store the divider programming number. The number is clocked into the latches from the instrument bus with LCK4.

Divide by N Ⓒ

U12 is a 4-bit binary counter which is programmed with the integer part (3 to 13) of the PLL1 divide number N1. In operation it is clocked by the output of U4A and counts down to 1. On the next clock pulse, the programming number is loaded into the counter, and the cycle repeats. Loading time is sensed by U14B when the count is at 2. The next clock pulse causes U14B to change states which enables the loading of U12 on the subsequent clock pulse.

Fractional Divide Ⓓ

The fractional divide works on the pulse-swallowing principle. Consider a divider that divides by N for P-A output pulses and by N + 1 for A output pulses. Note that the total output pulses is P. The number of input pulses to get P output pulses is
N(P-A) + (N + l)A = NP + A.
Therefore, the divide ratio is the number of input pulses divided by the number of output pulses which is equal to N •l- A/P. In this case P is 100, so N represents the integer portion of the divide number while A represents the fractional part times 100.

An example best illustrates how the fractional divide works. If the PLL2 divide number N1 is 8.57, then N=8 and A=57. The integer divider normally divides by N each divide cycle.

However, the Fractional Divide circuit can set the integer divider to a "hold" state every N pulses, causing it to "swallow" a pulse and effectively divide by N+1 for a cycle. In this example, the Fractional Divide circuit selectively causes the integer divider to "swallow" a pulse in 57 out of every 100 divide cycles. The integer divider thus divides by 8 for 43 out of every 100 cycles and by 9 for 57 out of every 100 cycles, averaging out to the desired value of 8.57. Filtering in the phase-lock loop causes the PLL1 VCO to lock steadily to this average value.

The fractional divide number is programmed into U1 and U2 as two 4-bit BCD bytes. U1 and U2 are TTL decade rate multipliers connected in cascade. The input comes from the integer divide counter U12 via U4B and the ECL to TTL translator consisting of U3B and Q1. For every 100 clock pulses into U1 and U2, there is output from U3A equal to 100 times the fractional part of the divide number N1. For example, if N1 = 8.57, then 57 pulses occur at U3A output for every 100 pulses into U1/U2. U3A translates the TTL outputs of U1 and U2 to ECL, which then are latched by U15B, synchronized by U14A, and fed back to U12 to control pulse "swallowing."

Phase/Frequency Detector Ⓔ

The phase/frequency detector compares the divider output with a 5 MHz reference frequency. When the two inputs are in phase, the outputs are ECL high, approximately +4 V, with very narrow pulses at a 5 MHz rate. When the inputs are the same frequency but different in phase, one output line is a pulse with a width corresponding to the phase difference; the other output is high with very narrow pulses. For a difference in input frequencies, the outputs are pulses of varying widths, but with different average dc voltage levels. The sign of this dc voltage is set by which frequency is higher and the magnitude is determined by the amount of frequency difference.

Reference Divide by 2 Ⓕ

U7C is an input buffer amplifier which generates the proper level for ECL (approximately +3 V low and +4 V high). U15A divides the 10 MHz input by 2 and applies this 5 MHz to the phase/frequency detector.

Phase Lock Indicator Ⓖ

The input to the phase lock indicator is the wired OR Q outputs of the phase/frequency detector. This input is ECL low (approximately 3 V) when the loop is locked; in this condition, the dc voltage at the base of Q3 is lower than that at the base of Q2 so Q3 is on and Q2 is off. If the loop unlocks, the input to the phase lock indicator consists of varying width pulses, the average dc value of which is about half way between a logic low and high. The voltage divider consisting of R35 and R15 causes the voltage at Q2 base to be lower than that at Q3 base, so Q2 turns on indicating an unlock condition.

If PLL1 unlocks, LED DS1 will turn off, and the CRT message PL1 UNLOCK will appear. However, the CRT message PLI UNLOCK will also appear if PLL3 unlocks, as indicated when A10A4DS1 turns off. In spans above n x 5 MHz and spans of n x 100 kHz and below, PLL3 functions to shift the output of PLL2 up in frequency by 160 MHz for further division by PLL1. (n is the harmonic mixing number.) The two loops PLL3 and PLL1 always operate in conjunction; if PLL3 unlocks, then the output of PLL1 is incorrect whether or not PLL1 unlocks. The single CRT message PL1 UNLOCK is used to indicate an unlock in either PLL1 or PLL3.

HP Part Number 85660-60023

A10A2 PLL 1 Divider

Reference Designation	HP Part Number	C D	Qty	Description	Mfr Code	Mfr Part Number
A10A2	85660-60023	5	1	BOARD ASSEMBLY, PLL 1 DIVIDER	2848C	85660-60023
A10A2C1	0160-0574	3	1	CAPACITOR-FXD .022UF +-20% 100VDC CER	04222	SR201C223MAAH
A10A2C2	0160-0574	3	1	CAPACITOR-FXD .022UF +-20% 100VDC CER	04222	SR201C223MAAH
A10A2C3	0160-0574	3	1	CAPACITOR-FXD .022UF +-20% 100VDC CER	04222	SR201C223MAAH
A10A2C4	0160-0574	3	1	CAPACITOR-FXD .022UF +-20% 100VDC CER	04222	SR201C223MAAH
A10A2C5	0160-0574	3	1	CAPACITOR-FXD .022UF +-20% 100VDC CER	04222	SR201C223MAAH
A10A2C6	0160-0574	3	1	CAPACITOR-FXD .022UF +-20% 100VDC CER	04222	SR201C223MAAH
A10A2C7	0160-0570	9	1	CAPACITOR-FXD 220PF +-20% 100VDC CER	04222	SR201C221MAAH
A10A2C8	0160-0570	9	1	CAPACITOR-FXD 220PF +-20% 100VDC CER	04222	SR201C221MAAH
A10A2C9	0160-0574	3	1	CAPACITOR-FXD .022UF +-20% 100VDC CER	04222	SR201C223MAAH
A10A2C10	0160-4084	8	1	CAP-FXD 0.1uF 50 V	56289	1C20X7R104M050B
A10A2C11	0160-3875	3	1	CAPACITOR-FXD 22PF +-5% 200VDC CER 0+-30		FD12C0G2D220J
A10A2C12	0160-0574	3	1	CAPACITOR-FXD .022UF +-20% 100VDC CER	04222	SR201C223MAAH
A10A2C13	0180-2207	5	1	CAPACITOR-FXD 100UF+-10% 10VDC TA	56289	150D107X9010R2-DYS
A10A2CR1	1901-0040	1	1	DIODE-SWITCHING 30V 50MA 2NS DO-35	71468	
A10A2CR2	1901-0040	1	1	DIODE-SWITCHING 30V 50MA 2NS DO-35	71468	
A10A2DS1	1990-0485	5	1	LED-LAMP LUM-INT=2MCD IF=30MA-MAX BVR=5V	28480	HLMP-1503
A10A2J2	1250-2112	1	1	CONNECTOR-RF SMB M SGL-HOLE-FR 50-OHM	98291	051-047-0259-220
A10A2L1	9100-2255	4	1	INDUCTOR RF-CH-MLD 470NH +-10% .105D-INX	24226	10M470K
A10A2L2	9100-1788	6	1	CORE-FERRITE CHOKE-WIDEBAND IMP:680	02114	VK200 20/4B
A10A2MP1				NOT ASSIGNED		
A10A2MP2	0520-0128	7	2	SCREW-MACH 2-56 .25-IN-LG PAN-HD-POZI	77250	
A10A2MP3	0590-0533	5	2	THREADED INSERT-NUT 2-56 .06-IN-LG SST	46384	KFS2-256
A10A2MP4	1205-0285	0	1	HEAT SINK SGL DIP	13103	6007A-TOP
A10A2MP5	2190-0112	0	2	WASHER-LK HLCL NO. 2 .088-IN-ID	77339	
A10A2MP6	2190-0124	4	4	WASHER-LK INTL T NO. 10 .195-IN-ID	98291	3002-26
A10A2MP7	2200-0101	0	2	SCREW-MACH 4-40 .188-IN-LG PAN-HD-POZI	77250	
A10A2MP8	2950-0078	9	2	NUT-HEX-DEL-CHAM 10-32-THD .067-IN-THK	74163	500220
A10A2MP11	85660-00012	6	1	HEAT SINK BOTTOM	28480	85660-00012
A10A2MP12	85660-20053	7	1	PC COVER, PLL 1 DIVIDER	28480	85660-20053
A10A2MP13	85660-20068	4	2	GROUND LUG	28480	85660-20068
A10A2MP14	86701-40001	9	2	EXTRACTOR PC	28480	86701-40001
A10A2Q1	1853-0405	9	1	TRANSISTOR PNP SI PD=300MW FT=850MHZ	04713	2N4209
A10A2Q2	1853-0451	5	1	TRANSISTOR PNP 2N3799 SI TO-18 PD=360MW	04713	
A10A2Q3	1853-0451	5	1	TRANSISTOR PNP 2N3799 SI TO-18 PD=360MW	04713	
A10A2R1	0757-0280	3	1	RESISTOR 1K +-1% .125W TF TC=0+-100	19701	SFR25H
A10A2R2	0698-3431	6	1	RESISTOR 23.7 1% .125W TF TC=0+-100	19701	SFR25H
A10A2R3	0757-0403	2	1	RESISTOR 121 +-1% .125W TF TC=0+-100	19701	SFR25H
A10A2R4	0757-0280	3	1	RESISTOR 1K +-1% .125W TF TC=0+-100	19701	SFR25H
A10A2R5	0757-0280	3	1	RESISTOR 1K +-1% .125W TF TC=0+-100	19701	SFR25H
A10A2R6	0757-0394	0	1	RESISTOR 51.1 +-1% .125W TF TC=0+-100	19701	SFR25H
A10A2R7	0757-0416	7	1	RESISTOR 511 +-1% .125W TF TC=0+-100	19701	SFR25H
A10A2R8	0757-0416	7	1	RESISTOR 511 +-1% .125W TF TC=0+-100	19701	SFR25H
A10A2R9	0698-0083	8	1	RESISTOR 1.96K 1% .125W TF TC=0+-100	19701	SFR25H
A10A2R10	0698-3440	7	1	RESISTOR 196 1% .125W TF TC=0+-100	19701	SFR25H
A10A2R11	0757-0280	3	1	RESISTOR 1K +-1% .125W TF TC=0+-100	19701	SFR25H
A10A2R12	0757-0416	7	1	RESISTOR 511 +-1% .125W TF TC=0+-100	19701	SFR25H

**Indicates factory-selected value*

HP Part Number 85660-60023

A10A2 PLL 1 Divider

Reference Designation	HP Part Number	CD	Qty	Description	Mfr Code	Mfr Part Number
A10A2R13	1757-0416		1	RESISTOR 511 +-1% .125W TF TC=O+-100	19701	SFR25H
A10A2R14	0698-3440		1	RESISTOR 196 1% .125W TF TC=O+-100	19701	SFR25H
A10A2R15	1757-0442		1	RESISTOR 10K +-1% .125W TF TC=O+-100	19701	SFR25H
A10A2R16	0757-0280		1	RESISTOR 1K +-1% .125W TF TC=O+-100	19701	SFR25H
A10A2R17	0698-3440		1	RESISTOR 196 1% .125W TF TC=O+-100	19701	SFR25H
A10A2R18	0757-0280		1	RESISTOR 1K +-1% .125W TF TC=O+-100	19701	SFR25H
A10A2R19	0757-0280		1	RESISTOR 1K +-1% .125W TF TC=O+-100	19701	SFR25H
A10A2R20	0757-0280		1	RESISTOR 1K +-1% .125W TF TC=O+-100	19701	SFR25H
A10A2R21	0757-0280		1	RESISTOR 1K +-1% .125W TF TC=O+-100	19701	SFR25H
A10A2R22	0757-0280		1	RESISTOR 1K +-1% .125W TF TC=O+-100	19701	SFR25H
A10A2R23	1757-0280		1	RESISTOR 1K +-1% .125W TF TC=O+-100	19701	SFR25H
A10A2R24	0757-0280		1	RESISTOR 1K +-1% .125W TF TC=O+-100	19701	SFR25H
A10A2R25	1757-0280		1	RESISTOR 1K +-1% .125W TF TC=O+-100	19701	SFR25H
A10A2R26	1757-0280		1	RESISTOR 1K +-1% .125W TF TC=O+-100	19701	SFR25H
A10A2R27	0757-0280		1	RESISTOR 1K +-1% .125W TF TC=O+-100	19701	SFR25H
A10A2R28	1757-0280		1	RESISTOR 1K +-1% .125W TF TC=O+-100	19701	SFR25H
A10A2R29	1757-0280		1	RESISTOR 1K +-1% .125W TF TC=O+-100	19701	SFR25H
A10A2R30	1757-0416		1	RESISTOR 511 +-1% .125W TF TC=O+-100	19701	SFR25H
A10A2R31	0698-3440		1	RESISTOR 196 1% .125W TF TC=O+-100	19701	SFR25H
A10A2R32	0757-0403		1	RESISTOR 121 +-1% .125W TF TC=O+-100	19701	SFR25H
A10A2R33	0757-0419		1	RESISTOR 681 +-1% .125W TF TC=O+-100	19701	SFR25H
A10A2R34	0757-0280		1	RESISTOR 1K +-1% .125W TF TC=O+-100	19701	SFR25H
A10A2R35	0757-0280		1	RESISTOR 1K +-1% .125W TF TC=O+-100	19701	SFR25H
A10A2TP1	1251-0600		1	CONNECTOR-SGL CONT PIN 1.14-MM-BSC-SZ SQ	27264	16-06-0034
A10A2TP2	1251-0600		1	CONNECTOR-SGL CONT PIN 1.14-MM-BSC-SZ SQ	27264	16-06-0034
A10A2TP3	1251-0600		1	CONNECTOR-SGL CONT PIN 1.14-MM-BSC-SZ SQ	27264	16-06-0034
A10A2TP4	1251-0600		1	CONNECTOR-SGL CONT PIN 1.14-MM-BSC-SZ SQ	27264	16-06-0034
A10A2TP5	1251-0600		1	CONNECTOR-SGL CONT PIN 1.14-MM-BSC-SZ SQ	27264	16-06-0034
A10A2TP6	1251-0600		1	CONNECTOR-SGL CONT PIN 1.14-MM-BSC-SZ SQ	27264	16-06-0034
A10A2TP7	1251-0600		1	CONNECTOR-SGL CONT PIN 1.14-MM-BSC-SZ SQ	27264	16-06-0034
A10A2TP8	1251-0600		1	CONNECTOR-SGL CONT PIN 1.14-MM-BSC-SZ SQ	27264	16-06-0034
A10A2TP9	1251-0600		1	CONNECTOR-SGL CONT PIN 1.14-MM-BSC-SZ SQ	27264	16-06-0034
A10A2TP10	1251-0600		1	CONNECTOR-SGL CONT PIN 1.14-MM-BSC-SZ SQ	27264	16-06-0034
A10A2TP11	1251-0600		1	CONNECTOR-SGL CONT PIN 1.14-MM-BSC-SZ SQ	27264	16-06-0034
A10A2TP12	1251-0600		1	CONNECTOR-SGL CONT PIN 1.14-MM-BSC-SZ SQ	27264	16-06-0034
A10A2TP13	1251-0600		1	CONNECTOR-SGL CONT PIN 1.14-MM-BSC-SZ SQ	27264	16-06-0034
A10A2TP14	1251-0600		1	CONNECTOR-SGL CONT PIN 1.14-MM-BSC-SZ SQ	27264	16-06-0034
A10A2U1	1820-0909		1	C MULTR TTL	01295	SN74167N
A10A2U2	1820-0909		1	C MULTR TTL	01295	SN74167N
A10A2U3	1820-0808		1	C GATE ECL NOR DUAL 3-INP	04713	MC10111P
A10A2U4	1820-1225		1	C FF ECL D-M/S DUAL	04713	MC10231P
A10A2U5	1820-1320		1	C RCVR ECL LINE RCVR TPL 2-INP	04713	MC10216L
A10A2U6	1810-0204		1	IETWORK-RES 8-SIP 1.0K OHM X 7	11236	750-81
A10A2U7	1820-0802		1	C GATE ECL NOR QUAD 2-INP	04713	MC10102P
A10A2U8	1810-0204		1	ETWORK-RES 8-SIP 1.0K OHM X 7	11236	750-81
A10A2U9	1820-1196		1	C FF TTL LS D-TYPE POS-EDGE-TRIG COM CL	01295	SN74LS174N
A10A2U10	1820-1196		1	C FF TTL LS D-TYPE POS-EDGE-TRIG COM CL	01295	SN74LS174N
A10A2U11	1810-0204		1	ETWORK-RES 8-SIP 1.0K OHM X 7	11236	750-81

Indicates factory-selected value

HP Part Number 85660-60023

A10A2 PLL 1 Divider

Reference Designation	HP Part Number	CD	Qty	Description	Mfr Code	Mfr Part Number
A10A2U12	1820-0821	4	1	IC CNTR ECL BIN UP/DOWN SYNCHRO POS-EDGE	04713	MC10136L
A10A2U13	1810-0204	6	1	NETWORK-RES 8-SIP 1.0K OHM X 7	11236	750-81
A10A2U14	1820-0817	8	1	IC FF ECL O-M/S DUAL	04713	MC10131P
A10A2U15	1820-0817	8	1	IC FF ECL O-M/S DUAL	04713	MC10131P
A10A2U16	1820-0817	8	1	IC FF ECL O-M/S DUAL	04713	MC10131P
A10A2VR1	1902-3059	0	1	DIODE-ZNR 3.83V 5% DO-35 PD=.4W	04713	
A10A2W1	35660-60090	6	1	CABLE ASSEMBLY, ORANGE	28480	85660-60090

**Indicates factory-selected value*

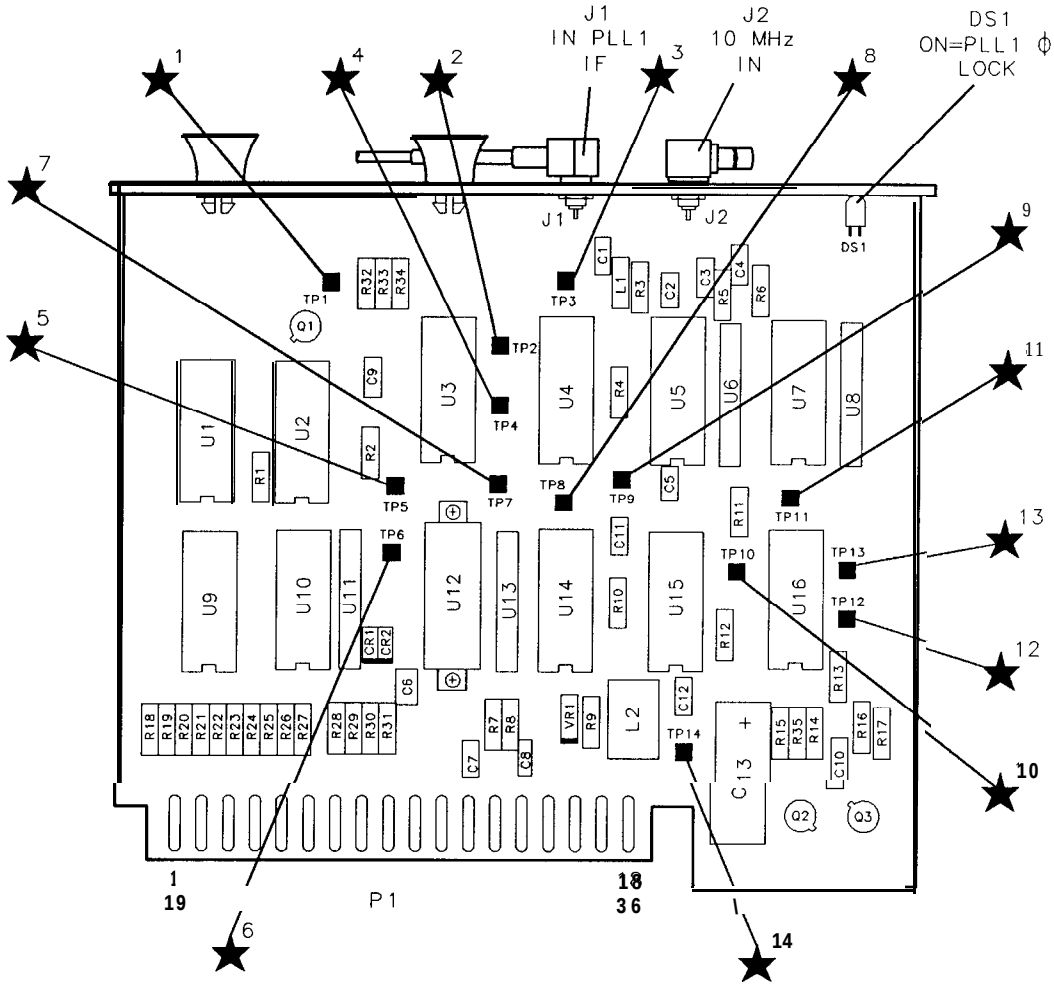

A10A2 PLL1 Divider Component Locations, 85660-60023

A10A2 PHASE LOCK LOOP 1 (PLL1) DIVIDER

85660-60023
(SERIAL PREFIX:2410A)

P1

PIN	SIGNAL	TO/FROM	FUNCTION BLOCK
1	10Ø#	A15P2-5	B
19	10Ø1	A15P2-23	B
2	10Ø2	A15P2-6	B
20	10Ø3	A15P2-24	B
3	10Ø4	A15P2-7	B
21	10Ø5	A15P2-25	B
4	10Ø6	A15P2-8	B
22	10Ø7	A15P2-26	B
5	10Ø8	A15P2-9	B
23	10Ø9	A15P2-27	B
6	GND		H
24	GND		H
7	10Ø1#	A15P2-10	B
25	10Ø11	A15P2-28	B
8	LCK4	A12P3-14	B
26	HUL1	A12P3-13	G
9	GND		H
27	GND		H
10	GND		H
28	GND		H
11	PHASE 1	A10A1P1-24	E
29	GND		NC
12	PHASE 2	A10A1P1-25	E
30	GND		NC
13	GND		H
31	GND		H
14	GND		H
32	GND		H
15	GND		H
33	GND		H
16	GND		H
34	GND		H
17	GND		H
35	GND		H
18	+5.2V		H
36	+5.2V		H

IN PLL 1 IF 35-140 MHz -10 dBm FROM A10A3 PLL1 IF

A10A2W1

Ⓐ DIVIDE BY 2

INPUT AMPLIFIER (SEE NOTE 4)

Ⓒ DIVIDE BY N

(SEE NOTE 6)

Ⓑ INPUT LATCH

TTL→ECL LEVEL CONVERTER

(SEE NOTE 4)

Ⓓ FRACTIONAL DIVIDE

TENTHS (BCD)

HUNDREDTHS (BCD)

N (BINARY 3-13)

Ⓔ PHASE/FREQUENCY DETECTOR

(SEE NOTE 4)

TO A10A1 PLL1 VCO

Ⓕ REFERENCE DIVIDE BY 2

10 MHz IN CABLE B6,W6 10 MHz FROM A7A1 REFERENCE PHASE DETECTOR

CAUTION ESD SENSITIVE

Ⓖ PHASE LOCK INDICATOR

Ⓗ POWER SUPPLIES

NOTES:

1. REFERENCE DESIGNATORS WITHIN THIS ASSEMBLY ARE ABBREVIATED. FOR COMPLETE REFERENCE DESIGNATION PREFIX ABBREVIATION WITH ASSEMBLY DESIGNATION.
2. UNLESS OTHERWISE INDICATED: RESISTANCE IS IN OHMS (Ω) CAPACITANCE IS IN MICROFARADS(μF) INDUCTANCE IS IN MICROHENRIES(μH)
3. UNLESS OTHERWISE INDICATED: SIGNALS ENTER AT LEFT SIDE AND EXIT AT RIGHT SIDE OF FUNCTION BLOCKS.
4. PARTIAL COMPONENTS NOT USED:
   - U5D
   - U8R7
   - U8R6
   - U11R3
5. MNEMONICS TABLE:

MNEMONIC	DESCRIPTION
10Ø8-11	INSTRUMENT BUS DATA BITS 8 THRU 11
LCK 4	LOW=CLOCK 4
HUL1	HIGH=PHASE LOCK LOOP 1 OR 3 UNLOCKED
PSW	PULSE SMALLOW

6. CHECK N/INPUT LATCH WITH FREQUENCY SPAN 0 Hz:

CENTER FREQ	N
44.57MHz	8
45.57MHz	4
46.57MHz	6
47.57MHz	5

A10A2

A10A2 PLL1 DIVIDER, SCHEMATIC DIAGRAM DIAGRAM

A10A3

A10A3 Phase Lock Loop 1 (PLL1) IF, Circuit Description

A10A3 functions to mix the output of A10A4 (160.15 to 166 MHz) with the LO output from A10A1 (200 to 300 MHz). The output of this assembly is the difference frequency suitably filtered and amplified to about -10 dBm.

LO Amplifier Ⓐ

The LO amplifier consists of common-emitter amplifiers Q1 and Q2. CR1 and CR2 provide limiting to prevent overdriving Q2 near 200 MHz where Q1 has more gain.

Mixer Ⓑ

The double-balanced mixer U1 operates with about +7 dBm LO drive and with -30 dBm RF signal input. The IF output is about -36 dBm and covers 30 MHz to 140 MHz. The 185 MHz Low-Pass Filter attenuates the harmonics of the RF signal input. The 10 dB pad reduces the RF signal input from -20 dBm to -30 dBm.

IF Input Amplifier Ⓒ

The IF input amplifier has an input filter to partially filter the RF and LO signals from the mixer. The amplifier Q3 has emitter degeneration R17 to reduce distortion.

140 MHz Low-Pass Filter Ⓓ

The 140 MHz Low-Pass Filter is a modified elliptic filter which must pass 140 MHz while rejecting 160 to 166 MHz by at least 60 dB. The three adjustable coils optimize the stopband by providing nulls at the frequencies shown on the schematic. This filter also rejects the LO frequencies (200 to 300 MHz).

IF Output Amplifier Ⓔ

The IF output amplifier consists of two common-emitter stages and an output low-pass filter. The two stages are coupled by Cl4 and L17 which provide high frequency peaking.

HP Part Number 85660-60024

A10A3 PLL 1 IF

Reference Designation	HP Part Number	C D	Qty	Description	Mfr Code	Mfr Part Number
A10A3	85660-60024	6	1	BOARD ASSEMBLY, PLL 1 IF	28480	85660-60024
A10A3C1	0160-3878	6	1	CAP-FXD 1000pF 100 V	04222	SR201C102MAAH
A10A3C2	0160-0574	3	1	CAPACITOR-FXD .022UF +-20% 100VDC CER	04222	SR201C223MAAH
A10A3C3	0160-3878	6	1	CAP-FXD 1000pF 100 V	04222	SR201C102MAAH
A10A3C4	0160-3878	6	1	CAP-FXD 1000pF 100 V	04222	SR201C102MAAH
A10A3C5	0160-0574	3	1	CAPACITOR-FXD .022UF +-20% 100VDC CER	04222	SR201C223MAAH
A10A3C6	0160-3878	6	1	CAP-FXD 1000pF 100 V	04222	SR201C102MAAH
A10A3C7	0160-3875	3	1	CAPACITOR-FXD 22PF +-5% 200VDC CER 0+-30		FD12C0G2D220J
A10A3C8	0160-3875	3	1	CAPACITOR-FXD 22PF +-5% 200VDC CER 0+-30		FD12C0G2D220J
A10A3C9	0160-3875	3	1	CAPACITOR-FXD 22PF +-5% 200VDC CER 0+-30		FD12C0G2D220J
A10A3C10	0160-0574	3	1	CAPACITOR-FXD .022UF +-20% 100VDC CER	04222	SR201C223MAAH
A10A3C11	0160-0574	3	1	CAPACITOR-FXD .022UF +-20% 100VDC CER	04222	SR201C223MAAH
A10A3C12	0160-0574	3	1	CAPACITOR-FXD .022UF +-20% 100VDC CER	04222	SR201C223MAAH
A10A3C13	0160-0574	3	1	CAPACITOR-FXD .022UF +-20% 100VDC CER	04222	SR201C223MAAH
A10A3C14	0160-3876	4	1	CAPACITOR-FXD 47PF +-20% 200VDC CER	04222	SR202C470MAAH
A10A3C15	0160-0574	3	1	CAPACITOR-FXD .022UF +-20% 100VDC CER	04222	SR201C223MAAH
A10A3C16	0160-3653	5	1	CAPACITOR-FXD 33PF +-5% 200VDC CER 0+-30		RPE110C0G330J200V
A10A3C17	0160-3878	6	1	CAP-FXD 1000pF 100 V	04222	SR201C102MAAH
A10A3C18	0160-3874	2	1	CAPACITOR-FXD 10PF +-.5PF 200VDC CER		FD12C0G2D100D
A10A3C19	0160-0574	3	1	CAPACITOR-FXD .022UF +-20% 100VDC CER	04222	SR201C223MAAH
A10A3C20	0160-0574	3	1	CAPACITOR-FXD .022UF +-20% 100VDC CER	04222	SR201C223MAAH
A10A3C21	0160-0574	3	1	CAPACITOR-FXD .022UF +-20% 100VDC CER	04222	SR201C223MAAH
A10A3C22	0160-0574	3	1	CAPACITOR-FXD .022UF +-20% 100VDC CER	04222	SR201C223MAAH
A10A3C23	0160-3874	2	1	CAPACITOR-FXO 10PF +-.5PF LOOVDC CER		FD12C0G2D100D
A10A3C24	0160-3875	3	1	CAPACITOR-FXD 22PF +-5% 200VDC CER 0+-30		FD12C0G2D220J
A10A3C25	0160-3565	8	1	CAP-FXD 6.8pF 100 V		FD11C0G2A6R8D
A10A3C26*	0160-3874	2	1	CAPACITOR-FXD 10PF +-.5PF 200VDC CER		FD12C0G2D100D
A10A3C27	0160-3565	8	1	CAP-FXD 6.8pF 100 V		FD11C0G2A6R8D
A10A3C28	0160-0574	3	1	CAPACITOR-FXD .022UF +-20% 100VDC CER	04222	SR201C223MAAH
A10A3C29	0160-3874	2	1	CAPACITOR-FXD 10PF +-.5PF 200VDC CER		FD12C0G2D100D
A10A3C30	0160-3565	8	1	CAP-FXD 6.8pF 100 V		FD11C0G2A6R8D
A10A3C31	0160-3873	1	1	CAPACITOR-FXD 4.7PF +-.5PF 200VDC CER		FD12C0G2D4R7D
A10A3C32	0160-4289	5	1	CAPACITOR-FXD 15PF +-5% 100VDC CER 0+-30		RPE110C0G150J100V
A10A3CR1	1901-0535	9	1	DIODE-SCHOTTKY SM SIG		
A10A3CR2	1901-0535	9	1	DIODE-SCHOTTKY SM SIG		
A10A3J3	1250-0690	6	1	CONNECTOR-RF SMB M SGL-HOLE-FR SO-OHM	98291	51-047-4610
A10A3L1	9100-2256	5	1	INDUCTOR RF-CH-MLD 560NH +-10% .105D-INX	24226	10M560K
A10A3L2	9100-2247	4	1	INDUCTOR RF-CH-MLD 100NH +-10% .105D-INX	24226	10M100K
A10A3L3	9100-2248	5	1	INDUCTOR RF-CH-MLD 120NH +-10% .105D-INX	24226	10M120K
A10A3L4	9100-2248	5	1	INDUCTOR RF-CH-MLD 120NH +-10% .105D-INX	24226	10M120K
A10A3L5	9100-2891	4	1	INDUCTOR RF-CH-MLD 50NH +-10% .105D-INX.	24226	10M050K-1
A10A3L6	9100-2247	4	1	INDUCTOR RF-CH-MLD 100NH +-10% .105D-INX	24226	10M100K
A10A3L7	9100-2247	4	1	INDUCTOR RF-CH-MLD 100NH +-10% .105D-INX	24226	10M100K
A10A3L8	9100-1788	6	1	CORE-FERRITE CHOKE-WIDEBANO IMP:680	02114	VK200 20/4B
A10A3L9	9100-1788	6	1	CORE-FERRITE CHOKE-WIDEBAND IMP:680	02114	VK200 20/4B
A10A3L10	9100-0368	6	1	INDUCTOR RF-CH-MLD 330NH +-10% .105D-INX	32159	1A-3303M +-10%
A10A3L11	85660-80006	6	1	INDUCTOR 120NH	28480	85660-80006

**Indicates factory-selected value*

HP Part Number 85660-60024

A10A3 PLL 1 IF

Reference Designation	HP Part Number	CD	Qty	Description	Mfr Code	Mfr Part Number
A10A3L12	85660-80009	C	1	INDUCTOR 100NH	28480	85660-80009
A10A3L13	85660-80006	f	1	INDUCTOR 120NH	28480	85660-80006
A10A3L14	9100-2251	C	1	INDUCTOR RF-CH-MLD 220NH +-10% .105D-INX	24226	10M220K
A10A3L15	9100-2247	4	1	INDUCTOR RF-CH-MLD 100NH +-10% .105D-INX	24226	10M100K
A10A3L16	9100-2247	4	1	INDUCTOR RF-CH-MLD 100NH +-10% .105D-INX	24226	10M100K
A10A3L17	9100-2248	F	1	INDUCTOR RF-CH-ML0 120NH +-10% .105D-INX	24226	10M120K
A10A3L18	9100-2256	F	1	INDUCTOR RF-CH-MLD 560NH +-10% .105D-INX	24226	10M560K
A10A3L19	9100-2256	5	1	INDUCTOR RF-CH-MLD 560NH +-10% .105D-INX	24226	10M560K
A10A3L20	9100-2891	4	1	INDUCTOR RF-CH-MLD 50NH +-10% .105D-INX.	24226	10M050K-1
A10A3L21	9100-2891	4	1	INDUCTOR RF-CH-MLD 50NH +-10% .105D-INX.	24226	10M050K-1
A10A3MP1				NOT ASSIGNED		
A10A3MP3	2190-0124	4	6	WASHER-LK INTL T NO. 10 .195-IN-ID	98291	3002-26
A10A3MP4	2200-0101	C	2	SCREW-MACH 4-40 .188-IN-LG PAN-HD-POZI	77250	
A10A3MP5	2950-0078	9	3	NUT-HEX-DBL-CHAM 10-32-THD .067-IN-THK	74163	500220
A10A3MP7	85660-00038	6	2	SHIELDING CAN	28480	85660-00038
A10A3MP8	85660-00040	C	1	SHIELDING CAN	28480	85660-00040
A10A3MP9	85660-20054	a	1	COVER, PC, PLL 1 IF	28480	85660-20054
A10A3MP10	85660-20068	4	3	GROUND LUG	28480	85660-20068
A10A3MP11	86701-40001	9	2	EXTRACTOR PC	28480	86701-40001
A10A3Q1	1854-0345	8	1	TRANSISTOR NPN 2N5179 SI TO-72 PD=200MW	04713	2N5179
A10A3Q2	1854-0378	7	1	TRANSISTOR NPN 2N5109 SI TO-39 PD=800MW	04713	2N5109
A10A3Q3	1854-0345	a	1	TRANSISTOR NPN 2N5179 SI TO-72 PD=200MW	04713	2N5179
A10A3Q4	1854-0345	8	1	TRANSISTOR NPN 2N5179 SI TO-72 PD=200MW	04713	2N5179
A10A3Q5	1854-0345	a	1	TRANSISTOR NPN 2N5179 SI TO-72 PD=200MW	04713	2N5179
A10A3R1	0757-0394	0	1	RESISTOR 51.1 +-1% .125W TF TC=O+-100	19701	SFR25H
A10A3R2	0698-3152	a	1	RESISTOR 3.48K 1% .125W TF TC=O+-100	19701	SFR25H
A10A3R3	0757-0421	4	1	RESISTOR 825 +-1% .125W TF TC=O+-100	19701	SFR25H
A10A3R4	0757-0401	0	1	RESISTOR 100 +-1% .125W TF TC=O+-100	19701	SFR25H
A10A3R5	0698-3429	2	1	RESISTOR 19.6 1% .125W TF TC=O+-100	19701	SFR25H
A10A3R6	0698-3438	3	1	RESISTOR 147 1% .125W TF TC=O+-100	19701	SFR25H
A10A3R7	0698-3446	3	1	RESISTOR 383 1% .125W TF TC=O+-100	19701	SFR25H
A10A3R8	0698-3440	7	1	RESISTOR 196 1% .125W TF TC=O+-100	19701	SFR25H
A10A3R9	0757-0394	0	1	RESISTOR 51.1 +-1% .125W TF TC=O+-100	19701	SFR25H
A10A3R10	0757-0401	0	1	RESISTOR 100 +-1% .125W TF TC=O+-100	19701	SFR25H
A10A3R11	0757-0397	3	1	RESISTOR 68.1 +-1% .125W TF TC=O+-100	19701	SFR25H
A10A3R12	0757-0401	0	1	RESISTOR 100 +-1% .125W TF TC=O+-100	19701	SFR25H
A10A3R13	0757-0428	1	1	RESISTOR 1.62K +-1% .125W TF TC=O+-100	19701	SFR25H
A10A3R14	0698-3152	8	1	RESISTOR 3.48K 1% .125W TF TC=O+-100	19701	SFR25H
A10A3R15	0757-0416	7	1	RESISTOR 511 +-1% .125W TF TC=O+-100	19701	SFR25H
A10A3R16	0698-3444	1	1	RESISTOR 316 1% .125W TF TC=O+-100	19701	SFR25H
A10A3R17	0757-0346	2	1	RESISTOR 10 +-1% .125W TF TC=O+-100	91637	CMF-55-1. T-l
A10A3R18	0698-3444	1	1	RESISTOR 316 1% .125W TF TC=O+-100	19701	SFR25H
A10A3R19	0757-0394	0	1	RESISTOR 51.1 +-1% .125W TF TC=O+-100	19701	SFR25H
A10A3R20	0698-3429	2	1	RESISTOR 19.6 1% .125W TF TC=O+-100	19701	SFR25H
A10A3R21	0757-0280	3	1	RESISTOR 1K +-1% .125W TF TC=O+-100	19701	SFR25H
A10A3R22	0757-0280	3	1	RESISTOR 1K +-1% .125W TF TC=O+-100	19701	SFR25H
A10A3R23	0757-0280	3	1	RESISTOR 1K +-1% .125W TF TC=O+-100	19701	SFR25H
A10A3R24	0698-3429	2	1	RESISTOR 19.6 1% .125W TF TC=O+-100	19701	SFR25H

**Indicates factory-selected value*

HP Part Number 85660-60024

A10A3 PLL 1 IF

Reference Designation	HP Part Number	C D	Qty	Description	Mfr Code	Mfr Part Number
A10A3R25	)757-0280	3	1	RESISTOR 1K +-1% .125W TF TC=O+-100	19701	SFR25H
A10A3R26	)757-0280	3	1	RESISTOR 1K +-1% .125W TF TC=O+-100	19701	SFR25H
A10A3R27	)698-3440	7	1	RESISTOR 196 1% .125W TF TC=O+-100	19701	SFR25H
A10A3U1	)955-0063	0	1	U-WAVE MIXER 500 MHZ MAX	15542	SRA-1-32
A10A3W1	35660-60092	8	1	CABLE ASSEMBLY, BLUE (INCLUDES J2)	28480	85660-60092
A10A3W2	35660-6009	7	1	CABLE ASSEMBLY, YELLOW (INCLUDES J1)	28480	85660-60091

**Indicates factory-selected value*

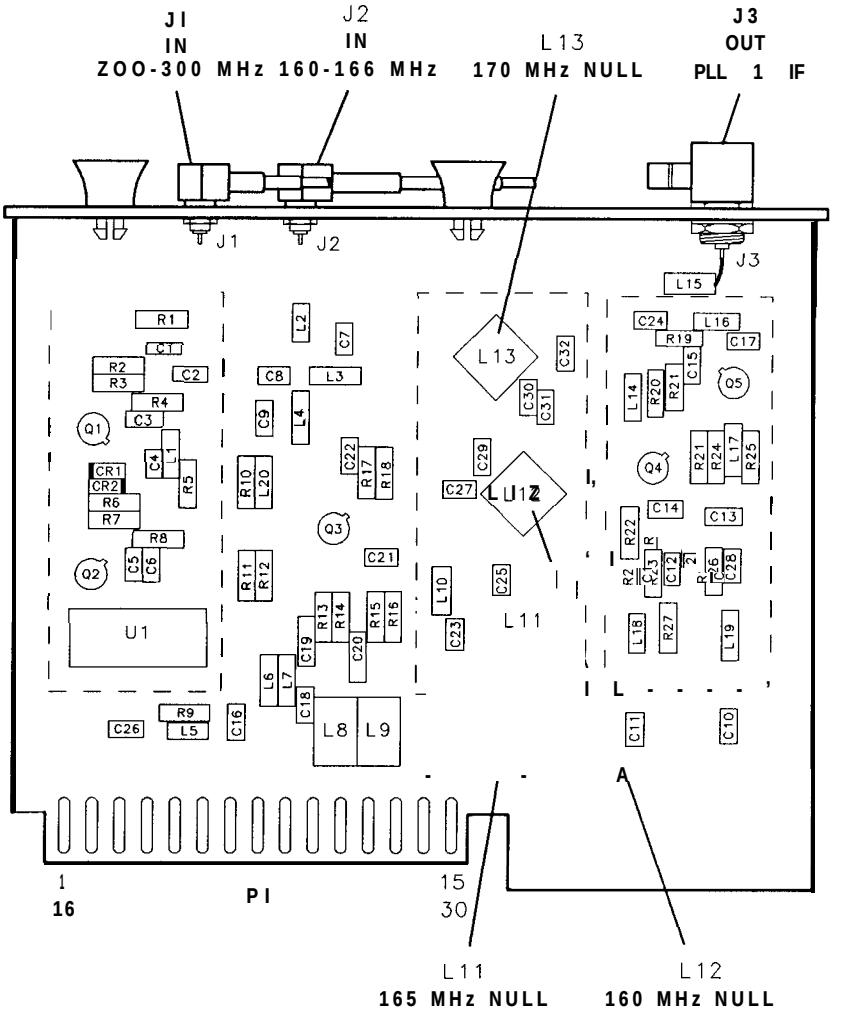

A10A3 PLL1 IF Component Locations, 85660-60024

A10A3 PHASE LOCK LOOP 1 (PLLI) IF
85660-60024
(SERIAL PREFIX:2410A)

P1

PIN	SIGNAL	TO/FROM	FUNCTION BLOCK
1	GND		F
16	GND		F
2	GND		F
17	GND		F
3	GND		F
18	GND		F
4	GND		F
19	GND		F
5	GND		F
20	GND		F
6	GND		F
21	GND		F
7	GND		F
22	GND		F
8	GND		F
23	GND		F
9	GND		F
24	GND		F
10	GND		F
25	GND		F
11	GND		F
26	GND		F
12	-10V		F
27	-10V		F
13	+20V		F
28	+20V		F
14	GND		F
29	GND		F
15	GND		F
30	GND		F

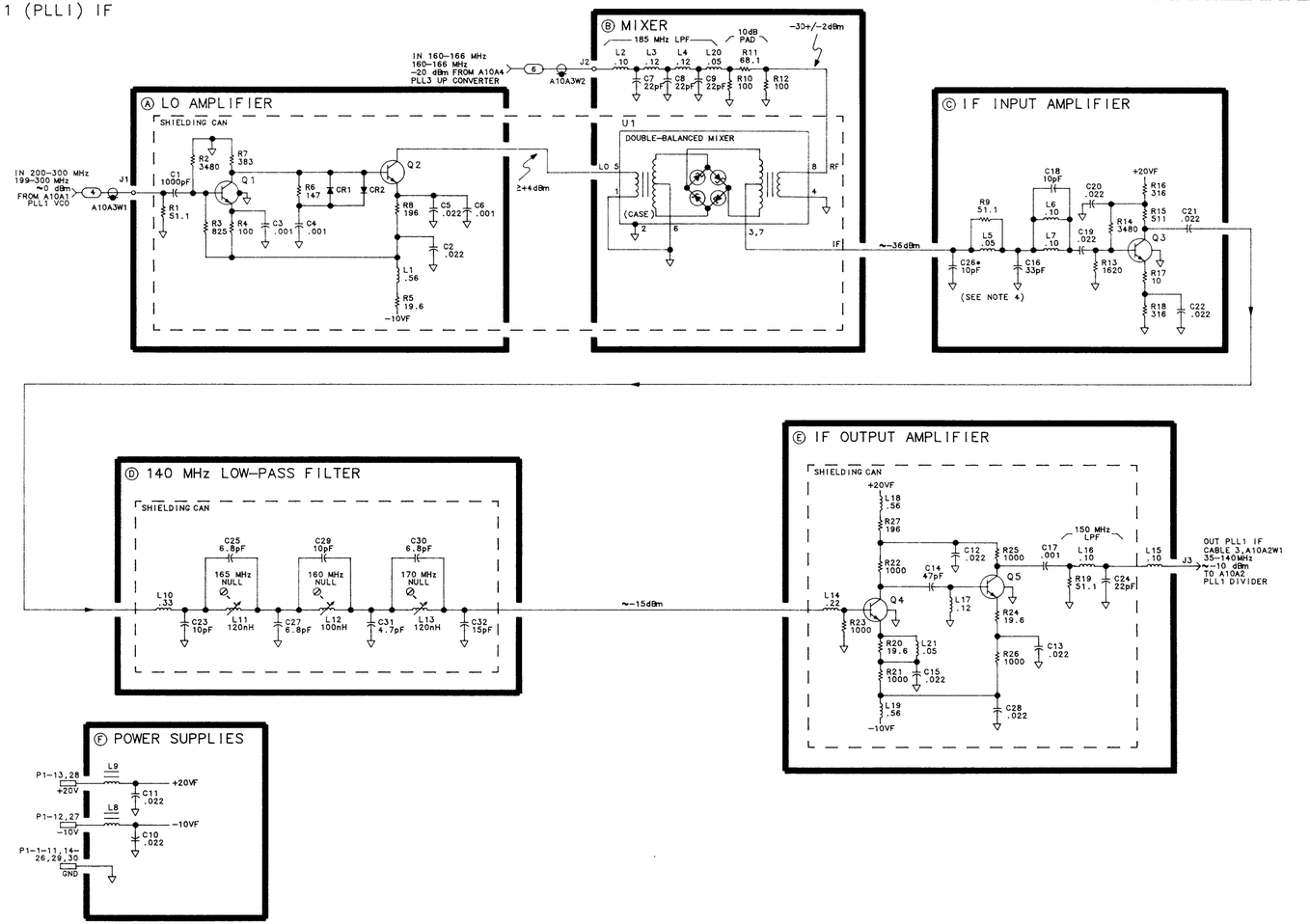

NOTES:

1. REFERENCE DESIGNATORS WITHIN THIS ASSEMBLY ARE ABBREVIATED. FOR COMPLETE REFERENCE DESIGNATION, PREFIX ABBREVIATION WITH ASSEMBLY DESIGNATION.
2. UNLESS OTHERWISE INDICATED: RESISTANCE IS IN OHMS (Ω) CAPACITANCE IS IN MICROFARADS (μF) INDUCTANCE IS IN MICROHENRIES (μH)
3. UNLESS OTHERWISE INDICATED: SIGNALS ENTER AT LEFT SIDE AND EXIT AT RIGHT SIDE OF FUNCTION BLOCKS.
4. C26* IS A FACTORY-SELECTED COMPONENT. ACCEPTABLE VALUES RANGE FROM 6.8pF TO 20pF.

A10A4

A10A4 Phase Lock Loop 3 (PLL3) Up Converter, Circuit Description

The function of A10A4 is to mix 160 MHz with the output of A10A5 (.15 to 6 MHz), up-converting that output by 160 MHz. The two frequencies are mixed together in a phase lock loop which has a closed loop bandwidth of approximately 10 kHz.

Frequency Multiplier × 1.6 Ⓐ

The frequency multiplier generates 160 MHz from the 100 MHz at the input. U3 divides the input by 5 and produces harmonics of the resulting 20 MHz. The 160 MHz bandpass filter selects 160 MHz, which is then amplified by Q5 and buffered with a pad to -20 dBm. All three adjustments are set by peaking the 160 MHz signal.

160 to 166 MHz VCO Ⓓ

The 160 to 166 MHz VCO uses Q1 in a Colpitts configuration. L11 centers the frequency range of the VCO while CR3 is the varactor which tunes the oscillator. Q2 and Q4 are buffer amplifiers.

Mixer Ⓑ

U7 is a double-balanced mixer which operates with about +7 dBm of LO power at 160 to 166 MHz and -20 dBm of RF signal power at 160 MHz. The desired output is the difference frequency which falls in the range between 150 kHz and 6 MHz.

IF Amplifier Ⓒ

The output of the mixer U7 is filtered by an 8-section elliptic filter which must reject 14 to 20 MHz, and other higher frequencies. The filter output is amplified by Q3.

Loop Amplifier Ⓕ

The phase detector outputs are connected to the differential inputs of U2. C9 and R16 provide ac feedback around U2 while dc feedback is provided by the entire phase lock loop. CR4 and CR5 lessen the charging time of C7 when the input frequency is changed abruptly. R14, R15, and C7 form an ac voltage divider which sets the loop bandwidth to about 10 kHz. The output of the divider goes to the varactor in the oscillator and tunes the VCO. U1B prevents this tune voltage from latching at a positive value by sensing when the voltage goes above 0 V. When this occurs, the output of U1B pulls the tune voltage down to the proper lock range. R13 provides hysteresis to allow time for the loop to lock.

Phase/Frequency Detector Ⓔ

U6B and U6C are ECL buffer amplifiers which have the proper output amplitude and dc level (approximately +3 V low and +4 V high) to drive the phase/frequency detector. When the phase detector inputs have the same phase, the outputs are ECL high with narrow negative coincident pulses. If there is a phase offset, the pulse widens on one of the outputs depending on which signal is leading in phase. When the input frequencies are different, the outputs consist of varying width pulses; the dc or average value of the outputs are different depending on which frequency is higher and by how much.

Phase Lock Indicator Ⓖ

The phase lock indicator senses the outputs of the phase detector which are ECL logic high when the loop is locked. When the loop is not locked, the average phase detector output level drops to half way between a logic low and logic high. U1A switches when this occurs and causes DS1 to go out and the phase lock output HUL1 to go to TTL high.

If PLL3 unlocks, LED DS1 will turn off, and the CRT message PL1 UNLOCK will appear. However, the CRT message PL1 UNLOCK will also appear if PLL1 unlocks, as indicated when A10A2DS1 turns off. In spans above n x 5 MHz and spans of n x 100 kHz and below, PLL3 functions to shift the output of PLL2 up in frequency by 160 MHz for further division by PLL1. The two loops PLL3 and PLL1 always operate in conjunction; if PLL3 unlocks, then the output of PLL1 is incorrect whether or not PLL1 unlocks. The single CRT message PL1 UNLOCK is used to indicate an unlock in either PLL1 or PLL3.

HP Part Number 85660-60025

Al OA4 PLL 3 Up Converter

Reference Designation	HP Part Number	CD	Qty	Description	Mfr Code	Mfr Part Number
A10A4	85660-60025	7	1	BOARD ASSEMBLY, PLL 3 UP CONVERTER	28480	85660-60025
A10A4C1	0160-0574	3	1	CAPACITOR-FXD .022UF +-20% 100VDC CER	04222	SR201C223MAAH
A10A4C2	0160-0572	1	1	CAPACITOR-FXD 2200PF +-20% 100VDC CER	04222	SR201C222MAAH
A10A4C3	0160-0572	1	1	CAPACITOR-FXD 2200PF +-20% 100VDC CER	04222	SR201C222MAAH
A10A4C4	0160-0574	3	1	CAPACITOR-FXD .022UF +-20% 100VDC CER	04222	SR201C223MAAH
A10A4C5	0160-4084	a	1	CAP-FXD 0.1uF 50 V	56289	1C20X7R104M050B
A10A4C6	0160-4084	a	1	CAP-FXD 0.1uF 50 V	56289	1C20X7R104M050B
A10A4C7	0180-0291	3	1	CAPACITOR-FXD 1UF+-10% 35VDC TA	56289	150D105X9035A2-DYS
A10A4C8	0160-0161	4	1	CAPACITOR-FXD .01UF +-10% EOOVDC POLYE	84411	HEW-238M
A10A4C9	0160-0161	4	1	CAPACITOR-FXD .01UF +-10% 200VDC POLYE	84411	HEW-238M
A10A4C10	0160-0574	3	1	CAPACITOR-FXD .022UF +-20% 100VDC CER	04222	SR201C223MAAH
A10A4C11	0160-0574	3	1	CAPACITOR-FXD .022UF +-20% 100VDC CER	04222	SR201C223MAAH
A10A4C12	0180-0228	6	1	CAPACITOR-FXD 22UF+-10% 15VDC TA	56289	150D226X9015B2-DYS
A10A4C13	0180-0291	3	1	CAPACITOR-FXD 1UF+-10% 35VDC TA	56289	150D105X9035A2-DYS
A10A4C14	0160-0574	3	1	CAPACITOR-FXD .022UF +-20% 100VDC CER	04222	SR201C223MAAH
A10A4C15	0160-0574	3	1	CAPACITOR-FXD .022UF +-20% 100VDC CER	04222	SR201C223MAAH
A10A4C16	0160-0574	3	1	CAPACITOR-FXD .022UF +-20% 100VDC CER	04222	SR201C223MAAH
A10A4C17	0160-4084	a	1	CAP-FXD 0.1uF 50 V	56289	1C20X7R104M050B
A10A4C18	0160-3749	0	1	CAPACITOR-FXD 330PF +-10% 50VDC CER		RPE110-401X7R331K50V
A10A4C19	0160-3877	5	1	CAPACITOR-FXD 100PF +-20% 200VDC CER	04222	SR202C101MAAH
A10A4C20	0160-3749	0	1	CAPACITOR-FXD 330PF +-10% 50VDC CER		RPE110-401X7R331K50V
A10A4C21	0180-0228	6	1	CAPACITOR-FXD 22UF+-10% 15VDC TA	56289	150D226X9015B2-DYS
A10A4C22	0160-3876	4	1	CAPACITOR-FXD 47PF +-20% 200VDC CER	04222	SR202C470MAAH
A10A4C23	0180-0228	6	1	CAPACITOR-FXD 22UF+-10% 15VDC TA	56289	150D226X9015B2-DYS
A10A4C24	0160-3877	5	1	CAPACITOR-FXD 100PF +-20% 200VDC CER	04222	SR202C101MAAH
A10A4C25	0160-0571	0	1	CAPACITOR-FXD 470PF +-20% 100VDC CER	04222	SR201C471MAAH
A10A4C26	0160-3877	5	1	CAPACITOR-FXD 100PF +-20% 200VDC CER	04222	SR202C101MAAH
A10A4C27	0160-0574	3	1	CAPACITOR-FXD .022UF +-20% 100VDC CER	04222	SR201C223MAAH
A10A4C28	0160-0571	0	1	CAPACITOR-FXD 470PF +-20% 100VDC CER	04222	SR201C471MAAH
A10A4C29	0160-3878	6	1	CAP-FXD 1000pF 100 V	04222	SR201C102MAAH
A10A4C30	0160-0574	3	1	CAPACITOR-FXD .022UF +-20% 100VDC CER	04222	SR201C223MAAH
A10A4C31	0160-0574	3	1	CAPACITOR-FXD .022UF +-20% 100VDC CER	04222	SR201C223MAAH
A10A4C32	0160-0574	3	1	CAPACITOR-FXD .022UF +-20% 100VDC CER	04222	SR201C223MAAH
A10A4C33	0160-3875	3	1	CAPACITOR-FXD 22PF +-5% EOOVDC CER 0+-30		FD12C0G2D220J
A10A4C34	0160-0574	3	1	CAPACITOR-FXD .022UF +-20% 100VDC CER	04222	SR201C223MAAH
A10A4C35	0160-3872	0	1	CAP-FXD 2.2pF 200 V		FD12C0G2D2R2C
A10A4C36	0160-3872	0	1	CAP-FXD 2.2pF 200 V		FD12C0G2D2R2C
A10A4C37	0160-3565	8	1	CAP-FXD 6.8pF 100 V		FD11C0G2A6R8D
A10A4C38	0160-0574	3	1	CAPACITOR-FXD .022UF +-20% 100VDC CER	04222	SR201C223MAAH
A10A4C39	0160-3874	2	1	CAPACITOR-FXD 10PF +-.5PF LOOVDC CER		FD12C0G2D100D
A10A4C40	0160-0574	3	1	CAPACITOR-FXD .022UF +-20% 100VDC CER	04222	SR201C223MAAH
A10A4C41	0160-0574	3	1	CAPACITOR-FXD .022UF +-20% 100VDC CER	04222	SR201C223MAAH
A10A4C42	0160-0574	3	1	CAPACITOR-FXD .022UF +-20% 100VDC CER	04222	SR201C223MAAH
A10A4C43	0160-3873	1	1	CAPACITOR-FXD 4.7PF +-.5PF 200VDC CER		FD12C0G2D4R7D
A10A4C44	0160-3875	3	1	CAPACITOR-FXD 22PF +-5% 200VDC CER 0+-30		FD12C0G2D220J
A10A4C45	0160-3874	2	1	CAPACITOR-FXD 10PF +-.5PF 200VDC CER		FD12C0G2D100D
A10A4C46	0160-3874	2	1	CAPACITOR-FXD 10PF +-.5PF EOOVDC CER		FD12C0G2D100D

**Indicates factory-selected value*

HP Part Number 85660-60025

A10A4 PLL 3 Up Converter

Reference Designation	HP Part Number	CD	Qty	Description	Mfr Code	Mfr Part Number
A10A4C47	0160-3873		1	CAPACITOR-FXD 4.7PF +-.5PF 200VDC CER		FD12C0G2D4R7D
A10A4C48	0160-3875		1	CAPACITOR-FXD 22PF +-5% 200VDC CER 0+-3C		FD12C0G2D220J
A10A4C49*	0160-4385	4	1	CAP-FXD 15pF 200 V		RPE121-105C0G150J200V
A10A4C50	0121-0452	4	1	CAPACITOR-V TRMR-AIR 1.3-5.4PF 175V	74970	187-0103-028
A10A4CR1	1901-0050		1	DIODE-SWITCHING 80V 200MA 2NS DO-35	9N171	1N4150
A10A4CR2	1901-0050	3	1	DIODE-SWITCHING 80V 200MA 2NS DO-35	9N171	1N4150
A10A4CR3	0122-0085	1	1	DIODE-VVC 2.2PF 7% C3/C25-MIN=4.5	so545	1S2208(B)
A10A4CR4	1901-0050	3	1	DIODE-SWITCHING 80V 200MA 2NS DO-35	9N171	1N4150
A10A4CR5	1901-0050	3	1	DIODE-SWITCHING 80V 200MA 2NS DO-35	9N171	1N4150
A10A4DS1	1990-0485	1	1	LED-LAMP LUM-INT=2MCD IF=30MA-MAX BVR=5V	28480	HLMP-1503
A10A4J2	1250-2112	1	1	CONNECTOR-RF SMB M SGL-HOLE-FR 50-OHM	98291	051-047-0259-220
A10A4J3	1250-2112	,	1	CONNECTOR-RF SMB M SGL-HOLE-FR 50-OHM	98291	051-047-0259-220
A10A4J4	1250-0257	1	1	CONNECTOR-RF SMB M PC 50-OHM	98291	51-051-0169-226
A10A4L1	9140-0179	1	1	INDUCTOR RF-CH-MLD 22UH +-10% .166D-INX.	99800	1537-44
A10A4L2	9140-0179	1	1	INDUCTOR RF-CH-MLD 22UH +-10% .166D-INX.	99800	1537-44
A10A4L3	9100-1788	6	1	CORE-FERRITE CHOKE-WIDEBAND IMP:680	02114	VK200 20/4B
A10A4L4	9100-1788	6	1	CORE-FERRITE CHOKE-WIDEBAND IMP:680	02114	VK200 20/4B
A10A4L5	9100-2258	7	1	INDUCTOR RF-CH-MLD 1.2UH +-10% .105D-INX	99800	1025-22
A10A4L6	9100-2258	7	1	INDUCTOR RF-CH-MLD 1.2UH +-10% .105D-INX	99800	1025-22
A10A4L7	9100-2258	7	1	INDUCTOR RF-CH-MLD 1.2UH +-10% .105D-INX	99800	1025-22
A10A4L8	9100-2257	6	1	INDUCTOR RF-CH-MLD 820NH +-10% .105D-INX	32159	1A 8203M +-10%
A10A4L9	9100-2254	3	1	INDUCTOR RF-CH-MLD 390NH +-10% .105D-INX	24226	10M390K
A10A4L10	9100-2258	7	1	INDUCTOR RF-CH-MLD 1.2UH +-10% .105D-INX	99800	1025-22
A10A4L11	85660-80006	6	1	INDUCTOR 120NH	28480	85660-80006
A10A4L12	9100-2255	4	1	INDUCTOR RF-CH-MLD 470NH +-10% .105D-INX	24226	10M470K
A10A4L13	9100-2258	7	1	INDUCTOR RF-CH-MLD 1.2UH +-10% .105D-INX	99800	1025-22
A10A4L14	9100-2258	7	1	INDUCTOR RF-CH-MLD 1.2UH +-10% .105D-INX	99800	1025-22
A10A4L15	9100-2891	4	1	INDUCTOR RF-CH-MLD 50NH +-10% .105D-INX.	24226	10M050K-1
A10A4L16	85660-80006	6	1	INDUCTOR 120NH	28480	85660-80006
A10A4L17	85660-80006	6	1	INDUCTOR 120NH	28480	85660-80006
A10A4L18	9135-0073	3	1	INDUCTOR RF-CH-MLD 51NH +-6.596% 2.6D-MM	06560	
A10A4L19	9100-2258	7	1	INDUCTOR RF-CH-MLD 1.2UH +-10% .105D-INX	99800	1025-22
A10A4L20	9100-2251	0	1	INDUCTOR RF-CH-MLD 220NH +-10% .105D-INX	24226	10M220K
A10A4L21	9140-0158	6	1	INDUCTOR RF-CH-MLD 1UH +-10% .105D-INX.2	32159	1A1002M +-10%
A10A4L22	9140-0144	0	1	INDUCTOR RF-CH-MLD 4.7UH +-10% .105D-INX	99800	1025-36
A10A4MP1				NOT ASSIGNED		
A10A4MP3	2190-0124	4	6	WASHER-LK INTL T ND. 10 .195-IN-ID	98291	3002-26
A10A4MP4	2200-0101	0	2	SCREW-MACH 4-40 .188-IN-LG PAN-HD-POZI	77250	
A10A4MP5	2950-0078	9	3	NUT-HEX-DBL-CHAM 10-32-THD .067-IN-THK	74163	500220
A10A4MP6	3050-0082	8	1	WASHER-FL NM NO. 4 .116-IN-ID .188-IN-OD	76854	8942-3
A10A4MP8	35660-00042		1	SHIELDING CAN	28480	85660-00042
A10A4MP9	35660-20055		1	COVER PC, PLL3 UP CONVERTER	28480	85660-20055
A10A4MP10	35660-20068		3	GROUND LUG	28480	85660-20068
A10A4MP11	86701-40001		1	IXTRACTOR PC	28480	86701-40001
A10A4Q1	1854-0345		1	TRANSISTOR NPN 2N5179 SI TO-72 PD=200MW	04713	2N5179
A10A4Q2	1854-0345		1	TRANSISTOR NPN 2N5179 SI TO-72 PD=200MW	04713	2N5179
A10A4Q3	1854-0345		1	TRANSISTOR NPN 2N5179 SI TO-72 PD=200MW	04713	2N5179
A10A4Q4	1854-0345		1	TRANSISTOR NPN 2N5179 SI TO-72 PD=200MW	04713	2N5179

**Indicates factory-selected value*

HP Part Number 85660-60025

A10A4 PLL 3 Up Converter

Reference Designation	HP Part Number	CD	Qty	Description	Mfr Code	Mfr Part Number
A10A4Q5	1855-0327	B	1	TRANSISTOR J-FET 2N4416 N-CHAN D-MODE	34677	
A10A4R1	0698-3440	7	1	RESISTOR 196 1% .125W TF TC=O+-100	19701	SFR25H
A10A4R2	0757-0394	0	1	RESISTOR 51.1 +-1% .125W TF TC=O+-100	19701	SFR25H
A10A4R3	0698-0083	8	1	RESISTOR 1.96K 1% .125W TF TC=O+-100	19701	SFR25H
A10A4R4	0757-0418	9	1	RESISTOR 619 +-1% .125W TF TC=D+-100	19701	SFR25H
A10A4R5	0757-0280	3	1	RESISTOR 1K +-1% .125W TF TC=O+-100	19701	SFR25H
A10A4R6	0757-0280	3	1	RESISTOR 1K +-1% .125W TF TC=O+-100	19701	SFR25H
A10A4R7	0698-3159	5	1	RESISTOR 26.1K 1% .125W TF TC=O+-100	19701	SFR25H
A10A4R8	0698-3159	5	1	RESISTOR 26.1K 1% .125W TF TC=O+-100	19701	SFR25H
A10A4R9	0757-0280	3	1	RESISTOR 1K +-1% .125W TF TC=O+-100	19701	SFR25H
A10A4R10	0757-0280	3	1	RESISTOR 1K +-1% .125W TF TC=O+-100	19701	SFR25H
A10A4R11	0757-0438	3	1	RESISTOR 5.11K +-1% .125W TF TC=O+-100	19701	SFR25H
A10A4R12	0757-0441	8	1	RESISTOR 8.251: +-1% .125W TF TC=O+-100	19701	SFR25H
A10A4R13	0757-0438	3	1	RESISTOR 5.11K +-1% .125W TF TC=O+-100	19701	SFR25H
A10A4R14	0698-3160	8	1	RESISTOR 31.6K 1% .125W TF TC=O+-100	19701	SFR25H
A10A4R15	0698-3447	4	1	RESISTOR 422 1% .125W TF TC=O+-100	19701	SFR25H
A10A4R16	0757-0441	8	1	RESISTOR 8.251: +-1% .125W TF TC=O+-100	19701	SFR25H
A10A4R17	0757-0441	8	1	RESISTOR 8.25K +-1% .125W TF TC=O+-100	19701	SFR25H
A10A4R18	0757-0438	3	1	RESISTOR 5.11K +-1% .125W TF TC=D+-100	19701	SFR25H
A10A4R19	0757-0346	2	1	RESISTOR 10 +-1% .125W TF TC=O+-100	91637	CMF-55-1, T-l
A10A4R20	0757-0346	2	1	RESISTOR 10 +-1% .125W TF TC=O+-100	91637	CMF-55-1, T-l
A10A4R21	0757-0346	2	1	RESISTOR 10 +-1% .125W TF TC=O+-100	91637	CMF-55-1, T-l
A10A4R22	0757-0421	4	1	RESISTOR 825 +-1% .125W TF TC=D+-100	19701	SFR25H
A10A4R23	0757-0466	7	1	RESISTOR 110K +-1% .125W TF TC=O+-100	19701	SFR25H
A10A4R24	0698-3156	2	1	RESISTOR 14.7K 1% .125W TF TC=O+-100	19701	SFR25H
A10A4R25	0698-0083	B	1	RESISTOR 1.96K 1% .125W TF TC=O+-100	19701	SFR25H
A10A4R26	0698-0083	B	1	RESISTOR 1.96K 1% .125W TF TC=O+-100	19701	SFR25H
A10A4R27	0698-3440	7	1	RESISTOR 196 1% .125W TF TC=O+-100	19701	SFR25H
A10A4R28	0757-0346	2	1	RESISTOR 10 +-1% .125W TF TC=D+-100	91637	CMF-55-1, T-l
A10A4R29*	0757-0397	3	1	RESISTOR 68.1 +-1% .125W TF TC=O+-100	19701	SFR25H
A10A4R30	0757-0280	3	1	RESISTOR 1K +-1% .125W TF TC=O+-100	19701	SFR25H
A10A4R31	0698-3156	2	1	RESISTOR 14.7K 1% .125W TF TC=O+-100	19701	SFR25H
A10A4R32	0698-7219	6	1	RESISTOR 196 +-1% .05W TF TC=0+-100	19701	50635
A10A4R33*	0757-0397	3	1	RESISTOR 68.1 +-1% .125W TF TC=O+-100	19701	SFR25H
A10A4R34	0698-3440	7	1	RESISTOR 196 1% .125W TF TC=O+-100	19701	SFR25H
A10A4R35	0757-0394	D	1	RESISTOR 51.1 +-1% .125W TF TC=O+-100	19701	SFR25H
A10A4R36	0757-0279	D	1	RESISTOR 3.16K +-1% .125W TF TC=0+-100	19701	SFR25H
A10A4R37	0757-1094	3	1	RESISTOR 1.47K +-1% .125W TF TC=O+-100	19701	SFR25H
A10A4R38	0698-7192	4	1	RESISTOR 14.7 +-1% .05W TF TC=O+-100	19701	50635
A10A4R39	0698-7230	1	1	RESISTOR 562 +-1% .05W TF TC=O+-100	19701	50635
A10A4R40	0698-7188	3	1	RESISTOR 10 +-1% .05W TF TC=O+-100	19701	5063J
A10A4R41	0698-7200	5	1	RESISTOR 31.6 +-1% .05W TF TC=0+-100	19701	50635
A10A4R42	0698-7236	7	1	RESISTOR 1K +-1% .05W TF TC=O+-100	19701	50635
A10A4R43	0698-7248	1	1	RESISTOR 3.16K +-1% .05W TF TC=O+-100	19701	50635
A10A4R44	0698-7236	7	1	RESISTOR 1K +-1% .05W TF TC=O+-100	19701	50635
A10A4R45	0698-7230	1	1	RESISTOR 562 +-1% .05W TF TC=O+-100	19701	50635
A10A4R46	3698-7218	5	1	RESISTOR 178 +-1% .05W TF TC=O+-100	19701	5063J

**Indicates factory-selected value*

HP Part Number 85660-60025

A10A4 PLL 3 Up Converter

Reference Designation	HP Part Number	C D	Qty	Description	Mfr Code	Mfr Part Number
A10A4R47	0698-7200	5	1	RESISTOR 31.6 +-1% .05W TF TC=O+-100	19701	50635
A10A4R48	0698-7218	5	1	RESISTOR 178 +-1% .05W TF TC=O+-100	19701	50635
A10A4R49	0698-7207	2	1	RESISTOR 61.9 +-1% .05W TF TC=O+-100	19701	50635
A10A4TP1	1251-0600	0	1	CONNECTOR-SGL CONT PIN 1.14-MM-BSC-SZ SQ	27264	16-06-0034
A10A4TP2	1251-0600	0	1	CONNECTOR-SGL CONT PIN 1.14-MM-BSC-SZ SQ	27264	16-06-0034
A10A4TP3	1251-0600	0	1	CONNECTOR-SGL CONT PIN 1.14-MM-BSC-SZ SQ	27264	16-06-0034
A10A4U1	5081-8117	3	1	SCREEN 1826-0092	28480	5081-8117
A10A4U2	1826-1058	3	1	IC OP AMP GP 8-TO-99 PKG	06665	OP-02CJ
A10A4U3	1820-1383	5	1	IC CNTR ECL BCD POS-EDGE-TRIG	04713	MC10138L
A10A4U4	1810-0205	7	1	NETWORK-RES 8-SIP 4.7K OHM X 7	11236	750-81
A10A4U5	1820-0817	8	1	IC FF ECL D-M/S DUAL	04713	MC10131P
A10A4U6	1820-0802	1	1	IC GATE ECL NOR QUAD 2-INP	04713	MC10102P
A10A4U7	1955-0063	0	1	U-WAVE MIXER 500 MHZ MAX	15542	SRA-1-32
A10A4W1	35660-60093	9	1	CABLE ASSEMBLY, VIOLET (INCLUDES J1)	28480	85660-60093

Indicates factory-selected value

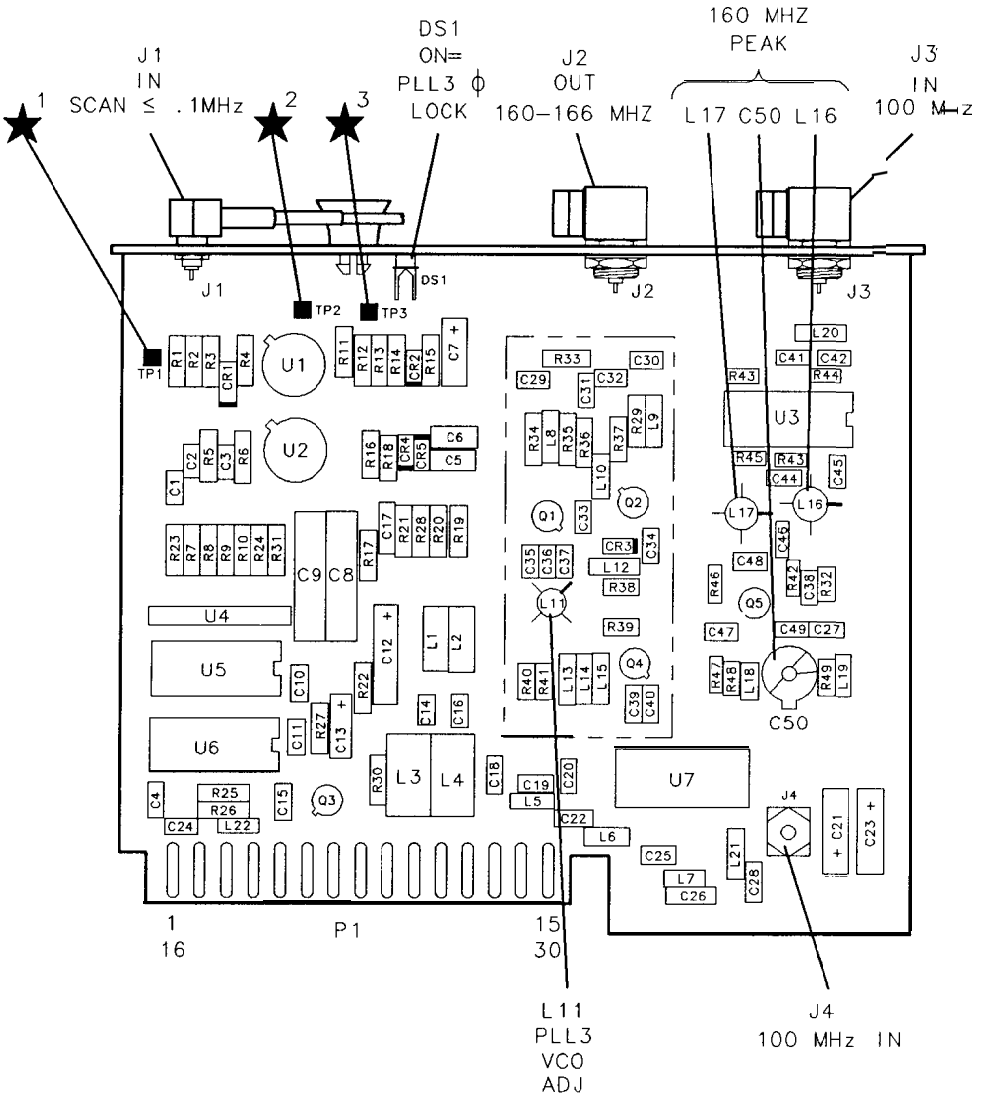

A10A4 PLL3 Up Converter Component Locations, 85660-60025

A10A4 PHASE LOCK LOOP 3 (PLL3) UP CONVERTER

85660-60025
(SERIAL PREFIX:2410A)

P1

PIN	SIGNAL	TO/FROM	FUNCTION BLOCK
1 16	HUL1 HUL1	A12 P3-13	G
2 17	GND GND		H
3 18	GND GND		H
4 19	GND GND		H
5 20	GND GND		H
6 21	GND GND		H
7 22	GND GND		H
8 23	GND GND		H
9 24	GND GND		H
10 25	GND GND		H
11 26	GND GND		H
12 27	-10V -10V		H
13 28	GND GND		H
14 29	GND GND		H
15 30	+5.2V +5.2V		H

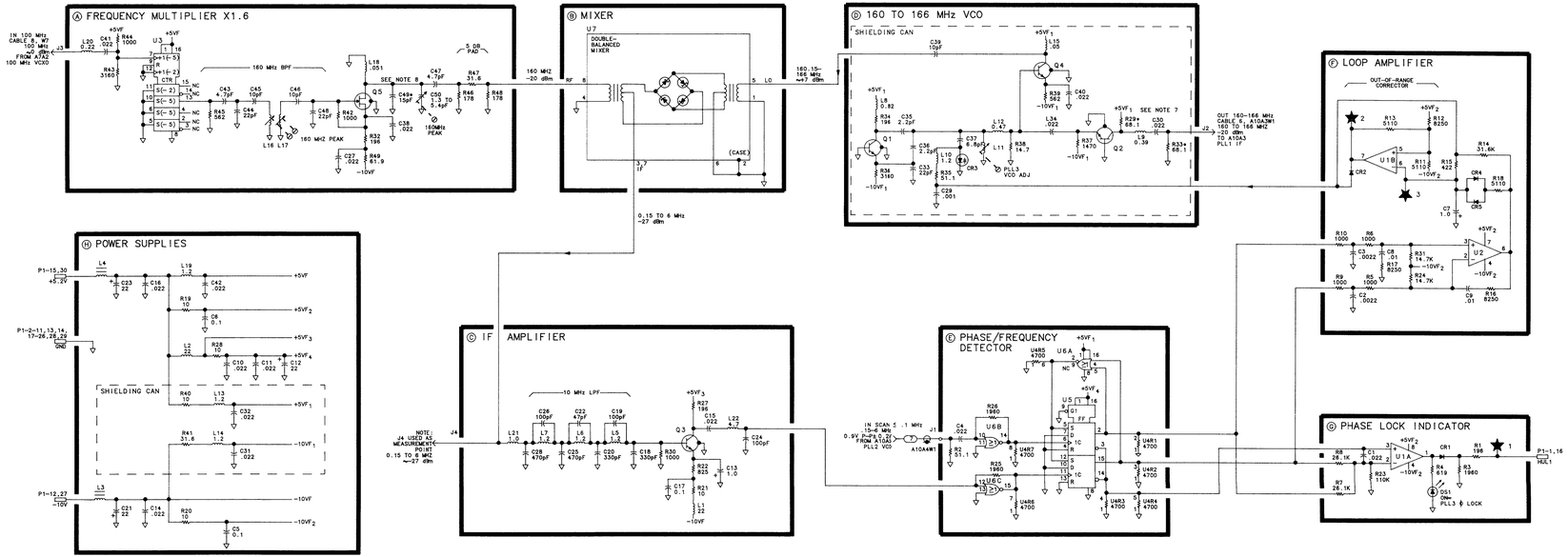

NOTES:

1. REFERENCE DESIGNATORS WITHIN THIS ASSEMBLY ARE ABBREVIATED. FOR COMPLETE REFERENCE DESIGNATION, PREFIX ABBREVIATION WITH ASSEMBLY DESIGNATION.
2. UNLESS OTHERWISE INDICATED: RESISTANCE IS IN OHMS, CAPACITANCE IS IN MICROMICROFARADS (pF) INDUCTANCE IS IN MICROHENRIES (μH)
3. UNLESS OTHERWISE INDICATED: SIGNALS ENTER AT LEFT SIDE AND EXIT AT RIGHT SIDE OF FUNCTION BLOCKS.
4. * INDICATES FACTORY SELECTED COMPONENT. TYPICAL VALUE IS SHOWN.
5. MNEMONICS TABLE

MNEMONIC	DESCRIPTION
HUL1	HIGH=PHASE LOCK LOOP 1 OR 3 UNLOCKED

6. U8D IS NOT USED.
7. R29* AND R33* ARE FACTORY-SELECTED COMPONENTS. THEY ARE USED TO SET THE GAIN OF FUNCTION BLOCK D (160 TO 166 MHz VCO). THE VALUE OF R29* AND R33* FOR EACH GAIN SETTING IS SHOWN BELOW. EACH NOMINAL VALUE AND ITS HP PART NUMBER IS ALSO LISTED.

GAIN	R29	R33
0.0dB	68.1	68.1
+0.7dB	68.1	75.0
+1.2dB	75.0	75.0
+2.0dB	68.1	82.5
+3.5dB	75.0	90.9

NOMINAL VALUE	HP PART NUMBER
68.1	0757-0397
75.0	0757-0398
82.5	0757-0399
90.9	0757-0400

8. C49* IS A FACTORY-SELECTED COMPONENT. THE FOLLOWING ALTERNATE VALUES AND HP PART NUMBERS MAY BE USED.

NOMINAL VALUE	HP PART NUMBER
10pF	0160-3874
11pF	0160-4520
12pF	0160-4521
13pF	0160-4522
15pF	0160-4385

A10A4

A10A5

A10A5 Phase Lock Loop 2 (PLL2) Voltage Controlled Oscillator (VCO), Circuit Description

75 to 150 MHz VCO Ⓑ

The VCO is a varactor tuned oscillator which tunes 75 to 150 MHz. Varactors CR1, CR2, CR3, and CR4 form a series-tuned resonant circuit with L4 and L5. This series circuit connects the emitters of Q1 and Q2. Q2 is a common-base amplifier whose load impedance is made up primarily of L9, R14, and R15. The voltage across the load is coupled to the base of emitter-follower Q1, which drives the series resonant circuit.

Bias Network/50 kHz Low-Pass Filter Ⓐ

Transistors Q5 and Q6 and associated components form a filtered -32 V source to bias the varactor tuning diodes. In the absence of tuning current, the varactor bias is set by R2 to approximately -17 V. Tuning current from the A10A8 PLL2 Discriminator passes through the 50 kHz low-pass filter and acts to pull this bias voltage in a positive direction. Tuning sensitivity is set by R4, to -10 Mhz/mA.

75 to 150 MHz Output Buffer Ⓒ

Q4 is a grounded-base amplifier to isolate the VCO from the load circuits. The output of Q4 is filtered, attenuated, and used to drive the A10A7 PLL2 Divider.

Frequency Dividers Ⓓ

Q3 isolates the VCO from the dividers and develops the required drive voltage. Note that all of the dividers and gates are ECL with V_{CC} hooked to +5 V and V_{EE} grounded. U3 divides the VCO frequency by 5; to the range of 15 to 30 MHz. U6C provides isolation. U2 divides the output by 5; to the range of 3 to 6 MHz. U2 then further divides by 2 and U1 divides the output by 10, to the range of is 0.15 to 0.30 MHz. The output of U1 is fed to the A10A8 PLL2 Discriminator.

Small Span Switch Ⓔ

U5 functions as a single-pole double-throw switch, controlled by SW2. For frequency spans greater than n x 5 kHz up to n x 100 kHz, SW2 is TTL high, routing the 3 to 6 MHz signal from U2 through U5C, U5B, and U5D to the A10A4 PLL3 Up Converter (n is the harmonic mixing number). When the frequency span is n x 5 kHz or less, or greater than n x 5 MHz, SW2 is low, routing the 0.15 to 0.30 MHz signal from U1 through U5A and U5D to the PLL3 Up Converter. R33 and R34 shift the TTL levels to ECL levels.

0.1 to 5 MHz Span Switch Ⓕ

For frequency spans of greater than n x 100 kHz up to n x 5 MHz, SW1 is TTL low, routing the 15 to 30 MHz signal from U3 through U6D, U7D, and T1 to the A10A1 PLL1 VCO. When SW1 is high, the circuit provides 90 dB of isolation. R35 and R36 shift the TTL levels to ECL levels.

HP Part Number 85660-60168

Al OA5 PLL 2 VCO

Reference Designatior	HP Part Number	C D	Qty	Description	Mfr Code	Mfr Part Number
A10A5	85660-60168		1	BOARD ASSEMBLY. PLL2 VCD	2848C	85660-60168
A10A5C1	0160-0300		1	CAPACITOR-FXD 2700PF +-10% 200VDC POLYE	84411	HEW-238M
A10A5C2	0160-0155		1	CAPACITOR-FXD 3300PF +-10% 200VDC PDLYE	84411	HEW-238M
A10A5C3	0160-0154		1	CAPACITOR-FXD 2200PF +-10% 200VDC POLYE	84411	HEW-238M
A10A5C4	0160-3879		1	CAPACITOR-FXD .01UF +-20% 100VDC CER	04222	SR201C103MAAH
A10A5C5	0160-4084		1	CAP-FXD 0.1uF 50 V	56289	1C20X7R104M050B
A10A5C6	0160-3879		1	CAPACITOR-FXD .01UF +-20% 100VDC CER	04222	SR201C103MAAH
A10A5C7	0160-3879		1	CAPACITOR-FXD .01UF +-20% 100VDC CER	04222	SR201C103MAAH
Al 0A5C8	0160-3878		1	CAP-FXD 1000pF 100 V	04222	SR201C102MAAH
A10A5C9	0160-4084		1	CAP-FXD 0.1uF 50 V	56289	1C20X7R104M050B
A10A5C10	0160-3878		1	CAP-FXD 1000pF 100 V	04222	SR201C102MAAH
A10A5C11	0160-3878		1	CAP-FXD 1000pF 100 V	04222	SR201C102MAAH
A10A5C12	0160-4525		1	CAPACITOR-FXD 29PF +-5% 200VDC CER 0+-30		FD12C0G2D290J
A10A5C13	0160-4524		1	CAPACITOR-FXD 24PF +-5% 200VDC CER 0+-30		FD12C0G2D240J
A10A5C14	0160-3879		1	CAPACITOR-FXD .01UF +-20% 100VDC CER	04222	SR201C103MAAH
A10A5C15	0160-3878		1	CAP-FXD 1000pF 100 V	04222	SR201C102MAAH
A10A5C16	0160-3878		1	CAP-FXD 1000pF 100 V	04222	SR201C102MAAH
A10A5C17	0160-3878		1	CAP-FXD 1000pF 100 V	04222	SR201C102MAAH
A10A5C18	0160-4084		1	CAP-FXD 0.1uF 50 V	56289	1C20X7R104M050B
A10A5C19	0160-4892		1	"AP-FXD 1uF 25 V	56289	2C37Z5U105M025C
A10A5C20	0160-4084		1	CAP-FXD 0.1uF 50 V	56289	1C20X7R104M050B
A10A5C21	0160-0571		1	CAPACITOR-FXD 470PF +-20% 100VDC CER	04222	SR201C471MAAH
A10A5C22	0160-4084		1	CAP-FXD 0.1uF 50 V	56289	1C20X7R104M050B
A10A5C23	0160-4084		1	CAP-FXD 0.1uF 50 V	56289	1C20X7R104M050B
A10A5C24	0160-4084		1	CAP-FXD 0.1uF 50 V	56289	1C20X7R104M050B
A10A5C25	0160-3877		1	CAPACITOR-FXD 100PF +-20% 200VDC CER	04222	SR202C101MAAH
A10A5C26	0160-4084		1	CAP-FXD 0.1uF 50 V	56289	1C20X7R104M050B
A10A5C27	0160-4084		1	CAP-FXD 0.1uF 50 V	56289	1C20X7R104M050B
A10A5C28	0160-4084		1	CAP-FXD 0.1uF 50 V	56289	1C20X7R104M050B
A10A5C29	0180-2141		1	CAPACITOR-FXD 3.3UF+-10% 50VDC TA	56289	150D335X9050B2-DYS
A10A5C30	0180-2141		1	CAPACITOR-FXD 3.3UF+-10% 50VDC TA	56289	150D335X9050B2-DYS
A10A5C31	0180-1715		1	CAPACITOR-FXD 150UF+-10% 6VDC TA	56289	150D157X9006R2-DYS
A10A5C32	0180-1746		1	CAPACITOR-FXD 15UF+-10% 20VDC TA	56289	150D156X9020B2-DYS
A10A5C33	0160-4084		1	CAP-FXD 0.1uF 50 V	56289	1C20X7R104M050B
A10A5C34	0180-0229		1	CAP-FXD 33uF 10 V TA	56289	150D336X9010B2-DYS
A10A5C35	0160-4084		1	CAP-FXD 0.1uF 50 V	56289	1C20X7R104M050B
A10A5C36	0180-1746		1	CAPACITOR-FXD 15UF+-10% 20VDC TA	56289	150D156X9020B2-DYS
A10A5C37	0160-4084		1	CAP-FXD 0.1uF 50 V	56289	1C20X7R104M050B
A10A5C38	0160-4084		1	CAP-FXD 0.1uF 50 V	56289	1C20X7R104M050B
A10A5CR1	3122-0085		1	DIODE-VVC 2.2PF 7% C3/C25-MIN=4.5	so545	1S2208(B)
A10A5CR2	3122-0085		1	DIODE-VVC 2.2PF 7% C3/C25-MIN=4.5	so545	1S2208(B)
A10A5CR3	0122-0085		1	DIODE-VVC 2.2PF 7% C3/C25-MIN=4.5	so545	132208(B)
A10A5CR4	0122-0085		1	IIDDE-VVC 2.2PF 7% C3/C25-MIN=4.5	so545	152208(B)
A10A5J2	1250-0544		1	:ONNECTOR-RF SM-SNP M SGL-HOLE-FR 50-OHM	98291	051-049-0000-220
A10A5J3	1250-0544		1	:ONNECTOR-RF SM-SNP M SGL-HOLE-FR 50-OHM	98291	051-049-0000-220
A10A5J4	1250-0544		1	:ONNECTOR-RF SM-SNP M SGL-HOLE-FR 50-OHM	98291	051-049-0000-220
A10A5J5	1250-0544		1	:ONNECTOR-RF SM-SNP M SGL-HOLE-FR 50-OHM	98291	051-049-0000-220

**Indicates factory-selected value*

HP Part Number 85660-60168

A10A5 PLL 2 VCO

Reference Designation	HP Part Number	CD	Qty	Description	Mfr Code	Mfr Part Number
A10A5L1	85660-80031	7	1	I NOUCTOR	28480	85660-80031
A10A5L2	85660-80031	7	1	INDUCTOR	28480	85660-80031
A10A5L3	9140-0144	0	1	INDUCTOR RF-CH-MLD 4.7UH +-10% .105D-	99800	1025-36
A10A5L4	9100-3358	a	1	INDUCTOR RF-CH-MLD 162NH +-5% .2D-	24226	15M160J-2
A10A5L5	9100-3358	0	1	INDUCTOR RF-CH-ML0 162NH +-5% .2D-	24226	15M160J-2
A10A5L6	9100-2251	0	1	INDUCTOR RF-CH-ML0 220NH +-10% .105D-	24226	10M220K
A10A5L7	9140-0158	6	1	INDUCTOR RF-CH-MLD 1UH +-10% .105D-	32159	1A1002M +-10%
A10A5L8	9100-2247	4	1	INDUCTOR RF-CH-MLD 100NH +-10% .105D-	24226	10M100K
A10A5L9	9100-2891	4	1	INDUCTOR RF-CH-MLD 50NH +-10% .105D-	24226	10M050K-1
A10A5L10	9100-2891	4	1	INDUCTOR RF-CH-MLD 50NH +-10% .105D-	24226	10M050K-1
A10A5L11	9140-0158	6	1	INDUCTOR RF-CH-MLD 1UH +-10% .105D-	32159	1A1002M +-10%
A10A5L12	9100-2247	4	1	INDUCTOR RF-CH-ML0 100NH +-10% .105D-	24226	10M100K
A10A5L13	9100-2258	7	1	INDUCTOR RF-CH-ML0 1.2UH +-10% .105D-	99800	1025-22
A10A5L14	9100-2250	9	1	INDUCTOR RF-CH-MLD 180NH +-10% .105D-	24226	10M180K
A10A5L15	9100-2247	4	1	INDUCTOR RF-CH-MLD 100NH +-10% .105D-	24226	10M100K
A10A5L16	9100-2247	4	1	INDUCTOR RF-CH-MLD 100NH +-10% .105D-	24226	10M100K
A10A5L17	9100-2247	4	1	INDUCTOR RF-CH-ML0 100NH +-10% .105D-	24226	10M100K
A10A5L18	9100-2247	4	1	INDUCTOR RF-CH-MLD 100NH +-10% .105D-	24226	10M100K
A10A5L19	9100-2247	4	1	INDUCTOR RF-CH-MLD 100NH +-10% .105D-	24226	10M100K
A10A5L20	9100-2247	4	1	INDUCTOR RF-CH-ML0 100NH +-10% .105D-	24226	10M100K
A10A5L21	9100-1618	1	1	INDUCTOR RF-CH-MLD 5.6UH +-10% .166D-	99800	1537-30
A10A5L22	9100-1618	1	1	INDUCTOR RF-CH-MLD 5.6UH +-10% .166D-	99800	1537-30
A10A5L23	9100-1618	1	1	INDUCTOR RF-CH-MLD 5.6UH +-10% .166D-	99800	1537-30
A10A5MP1				NOT ASSIGNED	28480	85660-20168
A10A5MP4	2200-0101	0	1	SCREW-MACH 4-40 .188-IN-LG PAN-HD-POZI	77250	
A10A5MP5	2950-0078	9	1	NUT-HEX-DBL-CHAM IO-32-THD .067-IN-THK	74163	500220
A10A5MP6	2190-0124	4	1	WASHER LOCK .195ID		
A10A5MP7	85660-20056	0	1	COVER PC, PLL2 VCO	28480	85660-20056
A10A5MP8	86701-40001	9	2	EXTRACTOR PC	28480	86701-40001
A10A5Q1	1854-0610	0	1	TRANSISTOR NPN SI TO-46 FT=800MHZ	04713	
A10A5Q2	1854-0610	0	1	TRANSISTOR NPN SI TO-46 FT=800MHZ	04713	
A10A5Q3	1854-0345	8	1	TRANSISTOR NPN 2N5179 SI TO-72 PD=200MW	04713	2N5179
A10A5Q4	1854-0345	8	1	TRANSISTOR NPN 2N5179 SI TO-72 PD=200MW	04713	2N5179
A10A5Q5	1853-0281	9	1	TRANSISTOR PNP 2N2907A SI TO-18 PD=400MW	04713	2N2907A
A10A5Q6	1853-0281	9	1	TRANSISTOR PNP 2N2907A SI TO-18 PD=400MW	04713	2N2907A
A10A5R1	0698-0085	0	1	RESISTOR 2.61K 1% .125W TF TC=O+-100	19701	SFR25H
A10A5R2	2100-3273	1	1	RESISTOR-TRMR 2K 10% TKF SIDE-ADJ l-TRN	32997	3386X-Y46-202
A10A5R3	0757-0428	1	1	RESISTOR 1.62K +-1% .125W TF TC=O+-100	19701	SFR25H
A10A5R4	2100-3273	1	1	RESISTOR-TRMR 2K 10% TKF SIDE-ADJ 1-TRN	32997	3386X-146-202
A10A5R5	0757-0447	4	1	RESISTOR 16.2K +-1% .125W TF TC=O+-100	19701	SFR25H
A10A5R6	0757-0401	0	1	RESISTOR 100 +-1% .125W TF TC=O+-100	19701	SFR25H
A10A5R7	0698-7205	0	1	RESISTOR 51.1 +-1% .05W TF TC=O+-100	19701	50635
A10A5R8	0698-7205	0	1	RESISTOR 51.1 +-1% .05W TF TC=O+-100	19701	50635
A10A5R9	0757-0346	2	1	RESISTOR 10 +-1% .125W TF TC=O+-100	91637	CMF-55-1, T-l
A10A5R10	0698-7228	7	1	RESISTOR 464 +-1% .05W TF TC=O+-100	19701	50635
A10A5R11	0698-7228	7	1	RESISTOR 464 +-1% .05W TF TC=O+-100	19701	50635
A10A5R12	0698-7188	8	1	RESISTOR 10 +-1% .05W TF TC=O+-100	19701	50635
A10A5R13	0757-0346	2	1	RESISTOR 10 +-1% .125W TF TC=O+-100	91637	CMF-55-1, T-l

**Indicates factory-selected value*

HP Part Number 85660-60168

A10A5 PLL 2 VCO

Reference Designation	HP Part Number	CD	Qty	Description	Mfr Code	Mfr Part Number
A10A5R14	0757-0398		1	RESISTOR 75 +-1% .125W TF TC=O+-100	19701	SFR25H
A10A5R15	0757-0398		1	RESISTOR 75 +-1% .125W TF TC=O+-100	19701	SFR25H
A10A5R16	0757-0418		1	RESISTOR 619 +-1% .125W TF TC=O+-100	19701	SFR25H
A10A5R17	0757-0346		1	RESISTOR 10 +-1% .125W TF TC=O+-100	91637	CMF-55-1, T-l
A10A5R18	0757-0419		1	RESISTOR 681 +-1% .125W TF TC=O+-100	19701	SFR25H
A10A5R19	0757-0346		1	RESISTOR 10 +-1% .125W TF TC=O+-100	91637	CMF-55-1, T-l
A10A5R20	0757-0400		1	RESISTOR 90.9 +-1% .125W TF TC=O+-100	19701	SFR25H
A10A5R21	0757-0398		1	RESISTOR 75 +-1% .125W TF TC=O+-100	19701	SFR25H
A10A5R22	0757-0398		1	RESISTOR 75 +-1% .125W TF TC=O+-100	19701	SFR25H
A10A5R23	0757-0401		1	RESISTOR 100 +-1% .125W TF TC=O+-100	19701	SFR25H
A10A5R24	0698-4037		1	RESISTOR 46.4 1% .125W TF TC=O+-100	19701	SFR25H
A10A5R25	0698-0083		1	RESISTOR 1.96K 1% .125W TF TC=O+-100	19701	SFR25H
A10A5R26	0757-0280		1	RESISTOR 1K +-1% .125W TF TC=O+-100	19701	SFR25H
A10A5R27	0698-3440		1	RESISTOR 196 1% .125W TF TC=O+-100	19701	SFR25H
A10A5R28	0757-0280		1	RESISTOR 1K +-1% .125W TF TC=O+-100	19701	SFR25H
A10A5R29	0757-0316		1	RESISTOR 42.2 +-1% .125W TF TC=O+-100	19701	SFR25H
A10A5R30	1757-0280		1	RESISTOR 1K +-1% .125W TF TC=O+-100	19701	SFR25H
A10A5R31	1757-0280		1	RESISTOR 1K +-1% .125W TF TC=O+-100	19701	SFR25H
A10A5R32	1698-3446		1	RESISTOR 383 1% .125W TF TC=O+-100	19701	SFR25H
A10A5R33	0698-3444		1	RESISTOR 316 1% .125W TF TC=O+-100	19701	SFR25H
A10A5R34	0757-0419		1	RESISTOR 681 +-1% .125W TF TC=O+-100	19701	SFR25H
A10A5R35	0698-3444		1	RESISTOR 316 1% .125W TF TC=O+-100	19701	SFR25H
A10A5R36	0757-0419		1	RESISTOR 681 +-1% .125W TF TC=O+-100	19701	SFR25H
A10A5R37	0757-0442		1	RESISTOR 10K +-1% .125W TF TC=O+-100	19701	SFR25H
A10A5R38	0757-0442		1	RESISTOR 10K +-1% .125W TF TC=O+-100	19701	SFR25H
A10A5R39	0757-0465		1	RESISTOR 100K +-1% .125W TF TC=O+-100	19701	SFR25H
A10A5R40	0757-0280		1	RESISTOR 1K +-1% .125W TF TC=O+-100	19701	SFR25H
A10A5R41	0757-0401		1	RESISTOR 100 +-1% .125W TF TC=O+-100	19701	SFR25H
A10A5R42	0757-0397		1	RESISTOR 68.1 +-1% .125W TF TC=O+-100	19701	SFR25H
A10A5R43	3698-3132		1	RESISTOR 261 1% .125W TF TC=O+-100	19701	SFR25H
A10A5R44	0757-0416		1	RESISTOR 511 +-1% .125W TF TC=O+-100	19701	SFR25H
A10A5T1	18553-6012		1	TRANSFORMER, RF BLUE	28480	08553-6012
A10A5TP1	1251-0600		1	CONNECTOR-SGL CONT PIN 1.14-MM-BSC-SZ SQ	27264	16-06-0034
A10A5U1	1820-1383		1	IC CNTR ECL BCD POS-EDGE-TRIG	04713	MC10138L
A10A5U2	1820-1383		1	IC CNTR ECL BCD POS-EDGE-TRIG	04713	MC10138L
A10A5U3	1820-2047		1	IC DIVR ECL QUINARY	52648	SP8620BDG
A10A5U4	.810-0205		1	NETWORK-RES 8-SIP 4.7K OHM X 7	11236	750-81
A10A5U5	.820-0802		1	IC GATE ECL NOR QUAD 2-INP	04713	MC10102P
A10A5U6	.820-0802		1	IC GATE ECL NOR QUAD 2-INP	04713	MC10102P
A10A5U7	.820-0802		1	IC GATE ECL NOR QUAD 2-INP	04713	MC10102P
A10A5W1	15660-60088		1	CABLE ASSEMBLY, GRAY/ORANGE (INCLUDES J1)	28480	85660-60088

**Indicates factory-selected value*

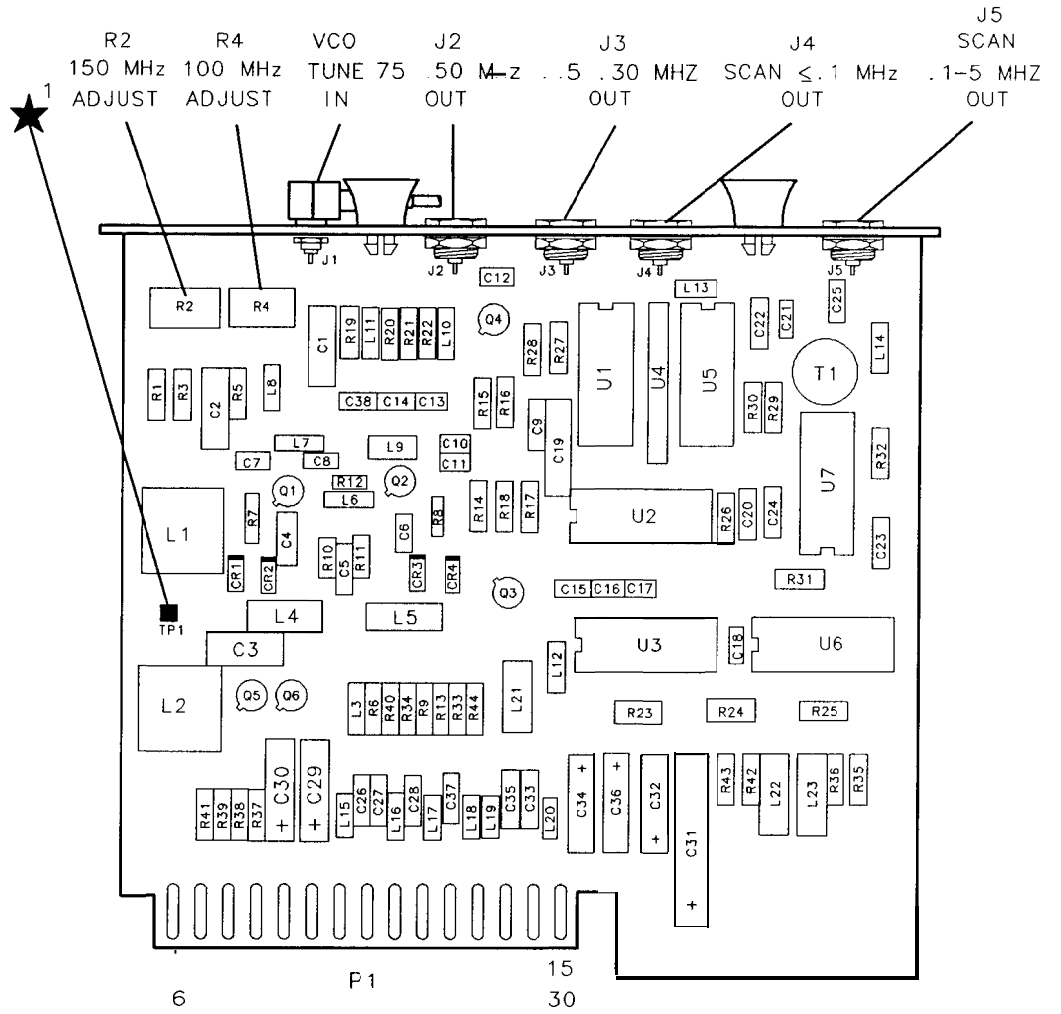

A10A5 PLL2 VCO Component Locations, 85660-6016≥

A10A5 PHASE LOCK LOOP 2 (PLL2)
VOLTAGE-CONTROLLED OSCILLATOR (VCO)
85660-60168
(SERIAL PREFIX: 2410A)

P1

PIN	SIGNAL	TO/FROM	FUNCTION BLOCK
1	NC		
16	NC		
2	GND		G
17	GND		NC
3	GND		G
18	NC		
4	GND		G
19	NC		
5	GND		G
20	NC		
6	GND		G
21	GND		NC
7	NC		
22	SW2	A10A7P1-14	E
8	NC		
23	NC		
9	NC		
24	SW1	A10A7P1-32	F
10	GND		G
25	GND		NC
11	-40V		A
26	-40V		A
12	-10V		G
27	-10V		G
13	+20V		G
28	+20V		G
14	GND		G
29	GND		NC
15	+5.2V		G
30	+5.2V		G

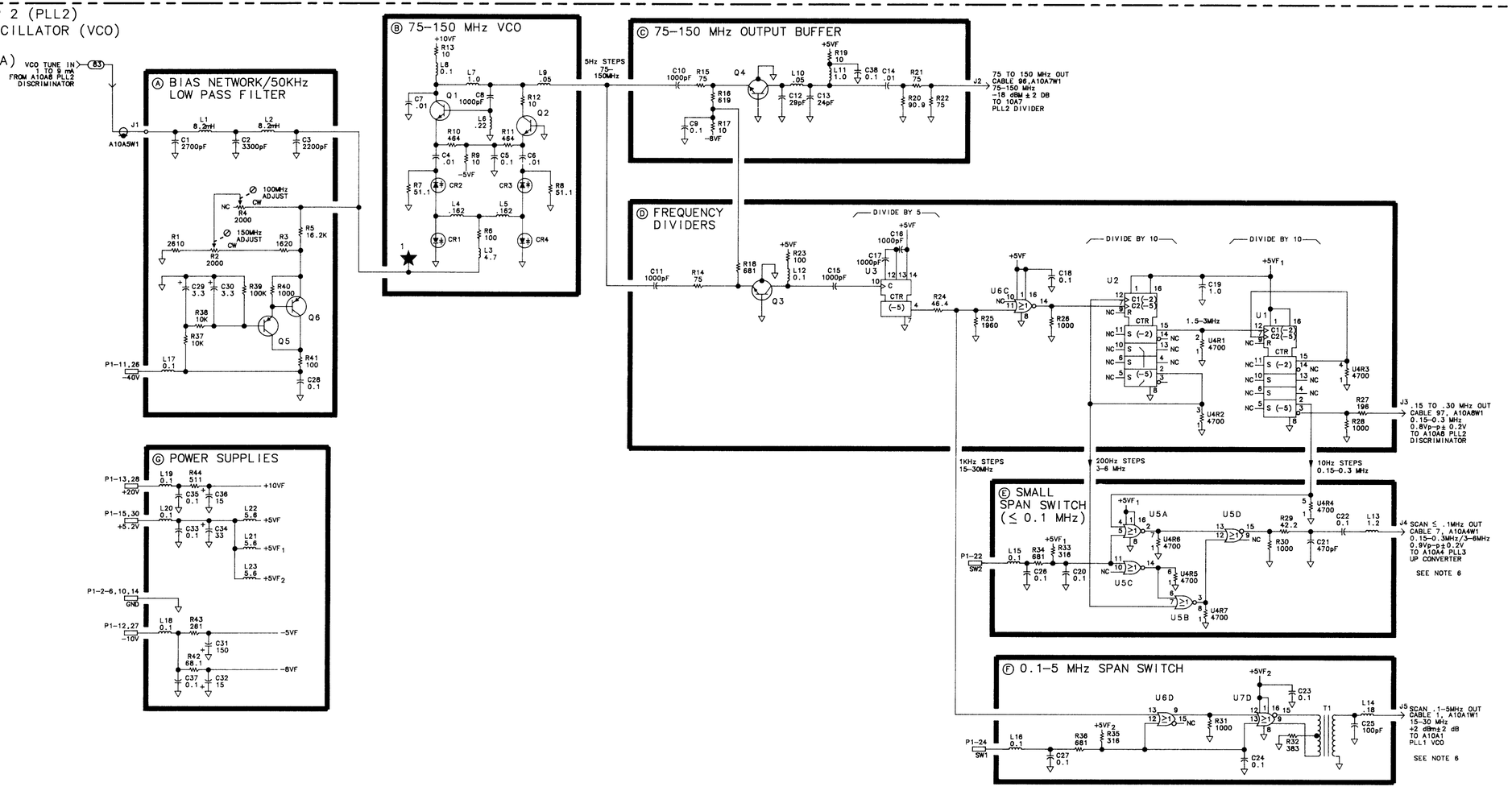

NOTES:

1. REFERENCE DESIGNATORS WITHIN THIS ASSEMBLY ARE ABBREVIATED. FOR COMPLETE REFERENCE DESIGNATION, PREFIX ABBREVIATION WITH ASSEMBLY DESIGNATION.
2. UNLESS OTHERWISE INDICATED: RESISTANCE IS IN OHMS (Ω). CAPACITANCE IS IN MICROFARADS (μF) INDUCTANCE IS IN MICROHENRIES (μH)
3. U6A,U6B,U7A,U7B AND U7C ARE NOT USED.
4. UNLESS OTHERWISE INDICATED: SIGNALS ENTER AT LEFT SIDE AND EXIT AT RIGHT SIDE OF FUNCTION BLOCKS.
5. MNEMONICS TABLE:

MNEMONIC	DESCRIPTION
SW1	SWITCH 1
SW2	SWITCH 2

6. J4 AND J5 OUTPUTS ARE TURNED ON ACCORDING TO THE FREQUENCY SPAN AND THE CENTER FREQUENCY SETTINGS SELECTED. 'n' IS THE HARMONIC MIXING NUMBER. FOR BANDS A AND B, n=1; BAND C, n=2; BAND D, n=3; AND BAND E, n=4:

FREQUENCY SPAN	J4	J5
0Hz TO n X 100kHz	ON	OFF
>n X 100kHz TO n X 5MHz	OFF	ON
>n X 5MHz	ON	OFF

A10A5

A10A5 PLL2 VCO, SCHEMATIC DIAGRAM

A10A6

A10A6 Phase Lock Loop 2 (PLL2) Phase Detector, Circuit Description

The purpose of the A10A6 PLL2 Phase Detector is to compare the output of the A10A5 PLL2 VCO (after division by the A10A7 PLL2 Divider) to the 500 kHz Reference from the A7A1 Reference Phase Detector. The phase difference is converted to an error voltage used to correct the PLL2 VCO frequency.

Phase-Frequency Detector Ⓐ

The phase-frequency detector responds to the phase difference between the 500 kHz reference input and the divided input from the A10A7 PLL2 Divider. Assuming both flip-flops U6A and U6B have been cleared, Q9 is on and Q10 is off. Q9 supplies about 3 mA current which is sunk by current source Q8 resulting in approximately zero current flow through the 50 kHz low-pass filter to U3. On A10A6 PLL2 Phase Detector, HP part number 85660-60276, transistor Q11 is added as an active pulldown to reduce glitches that could cause momentary false unlocks.

A pulse from the PLL2 Divider on Pl-19 clocks the Q output of U6A high, turning Q9 off. A subsequent reference pulse on Pl-20 clocks the Q output of U6B high, which will immediately reset both flip- flops through U7A. Thus the effect of a pulse at Pl-19 leading one at Pl-20 is to momentarily reduce the output current. Therefore, if the divided output leads the reference in phase, the current decreases. Similarly, if the reference phase leads, the current increases because Q10 is connected to the Q output of U6B.

If the two inputs have different frequencies, the pulse relationships become complicated, but the net effect is positive output current if the reference frequency is high.

U3 serves as an amplifier to provide the high currents necessary to rapidly charge the integrating capacitor C7 in the following stage. VR2 and VR3 serve as clamps, limiting the output swing to f5.8 V.

Unlock Indicator Ⓑ

When the phase lock loop is in a steady state condition, the voltage at TP1 is zero. If unlocked, the voltage will be non-zero except for transients passing through zero. When the voltage TP1 exceeds ±0.7 V, either Q1 or Q2 is turned on, discharging Cl5 or Cl4 respectively and tripping comparator U1. When TP1 voltage settles to less than f0.7 V, Cl4 and Cl5 must recharge before the comparator is reset. This takes 5 ms. The comparator output is TTL high for an unlock condition and remains there for 5 ms after a lock condition is established.

Analog Integrator-Sample and Hold ©

U2 and C7 form an integrator which integrates current flowing from U3 through R8. The output of the integrator is summed with other signals in U4 and ultimately controls the VCO frequency. In steady state conditions, TP3 will settle to a constant voltage which tunes the VCO to the correct frequency. If the voltage at TP3 is constant, the input current must be zero, so opening FET switch Q3 will not change the voltage at TP3. When PLL2 is being used in its swept mode, the loop is locked to a start frequency set by A10A7 PLL2 Divider, then Q3 is opened. This breaks the lock loop, permitting a sweep to be executed.

Q3 is closed with zero gate voltage, and open with -7 V gate voltage. The gate drive comes from Q6 and Q7, which translate the TTL level lock-sweep signal on Pl-2 to the 0/−7 V levels. Pl-2 is also connected to U6A and Q8, which results in zero voltage at TP1 during a sweep. A negative voltage may turn on Q3, changing the charge stored on C7.

Digital Integrator Ⓓ

The analog integrator does not have sufficient control range to correct initial warm-up drift and long term aging. If TP3 goes below -4.7 V, Q5 is turned on and its collector voltage is pulled down to -1.4 V. At this point, CR4 and CR3 become forward biased, clamping U2 and preventing further negative movement of TP3.

Simultaneously, the input of U7B will have been pulled low, which turns on a 2 kHz oscillator made up of U7C, R20, and C11. This clocks the count up input of counters U8 and U9, which drives DAC U10. U10 sources negative current to the summing junction of U4 and this current increases in magnitude as U8 and U9 count up. When the current reaches a value which tunes the VCO to the proper frequency, TP3 moves positive, shutting off the oscillator and returning control to the analog integrator. An analogous sequence occurs when TP3 tries to rise above +5.7 V.

Output Amplifier Ⓔ

U4 serves to sum signals from the analog integrator, DAC, and R11. R11 is a high frequency signal path shunting the integrators.

HP Part Number 85660-60130

A10A6 PLL 2 Phase Detector

Reference Designation	HP Part Number	CD	Qty	Description	Mfr Code	Mfr Part Number
A10A6	85660-60130	5	1	BOARD ASSEMBLY, PHASE LOCK LOOP 2 (PLL2) PHASE DETECTOR (SERIAL PREFIX: 2410A)	28480	85660-60130
A10A6C1	0180-0197	B	1	CAPACITOR-FXD 2.2UF+-10% 20VDC TA	56289	150D225X9020A2
A10A6C2	0160-0574	3	1	CAPACITOR-FXD .022UF +-20% 100VDC CER	28480	0160-0574
A10A6C3	0160-3879	7	1	CAPACITOR-FXD .01UF +-20% 100VDC CER	28480	0160-3879
A10A6C4	0160-4892	6	1	CAPACITOR-FXD 1UF +-20% 25VDC CER	28480	0160-4892
A10A6C5	0160-4892	6	1	CAPACITOR-FXD 1UF +-20% 25VDC CER	28480	0160-4892
A10A6C6	0160-2199	2	1	CAPACITOR-FXD 30PF +-5% 300VDC MICA	28480	0160-2199
A10A6C7	0160-5609	5	1	CAPACITOR-FXD 10UF +-10% 50VDC MET-POLYC	28480	0160-5609
A10A6C8	0160-4084	8	1	CAPACITOR-FXD .1UF +-10% 50VDC CER	28480	0160-4084
A10A6C9	0160-0573	2	1	CAPACITOR-FXD 4700PF +-20% 100VDC CER	28480	0160-0573
A10A6C10	0160-2199	2	1	CAPACITOR-FXD 30PF +-5% 300VDC MICA	28480	0160-2199
A10A6C11	0180-0291	3	1	CAPACITOR-FXD 1UF+-10% 35VDC TA	56289	150D105X9035A2
A10A6C12	0180-0291	3	1	CAPACITOR-FXD 1UF+-10% 35VDC TA	56289	150D105X9035A2
A10A6C13	0160-0575	4	1	CAPACITOR-FXD .047UF	28480	0160-0575
A10A6C14	0160-0575	4	1	CAPACITOR-FXD .047UF	28480	0160-0575
A10A6C15	0160-0575	4	1	CAPACITOR-FXD .047UF	28480	0160-0575
A10A6C16	0160-4084	8	1	CAPACITOR-FXD .1UF +-20% 50VDC CER	28480	0160-4084
A10A6C17	0180-0197	8	1	CAPACITOR-FXD 2.2UF+-10% 20VDC TA	56289	150D225X9020A2
A10A6C18	0160-4084	8	1	CAPACITOR-FXD .1UF +-20% 50VDC CER	28480	0160-4084
A10A6C19	0180-0291	3	1	CAPACITOR-FXD 1UF+-10% 35VOC TA	56289	150D105X9035A2
A10A6C20	0160-4084	8	1	CAPACITOR-FXD .1UF +-20% 50VDC CER	28480	0160-4084
A10A6C21	0180-0197	8	1	CAPACITOR-FXD 2.2UF+-10% EOVDC TA	56289	150D225X9020A2
A10A6C22	0180-0197	8	1	CAPACITOR-FXD 2.2UF+-10% EOVDC TA	56289	150D225X9020A2
A10A6C23	0160-2437	1	1	CAPACITOR-FDTHRU 5000PF +80 -20% 200V	28480	0160-2437
A10A6C24	0160-2437	1	1	CAPACITOR-FDTHRU 5000PF +80 -20% 200V	28480	0160-2437
A10A6CR1	1901-0033	2	1	DIODE-GEN PRP 180V 200MA DO-7	28480	1901-0033
A10A6CR2	1901-0376	6	1	DIODE-GEN PRP 35V 50MA DO-35	28480	1901-0376
A10A6CR3	1901-0376	6	1	DIODE-GEN PRP 35V 50MA DO-35	28480	1901-0376
A10A6CR4	1901-0033	2	1	DIODE-GEN PRP 180V 200MA DO-7	28480	1901-0033
A10A6L1	9100-1651	2	1	INDUCTOR RF-CH-MLD 750UH +-5% .2DX.45LG	28480	9100-1651
A10A6L2	9140-0144	0	1	INDUCTOR RF-CH-MLD 4.7UH 10% .105DX.26LG	28480	9140-0144
A10A6L3	9140-0144	0	1	INDUCTOR RF-CH-MLD 4.7UH 10% .105DX.26LG	28480	9140-0144
A10A6L4	9140-0144	0	1	INDUCTOR RF-CH-MLD 4.7UH 10% .105DX.26LG	28480	9140-0144
A10A6MP2	2190-0009	4	2	WASHER-LK INTL T NO. 8 .168-IN-ID	28480	2190-0009
A10A6MP3	2200-0101	0	2	SCREW-MACH 4-40 .188-IN-LG PAN-HO-POZI	00000	ORDER BY DESCRIPTION
A10A6MP4	2580-0002	4	2	NUT-HEX-DBL-CHAM 8-32-THD .085-IN-THK	28480	2580-0002
A10A6MP5	8150-0013	4	1	WIRE, 22 AWG 1x22	92194	298
A10A6MP6	85660-20057	1	1	CVR PC 2 PHSDETC	28480	85660-20057
A10A6MP7	86701-40001	9	2	EXTRACTOR PC	28480	86701-40001
A10A6Q1	1853-0281	9	1	TRANSISTOR PNP 2N2907A SI TO-18 PD=400MW	04713	2N2907A
A10A6Q2	1854-0477	7	1	TRANSISTOR NPN 2N2222A SI TO-18 PD=500MW	04713	2N2222A
A10A6Q3	1855-0386	9	1	TRANSISTOR J-FET 2N4392 N-CHAN D-MODE TO	04713	2N4392
A10A6Q4	1853-0322	9	1	TRANSISTOR PNP 2N2946A SI TO-46 PD=400MW	01275	2N2946A
A10A6Q5	1854-0557	4	1	TRANSISTOR NPN 2N2432A SI TO-18 PD=300MW	01295	2N2432A
A10A6Q6	1854-0404	0	1	TRANSISTOR NPN SI TO-18 PD=360MW	28480	1854-0404
A10A6Q7	1853-0281	9	1	TRANSISTOR PNP 2N2907A SI TO-18 PD=400MW	04713	2N2907A

**Indicates factory-selected value*

HP Part Number 85660-60130

A10A6 PLL 2 Phase Detector

Reference Designation	HP Part Number	CD	Qty	Description	Mfr Code	Mfr Part Number
A10A6Q8	1854-0404	0	1	TRANSISTOR NPN SI TO-18 PD=360MW	2848(	1854-0404
A10A6Q9	1853-0007	7	1	TRANSISTOR PNP 2N3251 SI TO-18 PD=360MW	0471:	2N3251
A10A6Q10	1853-0007	7	1	TRANSISTOR PNP 2N3251 SI TO-18 PD=360MW	0471:	2N3251
A10A6R1	0757-0280	3	1	RESISTOR 1K +-1% .125W TF TC=O+-100	19701	SFR25H
A10A6R2	0757-0317	7	1	RESISTOR 1.33K +-1% .125W TF TC=O+-100	19701	SFR25H
A10A6R3	0757-0280	3	1	RESISTOR 1K +-1% .125W TF TC=O+-100	19701	SFR25H
A10A6R4	0757-0317	7	1	RESISTOR 1.33K +-1% .125W TF TC=O+-100	19701	SFR25H
A10A6R5	0698-0083	8	1	RESISTOR 1.96K 1% .125W TF TC=O+-100	19701	SFR25H
A10A6R6	0698-3440	7	1	RESISTOR 196 1% .125W TF TC=O+-100	19701	SFR25H
A10A6R7	(0757-0123	3	1	RESISTOR 34.81: +-1% .125W TF TC=O+-100	19701	SFR25H
A10A6R8	0698-0082	7	1	RESISTOR 464 1% .125W TF TC=O+-100	19701	SFR25H
A10A6R9	0757-0442	9	1	RESISTOR 10K +-1% .125W TF TC=O+-100	19701	SFR25H
A10A6R10	0698-3260	9	1	RESISTOR 464K 1% .125W TF TC=O+-100	19701	SFR25H
A10A6R11	(3757-0290	5	1	RESISTOR 6.19K +-1% .125W TF TC=O+-100	19701	SFR25H
A10A6R12	0757-0420	3	1	RESISTOR 750 +-1% .125W TF TC=O+-100	19701	SFR25H
A10A6R13	(1698-0084	9	1	RESISTOR 2.15K 1% .125W TF TC=O+-100	19701	SFR25H
A10A6R14	0757-0280	3	1	RESISTOR 1K +-1% .125W TF TC=O+-100	19701	SFR25H
A10A6R15	0757-0442	9	1	RESISTOR 10K +-1% .125W TF TC=O+-100	19701	SFR25H
A10A6R16	(1757-0439	4	1	RESISTOR 6.81K +-1% .125W TF TC=O+-100	19701	SFR25H
A10A6R17	(1757-0444	1	1	RESISTOR 12.1K +-1% .125W TF TC=O+-100	19701	SFR25H
A10A6R18	0698-0084	9	1	RESISTOR 2.15K 1% .125W TF TC=O+-100	19701	SFR25H
A10A6R19	0757-0280	3	1	RESISTOR 1K +-1% .125W TF TC=O+-100	19701	SFR25H
A10A6R20	0698-3445	2	1	RESISTOR 348 1% .125W TF TC=O+-100	19701	SFR25H
A10A6R21	0698-3445	2	1	RESISTOR 348 1% .125W TF TC=O+-100	19701	SFR25H
A10A6R22	0757-0280	3	1	RESISTOR 1K +-1% .125W TF TC=O+-100	19701	SFR25H
A10A6R23	0757-0279	0	1	RESISTOR 3.16K +-1% .125W TF TC=O+-100	19701	SFR25H
A10A6R24	0698-3450	9	1	RESISTOR 42.2K 1% .125W F TC=O+-100	24546	C4-1/8-TO-4222-F
A10A6R25	(1757-0462	3	1	RESISTOR 75K +-1% .125W TF TC=O+-100	19701	SFR25H
A10A6R26	(1757-0467	8	1	RESISTOR 121K +-1% .125W TF TC=O+-100	19701	SFR25H
A10A6R27	0698-3266	5	1	RESISTOR 237K 1% .125W TF TC=O+-100	19701	SFR25H
A10A6R28	C1698-3460	1	1	RESISTOR 422K 1% .125W TF TC=O+-100	19701	SFR25H
A10A6R29	0757-0438	3	1	7ESISTOR 5.11K +-1% .125W TF TC=O+-100	19701	SFR25H
A10A6R30	C1698-0084	9	1	RESISTOR 2.15K 1% .125W TF TC=O+-100	19701	SFR25H
A10A6R31	0698-3154	0	1	7ESISTOR 4.22K 1% .125W TF TC=O+-100	19701	SFR25H
A10A6R32	C1757-0438	3	1	RESISTOR 5.11K +-1% .125W TF TC=O+-100	19701	SFR25H
A10A6R33	C1698-0085	0	1	RESISTOR 2.61K 1% .125W TF TC=O+-100	19701	SFR25H
A10A6R34	01698-3445	2	1	RESISTOR 348 1% .125W TF TC=O+-100	19701	SFR25H
A10A6R35	0757-0346	2	1	RESISTOR 10 +-1% .125W TF TC=O+-100	91637	CMF-55-1, T-l
A10A6R36	0757-0440	7	1	RESISTOR 7.5K 1% .125W TF TC=O+-100	24546	C4-1/8-TO-7501-F
A10A6TP1	1251-0600	0	1	CONNECTOR-SGL CONT PIN 1.14-MM-BSC-SZ SQ	27264	16-06-0034
A10A6TP2	1251-0600	0	1	CONNECTOR-SGL CONT PIN 1.14-MM-BSC-SZ SQ	27264	16-06-0034
A10A6TP3	1251-0600	0	1	CONNECTOR-SGL CONT PIN 1.14-MM-BSC-SZ SQ	27264	16-06-0034
A10A6TP4	1251-0600	0	1	CONNECTOR-SGL CONT PIN 1.14-MM-BSC-SZ SQ	27264	16-06-0034
A10A6TP5	1251-0600	0	1	CONNECTOR-SGL CONT PIN 1.14-MM-BSC-SZ SQ	27264	16-06-0034
A10A6U1	1826-0026	3	1	IC COMPARATOR PRCN TO-99 PKG	27014	LM311H
A10A6U2	1826-0459	6	1	IC OP AMP 14-DIP-C PKG	27014	LH0042CD
A10A6U3	1826-0059	2	1	:C OP AMP GP TO-99 PKG	27014	LM201AH
A10A6U4	L826-0059	2	1	IC OP AMP GP TO-99 PKG	27014	LM201AH

**Indicates factory-selected value*

HP Part Number 85660-60130

A10A6 PLL 2 Phase Detector

Reference Designation	HP Part Number	C D	Qty	Description	Mfr Code	Mfr Part Number
A10A6U5	1820-0429	8	1	IC V RGLTR-FXD-POS 4.8/5.2V TO-39 PKG	27014	LM309H
A10A6U6	1820-1212	9	1	IC FF TTL LS J-K NEG-EDGE-TRIG PRESET/CL	01295	SN74LS112AN
A10A6U7	1820-1425	6	1	IC SCHMITT-TRIG TTL LS NAND QUAD 2-INP	01295	SN74LS132N
A10A6U8	1820-1194	6	1	IC CNTR TTL LS BIN UP/DOWN SYNCHRO POS-E	01295	SN74LS193N
A10A6U9	1820-1194	6	1	IC CNTR TTL LS BIN UP/DOWN SYNCHRO POS-E	01295	SN74LS193N
A10A6U10	1826-0448	3	1	D/A 10-BIT 16-PLASTIC CMOS	24355	AD7533LN(SEL)
A10A6VR2	1902-0041	4	1	DIODE-ZNR 5.11V 5% DO-35 PD=.4W	04713	
A10A6VR3	1902-0041	4	1	DIODE-ZNR 5.11V 5% DO-35 PD=.4W	04713	
A10A6VR4	1902-3002	3	1	DIODE-ZNR 2.37V 5% DO-7 PD=.4W TC=-.074%	04713	

**Indicates factory-selected value*

HP Part Number 85660-60229

A10A6 PLL 2 Phase Detector

Reference Designatior	HP Part Number	C. D	Qty	Description	Mfr Code	Mfr Part Number
A10A6	85660-60229		1	BOARD ASSEMBLY, PHASE LOCK LOOP 2 (PLL2) PHASE DETECTOR (SERIAL PREFIXES: 2416A-2504A)	28480	85660-60229
A10A6C1	0180-0197	8	1	CAPACITOR-FXD 2.2UF+-10% 20VDC TA	56289	150D225X9020A2
A10A6C2	0160-0574	3	1	CAPACITOR-FXD .022UF +-20% 100VDC CER	28480	0160-0574
A10A6C3	0160-4832	4	1	CAPACITOR-FXO .01UF +-10% 100VDC CER	28480	0160-4832
A10A6C4	0160-4892	6	1	CAPACITOR-FXD 1UF +-20% 25VDC CER	28480	0160-4892
A10A6C5	0160-4892	6	1	CAPACITOR-FXD 1UF +-20% 25VDC CER	28480	0160-4892
A10A6C6	0160-2199	2	1	CAPACITOR-FXD 30PF +-5% 300VDC MICA	28480	0160-2199
A10A6C7	0160-5609	5	1	CAPACITOR-FXD 10UF +-10% 50VDC MET-POLYC	28480	0160-5609
A10A6C8	0160-4835	7	1	CAPACITOR-FXD .1UF +-10% 50VDC CER	28480	0160-4835
A10A6C9	0160-0573	2	1	CAPACITOR-FXD 4700PF +-20% 100VDC CER	28480	0160-0573
A10A6C10	0160-2199	2	1	CAPACITOR-FXD 30PF +-5% 300VDC MICA	28480	0160-2199
A10A6C11	0180-0291	3	1	CAPACITOR-FXD 1UF+-10% 35VDC TA	56289	150D105X9035A2
A10A6C12	0180-0291	3	1	CAPACITOR-FXD 1UF+-10% 35VDC TA	56289	150D105X9035A2
A10A6C13	0160-0575	4	1	CAPACITOR-FXD .047UF +-20% 50VDC CER	28480	0160-0575
A10A6C14	0160-0575	4	1	CAPACITOR-FXD .047UF +-20% 50VDC CER	28480	0160-0575
A10A6C15	0160-0575	4	1	CAPACITOR-FXD .047UF +-20% 50VDC CER	28480	0160-0575
A10A6C16	0160-4835	7	1	CAPACITOR-FXD .1UF +-10% 50VDC CER	28480	0160-4835
A10A6C17	3180-0197	8	1	CAPACITOR-FXD 2.2UF+-10% 20VDC TA	56289	150D225X9020A2
A10A6C18	0160-4835	7	1	CAPACITOR-FXD .1UF +-10% 50VOC CER	28480	0160-4835
A10A6C19	0180-0291	3	1	CAPACITOR-FXO 1UF+-10% 35VDC TA	56289	150D105X9035A2
A10A6C20	1160-4835	7	1	CAPACITOR-FXD .1UF +-10% 50VDC CER	28480	0160-4835
A10A6C21	1180-0197	B	1	CAPACITOR-FXD 2.2UF+-10% 20VDC TA	56289	150D225X9020A2
A10A6C22	1180-0197	8	1	CAPACITOR-FXD 2.2UF+-10% 20VDC TA	56289	150D225X9020A2
A10A6C23	1160-2437	1	1	CAPACITOR-FDTHRU 5000PF +BO -20% 200V	28480	0160-2437
A10A6C24	1160-2437	1	1	CAPACITOR-FDTHRU 5000PF +80 -20% 200V	28480	0160-2437
A10A6CR1	1901-0033	2	1	DIODE-GEN PRP 180V 200MA DO-7	28480	1901-0033
A10A6CR2	1901-0376	6	1	DIODE-GEN PRP 35V 50MA DO-35	28480	1901-0376
A10A6CR3	1901-0376	6	1	DIODE-GEN PRP 35V 50MA DO-35	28480	1901-0376
A10A6CR4	1901-0033	2	1	DIODE-GEN PRP 180V 200MA DO-7	28480	1901-0033
A10A6L1	9100-1651	2	1	INDUCTOR RF-CH-MLD 750UH +-5% .2DX.45LG	28480	9100-1651
A10A6L2	9140-0144	C	1	INDUCTOR RF-CH-MLD 4.7UH 10% .105DX.26LG	28480	9140-0144
A10A6L3	9140-0144	C	1	INDUCTOR RF-CH-MLD 4.7UH 10% .105DX.26LG	28480	9140-0144
A10A6L4	9140-0144	a	1	INDUCTOR RF-CH-MLD 4.7UH 10% .105DX.26LG	28480	9140-0144
A10A6MP2	2190-0009	4	2	WASHER-LK INTL T NO. 8 .168-IN-ID	28480	2190-0009
A10A6MP3	2200-0101	0	2	SCREW-MACH 4-40 .188-IN-LG PAN-HD-POZI	00000	ORDER BY DESCRIPTION
A10A6MP4	2580-0002	4	2	NUT-HEX-DBL-CHAM 8-32-THD .085-IN-THK	28480	2580-0002
A10A6MP5	3150-0013	4	1	WIRE, 22 AWG 1X22	92194	298
A10A6MP6	35660-20057	1	1	CVR PC 2 PHSDETC	28480	85660-20057
A10A6MP7	36701-40001	9	2	EXTRACTOR PC	28480	86701-40001
A10A6Q1	1853-0281	9	1	TRANSISTOR PNP 2N2907A SI TO-18 PD=400MW	04713	2N2907A
A10A6Q2	1854-0477	7	1	TRANSISTOR NPN 2N2222A SI TO-18 PD=500MW	04713	2N2222A
A10A6Q3	1855-0386	9	1	TRANSISTOR J-FET 2N4392 N-CHAN D-MODE TO	04713	214392
A10A6Q4	1853-0322	9	1	TRANSISTOR PNP 2N2946A SI TO-46 PD=400MW	01275	2N2946A
A10A6Q5	1854-0557	4	1	TRANSISTOR NPN 2N2432A SI TO-18 PD=300MW	01295	2N2432A
A10A6Q6	1854-0404	0	1	TRANSISTOR NPN SI TO-18 PD=360MW	28480	1854-0404
A10A6Q7	1853-0281	9	1	TRANSISTOR PNP 2N2907A SI TO-18 PD=400MW	04713	2N2907A

**Indicates factory-selected value*

HP Part Number 85660-60229

A10A6 PLL 2 Phase Detector

Reference Designation	HP Part Number	C. D	Qty	Description	Mfr Code	Mfr Part Number
A10A6Q8	1854-0404	C	1	TRANSISTOR NPN SI TO-18 PD=360MW	2848(	1854-0404
A10A6Q9	1853-0007	7	1	TRANSISTOR PNP 2N3251 SI TO-18 PD=360MW	0471:	2N3251
A10A6Q10	1853-0007	7	1	TRANSISTOR PNP 2N3251 SI TO-18 PD=360MW	04713	2N3251
A10A6R1	0757-0280	.	1	RESISTOR 1K +-1% .125W TF TC=O+-100	19701	SFR25H
A10A6R2	0757-0317	7	1	RESISTOR 1.33K +-1% .125W TF TC=O+-100	19701	SFR25H
A10A6R3	0757-0280	3	1	RESISTOR 1K +-1% .125W TF TC=O+-100	19701	SFR25H
A10A6R4	0757-0317	7	1	RESISTOR 1.33K +-1% .125W TF TC=O+-100	19701	SFR25H
A10A6R5	0698-0083	8	1	RESISTOR 1.96K 1% .125W TF TC=O+-100	19701	SFR25H
A10A6R6	0698-3440	7	1	RESISTOR 196 1% .125W TF TC=O+-100	19701	SFR25H
A10A6R7	0757-0123	3	1	RESISTOR 34.8K +-1% .125W TF TC=O+-100	19701	SFR25H
A10A6R8	0698-0082	7	1	RESISTOR 464 1% .125W TF TC=O+-100	19701	SFR25H
A10A6R9	0757-0442	9	1	RESISTOR 10K +-1% .125W TF TC=O+-100	19701	SFR25H
A10A6R10	0698-3260	9	1	RESISTOR 464K 1% .125W TF TC=O+-100	19701	SFR25H
A10A6R11	3757-0290	5	1	RESISTOR 6.19K +-1% .125W TF TC=O+-100	19701	SFR25H
A10A6R12	0757-0420	3	1	RESISTOR 750 +-1% .125W TF TC=O+-100	19701	SFR25H
A10A6R13	0698-0084	9	1	RESISTOR 2.15K 1% .125W TF TC=O+-100	19701	SFR25H
A10A6R14	0757-0280	3	1	RESISTOR 1K +-1% .125W TF TC=O+-100	19701	SFR25H
A10A6R15	1757-0442	9	1	RESISTOR 10K +-1% .125W TF TC=O+-100	19701	SFR25H
A10A6R16	1757-0439	4	1	RESISTOR 6.81K +-1% .125W TF TC=O+-100	19701	SFR25H
A10A6R17	0757-0444	1	1	RESISTOR 12.1K +-1% .125W TF TC=O+-100	19701	SFR25H
A10A6R18	1698-0084	9	1	RESISTOR 2.15K 1% .125W TF TC=O+-100	19701	SFR25H
A10A6R19	0757-0280	3	1	RESISTOR 1K +-1% .125W TF TC=O+-100	19701	SFR25H
A10A6R20	0698-3445	2	1	RESISTOR 348 1% .125W TF TC=O+-100	19701	SFR25H
A10A6R21	0698-3445	2	1	RESISTOR 348 1% .125W TF TC=O+-100	19701	SFR25H
A10A6R22	0757-0280	3	1	RESISTOR 1K +-1% .125W TF TC=O+-100	19701	SFR25H
A10A6R23	0757-0279	0	1	RESISTOR 3.16K +-1% .125W TF TC=O+-100	19701	SFR25H
A10A6R24	0698-3450	3	1	RESISTOR 42.2K 1% .125W F TC=O+-100	24546	C4-1/8-TO-4222-F
A10A6R25	0757-0462	3	1	RESISTOR 75K +-1% .125W TF TC=O+-100	19701	SFR25H
A10A6R26	1757-0467	3	1	RESISTOR 121K +-1% .125W TF TC=O+-100	19701	SFR25H
A10A6R27	1698-3266	5	1	RESISTOR 237K 1% .125W TF TC=O+-100	19701	SFR25H
A10A6R28	1698-3460	1	1	RESISTOR 422K 1% .125W TF TC=O+-100	19701	SFR25H
A10A6R29	1757-0438	3	1	RESISTOR 5.11K +-1% .125W TF TC=O+-100	19701	SFR25H
A10A6R30	1698-0084	9	1	RESISTOR 2.15K 1% .125W TF TC=O+-100	19701	SFR25H
A10A6R31	0698-3154	0	1	RESISTOR 4.22K 1% .125W TF TC=O+-100	19701	SFR25H
A10A6R32	3757-0438	3	1	RESISTOR 5.11K +-1% .125W TF TC=O+-100	19701	SFR25H
A10A6R33	0698-0085	0	1	RESISTOR 2.61K 1% .125W TF TC=O+-100	19701	SFR25H
A10A6R34	3698-3445	2	1	RESISTOR 348 1% .125W TF TC=O+-100	19701	SFR25H
A10A6R35	0757-0346	2	1	RESISTOR 10 +-1% .125W TF TC=O+-100	91637	CMF-55-1, T-l
A10A6R36	0757-0440	7	1	RESISTOR 7.5K 1% .125W TF TC=O+-100	24546	C4-1/8-TO-7501-F
A10A6TP1	1251-0600	0	1	CONNECTOR-SGL CONT PIN 1.14-MM-BSC-SZ SQ	27264	16-06-0034
A10A6TP2	1251-0600	0	1	CONNECTOR-SGL CONT PIN 1.14-MM-BSC-SZ SQ	27264	16-06-0034
A10A6TP3	1251-0600	0	1	CONNECTOR-SGL CONT PIN 1.14-MM-BSC-SZ SQ	27264	16-06-0034
A10A6TP4	1251-0600	0	1	CONNECTOR-SGL CONT PIN 1.14-MM-BSC-SZ SQ	27264	16-06-0034
A10A6TP5	1251-0600	0	1	CONNECTOR-SGL CONT PIN 1.14-MM-BSC-SZ SQ	27264	16-06-0034
A10A6U1	1826-0026	3	1	IC COMPARATOR PRCN TO-99 PKG	27014	LM311H
A10A6U2	1826-0459	6	1	IC OP AMP 14-DIP-C PKG	27014	LH0042CD
A10A6U3	1826-0059	2	1	IC OP AMP GP TO-99 PKG	27014	LM201AH

**Indicates factory-selected value*

HP Part Number 85660-60229

A10A6 PLL 2 Phase Detector

Reference Designation	HP Part Number	CD	Qty	Description	Mfr Code	Mfr Part Number
A10A6U4	1826-0059	2	1	IC OP AMP GP TO-99 PKG	27014	LM201AH
A10A6U5	1820-0429	8	1	IC V RGLTR-FXO-POS 4.8/5.2V TO-39 PKG	27014	LM309H
A10A6U6	1820-1212	9	1	IC FF TTL LS J-K NEG-EDGE-TRIG PRESET/CL	01295	SN74LS112AN
A10A6U7	1820-1425	6	1	IC SCHMITT-TRIG TTL LS NAND QUAD 2-INP	01295	SN74LS132N
A10A6U8	1820-1194	6	1	IC CNTR TTL LS BUR/DOWN SYNCHRO POS-E	01295	SN74LS193N
A10A6U9	1820-1194	6	1	IC CNTR TTL LS BUR/DOWN SYNCHRO POS-E	01295	SN74LS193N
A10A6U10	1826-0448	3	1	O/A 10-BIT 16-PLASTIC CMOS	24355	AD7533LN(SEL)
A10A6VR2	1902-0041	4	1	DIODE-ZNR 5.11V 5% DO-35 PD=.4W	04713	
A10A6VR3	1902-0041	4	1	DIODE-ZNR 5.11V 5% DO-35 PD=.4W	04713	
A10A6VR4	1902-3002	3	1	DIODE-ZNR 2.37V 5% DO-7 PD=.4W TC=-.074%	04713	

**Indicates factory-selected value*

HP Part Number 85660-60254

A10A6 PLL 2 Phase Detector

Reference Designation	HP Part Number	CD	Qty	Description	Mfr Code	Mfr Part Number
A10A6	85660-60254		1	BOARD ASSEMBLY, PHASE LOCK LOOP 2 (PLL2) PHASE DETECTOR (SERIAL PREFIXES: 2511A-2613A)	28480	85660-60254
A10A6C1	0180-0197		1	CAPACITOR-FXO 2.2UF+-10% 20VOC TA	56288	150D225X9020A2
A10A6C2	0160-0574		1	CAPACITOR-FXO .022UF +-20% 100VDC CER	2848C	0160-0574
A10A6C3	0160-4832		1	CAPACITOR-FXO .01UF +-10% 100VDC CER	2848C	0160-4832
A10A6C4	0160-4892		1	CAPACITOR-FXO 1UF +-20% 25VOC CER	2848C	0160-4892
A10A6C5	0160-4892		1	CAPACITOR-FXO 1UF +-20% 25VOC CER	28480	0160-4892
A10A6C6	0160-2199		1	CAPACITOR-FXO 30PF +-5% 300VOC MICA	28480	0160-2199
A10A6C7	0160-5609		1	CAPACITOR-FXO 10UF +-10% 50VOC MET-POLYC	28480	0160-5609
A10A6C8	C1160-4835		1	CAPACITOR-FXO .1UF +-10% 50VDC CER	28480	0160-4835
A10A6C9	a1160-0573		1	CAPACITOR-FXO 4700PF +-20% 100VDC CER	28480	0160-0573
A10A6C10	a1160-2199		1	CAPACITOR-FXO 30PF +-5% 300VOC MICA	28480	0160-2199
A10A6C11	0180-0291		1	CAPACITOR-FXO 1UF+-10% 35VOC TA	56289	150D105X9035A2
A10A6C12	0180-0291		1	CAPACITOR-FXO 1UF+-10% 35VOC TA	56289	150D105X9035A2
A10A6C13	0160-0575		1	CAPACITOR-FXO .047UF +-20% 50VOC CER	28480	0160-0575
A10A6C14	0160-0575		1	CAPACITOR-FXO .047UF +-20% 50VOC CER	28480	0160-0575
A10A6C15	0160-0575		1	CAPACITOR-FXO .047UF +-20% 50VOC CER	28480	0160-0575
A10A6C16	0160-4835		1	CAPACITOR-FXO .1UF +-10% 50VOC CER	28480	0160-4835
A10A6C17	0180-0197		1	CAPACITOR-FXO 2.2UF+-10% 20VOC TA	56289	150D225X9020A2
A10A6C18	0160-4835		1	CAPACITOR-FXO .1UF +-10% 50VDC CER	28480	0160-4835
A10A6C19	0180-0291		1	CAPACITOR-FXO 1UF+-10% 35VOC TA	56289	150D105X9035A2
A10A6C20	0160-4835		1	CAPACITOR-FXO .1UF +-10% 50VOC CER	28480	0160-4835
A10A6C21	0180-0197		1	CAPACITOR-FXO 2.2UF+-10% 20VOC TA	56289	150D225X9020A2
A10A6C22	0180-0197		1	CAPACITOR-FXO 2.2UF+-10% 20VOC TA	56289	150D225X9020A2
A10A6C23	0160-2437		1	CAPACITOR-FOTHRU 5000PF +80 -20% 200V	28480	0160-2437
A10A6C24	0160-2437		1	CAPACITOR-FOTHRU 5000PF +80 -20% 200V	28480	0160-2437
A10A6CR1	1901-0033		1	DIODE-GEN PRP 180V 200MA DO-7	28480	1901-0033
A10A6CR2	1901-0376		1	DIODE-GEN PRP 35V 50MA 00-35	28480	1901-0376
A10A6CR3	1901-0376		1	DIODE-GEN PRP 35V 50MA DO-35	28480	1901-0376
A10A6CR4	1901-0033		1	DIODE-GEN PRP 180V 200MA DO-7	28480	1901-0033
A10A6CR5	1901-0050		1	DIODE-SWITCHING 80V 200MA 2NS DO-35	28480	1901-0050
A10A6L1	9100-1651		1	INDUCTOR RF-CH-ML0 750UH +-5% .2DX.45LG	28480	9100-1651
A10A6L2	9140-0144		1	INDUCTOR RF-CH-ML0 4.7UH 10% .105DX.26LG	28480	9140-0144
A10A6L3	9140-0144		1	LNOUCTOR RF-CH-ML0 4.7UH 10% .105DX.26LG	28480	9140-0144
A10A6L4	9140-0144		1	LNOUCTOR RF-CH-ML0 4.7UH 10% .105DX.26LG	28480	9140-0144
A10A6MP2	2190-0009		2	WASHER-LK INTL T NO. 8 .168-IN-ID	28480	2190-0009
A10A6MP3	2200-0101		2	SCREW-MACH 4-40 .188-IN-LG PAN-HO-POZI	00000	ORDER BY DESCRIPTION
A10A6MP4	2580-0002		2	IUT-HEX-OBL-CHAM 8-32-THD.085-IN-THK	28480	2580-0002
A10A6MP5	8150-0013		1	WIRE, 22 AWG 1X22	92194	298
A10A6MP6	85660-20057		1	CVR PC 2 PHSOETC	28480	85660-20057
A10A6MP7	86701-40001		2	EXTRACTOR PC	28480	86701-40001
A10A6Q1	1853-0281		1	TRANSISTOR PNP 2N2907A SI TO-18 PD=400MW	04713	2N2907A
A10A6Q2	1854-0477		1	TRANSISTOR NPN 2N2222A SI TO-18 PD=500MW	04713	2N2222A
A10A6Q3	1855-0386		1	TRANSISTOR J-FET 2N4392 N-CHAN O-MODE TO	04713	2N4392
A10A6Q4	1853-0322		1	TRANSISTOR PNP 2N2946A SI TO-46 PD=400MW	01275	2N2946A
A10A6Q5	1854-0477		1	TRANSISTOR NPN 2N2222A SI TO-18 PD=500MW	04713	2N2222A
A10A6Q6	1854-0404		1	TRANSISTOR NPN SI TO-18 PD=360MW	28480	1854-0404

**Indicates factory-selected value*

HP Part Number 85660-60254

A10A6 PLL 2 Phase Detector

Reference Designatior	HP **Part** Number	C D	Qty	Description	**Mfr** Code	Mfr Part Number
A10A6Q7	1853-0281		1	TRANSISTOR PNP **2N2907A** SI TO-18 **PD=400MW**	04713	2N2907A
A10A6Q8	1854-0404		1	TRANSISTOR NPN SI TO-18 **PD=360MW**	28480	1854-0404
A10A6Q9	1853-0007		1	TRANSISTOR PNP **2N3251** SI TO-18 **PD=360MW**	04713	2N3251
A10A6Q10	1853-0007		1	TRANSISTOR PNP **2N3251** SI TO-18 **PD=360MW**	04713	2N3251
A10A6R1	0757-0280		1	RESISTOR **1K** +-1% **.125W** TF TC=O+-100	19701	SFR25H
A10A6R2	0757-0317		1	RESISTOR **1.33K** +-1% **.125W** TF TC=O+-100	19701	SFR25H
A10A6R3	0757-0280		1	RESISTOR **1K** +-1% **.125W** TF TC=O+-100	19701	SFR25H
A10A6R4	0757-0317		1	RESISTOR **1.33K +-1% .125W** TF TC=O+-100	19701	SFR25H
A10A6R5	0698-0083		1	RESISTOR **1.96K** 1% **.125W** TF TC=O+-100	19701	SFR25H
A10A6R6	0698-3440		1	RESISTOR 196 1% **.125W** TF TC=O+-100	19701	SFR25H
A10A6R7	0757-0123		1	RESISTOR **34.8K** +-1% **.125W** TF TC=O+-100	19701	SFR25H
A10A6R8	0698-0082		1	RESISTOR 464 1% **.125W** TF TC=O+-100	19701	SFR25H
A10A6R9	0757-0442		1	RESISTOR **10K** +-1% **.125W** TF TC=O+-100	19701	SFR25H
A10A6R10	0698-3260		1	RESISTOR 464K 1% **.125W** TF TC=O+-100	19701	SFR25H
A10A6R11	0757-0290		1	RESISTOR **6.19K** +-1% **.125W** TF TC=O+-100	19701	SFR25H
A10A6R12	0757-0420		1	RESISTOR 750 +-1% **.125W** TF TC=O+-100	19701	SFR25H
A10A6R13	0698-0084		1	RESISTOR **2.15K** 1% **.125W** TF TC=O+-100	19701	SFR25H
A10A6R14	0757-0280		1	RESISTOR **1K** +-1% **.125W** TF TC=O+-100	19701	SFR25H
A10A6R15	0757-0442		1	RESISTOR **10K** +-1% **.125W** TF TC=O+-100	19701	SFR25H
A10A6R16	3757-0439		1	RESISTOR **6.81K** +-1% **.125W** TF TC=O+-100	19701	SFR25H
A10A6R17	3757-0444		1	RESISTOR **12.1K +-1% .125W** TF TC=O+-100	19701	SFR25H
A10A6R18	0698-0084		1	RESISTOR **2.15K** 1% **.125W** TF TC=O+-100	19701	SFR25H
A10A6R19	0757-0280		1	RESISTOR **1K** +-1% **.125W** TF TC=O+-100	19701	SFR25H
A10A6R20	1698-3445		1	RESISTOR 348 1% **.125W** TF TC=O+-100	19701	SFR25H
A10A6R21	1698-3445		1	RESISTOR 348 1% **.125W** TF TC=O+-100	19701	SFR25H
A10A6R22	0757-0280		1	RESISTOR **1K** +-1% **.125W** TF TC=O+-100	19701	SFR25H
A10A6R23	0757-0279		1	RESISTOR **3.16K +-1% .125W** TF TC=O+-100	19701	SFR25H
A10A6R24	0698-3450		1	RESISTOR **42.2K** 1% **.125W** F TC=O+-100	24546	C4-1/8-TO-4222-F
A10A6R25	0757-0462		1	RESISTOR 75K +-1% **.125W** TF TC=O+-100	19701	SFR25H
A10A6R26	0757-0467		1	RESISTOR 121K +-1% **.125W** TF TC=O+-100	19701	SFR25H
A10A6R27	0698-3266		1	RESISTOR 237K 1% **.125W** TF TC=O+-100	19701	SFR25H
A10A6R28	0698-3460		1	RESISTOR 422K 1% **.125W** TF TC=O+-100	19701	SFR25H
A10A6R29	0757-0438		1	RESISTOR **5.11K** +-1% **.125W** TF TC=O+-100	19701	SFR25H
A10A6R30	0698-0084		1	RESISTOR **2.15K** 1% **.125W** TF TC=O+-100	19701	SFR25H
A10A6R31	0698-3154		1	RESISTOR **4.22K** 1% **.125W** TF TC=O+-100	19701	SFR25H
A10A6R32	0757-0438		1	RESISTOR **5.11K** +-1% **.125W** TF TC=O+-100	19701	SFR25H
A10A6R33	0698-0085		1	RESISTOR **2.61K** 1% **.125W** TF TC=O+-100	19701	SFR25H
A10A6R34	3698-3445		1	RESISTOR 348 1% **.125W** TF TC=O+-100	19701	SFR25H
A10A6R35	0757-0346		1	RESISTOR 10 +-1% **.125W** TF TC=O+-100	91637	CMF-55-1, T-1
A10A6R36	3757-0440		1	RESISTOR **7.5K** 1% **.125W** TF TC=O+-100	24546	C4-1/8-TO-7501-F
A10A6TP1	1251-0600		1	CONNECTOR-SGL CONT PIN **1.14-MM-BSC-SZ SQ**	27264	16-06-0034
A10A6TP2	1251-0600		1	CONNECTOR-SGL CONT PIN **1.14-MM-BSC-SZ SQ**	27264	16-06-0034
A10A6TP3	1251-0600		1	CONNECTOR-SGL CONT PIN **1.14-MM-BSC-SZ SQ**	27264	16-06-0034
A10A6TP4	1251-0600		1	CONNECTOR-SGL CONT PIN **1.14-MM-BSC-SZ SQ**	27264	16-06-0034
A10A6TP5	1251-0600		1	CONNECTOR-SGL CONT PIN **1.14-MM-BSC-SZ SQ**	27264	16-06-0034
A10A6U1	1826-0026		1	IC COMPARATOR PRCN TO-99 PKG	27014	LM311H
A10A6U2	1826-0459		1	IC OP AMP 14-DIP-C PKG	27014	LH0042CD

Indicates factory-selected value

HP Part Number 85660-60254

A10A6 PLL 2 Phase Detector

Reference Designation	HP Part Number	C.D	Qty	Description	Mfr Code	Mfr Part Number
A10A6U3	1826-0059	2	1	IC OP AMP GP TO-99 PKG	27014	LM201AH
A10A6U4	1826-0059	2	1	IC OP AMP GP TO-99 PKG	27014	LM201AH
A10A6U5	1820-0429	8	1	IC V RGLTR-FXO-POS 4.8/5.2V TO-39 PKG	27014	LM309H
A10A6U6	1820-1212	9	1	IC FF TTL LS J-K NEG-EDGE-TRIG PRESET/CL	01295	SN74LS112AN
A10A6U7	.820-1425	6	1	IC SCHMITT-TRIG TTL LS NAND QUAD 2-INP	01295	SN74LS132N
A10A6U8	.820-1194	6	1	IC CNTR TTL LS BIN UP/DOWN SYNCHRO POS-E	01295	SN74LS193N
A10A6U9	.820-1194	6	1	IC CNTR TTL LS BIN UP/DOWN SYNCHRO POS-E	01295	SN74LS193N
A10A6U10	.826-0448	3	1	O/A 10-BIT 16-PLASTIC CMOS	24355	AD7533LN(SEL)
A10A6VR2	.902-0041	4	1	DIODE-ZNR 5.11V 5% DO-35 PD=.4W	04713	
A10A6VR3	902-0041	4	1	DIODE-ZNR 5.11V 5% DO-35 PD=.4W	04713	
A10A6VR4	902-3002	3	1	DIODE-ZNR 2.37V 5% DO-7 PD=.4W TC=-.074%	04713	

**Indicates factory-selected value*

HP Part Number 85660-60276

A10A6 PLL 2 Phase Detector

Reference Designatior	HP Part Number	C D	Qty	Description	Mfr Code	Mfr Part Number
A10A6	85660-60276		1	BOARD ASSEMBLY, PLL2 PHASE DETECTOR (SERIAL PREFIX: 2618A)	2848C	85660-60276
A10A6C1	0180-0197		1	CAPACITOR-FXO 2.2UF+-10% 20VDC TA	56289	150D225X9020A2-DYS
A10A6C2	0160-0574		1	CAPACITOR-FXO .022UF +-20% 100VDC CER	04222	SR201C223MAAH
A10A6C3	0160-4832		1	CAPACITOR-FXO .01UF +-10% 100VDC CER	04222	SA101C103KAAH
A10A6C4	0160-4892		1	CAP-FXO 1uF 25 V	56289	2C37Z5U105M025C
A10A6C5	0160-4892		1	CAP-FXO 1uF 25 V	56289	2C37Z5U105M025C
A10A6C6	0160-2199		1	CAPACITOR-FXO 30PF +-5% 300VOC MICA	09023	CD15ED300J03
A10A6C7	0160-5609		1	CAPACITOR-FXO 10UF +-10% 50VOC MET-POLYC	84411	HEW-687
A10A6C8	0160-4835		1	CAPACITOR-FXO .1UF +-10% 50VDC CER	04222	SA115C104KAAH
A10A6C9	0160-0573		1	CAPACITOR-FXO 4700PF +-20% 100VDC CER	04222	SR201C472MAAH
A10A6C10	0160-2199		1	CAPACITOR-FXO 30PF +-5% 300VOC MICA	09023	CD15ED300J03
A10A6C11	0180-0291		1	CAPACITOR-FXO 1UF+-10% 35VOC TA	56289	150D105X9035A2-DYS
A10A6C12	0180-0291		1	CAPACITOR-FXO 1UF+-10% 35VOC TA	56289	150D105X9035A2-DYS
A10A6C14	0160-0575		1	CAP-FXO 0.047uF 50 V CER	04222	SR205C473MAAH
A10A6C15	0160-0575		1	CAP-FXO 0.047uF 50 V CER	04222	SR205C473MAAH
A10A6C16	0160-4835		1	CAPACITOR-FXO .1UF +-10% 50VOC CER	04222	SA115C104KAAH
A10A6C17	0180-0197		1	CAPACITOR-FXO 2.2UF+-10% 20VDC TA	56289	150D225X9020A2-DYS
A10A6C18	0160-4835		1	CAPACITOR-FXO .1UF +-10% 50VOC CER	04222	SA115C104KAAH
A10A6C19	0180-0291		1	CAPACITOR-FXO 1UF+-10% 35VOC TA	56289	150D105X9035A2-DYS
A10A6C20	0160-4835		1	CAPACITOR-FXO .1UF +-10% 50VOC CER	04222	SA115C104KAAH
A10A6C21	0180-0197		1	CAPACITOR-FXO 2.2UF+-10% 20VDC TA	56289	150D225X9020A2-DYS
A10A6C22	0180-0197		1	CAPACITOR-FXO 2.2UF+-10% 20VOC TA	56289	150D225X9020A2-DYS
A10A6C23	0160-2437		1	CAPACITOR-FOTHRU 5000PF +80 -20% 200V	33095	54-713-033-X5V-502Z
A10A6C24	0160-2437		1	CAPACITOR-FOTHRU 5000PF +80 -20% 200V	33095	54-713-033-X5V-502Z
A10A6CR1	1901-0033		1	DIODE-GEN PRP 180V 200MA DO-35	9N171	1N645
A10A6CR2	1901-0376		1	DIODE-GEN PRP 35V 50MA DO-35	9N171	1N3595
A10A6CR3	1901-0376		1	DIODE-GEN PRP 35V 50MA DO-35	9N171	1N3595
A10A6CR4	1901-0033		1	DIODE-GEN PRP 180V 200MA DO-35	9N171	1N645
A10A6CR5	1901-0050		1	DIODE-SWITCHING BOV 200MA 2NS DO-35	9N171	1N4150
A10A6L1	9100-1651		1	INDUCTOR RF-CH-ML0 750UH +-5% .2D-	99800	2500-22
A10A6L2	9140-0144		1	INDUCTOR RF-CH-ML0 4.7UH +-10% .105D-	99800	1025-36
A10A6L3	3140-0144		1	INDUCTOR RF-CH-ML0 4.7UH +-10% .105D-	99800	1025-36
A10A6L4	3140-0144		1	INDUCTOR RF-CH-ML0 4.7UH +-10% .105D-	99800	1025-36
A10A6MP1				YOT ASSIGNED		
A10A6MP2	2190-0009		2	WASHER-LK INTL T NO. 8 .168-IN-ID	06791	820-BC
A10A6MP3	2200-0101		2	SCREW-MACH 4-40 .188-IN-LG PAN-HO-POZI	77250	
A10A6MP4	2580-0002		2	VUT-HEX-OBL-CHAM 8-32-THD.085-IN-THK	80120	
A10A6MP5	3151-0013		2	JIRE 22AWG 1X22	92194	298
A10A6MP6	35660-20057		1	COVER PC, PLL2 PHASE DETECTOR	28480	85660-20057
A10A6MP7	36701-40001		2	EXTRACTOR, PC	28480	86701-40001
A10A6Q1	1853-0281		1	TRANSISTOR PNP 2N2907A SI TO-18 PD=400MW	04713	2N2907A
A10A6Q2	1854-0477		1	TRANSISTOR NPN 2N2222A SI TO-18 PD=500MW	04713	2N2222A
A10A6Q3	1855-0386		1	TRANSISTOR J-FET 2N4392 N-CHAN O-MODE TO	04713	2N4392
A10A6Q4	1853-0322		1	TRANSISTOR PNP 2N2946A SI TO-46 PD=400MW	04713	
A10A6Q5	1854-0477		1	TRANSISTOR NPN 2N2222A SI TO-18 PD=500MW	04713	2N2222A
A10A6Q6	1854-0404		1	TRANSISTOR NPN SI TO-18 PD=360MW	04713	

**Indicates factoryselected value*

HP Part Number 85660-60276

A10A6 PLL 2 Phase Detector

Reference Designatior	HP Part Number	C D	Qty	Description	Mfr Code	Mfr Part Number
A10A6Q7	1853-0281	9	1	TRANSISTOR PNP 2N2907A SI TO-18 PD=400M	0471:	2N2907A
A10A6Q8	1854-0404	0	1	TRANSISTOR NPN SI TO-18 PD=360MW	0471:	
A10A6Q9	1853-0007		1	TRANSISTOR PNP 2N3251 SI TO-18 PD=360MW	0471:	2N3251
A10A6Q10	1853-0007		1	TRANSISTOR PNP 2N3251 SI TO-18 PD=360MW	0471:	2N3251
A10A6Q11	1853-0281	9	1	TRANSISTOR PNP 2N2907A SI TO-18 PD=400M	0471:	2N2907A
A10A6R1	0757-0280	3	1	RESISTOR 1K +-1% .125W TF TC=O+-100	19701	SFR25H
A10A6R2	0757-0317	7	1	RESISTOR 1.33K +-1% .125W TF TC=O+-100	19701	SFR25H
A10A6R3	0757-0280	3	1	RESISTOR 1K +-1% .125W TF TC=O+-100	19701	SFR25H
A10A6R4	0757-0317	7	1	RESISTOR 1.33K +-1% .125W TF TC=O+-100	19701	SFR25H
A10A6R5	0698-0083	8	1	RESISTOR 1.96K 1% .125W TF TC=O+-100	19701	SFR25H
A10A6R6	0698-3440	1	1	RESISTOR 196 1% .125W TF TC=O+-100	19701	SFR25H
A10A6R7	0757-0123	3	1	RESISTOR 34.8K +-1% .125W TF TC=O+-100	19701	SFR25H
A10A6R8	0698-0082	7	1	RESISTOR 464 1% .125W TF TC=O+-100	19701	SFR25H
A10A6R9	0757-0442	0	1	RESISTOR 10K +-1% .125W TF TC=O+-100	19701	SFR25H
A10A6R10	0698-3260	0	1	RESISTOR 464K 1% .125W TF TC=O+-100	19701	SFR25H
A10A6R11	0757-0290	5	1	RESISTOR 6.19K +-1% .125W TF TC=O+-100	19701	SFR25H
A10A6R12	0757-0420	3	1	RESISTOR 750 +-1% .125W TF TC=O+-100	19701	SFR25H
A10A6R13	0698-0084	9	1	RESISTOR 2.15K 1% .125W TF TC=O+-100	19701	SFR25H
A10A6R14	0757-0280	3	1	RESISTOR 1K +-1% .125W TF TC=O+-100	19701	SFR25H
A10A6R15	0757-0442	9	1	RESISTOR 10K +-1% .125W TF TC=O+-100	19701	SFR25H
A10A6R16	0757-0439	4	1	RESISTOR 6.81K +-1% .125W TF TC=O+-100	19701	SFR25H
A10A6R17	0757-0444	1	1	RESISTOR 12.1K +-1% .125W TF TC=O+-100	19701	SFR25H
A10A6R18	3698-0084	9	1	RESISTOR 2.15K 1% .125W TF TC=O+-100	19701	SFR25H
A10A6R19	0757-0280	3	1	RESISTOR 1K +-1% .125W TF TC=O+-100	19701	SFR25H
A10A6R20	3698-3445	2	1	RESISTOR 348 1% .125W TF TC=O+-100	19701	SFR25H
A10A6R21	3698-3445	2	1	RESISTOR 348 1% .125W TF TC=O+-100	19701	SFR25H
A10A6R22	3757-0280	3	1	RESISTOR 1K +-1% .125W TF TC=O+-100	19701	SFR25H
A10A6R23	3757-0279	0	1	RESISTOR 3.16K +-1% .125W TF TC=O+-100	19701	SFR25H
A10A6R24	0757-0442	9	1	RESISTOR 10K +-1% .125W TF TC=O+-100	19701	SFR25H
A10A6R25	0757-0462	3	1	RESISTOR 75K +-1% .125W TF TC=O+-100	19701	SFR25H
A10A6R26	1757-0467	8	1	RESISTOR 121K +-1% .125W TF TC=O+-100	19701	SFR25H
A10A6R27	1698-3266	5	1	RESISTOR 237K 1% .125W TF TC=O+-100	19701	SFR25H
A10A6R28	1698-3460	1	1	RESISTOR 422K 1% .125W TF TC=O+-100	19701	SFR25H
A10A6R29	0757-0438	3	1	RESISTOR 5.11K +-1% .125W TF TC=O+-100	19701	SFR25H
A10A6R30	0698-0084	9	1	RESISTOR 2.15K 1% .125W TF TC=O+-100	19701	SFR25H
A10A6R31	0698-3154	0	1	RESISTOR 4.22K 1% .125W TF TC=O+-100	19701	SFR25H
A10A6R32	0757-0438	3	1	RESISTOR 5.11K +-1% .125W TF TC=O+-100	19701	SFR25H
A10A6R33	0698-0085	0	1	RESISTOR 2.61K 1% .125W TF TC=O+-100	19701	SFR25H
A10A6R34	0698-3445	2	1	RESISTOR 348 1% .125W TF TC=O+-100	19701	SFR25H
A10A6R35	0757-0346	2	1	RESISTOR 10 +-1% .125W TF TC=O+-100	91637	CMF-55-1, T-1
A10A6R36	0757-0274	5	1	RESISTOR 1.21K +-1% .125W TF TC=O+-100	19701	SFR25H
A10A6TP1	0251-0600	3	1	CONNECTOR-SGL CONT PIN 1.14-MM-BSC-SZ SQ	27264	16-06-0034
A10A6TP2	0251-0600	3	1	CONNECTOR-SGL CONT PIN 1.14-MM-BSC-SZ SQ	27264	16-06-0034
A10A6TP3	0251-0600	3	1	CONNECTOR-SGL CONT PIN 1.14-MM-BSC-SZ SQ	27264	16-06-0034
A10A6TP4	0251-0600	3	1	CONNECTOR-SGL CONT PIN 1.14-MM-BSC-SZ SQ	27264	16-06-0034
A10A6TP5	0251-0600	3	1	CONNECTOR-SGL CONT PIN 1.14-MM-BSC-SZ SQ	27264	16-06-0034
A10A6U1	1826-0026	3	1	IC COMPARATOR PRCN TO-99 PKG	27014	LM311H
A10A6U2	1826-0459	5	1	IC OP AMP 14-DIP-C PKG	27014	LH0042CD

Indicates factory-selected value

HP Part Number 85660-60276

A10A6 PLL 2 Phase Detector

Reference Designation	HP Part Number	C D	Qty	Description	Mfr Code	Mfr Part Number
A10A6U3	1826-0059	2	1	IC OP AMP GP TO-99 PKG	27014	LM201AH
A10A6U4	1826-0059	2	1	IC OP AMP GP TO-99 PKG	27014	LM201AH
A10A6U5	1820-0429	8	1	IC V RGLTR-FXD-POS 4.8/5.2V TO-39 PKG	27014	LM309H
A10A6U6	1820-1212	9	1	IC FF TTL LS J-K NEG-EDGE-TRIG PRESET/CL	01295	SN74LS112AN
A10A6U7	1820-1425	6	1	IC SCHMITT-TRIG TTL LS NAND QUAD 2-INP	01295	SN74LS132N
A10A6U8	1820-1194	6	1	IC CNTR TTL LS BIN UP/DOWN SYNCHRO POS-E	01295	SN74LS193N
A10A6U9	1820-1194	6	1	IC CNTR TTL LS BIN UP/DOWN SYNCHRO POS-E	01295	SN74LS193N
A10A6U10	1826-0448	3	1	D/A 10-BIT 16-PLASTIC CMOS	24355	AD7533LN(SEL)
A10A6VR2	1902-0041	4	1	DIODE-ZNR 5.11V 5% DO-35 PD=.4W	04713	
A10A6VR3	1902-0041	4	1	DIODE-ZNR 5.11V 5% DO-35 PD=.4W	04713	
A10A6VR4	1902-3002	3	1	DIODE-ZNR 2.37V 5% DO-7 PD=.4W TC=-.074%	04713	

**Indicates factory-selected value*

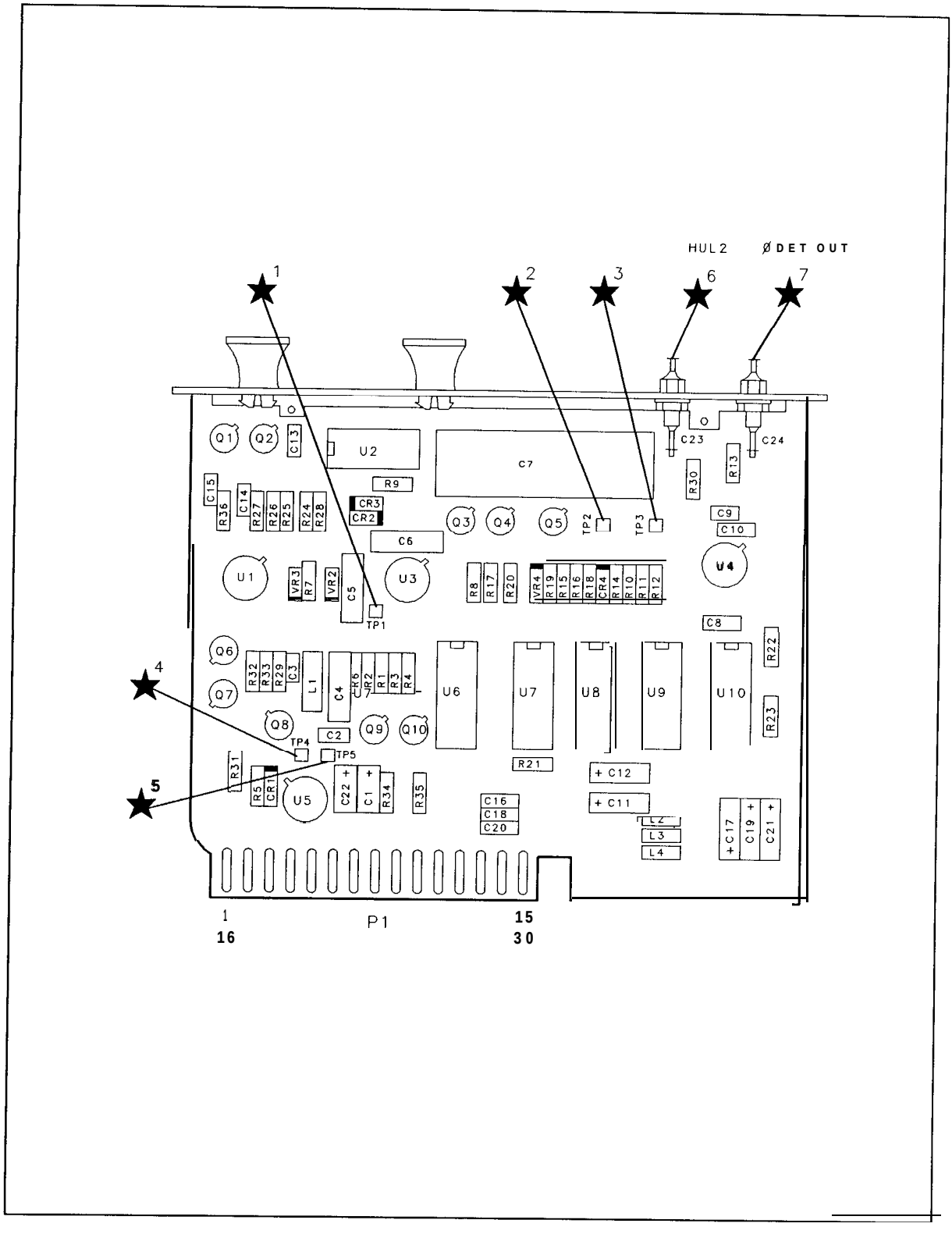

A10A6 PLL2 Phase Detector Component Locations, 85660-60130, 85660-60229

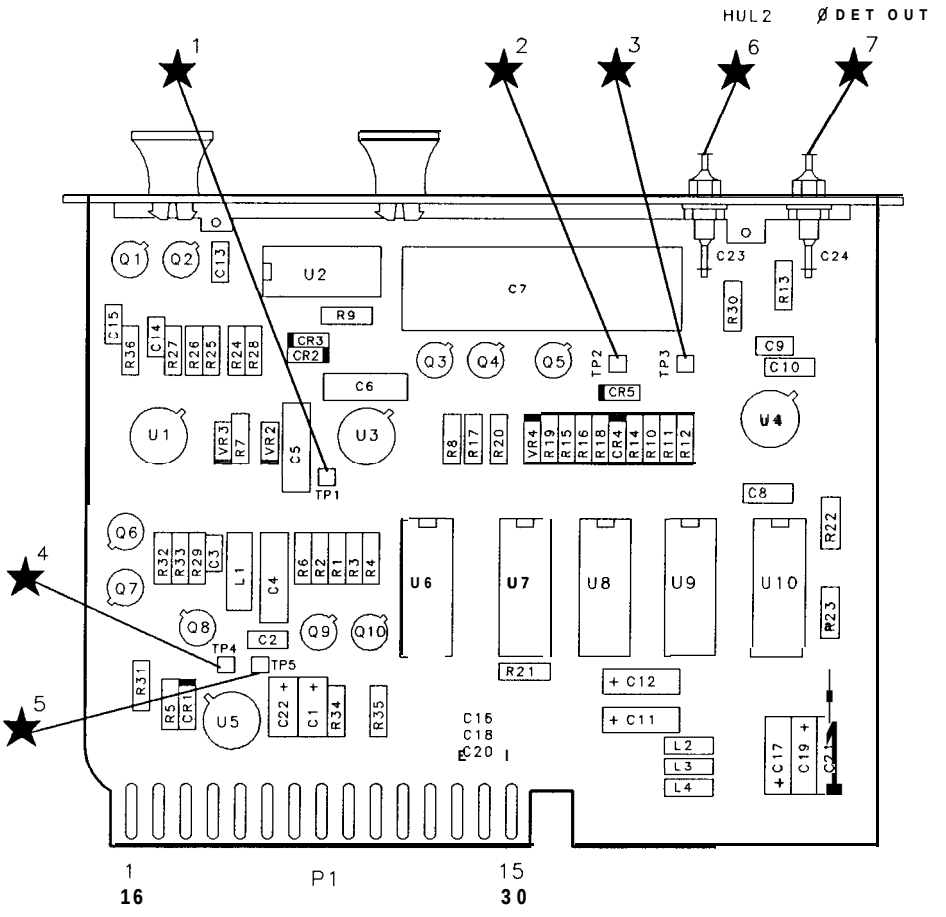

A10A6 PLL2 Phase Detector Component Locations, 85660-60254

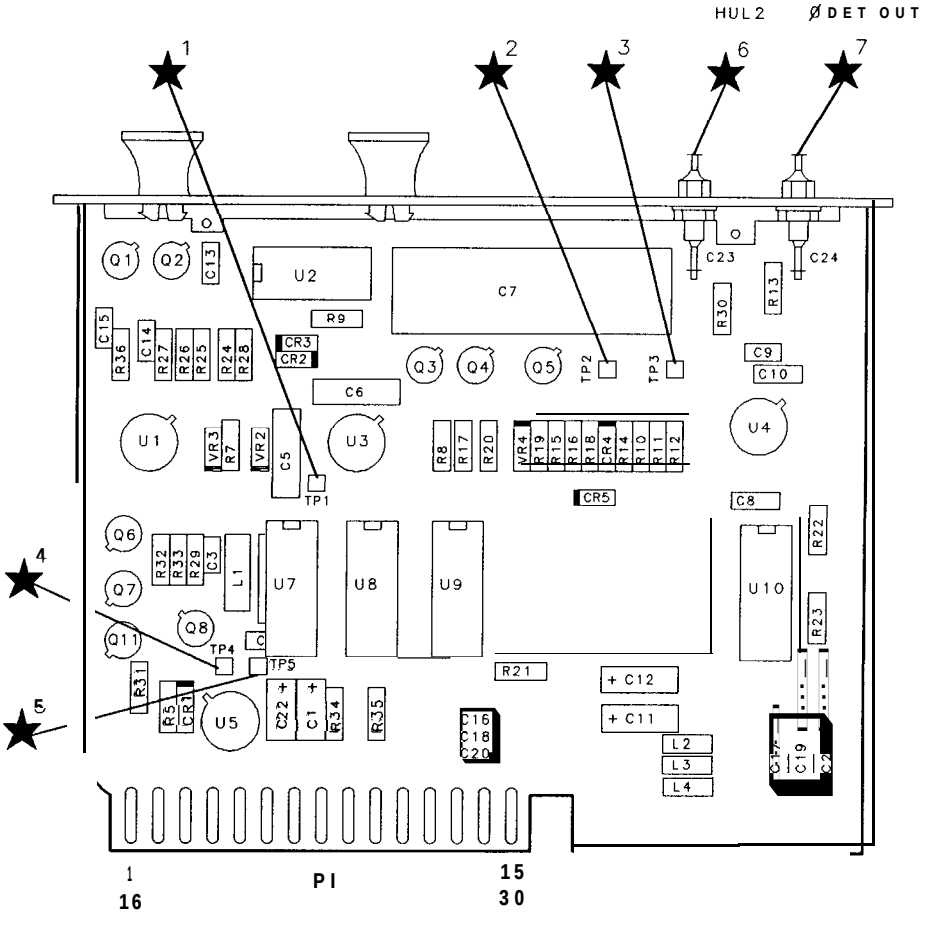

A10A6 PLL2 Phase Detector Component Locations, 85660-60276

A10A6 PHASE LOCK LOOP 2 (PLL2) PHASE DETECTOR

85660-60130
(SERIAL PREFIX: 2410A)
85660-60229
(SERIAL PREFIXES: 2416A-2504A)

P1

PIN	SIGNAL	TO/FROM	FUNCTION BLOCK
1	GND		F
16	GND		F
2	HLE2	A12P3-28	C
17	N.C.		
3	GND		F
18	GND		F
4	HUL2 DIVIDED OUTPUT	A12P3-27	B
19		A10A7P1-27	A
5	N.C.		
20	500 KHz	A10A7P1-9	A
6	GND		F
21	GND		F
7	-7V	A10A8P1-9	F
22	GND		F
8	SCAN GND TUNING VOLTAGE	A10A8P1-10	F
23		A10A8P1-28	E
9	N.C.		
24	N.C.		
10	GND		F
25	GND		F
11	GND		F
26	GND		F
12	-10V		F
27	-10V		F
13	+20V		F
28	+20V		F
14	GND		F
29	GND		F
15	+5.2V		F
30	+5.2V		F

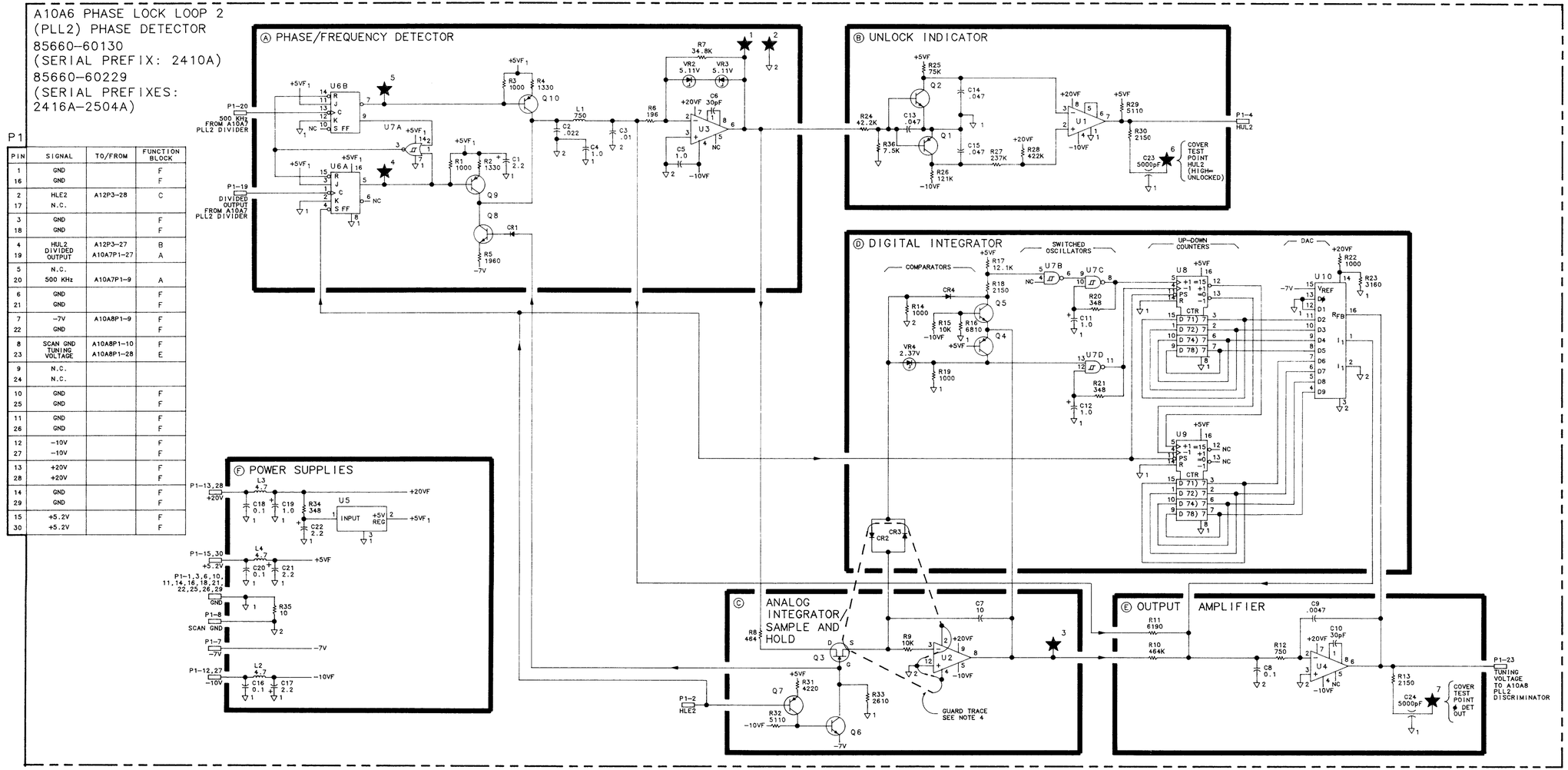

NOTES:

1. REFERENCE DESIGNATORS WITHIN THIS ASSEMBLY ARE ABBREVIATED. FOR COMPLETE REFERENCE DESIGNATION, PREFIX ABBREVIATION WITH ASSEMBLY DESIGNATION.
2. UNLESS OTHERWISE INDICATED: RESISTANCE IS IN OHMS (Ω) CAPACITANCE IS IN MICROFARADS (μF) INDUCTANCE IS IN MICROHENRIES (μH)
3. UNLESS OTHERWISE INDICATED: SIGNALS ENTER AT LEFT SIDE AND EXIT AT RIGHT SIDE OF FUNCTION BLOCKS.
4. PINS 2 AND 4 OF OP AMP U2 HAVE NO ELECTRICAL CONNECTION TO THE OP AMP.
5. MNEMONICS TABLE:

MNEMONIC	DESCRIPTION
HLE2	HIGH=PHASE LOCK LOOP 2 LOCK ENABLE
HUL2	HIGH=PHASE LOCK LOOP 2 UNLOCKED

A10A6

A10A6 PLL2 PHASE DETECTOR, SCHEMATIC DIAGRAM

A10A6 PHASE LOCK LOOP 2 (PLL2) PHASE DETECTOR 85660-60254 (SERIAL PREFIXES: 2511A-2613A)

P1

PIN	SIGNAL	TO/FROM	FUNCTION BLOCK
1	GND		F
16	GND		F
2	HLE2	A12P3-28	C
17	N.C.		
3	GND		F
18	GND		F
4	HUL2	A12P3-27	B
19	DIVIDED OUTPUT	A10A7P1-27	A
5	N.C.		
20	500 KHz	A10A7P1-9	A
6	GND		F
21	GND		F
7	-7V	A10A8P1-9	F
22	GND		F
8	SCAN GND TUNING VOLTAGE	A10A8P1-10	F
23		A10A8P1-28	E
9	N.C.		
24	N.C.		
10	GND		F
25	GND		F
11	GND		F
26	GND		F
12	-10V		F
27	-10V		F
13	+20V		F
28	+20V		F
14	GND		F
29	GND		F
15	+5.2V		F
30	+5.2V		F

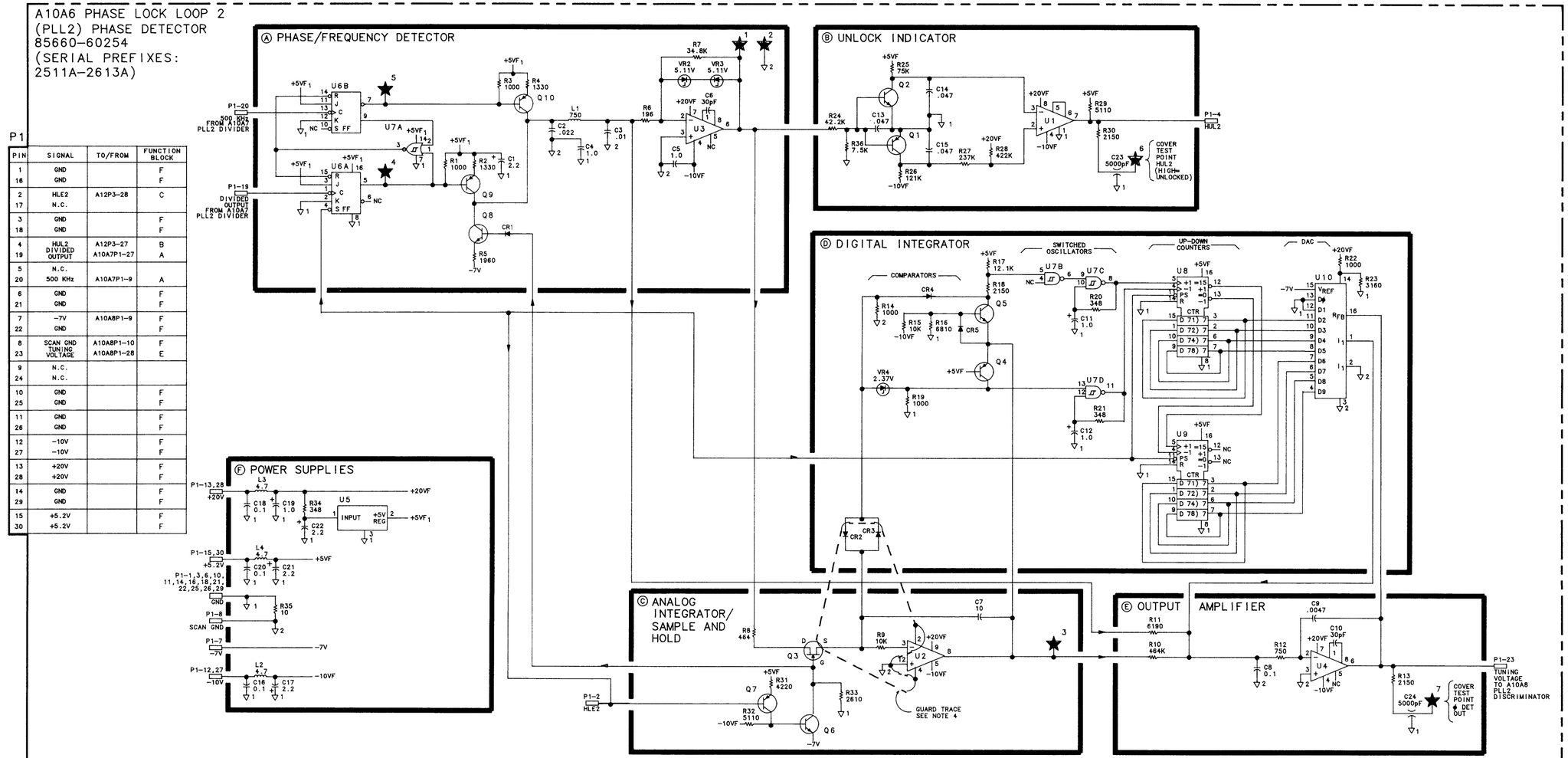

NOTES:

1. REFERENCE DESIGNATORS WITHIN THIS ASSEMBLY ARE ABBREVIATED. FOR COMPLETE REFERENCE DESIGNATION PREFIX ABBREVIATION WITH ASSEMBLY DESIGNATION.
2. UNLESS OTHERWISE INDICATED: RESISTANCE IS IN OHMS (Ω). CAPACITANCE IS IN MICROFARADS (μF) INDUCTANCE IS IN MICROHENRIES (μH)
3. UNLESS OTHERWISE INDICATED: SIGNALS ENTER AT LEFT SIDE AND EXIT AT RIGHT SIDE OF FUNCTION BLOCKS.
4. PINS 2 AND 4 OF OP AMP U2 HAVE NO ELECTRICAL CONNECTION TO THE OP AMP.
5. MNEMONICS TABLE:

MNEMONIC	DESCRIPTION
HLE2	HIGH=PHASE LOCK LOOP 2 LOCK ENABLE
HUL2	HIGH=PHASE LOCK LOOP 2 UNLOCKED

A10A6

A10A6 PHASE LOCK LOOP 2 (PLL2) PHASE DETECTOR 85660-60276 (SERIAL PREFIX: 2618A)

P1

PIN	SIGNAL	TO/FROM	FUNCTION BLOCK
1	GND		F
16	GND		F
2	HLE2	A12P3-28	C
17	N.C.		
3	GND		F
18	GND		F
4	HUL2 DIVIDED OUTPUT	A12P3-27	B
19		A10A7P1-27	A
5	N.C.		
20	500 KHz	A10A7P1-9	A
6	GND		F
21	GND		F
7	-7V	A10A8P1-9	F
22	GND		F
8	SCAN GND TUNING VOLTAGE	A10A8P1-10	F
23		A10A8P1-28	E
9	N.C.		
24	N.C.		
10	GND		F
25	GND		F
11	GND		F
26	GND		F
12	-10V		F
27	-10V		F
13	+20V		F
28	+20V		F
14	GND		F
29	GND		F
15	+5.2V		F
30	+5.2V		F

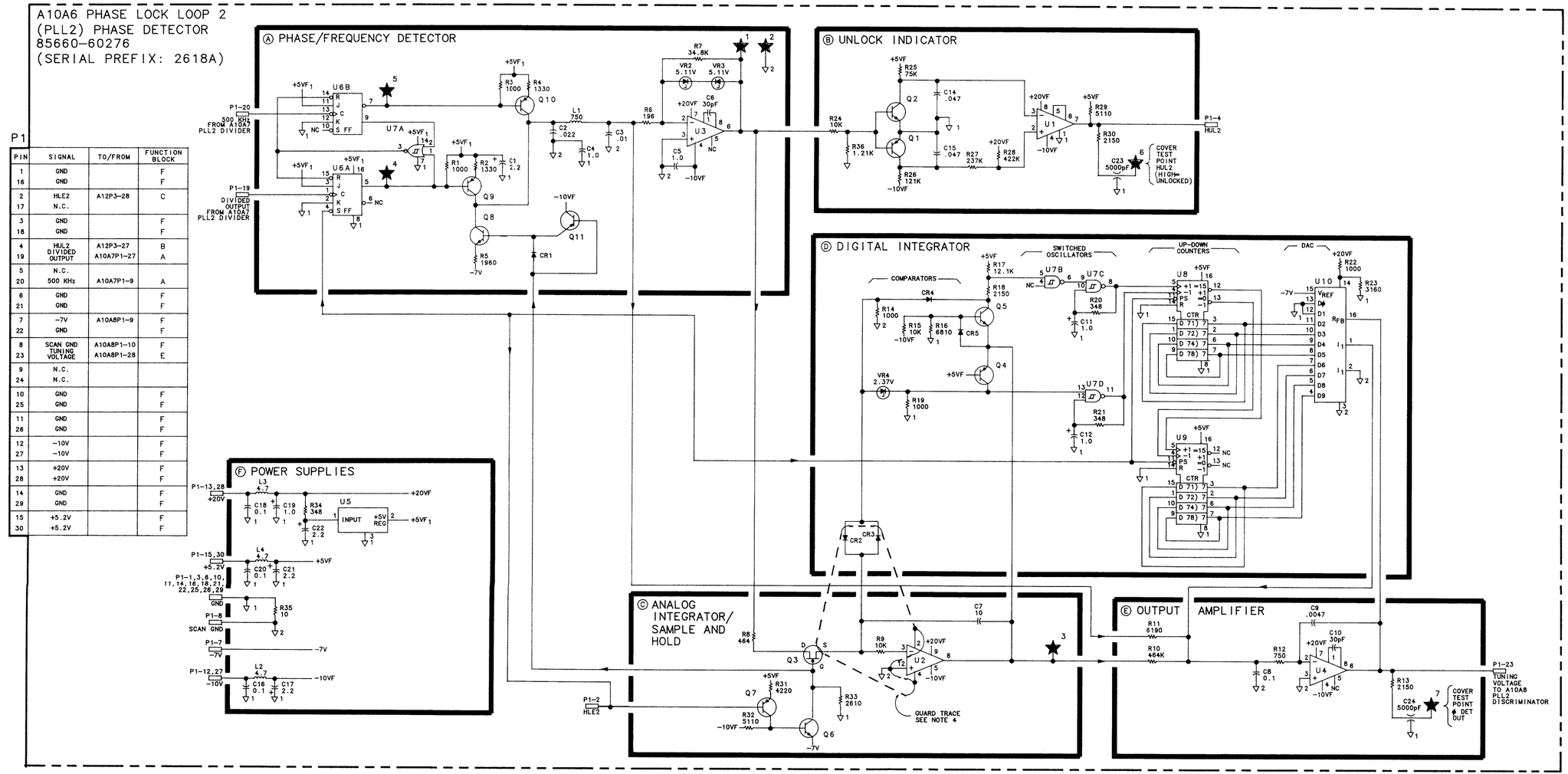

NOTES:

1. REFERENCE DESIGNATORS WITHIN THIS ASSEMBLY ARE ABBREVIATED. FOR COMPLETE REFERENCE DESIGNATION, PREFIX ABBREVIATION WITH ASSEMBLY DESIGNATION.
2. UNLESS OTHERWISE INDICATED: RESISTANCE IS IN OHMS (Ω) CAPACITANCE IS IN MICROFARADS (μF) INDUCTANCE IS IN MICROHENRIES (μH)
3. UNLESS OTHERWISE INDICATED: SIGNALS ENTER AT LEFT SIDE AND EXIT AT RIGHT SIDE OF FUNCTION BLOCKS.
4. PINS 2 AND 4 OF OP AMP U2 HAVE NO ELECTRICAL CONNECTION TO THE OP AMP.
5. MNEMONICS TABLE:

MNEMONIC	DESCRIPTION
HLE2	HIGH=PHASE LOCK LOOP 2 LOCK ENABLE
HUL2	HIGH=PHASE LOCK LOOP 2 UNLOCKED

A10A6

A10A6 PLL2 PHASE DETECTOR, SCHEMATIC DIAGRAM

A10A7

A10A7 Phase Lock Loop 2 (PLL2) Divider, Circuit Description

Reference Divider Ⓐ

A 10 MHz signal derived from the quartz crystal reference is amplified by Q2 and used to drive divider U4. The divide by 10 output of U4 drives U16, whose divide by 2 output goes to the A10A6 PLL2 Phase Detector. This 500 kHz signal is used as a reference to which the programmable divide output of the PLL2 Divider is compared. The TTL input on Pl-2 disables the reference divider during sweeps.

Prescaler Ⓑ

The -18 dBm, 75 to 150 MHz input from A10A5 PLL2 VCO, is amplified by Q1 and used to drive prescaler U1A which is a variable-module divider. It divides by 10 if pin 9, "PSW" is high; it divides by 11 if pin 9 is low. U1B is an ECL circuit which contains an ECL to TTL translator. Pin 7 is the TTL output, which drives gate U9C. U9C is used as a buffer to drive the multiple of loads on its output; the "CLK" line.

The prescaler should be thought of as a ÷10 with the ability to "swallow" input pulses. If the PSW line is low, in effect one input pulse is lost (swallowed) for each output (CLK) pulse produced.

Latches Ⓒ

U12, U13, and U14 are latches which store the divider programming number. The number is clocked into the latches with LCK1 and LCK2. U14 also latches in SW1 and SW2, which are sent to A10A5 PLL2 VCO and A10A1 PLL1 VCO.

Direct Divide Ⓕ

U8 and U15 are cascaded dividers whose state outputs are sensed by U9B. The CLK line from the prescaler clocks U8. When the count reaches 25, the output of U9B goes high. This initiates a divide sequence by J-K flip-flops U10A and U10B, which are clocked by CLK. The Q output of U10A goes high on a count of 27 and low on 29. This signal is output to the A10A6 PLL2 Phase Detector. The Q output of U10A goes low on a count of 27, resetting U8 and U15. When it returns high on 29, the sequence resumes.

U15 is preset to a count of zero and U8 to a count of 0 to 9 depending on input data. Thus, if U8 is preset to 0, the circuit divides by 29. If preset to 9, the circuit divides by 20.

Since the prescaler has already divided by 10, the 75 to 150 MHz input is divided by numbers 200, 210, . . . 290 according to the BCD digit programming U8. Since the output is locked to 500 kHz by the phase lock loop, the VCO is programmed from 100 to 145 MHz in 5 MHz steps.

Synchronizer Ⓓ

Other divide numbers are provided through the pulse swallowing technique. The output frequency is held by the lock loop to 500 kHz. If N input pulses per second are swallowed, the input frequency must rise by N Hz to keep the output constant. If N input pulses are swallowed for each output pulse, input frequency must rise by N x 500 kHz.

The pulse swallow synchronizer accepts pulses from the fractional counter and integer counter, and at the proper time, as determined by the CLK line, drops the PSW line to swallow input pulses.

Integer Counter Ⓔ

U7 is a presettable counter which is preset to an externally programmable count by the RST line. RST pulses come from the direct divide output, and occur at a 500 kHz rate. After each RST pulse, U7 counts CLK pulses until a count of 9 is reached. A count of 9 causes the output of U9A to go high. The pulse swallow synchronizer drops the PSW line on CLK pulse after the RST pulse, and raises it two CLK pulses after U9A goes high. PSW therefore is low one CLK pulse longer than the count time. If U7 is preset to N, (9-N) + 1 input pulses will be swallowed for each CLK pulse, forcing the input frequency to rise by (10-N) x 500 kHz.

Fractional Counter Ⓖ

U5 and U6 are rate multipliers. They provide the function $F_{OUT} = F_{IN} \times N/100$ where N is a two digit BCD number (8 bits). The least significant digit goes to U5, the other to U6. The output comes from U5 and triggers a 1.6 μs pulse from one-shot multivibrator U11.

The input frequency to the rate multipliers is 500 kHz, so F_{OUT} = N x 5 kHz.

The output from U11 goes to U2A. A high input at U2A causes the synchronizer to swallow one less pulse per RST pulse than it would have other wise. The fractional counter therefore causes the input frequency to drop by N x 5 kHz, where N ranges from 0 to 99.

HP Part Number 85660-60028

A10A7 PLL 2 Divider

Reference Designation	HP Part Number	c-lc	Qty	Description	Mfr Code	Mfr Part Number
A10A7	85660-60028	C	1	BOARD ASSEMBLY, PLL 2 DIVIDER	28480	85660-60028
A10A7C1	0160-3877	F	1	CAPACITOR-FXD 100PF +-20% 200VDC CER	04222	SR202C101MAAH
A10A7C2	0160-3879	7	1	CAPACITOR-FXD .01UF +-20% 100VDC CER	04222	SR201C103MAAH
A10A7C3	0160-4084	8	1	CAP-FXD 0.1uF 50 V	56289	1C20X7R104M050B
A10A7C4	0160-3877	5	1	CAPACITOR-FXD 100PF +-20% 200VDC CER	04222	SR202C101MAAH
A10A7C5	0160-4084	8	1	CAP-FXD 0.1uF 50 V	56289	1C20X7R104M050B
A10A7C6	0160-4084	8	1	CAP-FXD 0.1uF 50 V	56289	1C20X7R104M050B
A10A7C7	0160-4084	8	1	CAP-FXD 0.1uF 50 V	56289	1C20X7R104M050B
A10A7C8	0160-3879	7	1	CAPACITOR-FXD .01UF +-20% 100VDC CER	04222	SR201C103MAAH
A10A7C9	0160-4084	8	1	CAP-FXD 0.1uF 50 V	56289	1C20X7R104M050B
A10A7C10	0160-4084	8	1	CAP-FXD 0.1uF 50 V	56289	1C20X7R104M050B
A10A7C11	0160-4084	8	1	CAP-FXD 0.1uF 50 V	56289	1C20X7R104M050B
A10A7C12	0160-4084	a	1	CAP-FXD 0.1uF 50 V	56289	1C20X7R104M050B
A10A7C13	0160-4084	a	1	CAP-FXD 0.1uF 50 V	56289	1C20X7R104M050B
A10A7C14	C1160-0570	9	1	CAPACITOR-FXD 220PF +-20% 100VDC CER	04222	SR201C221MAAH
A10A7C15	C1160-4084	a	1	CAP-FXD 0.1uF 50 V	56289	1C20X7R104M050B
A10A7C16	C1160-4084	a	1	CAP-FXD 0.1uF 50 V	56289	1C20X7R104M050B
A10A7C17	0160-4084	8	1	CAP-FXD 0.1uF 50 V	56289	1C20X7R104M050B
A10A7C18	0180-1746	5	1	CAPACITOR-FXD 15UF+-10% 20VDC TA	56289	150D156X9020B2-DYS
A10A7C19	C1180-1746	5	1	CAPACITOR-FXD 15UF+-10% 20VDC TA	56289	150D156X9020B2-DYS
A10A7CR1	1901-0743	1	1	DIODE-PWR RECT IN4004 400V 1A DO-41	71744	1N4004
A10A7CR2	1901-0743	1	1	DIODE-PWR RECT 1N4004 400V 1A DO-41	71744	1N4004
A10A7J2	1250-0544	9	1	CONNECTOR-RF SM-SNP M SGL-HOLE-FR 50-OHM	98291	051-049-0000-220
A10A7L1	91100-2250	9	1	INDUCTOR RF-CH-MLD 180NH +-10% .105D-INX	24226	10M180K
A10A7L2	91100-1788	6	1	CORE-FERRITE CHOKE-WIDEBAND IMP:680	02114	VK200 20/4B
A10A7L3	91100-1618	1	1	INDUCTOR RF-CH-MLD 5.6UH +-10% .166D-INX	99800	1537-30
A10A7L4	91100-1618	1	1	INDUCTOR RF-CH-ML0 5.6UH +-10% .166D-INX	99800	1537-30
A10A7MP1				YOT ASSIGNED		
A10A7MP2	2'190-0124	4	1	LOCK WASHER .195 IO	28480	2190-0124
A10A7MP3	2'200-0101	0	2	SCREW-MACH 4-40 .188-IN-LG PAN-HD-POZI	77250	
A10A7MP4	2'950-0078	9	1	YUT-HEX-OBL-CHAM 10-32-THD .067-IN-THK	74163	500220
A10A7MP5	8151-0013	4	1	JIRE 22AWG 1X22	92194	298
A10A7MP6	a15660-20058	2	1	COVER PC, PLL 2 DIVIDER	28480	85660-20058
A10A7MP7	86701-40001	9	2	EXTRACTOR PC	28480	86701-40001
A10A7Q1	1854-0345	8	1	TRANSISTOR NPN 2N5179 SI TO-72 PD=200MW	04713	2N5179
A10A7Q2	1854-0019	3	1	TRANSISTOR NPN SI TO-18 PD=360MW	04713	
A10A7R1	0757-0276	7	1	RESISTOR 61.9 +-1% .125W TF TC=O+-100	19701	SFR25H
A10A7R2	0757-0279	0	1	RESISTOR 3.16K +-1% .125W TF TC=O+-100	19701	SFR25H
A10A7R3	0757-0280	3	1	RESISTOR 1K +-1% .125W TF TC=O+-100	19701	SFR25H
A10A7R4	0757-0395	1	1	RESISTOR 56.2 +-1% .125W TF TC=O+-100	19701	SFR25H
A10A7R5	0757-0401	0	1	RESISTOR 100 +-1% .125W TF TC=O+-100	19701	SFR25H
A10A7R6	0757-0280	3	1	RESISTOR 1K +-1% .125W TF TC=O+-100	19701	SFR25H
A10A7R7	0698-3444	1	1	RESISTOR 316 1% .125W TF TC=O+-100	19701	SFR25H
A10A7R8	0698-3157	3	1	RESISTOR 19.6K 1% .125W TF TC=O+-100	19701	SFR25H
A10A7R9	0757-0280	3	1	RESISTOR 1K +-1% .125W TF TC=O+-100	19701	SFR25H
A10A7R10	0757-0280	3	1	RESISTOR 1K +-1% .125W TF TC=O+-100	19701	SFR25H
A10A7R11	0757-0280	3	1	RESISTOR 1K +-1% .125W TF TC=O+-100	19701	SFR25H

**Indicates factory-selected value*

HP Part Number 85660-60028

A10A7 PLL 2 Divider

Reference Designation	HP Part Number	CD	Qty	Description	Mfr Code	Mfr Part Number
A10A7R12	0757-0280	3	1	RESISTOR 1K +-1% .125W TF TC=O+-100	19701	SFR25H
A10A7R13	0757-0280	3	1	RESISTOR 1K +-1% .125W TF TC=O+-100	19701	SFR25H
A10A7R14	0757-0442	9	1	RESISTOR 10K +-1% .125W TF TC=O+-100	19701	SFR25H
A10A7TP1	1251-0600	0	1	CONNECTOR-SGL CONT PIN 1.14-MM-BSC-SZ SQ	27264	16-06-0034
A10A7TP2	1251-0600	0	1	CONNECTOR-SGL CONT PIN 1.14-MM-BSC-SZ SQ	27264	16-06-0034
A10A7TP3	1251-0600	0	1	CONNECTOR-SGL CONT PIN 1.14-MM-BSC-SZ SQ	27264	16-06-0034
A10A7TP4	1251-0600	0	1	CONNECTOR-SGL CONT PIN 1.14-MM-BSC-SZ SQ	27264	16-06-0034
A10A7TP5	1251-0600	0	1	CONNECTOR-SGL CONT PIN 1.14-MM-BSC-SZ SQ	27264	16-06-0034
A10A7U1	1820-1888	5	1	IC PRESCR ECL	04713	MC12013L
A10A7U2	1820-0681	4	1	IC GATE TTL S NAND QUAD 2-INP	01295	SN74S00N
A10A7U3	1820-0629	0	1	IC FF TTL S J-K NEG-EDGE-TRIG PRESET/CLE	01295	SN74S112N
A10A7U4	1820-1251	6	1	IC CNTR TTL LS DECD ASYNCHRO NEG-EDGE-TR	01295	SN74LS196N
A10A7U5	1820-0909	9	1	IC MULTR TTL	01295	SN74167N
A10A7U6	1820-0909	9	1	IC MULTR TTL	01295	SN74167N
A10A7U7	1820-1251	6	1	IC CNTR TTL LS OECD ASYNCHRO NEG-EDGE-TR	01295	SN74LS196N
A10A7U8	1820-1251	6	1	IC CNTR TTL LS DECD ASYNCHRO NEG-EDGE-TR	01295	SN74LS196N
A10A7U9	1820-0686	9	1	IC GATE TTL S AND TPL 3-INP	01295	SN74S11N
A10A7U10	1820-0629	0	1	IC FF TTL S J-K NEG-EDGE-TRIG PRESET/CLE	01295	SN74S112N
A10A7U11	1820-0261	6	1	IC MV TTL MONOSTBL	01295	SN74121N
A10A7U12	1820-1196	8	1	IC FF TTL LS O-TYPE POS-EDGE-TRIG COM CL	01295	SN74LS174N
A10A7U13	1820-1196	8	1	IC FF TTL LS D-TYPE PDS-EDGE-TRIG COM CL	01295	SN74LS174N
A10A7U14	1820-1196	8	1	IC FF TTL LS D-TYPE POS-EDGE-TRIG COM CL	01295	SN74LS174N
A10A7U15	1820-1251	6	1	IC CNTR TTL LS DECD ASYNCHRO NEG-EDGE-TR	01295	SN74LS196N
A10A7U16	1820-1251	6	1	IC CNTR TTL LS DECD ASYNCHRO NEG-EDGE-TR	01295	SN74LS196N
A10A7W1	85660-60087	1	1	CABLE ASSEMBLY, WHITE/BLUE (INCLUDES J1)	28480	85660-60087

**Indicates factory-selected value*

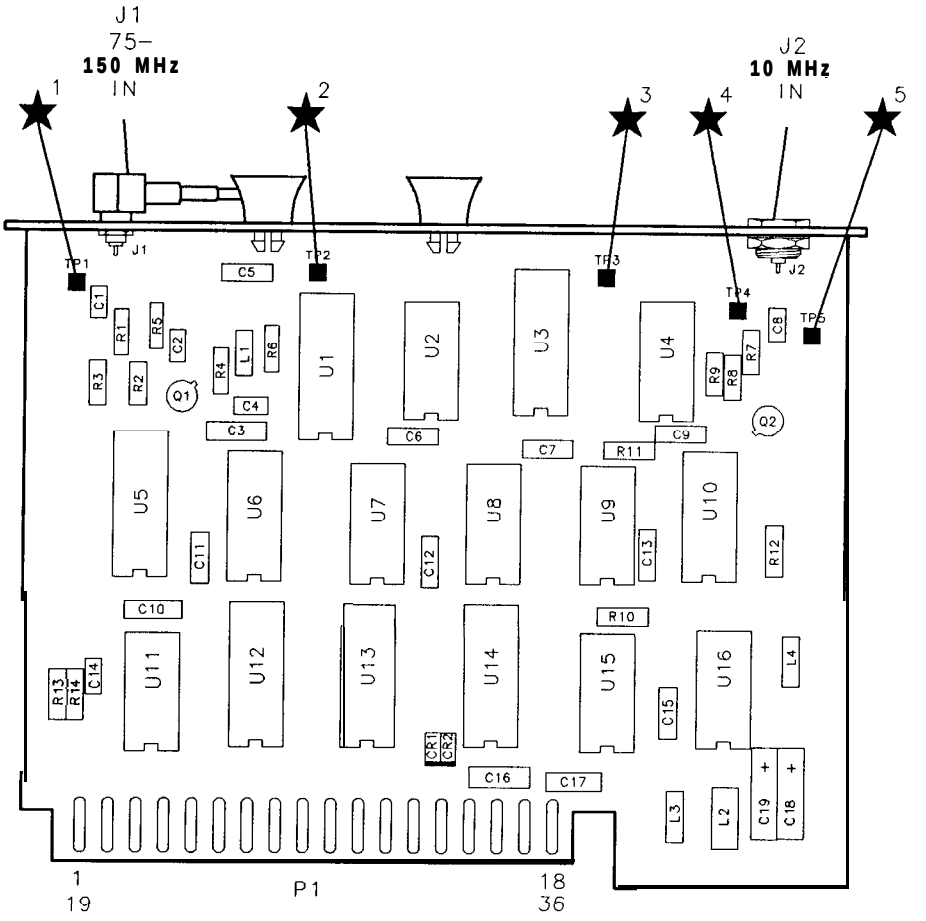

A10A7 PLL2 Divider Component Locations, 85660-60028

A10A7 PHASE LOCK LOOP 2 (PLL2) DIVIDER
85660-60028
(SERIAL PREFIX:2410A)

P1

PIN	SIGNAL	TO/FROM	FUNCTION BLOCK
1	LCK2	A12P3-30	C
19	LCK1	A12P3-29	C
2	HLE2	A12P3-28	A
20	GND		H
3	10B1	A15P2-23	C
21	10B9	A15P2-5	C
4	10B3	A15P2-24	C
22	10B2	A15P2-6	C
5	10B5	A15P2-25	C
23	10B4	A15P2-7	C
6	10B7	A15P2-26	C
24	10B6	A15P2-8	C
7	10B9	A15P2-27	C
25	10B8	A15P2-9	C
8	10B11	A15P2-28	C
26	10B10	A15P2-10	C
9	500 KHZ	A10A6P1-20	A
27	DIVIDED OUTPUT	A10A6P1-19	F
10	GND		NC
28	GND		H
11	NC		
29	NC		
12	NC		
30	NC		
13	NC		
31	NC		
14	SW2	A10ASP1-22	C
32	SW1	A10A1P1-23 A10ASP1-24	C
15	-10V		NC
33	-10V		NC
16	+20V		NC
34	+20V		NC
17	GND		H
35	GND		H
18	+5.2V		H
36	+5.2V		H

Ⓗ POWER SUPPLIES

Ⓐ REFERENCE DIVIDER

Ⓑ PRESCALER

Ⓒ LATCHES

Ⓓ SYNCHRONIZER

Ⓕ DIRECT DIVIDE

Ⓔ INTEGER COUNTER

Ⓖ FRACTIONAL COUNTER

NOTES:

1. REFERENCE DESIGNATORS WITHIN [ ] BRACKETS ARE ABBREVIATED REFERENCE DESIGNATIONS. FOR INFORMATION, PREFIX ABBREVIATION WITH ASSEMBLY DESIGNATION.
2. UNLESS OTHERWISE INDICATED: RESISTANCE IS IN OHMS (Ω) CAPACITANCE IS IN MICROFARADS(μF) INDUCTANCE IS IN MICROHENRIES(μH)
3. UNLESS OTHERWISE INDICATED: SIGNALS ENTER AT LEFT SIDE AND EXIT AT RIGHT SIDE OF FUNCTION BLOCKS.
4. MNEMONIC TABLE:

MNEMONIC	DESCRIPTION
10B6-11	INSTRUMENT BUS DATA BITS 6 THRU 11
LCK1	LOW=CLOCK1
LCK2	LOW=CLOCK2
SW1	SWITCH1
SW2	SWITCH2
HLE2	HIGH=PHASE LOCK LOOP 2 LOCK ENABLE
PSW	PULSE SWALLOW
RST	500kHz RESET
CLK	DIVIDER CLOCK

A10A7

A10A8

A10A8 Phase Lock Loop 2 (PLL2) Discriminator, Circuit Description

The A10A8 PLL2 Discriminator combines the error voltage information from the A10A6 PLL2 Phase Detector, the attenuated scan information (SCAN DAC IN) from the Al6 Scan Generator, and the tuning information from the Al2 Front-Panel Interface (via the Instrument Bus) to produce a tuning current to tune the oscillator in the A10A5 PLL2 VCO.

Pulse Generator Ⓐ

A10A5 PLL2 VCO provides an ECL level .15 to .30 MHz input which is amplified by Q6 and Q7. At the beginning of a cycle, both inputs of gate U7D are low. When Q7 collector goes high, U7D output goes low, saturating Q11 and causing resonator L4, C15, Cl6 to ring at 5.2 MHz. This damped oscillation appears at Q9 collector, is clipped by Q10, and used to drive counter U6. U6 is preset to a count of 6. When the count reaches 8, the (8) output of U6 goes high. This is fed back to the other input of U7D, holding its output low after the input from Q7 goes low. After 1.6 μs, the count reaches 16, (8) goes low again, U7D output goes high, Q11 is turned off, resulting in the resonance being damped by R17. At the count of 16, U7C and U7B reset the counter to 5. Before the oscillation is fully damped, the counter gets clocked to 6. U7A prevents a latch-up condition by clearing the counter in the event that the output of U7D remains low for a long period of time.

−7 V Reference Supply Ⓒ

U13 biases reference diode VR1 at 7.5 mA, and provides a low impedance source at -7.0 V ±2%

Current Source Ⓑ

The -7 V source, via R6 and Q3A, provides current which develops a stable 7 V drop across R7 and Q3B. This acts as the reference for a 3.2 mA current source comprised of U4 and Q4. This current flows to ground through Q5A when the (8) output of U6 is low. If an input pulse has triggered the pulse generator, the current is switched through Q5B for 1.6 μs. Q5B's collector current goes through a low-pass filter to the summing point of the discriminator loop. The average value of this current is directly proportional to the input frequency, being 1.5 mA at 300 kHz. The current to frequency ratio is adjustable ±1% by the phase lock input on PI-28.

Summing Amplifier Ⓕ

U3 is a noninverting integrator which responds to the voltage at the loop summing point, the junction of C22 and R43. The output of U3 is connected through R45 to the output summing network, whose output tunes the A10A5 PLL2 VCO. Non-zero voltages at the loop summing point will therefore cause the VCO frequency to change, until the current from the discriminator reaches a level which cancels the other input, returning the summing point voltage to zero. In this way, the VCO frequency is forced to be exactly proportional to the net current fed to the summing point.

Pretune Ⓓ

The pretune circuit tunes the discriminator loop approximately to the desired frequency. The phase lock loop then applies small corrections to get the frequency exact. A 10-bit binary word representing the pretune frequency is latched by U9 and U12. The data programs DAC U11, whose output goes to U10. If the input is all zeros, the output of U10 is zero. The pretune current is then that which flows through R40: -1.5 mA. This tunes the input frequency to 300 kHz. A binary word representing decimal 1000 will result in +6.84 V at U10's output, adding +0.5 mA to the summing point. The resulting -1.0 mA tunes the loop to 200 kHz.

Scan Attenuator Ⓔ

The attenuated scan ramp is fed to the loop summing point via the range resistors selected by analog switches U1A and U1D. If U1D is closed, a +10 V ramp causes a 0.5 MHz span (referred to the 15 to 30 MHz VCO output). U1A closed results in a 5 MHz span. U1B is closed when U1A is, feeding a current to the summing point which compensates for drift and nonlinearity in U1A.

U2A and U2B direct the scan ramp directly to the VCO. This "forward feed" helps compensate for the rather slow response of the discriminator loop.

U2C and U2D perform a logic function: U2-10 HI, U2-15 LO for wide scans; U2-10 LO, U2-15 HI for narrow scans, and both HI for scan disabled.

Output Current Source Ⓖ

Q1 and Q2 form a low-noise current summing point for error signals from U3 and forward feed from the scan and phase lock inputs. The output current goes to the A10A5 PLL2 VCO.

HP Part Number 85660-60176

A10A8 PLL 2 Discriminator

Reference Designation	HP Part Number	C D	Qty	Description	Mfr Code	Mfr Part Number
A10A8	85660-60176	9	1	BOARD ASSEMBLY, PLL2 DISCRIMINATOR	28480	85660-60176
A10A8C1	0160-4084	8	1	CAP-FXD 0.1uF 50 V	56289	1C20X7R104M050B
A10A8C2	0160-4084	8	1	CAP-FXD 0.1uF 50 V	56289	1C20X7R104M050B
A10A8C3	0160-4084	8	1	CAP-FXD 0.1uF 50 V	56289	1C20X7R104M050B
A10A8C4	0180-0291	3	1	CAPACITOR-FXD 1UF+-10% 35VDC TA	56289	150D105X9035A2-DYS
A10A8C5	0180-0197	8	1	CAPACITOR-FXD 2.2UF+-10% 20VDC TA	56289	150D225X9020A2-DYS
A10A8C6	0180-0197	8	1	CAPACITOR-FXD 2.2UF+-10% 20VDC TA	56289	150D225X9020A2-DYS
A10A8C7	0160-4084	8	1	CAP-FXD 0.1uF 50 V	56289	1C20X7R104M050B
A10A8C8	0180-0229	7	1	CAP-FXD 33uF 10 V TA	56289	150D336X9010B2-DYS
A10A8C9	0160-3879	7	1	CAPACITOR-FXD .01UF +-20% 100VDC CER	04222	SR201C103MAAH
A10A8C10	0160-2199	2	1	CAPACITOR-FXD 30PF +-5% 300VDC MICA	09023	CD15ED300J03
A10A8C11	0160-4084	8	1	CAP-FXD 0.1uF 50 V	56289	1C20X7R104M050B
A10A8C12	0160-0571	0	1	CAPACITOR-FXD 470PF +-20% 100VDC CER	04222	SR201C471MAAH
A10A8C13	0160-4892	6	1	CAP-FXD 1uF 25 V	56289	2C37Z5U105M025C
A10A8C14	0160-4084	8	1	CAP-FXD 0.1uF 50 V	56289	1C20X7R104M050B
A10A8C15	0160-4605	9	1	CAP-FXD 36pF 500 V		302-000-C0G0-360G
A10A8C16	0160-2252	8	1	CAP-FXD 6.2pF 500 V	52763	
A10A8C17	0160-3877	5	1	CAPACITOR-FXD 100PF +-20% 200VDC CER	04222	SR202C101MAAH
A10A8C18	0160-4084	8	1	CAP-FXO 0.1uF 50 V	56289	1C20X7R104M050B
A10A8C19	0160-4084	8	1	CAP-FXD 0.1uF 50 V	56289	1C20X7R104M050B
A10A8C20	0160-3879	7	1	CAPACITOR-FXD .01UF +-20% 100VDC CER	04222	SR201C103MAAH
A10A8C21	0160-4084	8	1	CAP-FXD 0.1uF 50 V	56289	1C20X7R104M050B
A10A8C22	0160-3879	7	1	CAPACITOR-FXD .01UF +-20% 100VDC CER	04222	SR201C103MAAH
A10A8C23	0160-0161	4	1	CAPACITOR-FXD .01UF +-10% 200VDC POLYE	84411	HEW-238M
A10A8C24	0160-4084	8	1	CAP-FXD 0.1uF 50 V	56289	1C20X7R104M050B
A10A8C25	0160-3456	6	1	CAPACITOR-FXD 1000PF +-10% 1KVDC CER		808-542 X5E 102K
A10A8C26	0160-2199	2	1	CAPACITOR-FXD 30PF +-5% 300VDC MICA	09023	CD15ED300J03
A10A8C27	0160-3877	5	1	CAPACITOR-FXD 100PF +-20% 200VDC CER	04222	SR202C101MAAH
A10A8C28	0160-4892	6	1	CAP-FXD 1uF 25 V	56289	2C37Z5U105M025C
A10A8C29	0160-2437	1	1	CAPACITOR-FDTHRU 5000PF +80 -20% 200V	33095	54-713-033-X5V-502Z
A10A8CR1	1901-0539	3	1	DIODE-SCHOTTKY SM SIG		
A10A8CR2	1901-0539	3	1	DIODE-SCHOTTKY SM SIG		
A10A8J2	1250-0544	9	1	CONNECTOR-RF SM-SNP M SGL-HOLE-FR 50-OHM	98291	051-049-0000-220
A10A8L1	9140-0144	0	1	INDUCTOR RF-CH-MLD 4.7UH +-10% .105D-INX	99800	1025-36
A10A8L2	9140-0144	0	1	INDUCTOR RF-CH-MLD 4.7UH +-10% .105D-INX	99800	1025-36
A10A8L3	9140-0144	0	1	INDUCTOR RF-CH-MLD 4.7UH +-10% .105D-INX	99800	1025-36
A10A8L4	9140-0392	0	1	INDUCTOR RF-CH-MLD 22UH +-3% .166D-INX.3	24226	15M222H
A10A8L5	9100-1629	4	1	INDUCTOR RF-CH-MLD 47UH +-5% .166D-INX.3	99800	1537-60
A10A8L6	9100-1666	9	1	INDUCTOR RF-CH-MLD 3.6MH +-5% .23D-INX.5	99800	2500-54
A10A8L7	9140-0144	0	1	INDUCTOR RF-CH-MLD 4.7UH +-10% .105D-INX	99800	1025-36
A10A8MP1				NOT ASSIGNED		
A10A8MP2	0360-0270	0	1	TERMINAL-SLDR LUG LK-MTG FOR-X10-SCR	79963	807-196
A10A8MP3	0890-0324	8	1	TUBING-FLEX .032-ID TFE .012-WALL	09795	II-TW,FR-1
A10A8MP4	1205-0250	9	1	THERMAL LINK SGL TO-5/TO-39-CS	05820	2604 TH 5E
A10A8MP5	2190-0009	4	1	WASHER-LK INTL T NO. 8 .168-IN-ID	06791	820-BC
A10A8MP6	2190-0124	4	1	WASHER-LK INTL T NO. 10 .195-IN-ID	98291	3002-26
A10A8MP7	2200-0101	0	5	SCREW-MACH 4-40 .188-IN-LG PAN-HD-POZI	77250	

**Indicates factory-selected value*

HP Part Number 85660-60176

A10A8 PLL 2 Discriminator

Reference Designation	HP Part Number	C D	Qty	Description	Mfr Code	Mfr Part Number
A10A8MP8	2200-0164		1	SCREW-MACH 4-40 .188-IN-LG UNCT 82 DEG	7725C	
A10A8MP9	2580-0002		1	NUT-HEX-DEL-CHAM 8-32-THD .085-IN-THK	8012C	
A10A8MP10	2950-0078		1	NUT-HEX-DBL-CHAM 10-32-THD .067-IN-THK	74163	500220
A10A8MP11	3050-0021		1	WASHER-FL NM NO. 8 .188-IN-ID .375-IN-OI	73734	
A10A8MP12	3050-0907		1	WASHER-SHLDR NO. 10 .194-IN-ID	06540	2636-24827-PH194
A10A8MP13	6960-0059		1	PLUG HOLE .187D	28480	6960-0059
A10A8MP14	8151-0013		1	WIRE 22AWG 1X22	92194	298
A10A8MP15	85660-20059		1	COVER PC PLL2 DISCRIMINATOR	28480	85660-20059
A10A8MP16	86701-40001		1	EXTRACTOR PC	28480	86701-40001
A10A8MP17	2190-0124		1	WASHER-LK INTL T NO. 10 .195-IN-ID	98291	3002-26
A10A8MP18	85660-00059		1	SHIELD	28480	85660-00059
A10A8MP19	2740-0001		1	NUT-HEX-DBL-CHAM 10-32-THD .109-IN-THK	73734	
A10A8Q1	1854-0404		1	TRANSISTOR NPN SI TO-18 PD=360MW	04713	
A10A8Q2	1853-0281		1	TRANSISTOR PNP 2N2907A SI TO-18 PD=400MW	04713	2N2907A
A10A8Q3	1854-1030		1	DUAL TRANSISTOR X-N D SD3303 78		
A10A8Q3	1854-0957		0	ALTERNATE PART FOR 1854-1030		
A10A8Q4	1855-0413		1	TRANSISTOR J-FET P-CHAN D-MODE TO-18 SI	17856	
A10A8Q5	1853-0269		1	TRANSISTOR-DUAL PNP 2N3809 PD=600MW	04713	2N3809
A10A8Q6	1853-0007		1	TRANSISTOR PNP 2N3251 SI TO-18 PD=360MW	04713	2N3251
A10A8Q7	1854-0019		1	TRANSISTOR NPN SI TO-18 PD=360MW	04713	
A10A8Q8	1853-0281		1	TRANSISTOR PNP 2N2907A SI TO-18 PD=400MW	04713	2N2907A
A10A8Q9	1854-0247		1	TRANSISTOR NPN SI TO-39 PD=1W FT=800MHZ	04713	
A10A8Q10	1853-0388		1	TRANSISTOR-DUAL PNP TO-78 PD=600MW	04713	
A10A8Q11	1853-0034		1	TRANSISTOR PNP SI TO-18 PD=360MW	04713	
A10A8R1	0757-0346		1	RESISTOR 10 +-1% .125W TF TC=O+-100	91637	CMF-55-1, T-1
A10A8R2	0757-0199		1	RESISTOR 21.5K +-1% .125W TF TC=O+-100	19701	SFR25H
A10A8R3	1757-0123		1	RESISTOR 34.8K +-1% .125W TF TC=O+-100	19701	SFR25H
A10A8R4	0757-0442		1	RESISTOR 10K +-1% .125W TF TC=O+-100	19701	SFR25H
A10A8R5	1698-3132		1	RESISTOR 261 1% .125W TF TC=O+-100	19701	SFR25H
A10A8R6	0699-0078		1	RESISTOR 2.1K +-0.1% .1W TF TC=O+-10	19701	50232
A10A8R7	0699-0078		1	RESISTOR 2.1K +-0.1% .1W TF TC=O+-10	19701	50232
A10A8R8	1699-0078		1	RESISTOR 2.1K +-0.1% .1W TF TC=O+-10	19701	50232
A10A8R9	2100-1739		1	RESISTOR-TRMR 5K 10% WW SIDE-ADJ 20-TRN	32997	3005P-DM3-502
A10A8R10	1699-0082		1	RESISTOR 215 +-0.1% .1W TF TC=O+-10	19701	50232
A10A8R11	0757-0280		1	RESISTOR 1K +-1% .125W TF TC=O+-100	19701	SFR25H
A10A8R12	0757-0280		1	RESISTOR 1K +-1% .125W TF TC=O+-100	19701	SFR25H
A10A8R13	0757-0280		1	RESISTOR 1K +-1% .125W TF TC=O+-100	19701	SFR25H
A10A8R14	0698-3153		1	RESISTOR 3.83K 1% .125W TF TC=O+-100	19701	SFR25H
A10A8R15	0757-0280		1	RESISTOR 1K +-1% .125W TF TC=O+-100	19701	SFR25H
A10A8R16	0698-3151		1	RESISTOR 2.87K 1% .125W TF TC=O+-100	19701	SFR25H
A10A8R17	0757-0280		1	RESISTOR 1K +-1% .125W TF TC=O+-100	19701	SFR25H
A10A8R18	0698-3445		1	RESISTOR 348 1% .125W TF TC=O+-100	19701	SFR25H
A10A8R19	0698-3447		1	RESISTOR 422 1% .125W TF TC=O+-100	19701	SFR25H
A10A8R20	0757-1094		1	RESISTOR 1.47K +-1% .125W TF TC=O+-100	19701	SFR25H
A10A8R21	0698-3444		1	RESISTOR 316 1% .125W TF TC=O+-100	19701	SFR25H
A10A8R22	0757-0280		1	RESISTOR 1K +-1% .125W TF TC=O+-100	19701	SFR25H
A10A8R23	0698-3152		1	RESISTOR 3.48K 1% .125W TF TC=O+-100	19701	SFR25H
A10A8R24	1757-1094		1	RESISTOR 1.47K +-1% .125W TF TC=O+-100	19701	SFR25H

**Indicates factory-selected value*

HP Part Number 85660-60176

A10A8 PLL 2 Discriminator

Reference Designation	HP Part Number	C.	Qty	Description	Mfr Code	Mfr Part Number
A10A8R25	2100-1972	3	1	RESISTOR-TRMR 20K 10% WW SIDE-ADJ PO-TRN	32991	3005P-DM3-203
A10A8R26	0699-0081	8	1	RESISTOR 390K +-0.1% .125W TF TC=O+-10	19701	50332
A10A8R27	2100-2851	C	1	RESISTOR-TRMR 2K 10% WW SIDE-ADJ 20-TRN	32997	3005P-DM3-202
A10A8R28	0699-0080	7	1	RESISTOR 39K +-0.1% .125W TF TC=O+-10	19701	50332
A10A8R29	0698-3499	E	1	RESISTOR 40.2K 1% .125W TF TC=O+-100	19701	SFR25H
A10A8R30	0698-3499	E	1	RESISTOR 40.2K 1% .125W TF TC=O+-100	19701	SFR25H
A10A8R31	0698-3499	6	1	RESISTOR 40.2K 1% .125W TF TC=O+-100	19701	SFR25H
A10A8R32	0698-3153	9	1	RESISTOR 3.83K 1% .125W TF TC=O+-100	19701	SFR25H
A10A8R33	0699-0084	1	1	7ESISTOR 6.19K +-0.1% .1W TF TC=O+-10	19701	50232
A10A8R34	0698-6366	2	1	RESISTOR 800 +-0.1% .125W TF TC=O+-25	19701	5033R
A10A8R35	0757-0400	9	1	RESISTOR 90.9 +-1% .125W TF TC=O+-100	19701	SFR25H
A10A8R36	3698-0083	8	1	RESISTOR 1.96K 1% .125W TF TC=O+-100	19701	SFR25H
A10A8R37	0698-0084	9	1	RESISTOR 2.15K 1% .125W TF TC=O+-100	19701	SFR25H
A10A8R38	1757-0280	3	1	RESISTOR 1K +-1% .125W TF TC=O+-100	19701	SFR25H
A10A8R39	3757-0280	3	1	RESISTOR 1K +-1% .125W TF TC=O+-100	19701	SFR25H
A10A8R40	1699-0079	4	1	RESISTOR 4.667K +-0.1% .1W TF TC=O+-10	19701	50232
A10A8R41	2100-1799	2	1	RESISTOR-TRMR 500 10% WW SIDE-ADJ 20-TRN	32997	3005P-DM3-501
A10A8R42	0698-8831	0	1	RESISTOR 13.4K +-0.1% .125W TF TC=O+-10	19701	50332
A10A8R43	1757-0274	5	1	LESISTOR 1.21K +-1% .125W TF TC=O+-100	19701	SFR25H
A10A8R44	1698-0085	0	1	RESISTOR 2.61K 1% .125W TF TC=O+-100	19701	SFR25H
A10A8R45	0698-3150	6	1	LESISTOR 2.37K 1% .125W TF TC=O+-100	19701	SFR25H
A10A8R46	0757-0280	3	1	RESISTOR 1K +-1% .125W TF TC=O+-100	19701	SFR25H
A10A8R47	0757-0438	3	1	RESISTOR 5.11K +-1% .125W TF TC=O+-100	19701	SFR25H
A10A8R48	0757-0394	D	1	RESISTOR 51.1 +-1% .125W TF TC=O+-100	19701	SFR25H
A10A8R49	1757-0401	3	1	RESISTOR 100 +-1% .125W TF TC=O+-100	19701	SFR25H
A10A8R50	0757-0401	3	1	RESISTOR 100 +-1% .125W TF TC=O+-100	19701	SFR25H
A10A8TP1	1251-0600	0	1	CONNECTOR-SGL CONT PIN 1.14-MM-BSC-SZ SQ	27264	16-06-0034
A10A8TP2	1251-0600	0	1	CONNECTOR-SGL CONT PIN 1.14-MM-BSC-SZ SQ	27264	16-06-0034
A10A8TP3	1251-0600	0	1	CONNECTOR-SGL CONT PIN 1.14-MM-BSC-SZ SQ	27264	16-06-0034
A10A8TP4	1251-0600	0	1	CONNECTOR-SGL CONT PIN 1.14-MM-BSC-SZ SQ	27264	16-06-0034
A10A8TP6	1251-0600	0	1	CONNECTOR-SGL CONT PIN 1.14-MM-BSC-SZ SQ	27264	16-06-0034
A10A8TP7	1251-0600	0	1	CONNECTOR-SGL CONT PIN 1.14-MM-BSC-SZ SQ	27264	16-06-0034
A10A8U1	1826-0811	4	1	ANALOG SWITCH 4 SPST 16 -CERDIP	06665	SW-01FQ
A10A8U1	1826-0582	6	0	ALTERNATE PART FOR 1826-0811		
A10A8U2	1826-0811	4	1	ANALOG SWITCH 4 SPST 16 -CERDIP	06665	SW-01FQ
A10A8U2	1826-0582	6	0	ALTERNATE PART FOR 1826-0811		
A10A8U3	5180-2315	1	1	IC 05C M1 OP AMP	28480	5180-2315
A10A8U3	5180-2314	0	0	ALTERNATE PART FOR 5180-2315		
A10A8U4	1820-0223	0	1	IC OP AMP GP TO-99 PKG	27014	LM301AH
A10A8U5	1820-0429	B	1	IC V RGLTR-FXD-POS 4.8/5.2V TO-39 PKG	27014	LM309H
A10A8U6	1820-1194	6	1	:C CNTR TTL LS BIN UP/DOWN SYNCHRO POS-E	01295	SN74LS193N
A10A8U7	1820-1144	6	1	:C GATE TTL LS NOR QUAD 2-INP	01295	SN74LS02N
A10A8U8	1826-0353	3	1	IC V RGLTR-FXD-POS 14.4/15.6V TO-39 PKG	27014	LM78L15ACH
A10A8U9	820-1196	3	1	C FF TTL LS D-TYPE POS-EDGE-TRIG COM CL	01295	SN74LS174N
A10A8U10	1826-0059	2	1	C OP AMP GP TO-99 PKG	27014	LM201AH
A10A8U11	826-0448	3	1	1/A 10-BIT 16-PLASTIC CMOS	24355	AD7533LN(SEL)
A10A8U12	820-1196	3	1	C FF TTL LS D-TYPE POS-EDGE-TRIG COM CL	01295	SN74LS174N

**Indicates factory-selected value*

HP Part Number 85660-60176

A10A8 PLL 2 Discriminator

Reference Designation	HP Part Number	C D	Qty	Description	Mfr Code	Mfr Part Number
A10A8U13	1820-0223	0	1	IC OP AMP GP TO-99 PKG	27014	LM301AH
A10A8VR1	1902-0686	3	1	DIODE-ZNR 6.2V 2% DO-7 PD=.4W TC=+.002%	04713	1N825
A10A8W1	85660-60086	0	1	CABLE ASSEMBLY, WHITE/VIOLET (INCLUDES J3)	28480	85660-60086
A10A8W2	85660-60071	3	1	CABLE ASSEMBLY, RED (INCLUDES J1)	28480	85660-60071

**Indicates factory-selected value*

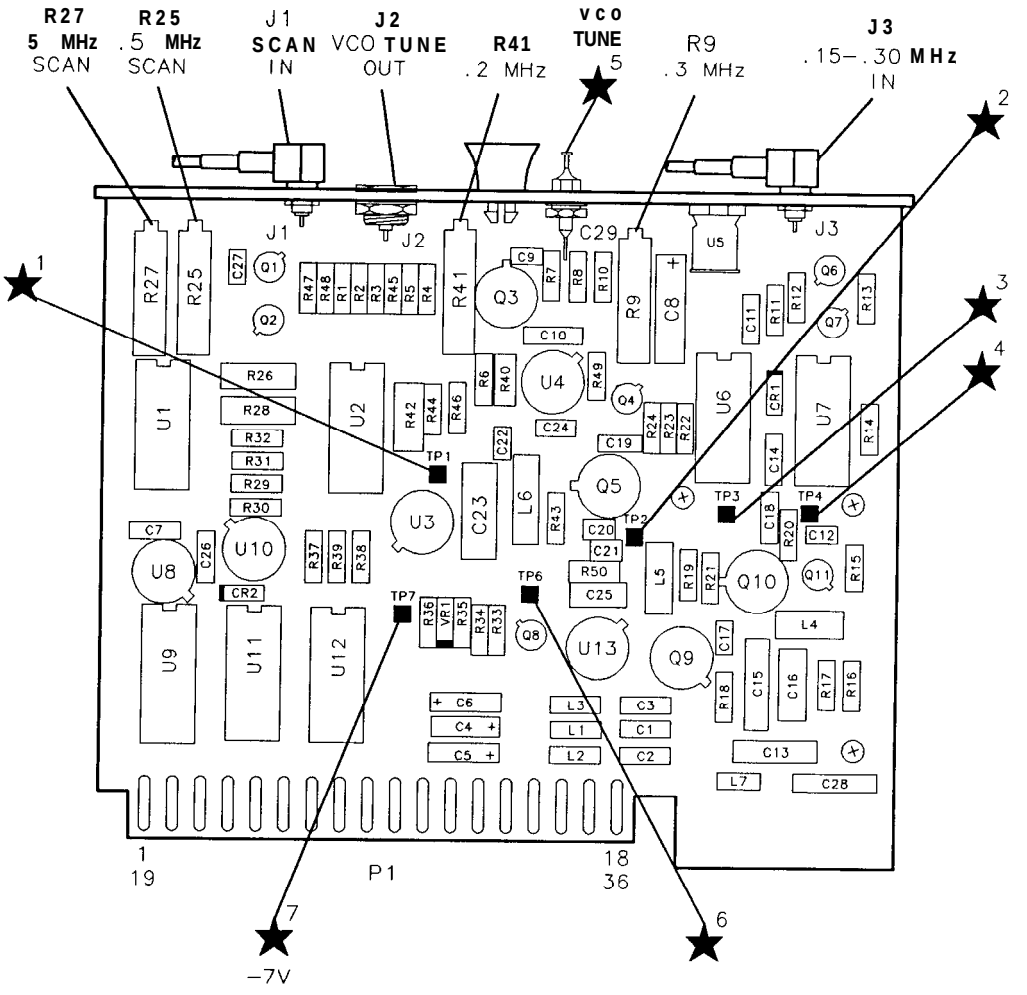

A10A8 PLL2 Discriminator Component Location, 85660-60176

A10A8 PHASE LOCK LOOP 2 (PLL2) DISCRIMINATOR
85660-60176
(SERIAL PREFIX: 2410A)

P1

PIN	SIGNAL	TO/FROM	FUNCTION BLOCK
1	NC		
19	LCK3	A12P3-15	D
2	HLE2		NC
20	NC		
3	10B1	A15P2-23	D
21	10B1β	A15P2-5	D
4	10B3	A15P2-24	D
22	10B2	A15P2-6	D
5	10B5	A15P2-25	D
23	10B4	A15P2-7	D
6	10B7	A15P2-26	D
24	10B6	A15P2-8	D
7	10B9	A15P2-27	D
25	10B8	A15P2-9	D
8	10B11	A15P2-28	D
26	10B1β	A15P2-10	D
9	-7V	A10A6P1-7	C
27	GND		NC
10	SCAN GND	A10A6P1-8	C
28	TUNING VOLTAGE	A10A6P1-23	B
11	GND		H
29	NC		
12	GND		H
30	NC		
13	GND		H
31	NC		
14	GND		H
32	NC		
15	-10V		H
33	-10V		H
16	+20V		H
34	+20V		H
17	GND		H
35	GND		NC
18	+5.2V		H
36	+5.2V		H

Ⓐ PULSE GENERATOR

Ⓑ CURRENT SOURCE

Ⓒ SCAN ATTENUATOR

Ⓒ -7V SUPPLY

Ⓓ PRETUNE

Ⓕ SUMMING AMPLIFIER

Ⓖ OUTPUT CURRENT SOURCE

Ⓗ POWER SUPPLIES

15-30 MHz IN 0.8V P-P ± 0.2V FROM A10A5 PLL2 VCO

P1-28 TUNING VOLTAGE

SCAN IN 0 TO +10V FROM A16 SCAN GENERATOR

.150Vdc AT 300kHz
.100Vdc AT 200kHz

DISCRIMINATOR OFFSET 1mA/200kHz

FINE TUNE SIGNAL (FIXED DURING SWEEP)

SUMMING NODE (=0Vdc)

PRETUNE OFFSET ~1mA/200kHz

CABLE 83, A10A8W1 VCO TUNE OUT 1 TO 9 MA TO A10A5 PLL2 VCO

NOTES:

1. REFERENCE DESIGNATORS WITHIN THIS ASSEMBLY ARE ABBREVIATED. FOR COMPLETE REFERENCE DESIGNATION,PREFIX ABBREVIATION WITH ASSEMBLY DESIGNATION.
2. UNLESS OTHERWISE INDICATED: RESISTANCE IS IN OHMS, CAPACITANCE IS IN MICROFARADS(μF) INDUCTANCE IS IN MICRONENRIES(μH)
3. UNLESS OTHERWISE INDICATED: SIGNALS ENTER AT LEFT SIDE AND EXIT AT RIGHT SIDE OF FUNCTION BLOCKS.
4. MNEMONICS TABLE:

MNEMONIC	DESCRIPTION
10B8-11	INSTRUMENT BUS DATA BITS 8 THRU 11
LCK3	LOW=CLOCK3
HLE2	HIGH=PHASE LOCK LOOP 2 LOCK ENABLE

A10A8

A11

YTO Loop and A11A3 YTO Replacement

Note For location of hardware and cables referred to in this procedure, see Figure 1.

With the ac line cords and RF Section bottom cover removed, proceed as follows:

1. Disconnect connector ① from A11A1 (Coupler/Isolator/Amplifier) ②. Refer to view A.
2. Remove the following cables from All YTO Loop. Refer to view A.
   - 8 (gray) (A11J1, DET OUT) ⑤
   - 5 (green) (AllJ3, 20/30 IN) ⑥
   - 93 (white/orange) (AllJ2, M/N IN) ⑦
   - 0 (black) (AllJ4, IF IN) ⑨
3. Release YTO Loop from RF Section by removing three screws ③ as shown in view A.
4. Partially slide YTO Loop out from RF Section. Reach behind YTO Loop and disconnect cable ①⓪ from motherboard connector. Note position of cable. Refer to view B.
5. Remove All YTO Loop from RF Section.
6. To replace A11A3 YTO (2.0 to 6.2 GHz OSCILLATOR), proceed as follows.
   a. Disconnect connector ①① from A11A3 YTO ①②. Disconnect cable ①③ from YTO connector ⑧. Refer to view B.
   b. To remove YTO, remove two screws ④ as shown in view A.
   c. When installing the new YTO, reconnect connector ①① before tightening screws ④.
   d. Reconnect cable ①③ to YTO connector ⑧. Refer to view B.
7. When installing All YTO Loop in RF Section, reconnect cable ①⓪ to motherboard before completely sliding All into RF Section. Refer to view B.
8. Secure YTO Loop to RF Section with screws ③ as shown in view A.
9. Reconnect cables and connectors to YTO Loop as removed in steps 1 and 2.
10. Replace bottom cover and ac line cords.

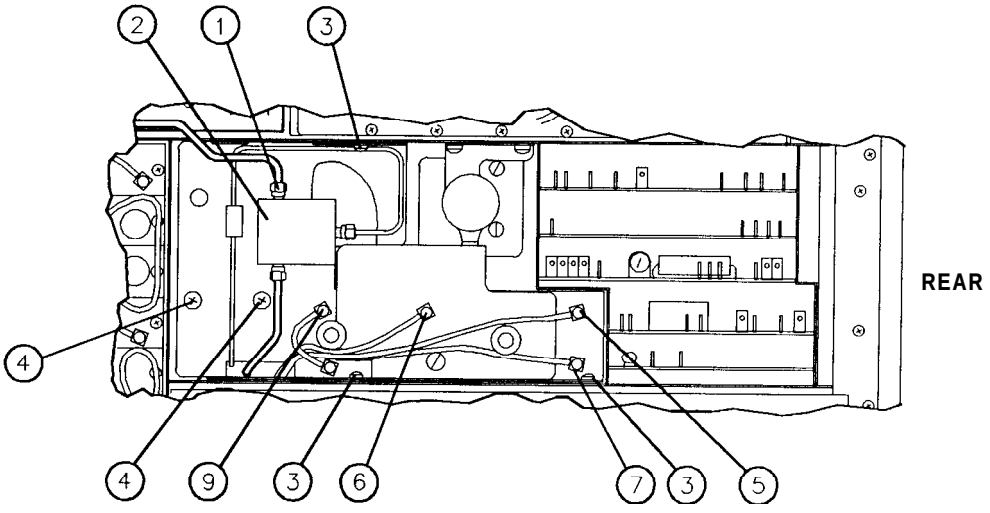

VIEW A

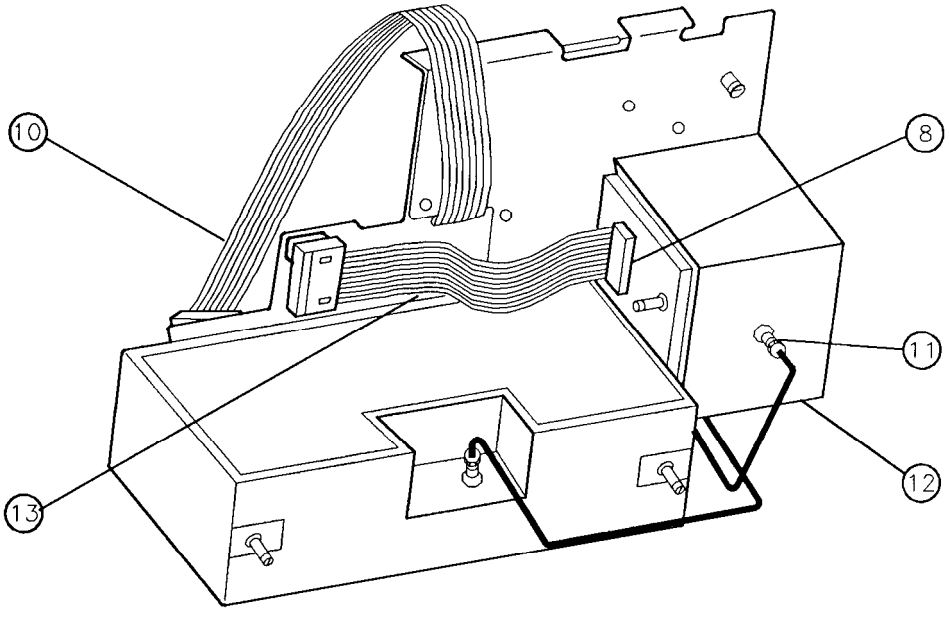

VIEW B

Figure 1. Ail YTO Loop and **A11A3** YTO Replacement

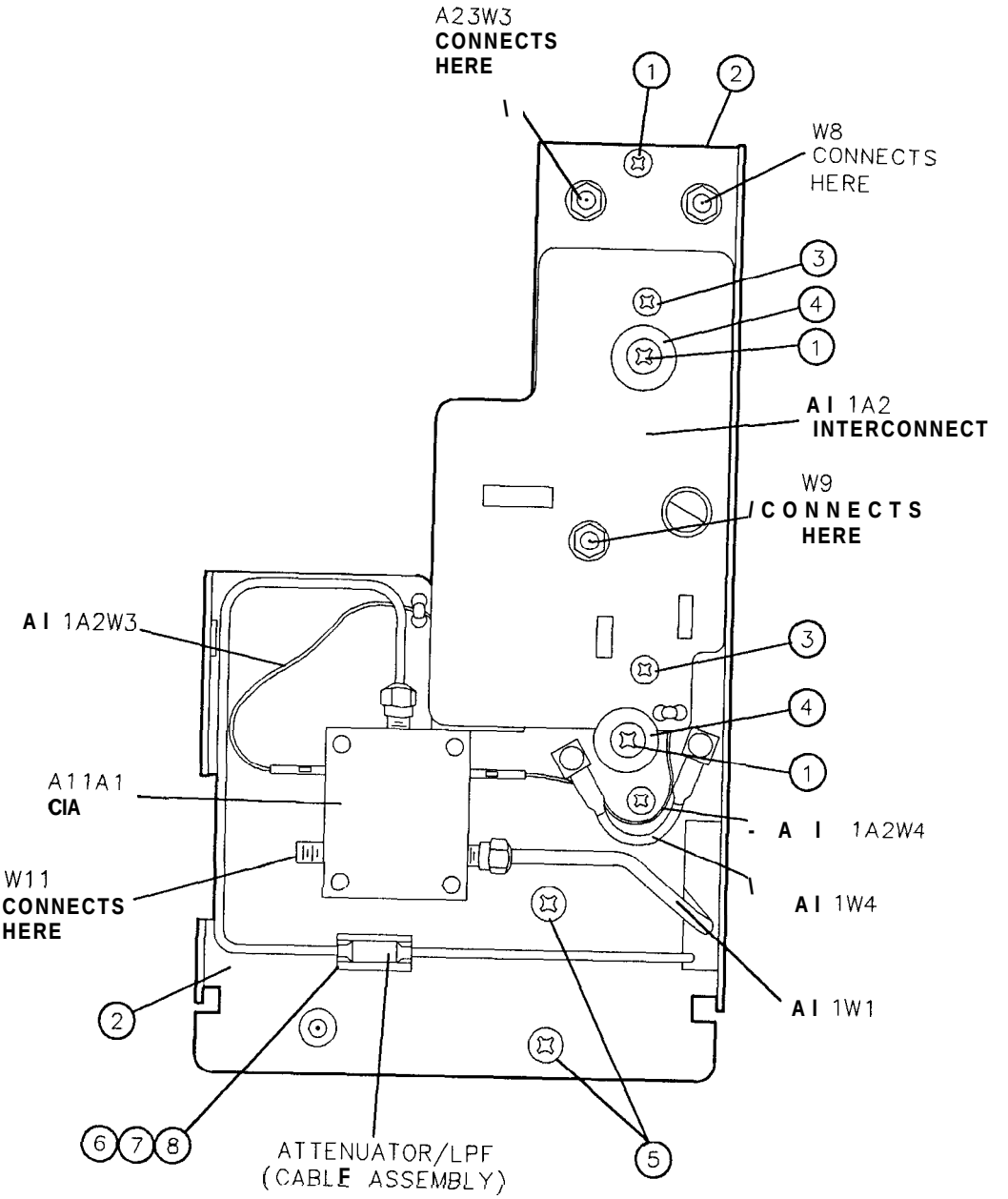

Figure 2. All YTO Loop Assembly, Parts Identification (1 of 4)

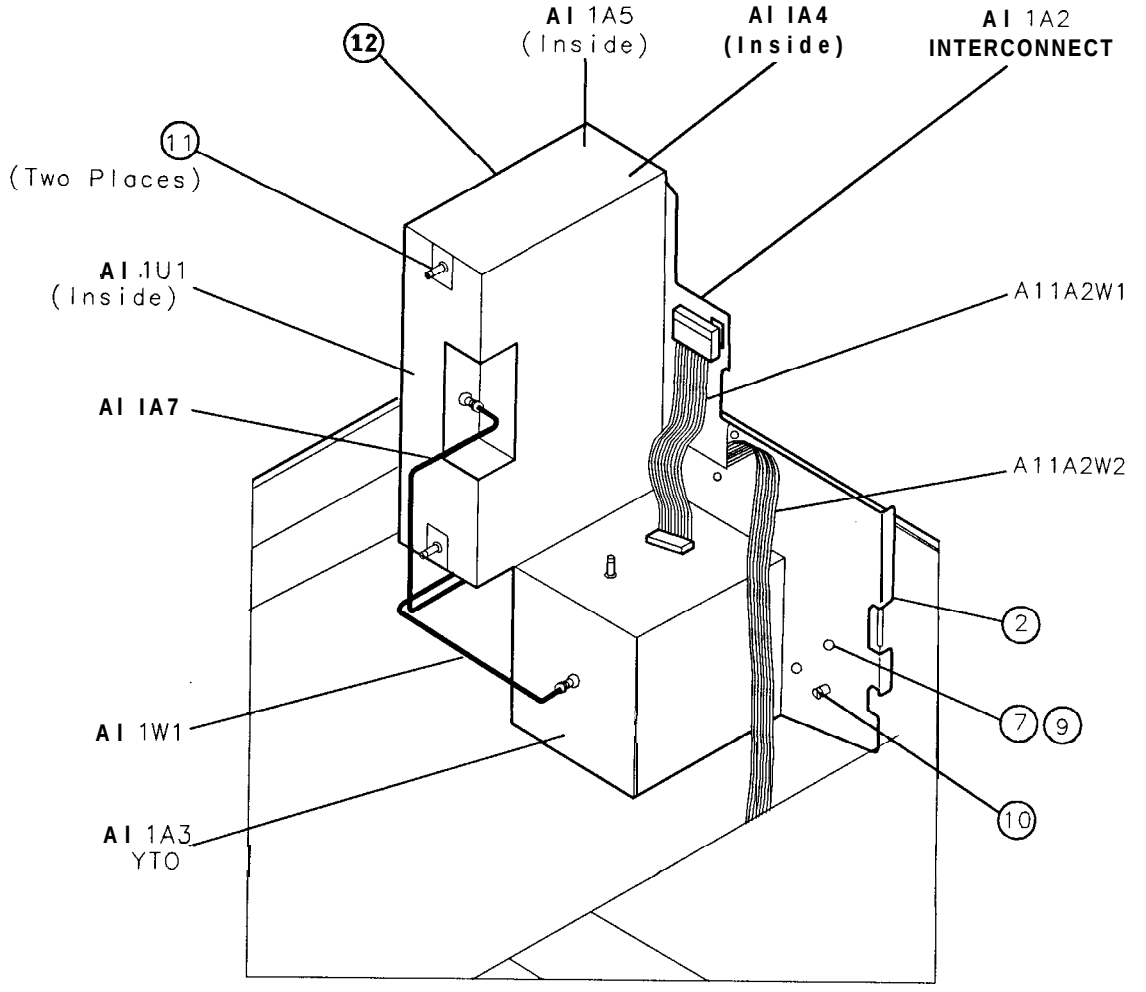

Figure 2. All YTO Loop Assembly, Parts Identification (2 of 4)

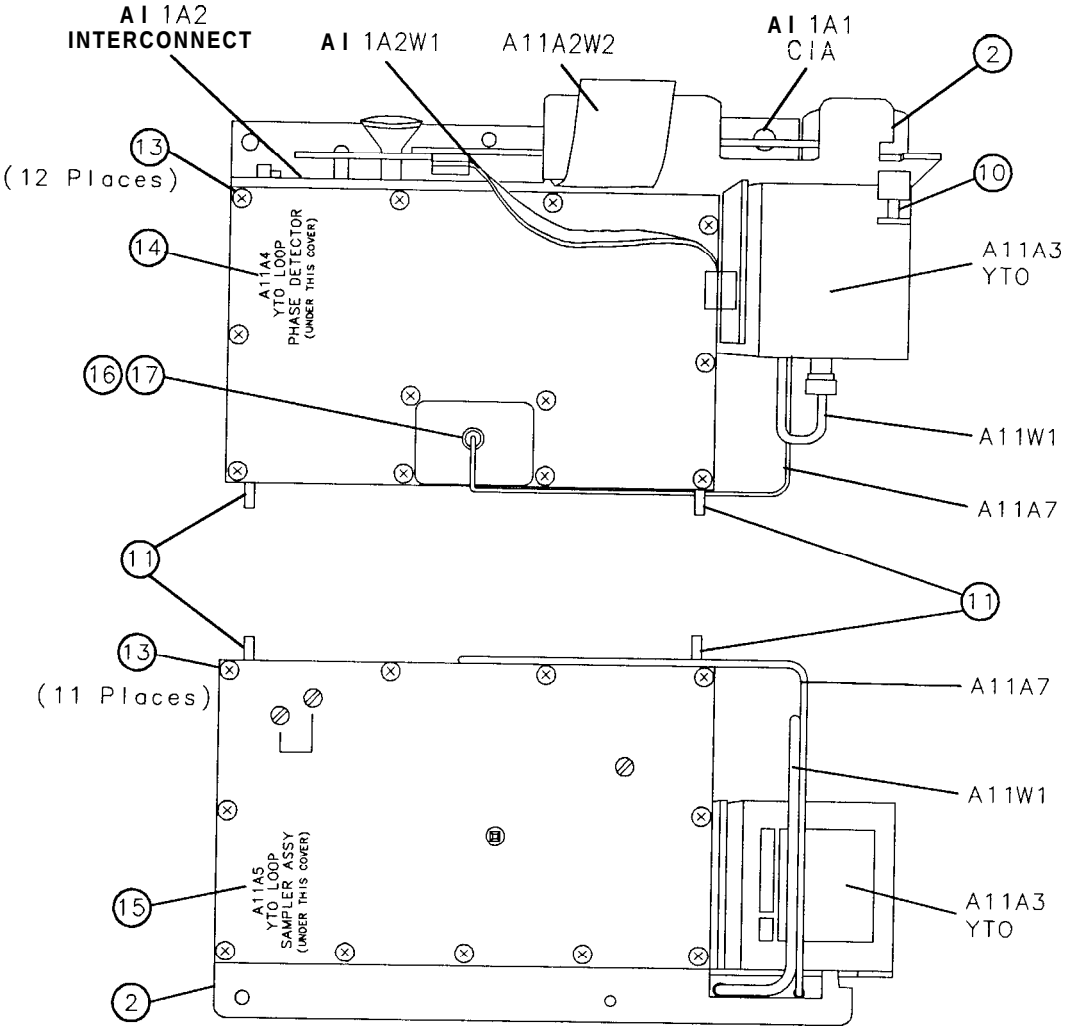

Figure 2. Al 1 YTO Loop Assembly, Parts Identification (3 of 4)

Item	HP Part Number	CD	Description	Mfr Code	Mfr Part Number
1	2360-0331	6	SCREW, MACH, 6-32, .25-IN LG, PAN HD	28480	2360-0331
2	85660-00024	0	DECK, YTO LOOP ASSEMBLY	28480	85660-0002
3	2200-0103	2	SCREW, MACH, 4-40, .25-IN LG, PAN HD	28480	85660-2010
4	85660-20100	5	EXTRACTOR, YTO LOOP ASSEMBLY	28480	2360-0333
5	2360-0333	8	SCREW, MACH, 6-32, .25-IN LG, FLAT HD	28480	2360-0333
6	0520-0127	6	SCREW, MACH, 2-56, .188-IN LG, PAN HD	28480	0520-0127
7	2190-0890	1	WASHER, LOCK, 2-56 (FOR SCREWS (6) & (9))	28480	2190-0890
8	1400-0970	4	CLIP, COMPONENT (FOR A11A7 LPF)	28480	1400-0970
9	0520-0129	8	SCREW, MACH, 2-56, .312-IN LG, PAN HD	28480	0520-0129
10	1390-0284	0	CAP SCREW ASSEMBLY	28480	1390-0284
11	85660-20088	8	STUD, YTO LOOP ASSEMBLY	28480	85660-2008
12	86701-20009	5	HOUSING, YTO LOOP ASSEMBLY	28480	86701-2000
13	2200-0165	6	SCREW, MACH, 4-40, .25-IN LG, FLAT HD	28480	2200-0165
14	85660-00035	3	COVER, HOUSING (A11A4 YTO ϕ DET)	28480	85660-0003
15	85660-00034	2	COVER, HOUSING (A11A5 SAMPLER)	28480	85660-0003
16	1250-1143	6	NUT, HEX, RF CONNECTOR	28480	1250-1143
17	1250-1142	5	WASHER, LOCK, RF CONNECTOR	28480	1250-1142

Figure 2. All YTO Loop Assembly, Parts Identification (4 of 4)

Reference Designato	HP Part Number	CD	Qty	Description	Mfr Code	Mfr Part Number
A11A1	5086-7295	6	1	COUPLER/ISOLATOR/AMPLIFIER (CIA)	28480	5086-7295
A11A2	85660-6012:	6	1	BOARD ASSEMBLY, INTERCONNECT, YTO LOOP (MUST BE USED WITH A11A3 5086-7314)	28480	85660-6012:
A11A3	5086-7314	0	1	YIG-TUNED OSCILLATOR (YTO) (NEW)	28480	5086-7314
A11A3	5086-6314	8	1	YIG-TUNED OSCILLATOR (YTO)	28480	5086-6314
A11A4	85660-6017:	8	1	BOARD ASSEMBLY, YIG-TUNED OSCILLATOR (YTO) DETECTOR	28480	85660-6017:
A11A5	85660-6019:	6	1	BOARD ASSEMBLY, SAMPLER	28480	85660-6019:
A11A7	9135-0187	0	1	CABLE ASSEMBLY, LOW PASS FILTER, 6.2 GHZ	28480	9135-0187
A11C1	0160-3036	8	6	CAPACITOR-FDTHRU 500 PF +80 −20% 200 V	28480	0160-3036
A11C2	0160-3036	8		CAPACITOR-FDTHRU 500 PF +80 −20% 200 V	28480	0160-3036
A11C3	0160-4748	1	3	CAPACITOR-FDTHRU 100 PF 20% 200 V CER	28480	0160-4748
A11C4	0160-3036	8		CAPACITOR-FDTHRU 500 PF +80 −20% 200 V	28480	0160-3036
A11C5	0160-3036	8		CAPACITOR-FDTHRU 500 PF +80 −20% 200 V	28480	0160-3036
A11C6	0160-4748	1	3	CAPACITOR-FDTHRU 100 PF 20% 200 V CER	28480	0160-4748
A11C7	0160-3036	8		CAPACITOR-FDTHRU 500 PF +80 −20% 200 V	28480	0160-3036
A11C8	0160-4748	1	3	CAPACITOR-FDTHRU 100 PF 20% 200 V CER	28480	0160-4748
A11C9	0160-3036	8		CAPACITOR-FDTHRU 500 PF +80 −20% 200 V	28480	0160-3036
A11J1	1250-0691	7	5	CONNECTOR-RF SMB M SGL-HOLE-FR 50 OHM	28480	1250-0691
A11J2	1250-0691	7	5	CONNECTOR-RF SMB M SGL-HOLE-FR 50 OHM	28480	1250-0691
A11J3	1250-0691	7	5	CONNECTOR-RF SMB M SGL-HOLE-FR 50 OHM	28480	1250-0691
A11J4	1250-0691	7	5	CONNECTOR-RF SMB M SGL-HOLE-FR 50 OHM	28480	1250-0691
A11J5	1250-0691	7	5	CONNECTOR-RF SMB M SGL-HOLE-FR 50 OHM	28480	1250-0691
A11U1	5086-7292	3	1	SAMPLER, 2-6.0 GHZ	28480	5086-7292

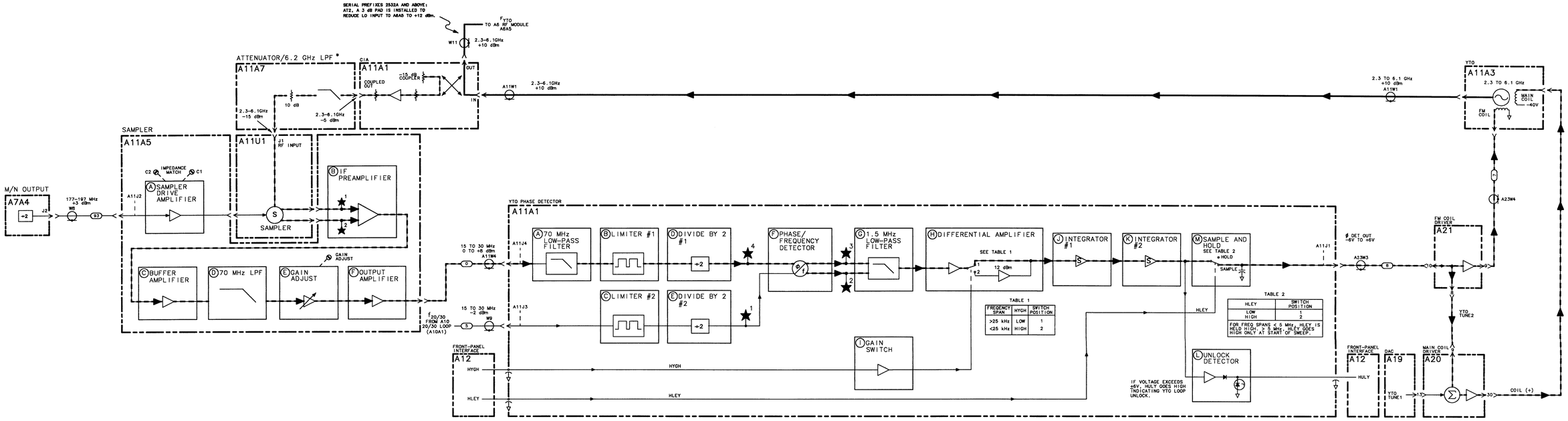

*A11A7 IS AN ATTENUATOR/LPF CABLE ASSEMBLY.

A11 YTO LOOP, BLOCK DIAGRAM

HP Part Number 85660-60123

Al **1A2** YTO Loop Interconnect

Reference Designation	HP Part Number	CD	Qty	Description	Mfr Code	Mfr Part Number
A11A2	85660-60123	6	1	BOARD ASSEMBLY. YTO LOOP INTERCONNECT	28480	85660-60123
A11A2C1	0180-0374	3	1	CAPACITOR-FXD 10UF+-10% 20VDC TA	56289	1500106X902082-DYS
A11A2C2	0160-3879	7	1	CAPACITOR-FXD .01UF +-20% 100VDC CER	04222	SR201C103MAAH
A11A2L1	9100-2262	3	1	INDUCTOR RF-CH-MLD 3.9UH +-10% .105D-INX	24226	10M391K
A11A2R1	0757-0280	3	1	RESISTOR 1K +-1% .125W TF TC=O+-100	19701	SFR25H
Al1A2R2	2100-1775	4	1	RESISTOR-TRMR 5K 5% WW TOP-ADJ l-TRN		CT-100-4-5K
A11A2W1	8120-2801	7	1	FLAT RIBBON ASSY 28-AWG 14-COND	28480	8120-2801
A11A2W2	8120-2803	9	1	FLAT RIBBON ASSY 28-AWG 20-COND	28480	8120-2803
A11A2W3	85660-60108	7	1	WIRE ASSEMBLY, WHITE/RED	28480	85660-60108
A11A2W4	85660-60109	8	1	WIRE ASSEMBLY, WHITE/BLUE	28480	85660-60109

**Indicates factory-selected value*

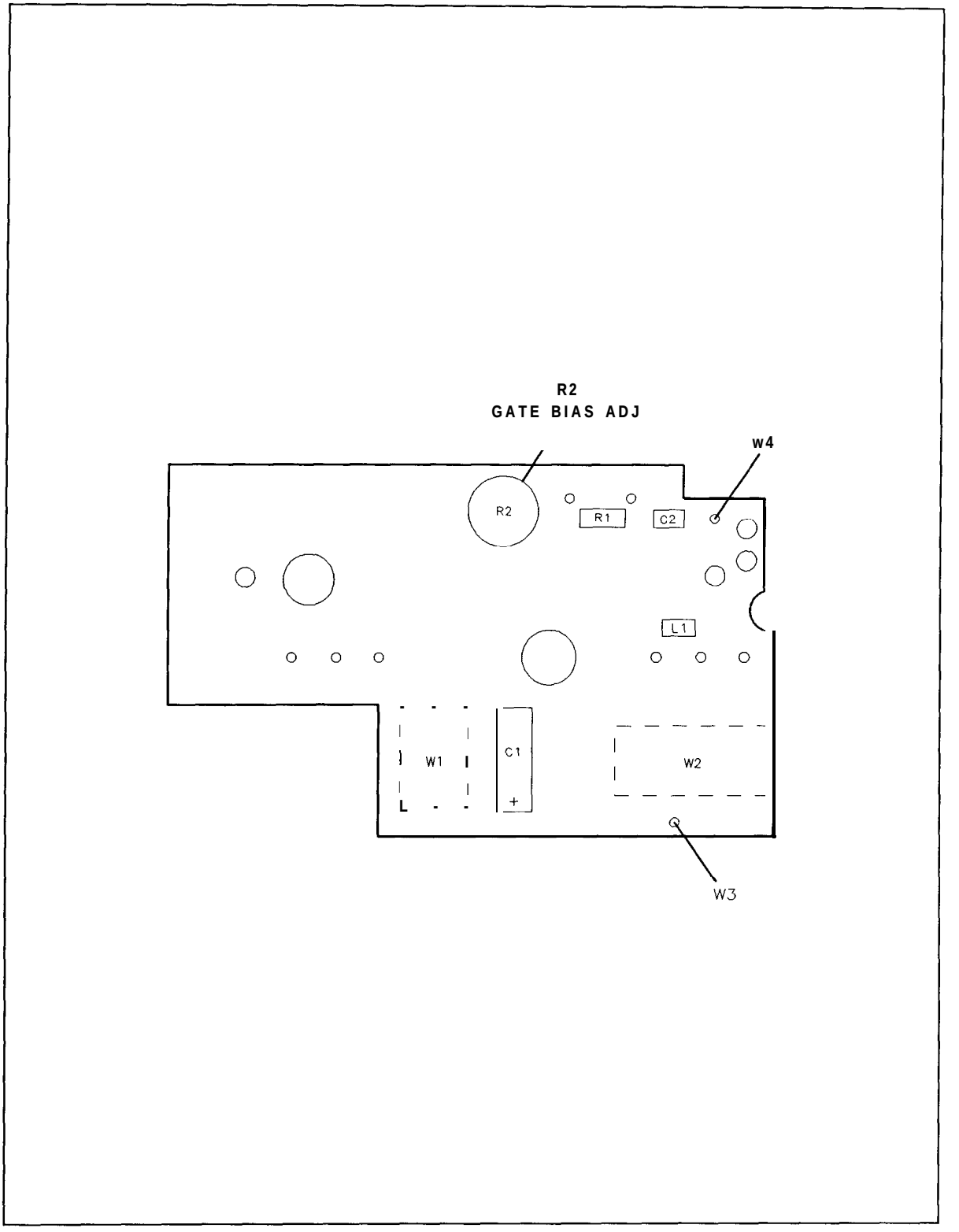

A11A2 YTO Loop Interconnect Component Locations, 85660-60123

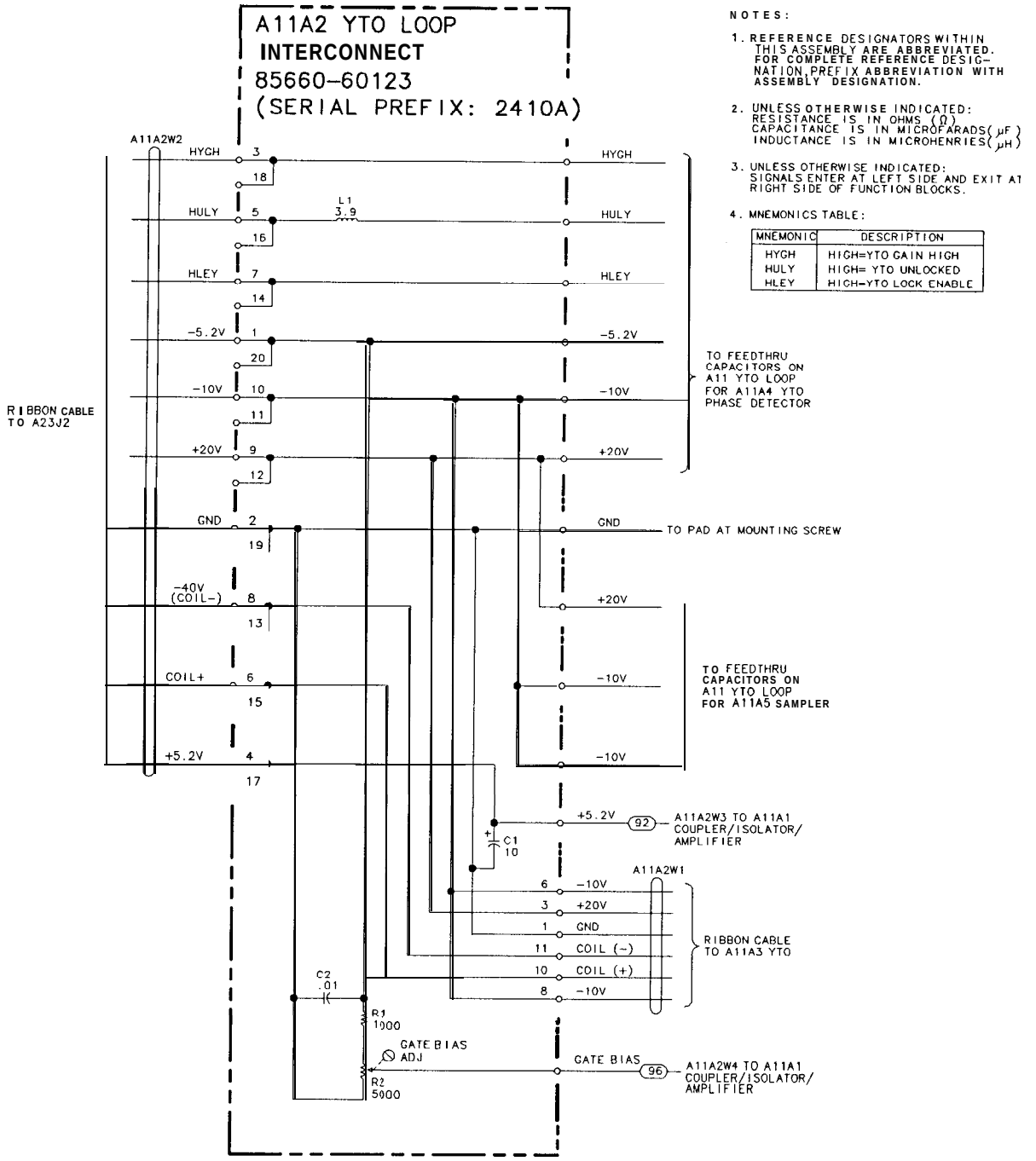

Al **1A2** YTO Loop Interconnect, Interconnect Diagram

A11A4

A11A4 YIG-Tuned Oscillator (YTO) Phase Detector, Circuit Description

The A11A4 YTO Phase Detector compares the frequency and phase of the A11A5 Sampler IF signal to the output of the A10 20/30 Synthesizer Loop. The resultant error signal is integrated, amplified, and applied to the A21 FM Coil Driver where it is routed to either the main coil (dc path) or FM coil (ac path) of the A11A3 YTO. This tunes the YTO frequency the proper amount in the proper direction to maintain phase lock.

70 MHz LPF Ⓐ

The output of the A11A5 Sampler (IF IN) is passed through a 70 MHz LPF to remove any unwanted frequencies which may have been introduced during the sampling process.

Limiters Ⓑ and Ⓒ and Divide by Twos Ⓓ and Ⓔ

Each of the two input signals (IF IN and 20/30 IN) are passed through a limiter to establish ECL signal levels. Each signal is then divided by two before being applied to the phase/frequency detector. This lowers the frequency at which the detector must operate.

Phase/Frequency Detector Ⓕ and 1.5 MHz LPF Ⓖ

The two input signals (IF IN and 20/30 IN), after being divided by two, are applied to Phase Frequency Detector U3. The function of U3 is to output a pulse which is related to the phase difference of the two input signals. The width of this pulse is directly proportional to the amount of phase difference. If the IF signal leads the 20/30 signal, a negative pulse appears at U3 pin 3 (TP3), the width of which is proportional to the amount of phase difference. If the 20/30 signal leads the IF signal, a negative pulse appears at U3 pin 12 (TP2). In each case, the other output is an ECL high (approximately -0.6 V). If the inputs are in phase, one of the detector outputs is an ECL high (approximately -0.6 V) with narrow negative spikes and the other just an ECL high. The detector outputs are averaged in the 1.5 MHz LPF before being applied to the differential amplifier.

Differential Amplifier Ⓗ

The detector outputs are applied to Differential Amplifier Q4. The output of this differential amplifier is directly related to the phase difference of the IF IN and 20/30 IN signals.

Loop Gain Switch ⓘ

In frequency spans less than 25 kHz (N = 1), Loop Gain Switch ⓘ is enabled. The enable signal HYGH (High = YTO Gain High) is from the Al2 Front-Panel Interface and is high whenever a frequency span of less than 25 kHz is selected. This high turns on Q2 which turns on Q3 which causes Q1 to saturate. Q1 then effectively becomes a short, placing R14 between the emitters of Q4A and Q4B. This lowers the emitter resistance by a factor of four, increasing the gain by approximately 12 dB. This improves phase noise at narrow frequency spans (<25 kHz).

Integrator #1 Ⓙ

Integrator #1 produces a ramp output proportional to the amplitude and period of the input. This integrating action is performed by R16, R21, and C12. Diodes CR2 and CR3 limit the upper and lower ramp voltages to one diode drop (approximately 0.6 V). This ramp may be in either a positive or negative direction depending on the input. When the loop is locked and the instrument is in zero frequency span, the output is a dc level.

Integrator #2 Ⓚ

Integrator #2 also produces a ramp output but of greater amplitude due to zener diodes VR1 and CR2. The upper and lower ramp voltages are limited by VR1/CR6 and VR2/CR7 to approximately 6.8 V. This corresponds to a capture range of about ±20 MHz, since YTO sensitivity is -3 MHz/V. Integrating action is performed by R24, R25, and C16. In zero frequency span, when the loop is locked, the output is a dc level.

Sample and Hold Ⓜ

The purpose of the sample and hold (U1 and associated circuitry) is to sample the ramp voltage output of the integrators to tune the YTO frequency, then hold this dc value to prevent the YTO loop from affecting the YTO Sweep.

For frequency spans less than 5 MHz (including ZERO), U1 is held in the sample mode. This means that the YTO is phase locked during the entire sweep for frequency spans less than 5 MHz.

For frequency spans greater than 5 MHz (fundamental mixing only), phase lock is performed only at the start of each sweep as follows. Just prior to a sweep, U1 is placed in the sample mode, the sampled output is applied to YTO to correct its frequency, and phase lock occurs. Then U1 is placed in the hold mode, which stores the sampled output voltage across Cl. This voltage keeps the YTO tuned to the correct frequency. The sweep occurs, and the sequence is repeated.

The mode of operation of U1 is determined by control signal HLEY (High = YTO Lock enable) from the Al2 Front-Panel Interface. The duration of the sample mode is determined by HLEY which varies with frequency span selected.

Unlock Detector Ⓛ

Phase lock is obtained by use of the YTO (FM coil for ac corrections and main coil dc corrections) which has a frequency tuning range of approximately ±20 MHz at 3 MHz/V sensitivity.

Unlock detector U2 and associated circuitry is used to determine when the error voltage is too large for the YTO Loop to respond. This detection is performed for both positive and negative error voltages by U2A and U2B respectively.

If the error voltage (ramp output of Integrator #2) exceeds f6.1 V, control signal HULY (High = YTO Unlocked) is generated and routed to the Al2 Front-Panel Interface where it causes a service request to be generated. Coded information corresponding to this request is placed on the Instrument Bus and is detected by the Al5 Controller which turns on the YTO UNLOCK annotation on the CRT.

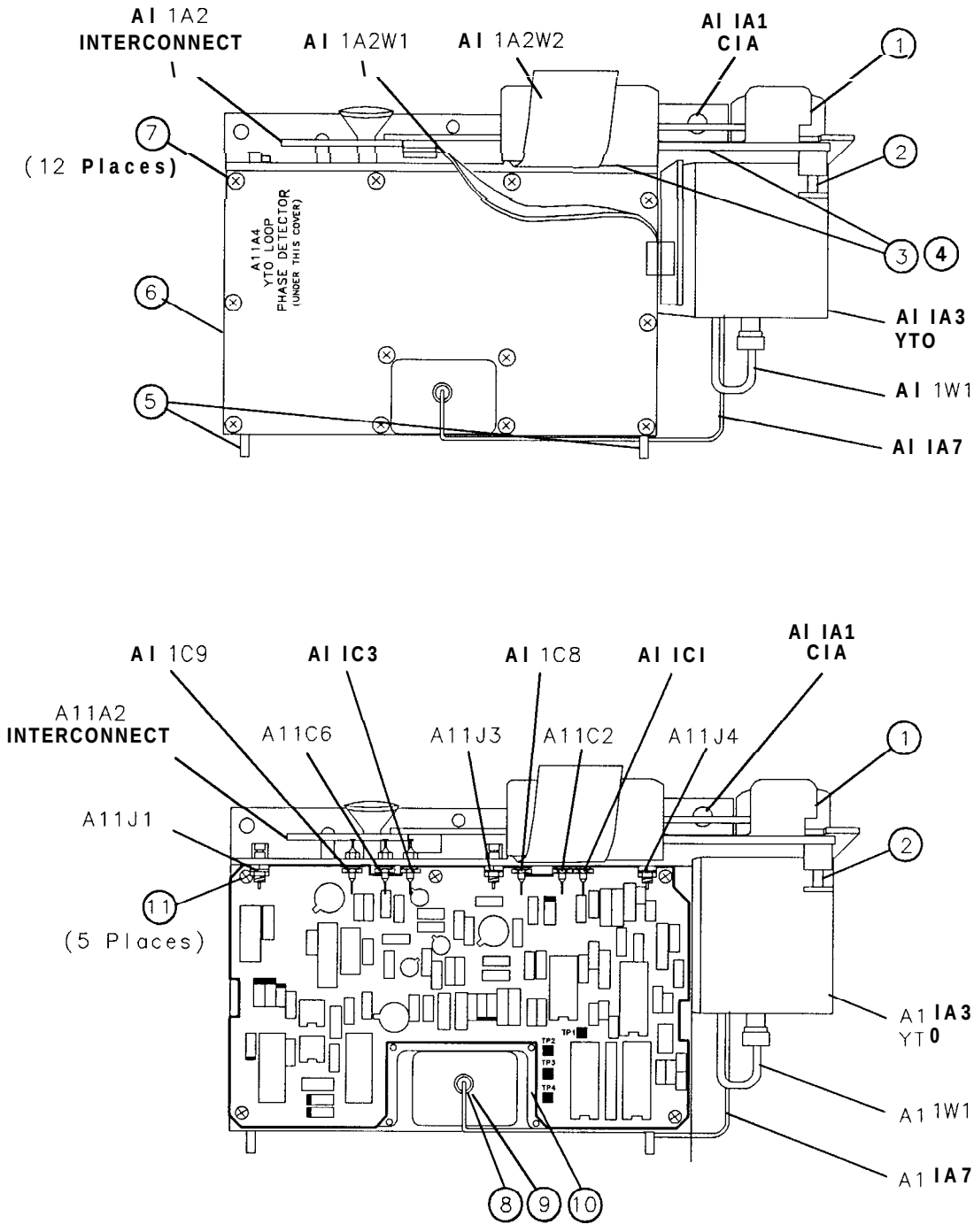

Figure 1. **A11A4** YTO Phase Detector, Parts Identification (1 of 2)

Item	HP Part Number	CD	Description	Mfr Code	Mfr Part Number
1	85660-00024	0	DECK, YTO LOOP ASSEMBLY	28480	85660-00024
2	1390-0284	0	CAP SCREW ASSEMBLY	28480	1390-0284
3	0520-0129	8	SCREW, MACH, 2-56, .312-IN LG, PAN HD	28480	0520-0129
4	2190-0890	1	WASHER, LOCK, 2-56 (FOR SCREW (3))	28480	2190-0890
5	85660-20088	8	STUD, YTO LOOP ASSEMBLY	28480	85660-20088
6	85660-00035	3	COVER, HOUSING (A11A4 YTO ϕ DET)	28480	85660-00035
7	2200-0165	6	SCREW, MACH, 4-40, .25-IN LG, FLAT HD	28480	2200-0165
8	1250-1143	6	NUT, HEX, RF CONNECTOR	28480	1250-1143
9	1250-1142	5	WASHER, LOCK, RF CONNECTOR	28480	1250-1142
10	86701-20009	5	HOUSING, YTO LOOP ASSEMBLY	28480	86701-20009
11	2200-0103	2	SCREW, MACH, 4-40, .25-IN LG, PAN HD	28480	2200-0103

Figure 1. **A11A4** YTO Phase Detector, Parts Identification (2 of 2)

HP Part Number 85660-60175

Al **1A4** YTO Phase Detector

Reference Designation	HP Part Number	CD	Qty	Description	Mfr Code	Mfr Part Number
A11A4	85660-60175	8	1	BOARD ASSEMBLY. YTO PHASE DETECTOR	28480	85660-60175
A11A4C1	0160-3787	6	1	CAPACITOR-FXO 1UF +-10% 50VOC MET-POLYC	84411	HEW-249
A11A4C2	0180-0116	1	1	CAPACITOR-FXO 6.8UF+-10% 35VOC TA	56289	150D685X9035B2-DYS
A11A4C3	0180-0197	8	1	CAPACITOR-FXO 2.2UF+-10% 20VDC TA	56289	150D225X9020A2-DYS
A11A4C4	0160-2307	4	1	CAPACITOR-FXD 47PF +-5% 30DVDC MICA -20/	09023	CD15ED470J03
A11A4C5	0160-2307	4	1	CAPACITOR-FXD 47PF +-5% 3DOVDC MICA -20/	09023	CD15ED470J03
A11A4C6	0160-2200	6	1	CAPACITOR-FXO 43PF +-5% 300VDC MICA -20/	09023	CD15ED430J03
Al1A4C7	0160-2264	2	1	CAPACITOR-FXD 20PF +-5% 500VDC CER 0+-30	52763	2RDPLX05020RNP0
Al1A4C8	0160-0574	3	1	CAPACITOR-FXD .022UF +-20% 100VDC CER	04222	SR201C223MAAH
Al1A4C9	0160-3879	7	1	CAPACITOR-FXD .01UF +-20% 100VDC CER	04222	SR201C103MAAH
A11A4C11	0160-3538	5	1	CAPACITOR-FXD 75DPF +-5% 100VDC MICA 0+7	09023	RDM15F751J1C
A11A4C12	0160-0165	8	1	CAPACITOR-FXD .056UF +-10% 200VDC POLYE	84411	HEW-238M
A11A4C15	0160-4835	7	1	CAPACITOR-FXD .1UF +-10% 50VDC CER	04222	SA115C104KAAH
Al1A4C16	0160-2453	1	1	CAPACITOR-FXD 0.22uF 80 V PDLYE-FL	09023	WMC08P22
A11A4C17	0160-4835	7	1	CAPACITOR-FXD .1UF +-10% 50VDC CER	04222	SA115C104KAAH
A11A4C19	0160-4787	a	1	CAPACITOR-FXD 22pF 100 V	04222	SA102A220JAAH
A11A4C20	0160-3661	5	1	CAPACITOR-FXD .1UF +-5% 50VDC MET-PDLYC	84411	HEW-249
A11A4C21	0160-0574	3	1	CAPACITOR-FXD .022UF +-20% 100VDC CER	04222	SR201C223MAAH
A11A4C23	0160-3538	5	1	CAPACITOR-FXD 750PF +-5% 100VDC MICA 0+7	09023	RDM15F751J1C
Al1A4C25	0160-0574	3	1	CAPACITOR-FXD .022UF +-20% 100VDC CER	04222	SR201C223MAAH
A11A4C26	0160-3879	7	1	CAPACITOR-FXD .01UF +-20% 100VDC CER	04222	SR201C103MAAH
A11A4C27	0160-0574	3	1	CAPACITOR-FXD .022UF +-20% 100VDC CER	04222	SR201C223MAAH
A11A4C28	0180-0197	8	1	CAPACITOR-FXD 2.2UF+-10% 20VDC TA	56289	150D225X9020A2-DYS
A11A4CR1	1901-0040	1	1	DIODE-SWITCHING 30V 50MA 2NS DO-35	71468	
A11A4CR2	1901-0518	8	1	DIODE-SCHOTTKY SM SIG		5082-2800
Al1A4CR3	1901-0518	8	1	DIODE-SCHOTTKY SM SIG		5082-2800
Al1A4CR4	1901-0040	1	1	DIODE-SWITCHING 30V 50MA 2NS DO-35	71468	
A11A4CR5	1901-0040	1	1	DIODE-SWITCHING 30V 5DMA 2NS DO-35	71468	
A11A4CR6	1901-0040	1	1	DIODE-SWITCHING 30V 5DMA 2NS DO-35	71468	
A11A4CR7	1901-0040	1	1	DIODE-SWITCHING 30V 50MA 2NS DO-35	71468	
A11A4L1	9100-1620	5	1	INDUCTOR RF-CH-MLD 15UH +-10% .166D-INX.	99800	1537-40
Al1A4L2	9100-1641	0	1	INDUCTOR RF-CH-MLD 240UH +-5% .166D-INX.	99800	1537-94
A11A4L3	9100-1641	0	1	INDUCTOR RF-CH-MLD 24DUH +-5% .166D-INX.	99800	1537-94
A11A4L4	9100-0368	6	1	INDUCTOR RF-CH-MLD 33DNH +-10% .105D-INX	32159	IA-3303M +-10%
A11A4L5	9100-2254	3	1	INDUCTOR RF-CH-MLD 39DNH +-10% .105D-INX	24226	10M390K
A11A4L6	9100-2254	3	1	INDUCTOR RF-CH-MLD 390NH +-10% .105D-INX	24226	10M390K
A11A4L7	9100-0368	6	1	INDUCTOR RF-CH-MLD 330NH +-10% .105D-INX	32159	1A-3303M +-10%
A11A4L8	9100-1620	5	1	INDUCTOR RF-CH-MLD 15UH +-10% .166D-INX.	99800	1537-40
A11A4L9	9100-1620	5	1	INDUCTOR RF-CH-MLD 15UH +-10% .166D-INX.	99800	1537-40
Al1A4MP2	8151-0013	4	1	WIRE 22AWG 1X22	92194	298
A11A4Q1	1855-0395	0	1	TRANSISTOR J-FET N-CHAN D-MODE TO-52 SI	17856	FN2645
A11A4Q2	1854-0404	0	1	TRANSISTOR NPN SI TO-18 PD=360MW	04713	
A11A4Q3	1853-0451	5	1	TRANSISTOR PNP 2N3799 SI TO-18 PD=360MW	04713	
Al1A4Q4	1854-1030	0	1	TRANSISTOR-DUAL NPN TO-78 PD=750MW	04713	
A11A4R1	0698-7212	9	1	RESISTOR 100 +-1% .05W TF TC=O+-100	19701	50635
Al1A4R2	0698-7212	9	1	RESISTOR 100 +-1% .05W TF TC=D+-100	19701	50635
A11A4R3	0698-7219	6	1	RESISTOR 196 +-1% .05W TF TC=D+-100	19701	50635

**Indicates factory-selected value*

HP Part Number 85660-60175

Al **1A4** YTO Phase Detector

Reference Designation	HP Part Number	CD	Qty	Description	Mfr Code	Mfr Part Number
A11A4R4	0698-7219	6	1	RESISTOR 196 +-1% .05W TF TC=D+-100	19701	50635
A11A4R5	0698-7212	9	1	RESISTOR 100 +-1% .05W TF TC=O+-100	19701	50635
A11A4R6	0698-3132	4	1	RESISTOR 261 1% .125W TF TC=0+-100	19701	SFR25H
Al1A4R7	0698-3440	7	1	RESISTOR 196 1% .125W TF TC=O+-100	19701	SFR25H
A11A4R8	0757-0280	3	1	RESISTOR 1K +-1% .125W TF TC=0+-100	19701	SFR25H
A11A4R9	0757-0280	3	1	RESISTOR 1K +-1% .125W TF TC=O+-100	19701	SFR25H
A11A4R10	0757-0442	9	1	RESISTOR 10K +-1% .125W TF TC=0+-100	19701	SFR25H
A11A4R11	0757-0442	9	1	RESISTOR 10K +-1% .125W TF TC=0+-100	19701	SFR25H
A11A4R12	0757-0442	9	1	RESISTOR 10K +-1% .125W TF TC=O+-100	19701	SFR25H
A11A4R13	0698-7288	9	1	RESISTOR 147K +-1% .05W TF TC=D+-100	19701	5023R
A11A4R14	0757-0418	9	1	RESISTOR 619 +-1% .125W TF TC=O+-100	19701	SFR25H
A11A4R15	0757-0438	3	1	RESISTOR 5.11K +-1% .125W TF TC=O+-100	19701	SFR25H
A11A4R16	0757-0442	9	1	RESISTOR 10K +-1% .125W TF TC=0+-100	19701	SFR25H
A11A4R17	0698-3440	7	1	RESISTOR 196 1% .125W TF TC=D+-100	19701	SFR25H
A11A4R18	0698-3132	4	1	RESISTOR 261 1% .125W TF TC=O+-100	19701	SFR25H
A11A4R19	0757-0442	9	1	RESISTOR 10K +-1% .125W TF TC=O+-100	19701	SFR25H
Al1A4R20	0698-3154	0	1	RESISTOR 4.22K 1% .125W TF TC=0+-100	19701	SFR25H
Al1A4R21	0757-1094	9	1	RESISTOR 1.47K +-1% .125W TF TC=O+-100	19701	SFR25H
A11A4R22	0757-0442	9	1	RESISTOR 10K +-1% .125W TF TC=O+-100	19701	SFR25H
A11A4R24*	0698-0082	7	1	RESISTOR 464 1% .125W TF TC=D+-100	19701	SFR25H
A11A4R25	0698-3152	a	1	RESISTOR 3.481: 1% .125W TF TC=D+-100	19701	SFR25H
A11A4R27	0757-0440	7	1	RESISTOR 7.5K +-1% .125W TF TC=O+-100	19701	SFR25H
Al1A4R28	0757-0458	7	1	RESISTOR 51.1K +-1% .125W TF TC=D+-100	19701	SFR25H
Al1A4R29	0698-3157	3	1	RESISTOR 19.6K 1% .125W TF TC=O+-100	19701	SFR25H
A11A4R30	0698-3155	1	1	RESISTOR 4.64K 1% .125W TF TC=0+-100	19701	SFR25H
A11A4R31	0757-0416	7	1	RESISTOR 511 +-1% .125W TF TC=O+-100	19701	SFR25H
A11A4R32	0757-0416	7	1	RESISTOR 511 +-1% .125W TF TC=0+-100	19701	SFR25H
Al1A4R33	0698-4020	1	1	RESISTOR 9.531: 1% .125W TF TC=D+-100	19701	SFR25H
A11A4R34	0698-0085	0	1	RESISTOR 2.61K 1% .125W TF TC=D+-100	19701	SFR25H
A11A4R35	0757-0438	3	1	RESISTOR 5.11K +-1% .125W TF TC=D+-100	19701	SFR25H
Al1A4R36	0698-3136	8	1	RESISTOR 17.8K 1% .125W TF TC=O+-100	19701	SFR25H
A11A4R37	0757-0279	0	1	RESISTOR 3.16K +-1% .125W TF TC=O+-100	19701	SFR25H
Al1A4R43	0757-0421	4	1	RESISTOR 825 +-1% .125W TF TC=0+-100	19701	SFR25H
A11A4R53	0757-0394	0	1	RESISTOR 51.1 +-1% .125W TF TC=O+-100	19701	SFR25H
A11A4R54	0757-0442	9	1	RESISTOR 10K +-1% .125W TF TC=D+-100	19701	SFR25H
A11A4U1	1826-0422	3	1	SAMPLE AND HOLD 8 -METAL	27014	LF298H
Al1A4U2	5081-8117	3	1	SCREENED 1826-0092	28480	5081-8117
A11A4U3	1820-1344	8	1	PHASE DETECTOR		ICMC12040P
A11A4U4	1820-0802	1	1	IC ECL QUAD 2 NOR GATE		MC10102P
A11A4U5	1826-0783	9	1	IC DP AMP LOW-NOISE 8-DIP-C PKG	18324	NE5534AFE
A11A4U6	1820-0817	8	1	IC FF ECL D-M/S DUAL	04713	MC10131P
A11A4U7	1810-0204	6	1	NETWORK-RES 8-SIP 1.0K OHM X 7	11236	750-81
Al1A4U8	1820-0817	8	1	IC FF ECL D-M/S DUAL	04713	MC10131P
Al1A4U9	1826-0783	9	1	IC OP AMP LOW-NOISE 8-DIP-C PKG	18324	NE5534AFE
A11A4VR1	1902-1260	1	1	DIODE-ZNR 1N5525C 6.2V 2% DO-7 PD=.4W IR	04713	1N5525C
A11A4VR2	1902-1260	1	1	DIODE-ZNR 1N5525C 6.2V 2% DO-7 PD=.4W IR	04713	1N5525C
A11A4VR4	1902-3082	9	1	DIODE-ZNR 4.64V 5% DO-35 PD=.4W	04713	

**Indicates factory-selected value*

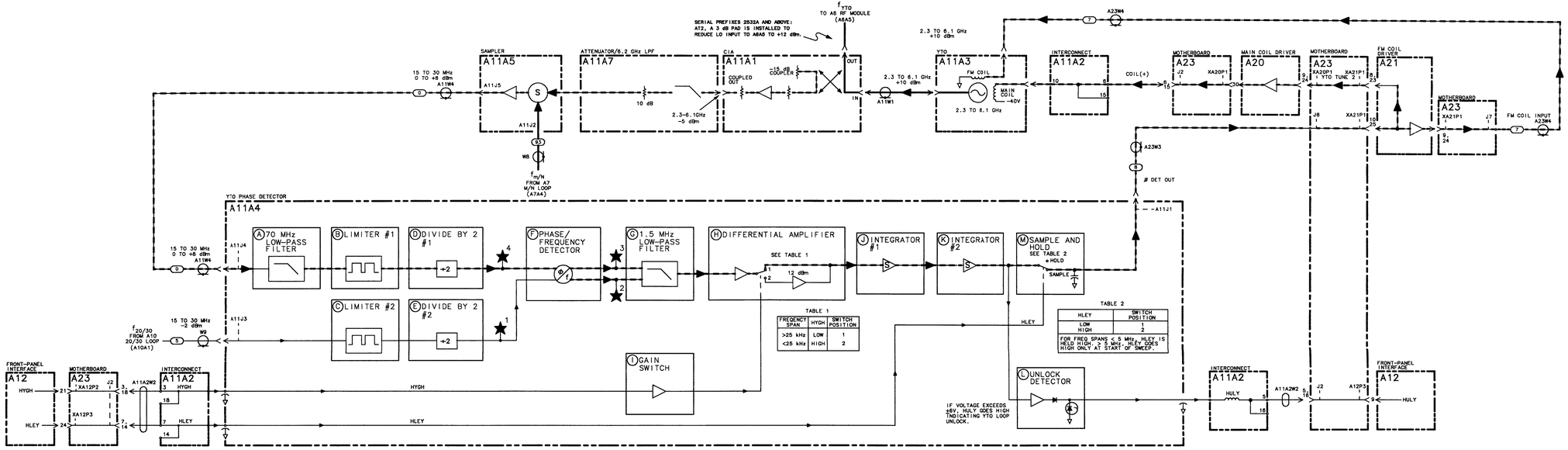

A11A4 YTO PHASE DETECTOR, BLOCK DIAGRAM

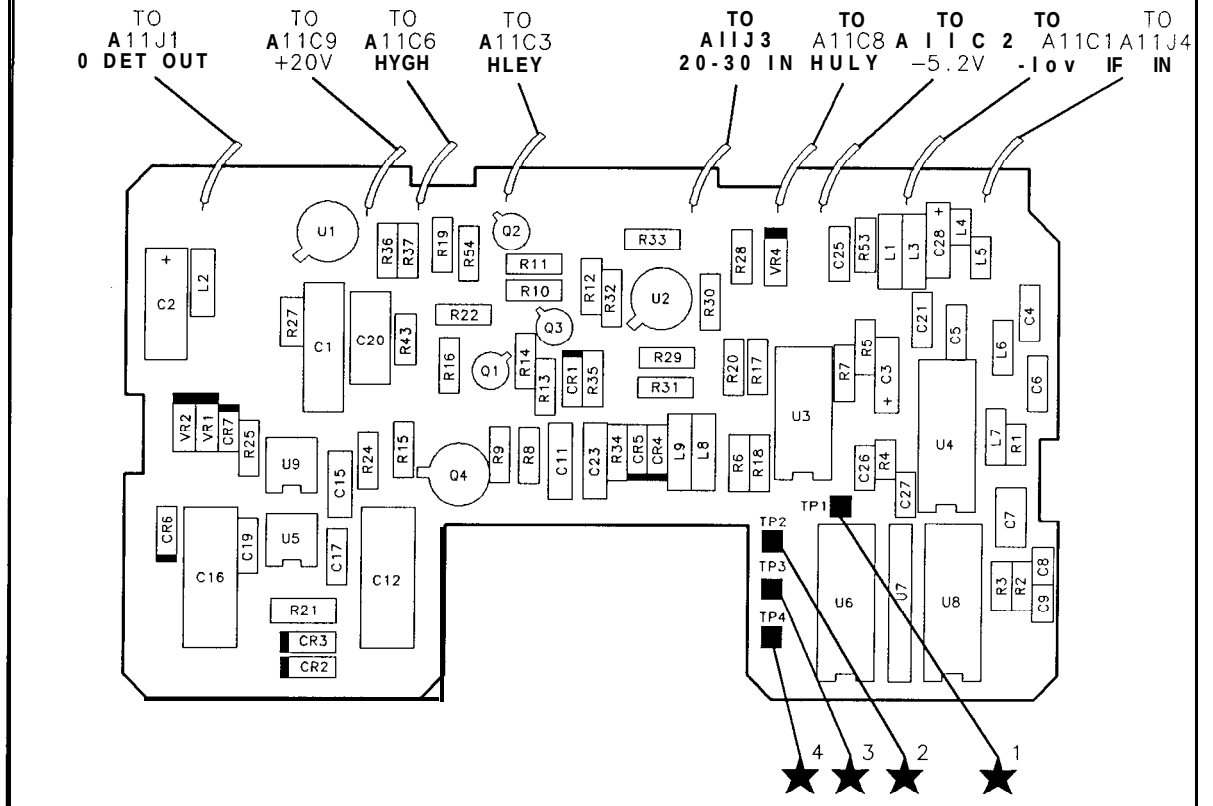

Al **1A4** YTO Phase Detector Component Locations, 85660-60175

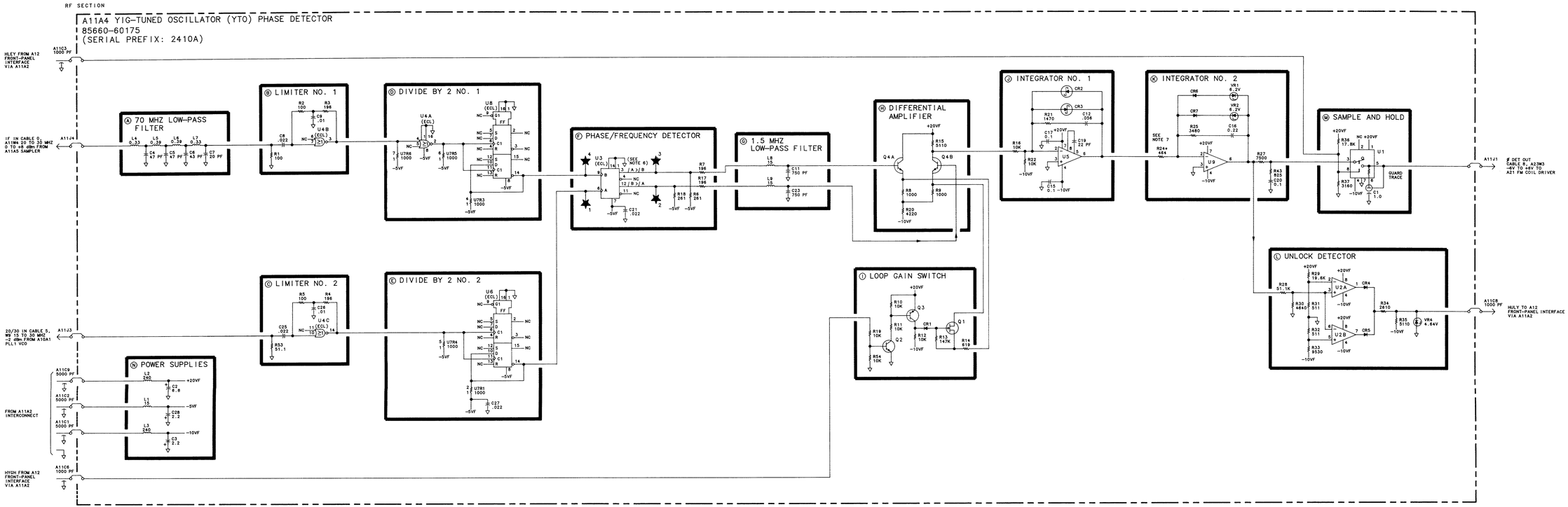

NOTES:

1. REFERENCE DESIGNATORS WITHIN THIS ASSEMBLY ARE ABBREVIATED. FOR COMPLETE REFERENCE DESIGNATION, PREFIX ABBREVIATION WITH ASSEMBLY DESIGNATION.
2. UNLESS OTHERWISE INDICATED: RESISTANCE IS IN OHMS (Ω), CAPACITANCE IS IN PICOFARADS (pF) INDUCTANCE IS IN MICROHENRIES (μH)
3. UNLESS OTHERWISE INDICATED: SIGNALS ENTER AT LEFT SIDE AND EXIT AT RIGHT SIDE OF FUNCTION BLOCKS.
4. U7 PIN CONFIGURATION:

5. MNEMONICS TABLE:

MNEMONIC	DESCRIPTION
HLEY	HIGH=YTO LOCK ENABLE
HYGH	HIGH=YTO GAIN HIGH
HULY	HIGH=YTO UNLOCKED

6. "Φ A ⋈ B" SYMBOLIZES PHASE A LEADS PHASE B. (SEE CIRCUIT DESCRIPTION)
7. R24+ IS A FACTORY-SELECTED COMPONENT. ACCEPTABLE VALUES RANGE FROM 348Ω TO 562Ω.

A11A4

A11A4 YTO PHASE DETECTOR, SCHEMATIC DIAGRAM

A11A5

A11A5 Sampler, Circuit Description

The A11A5 Sampler mixes the output of the A11A3 YTO (RF INPUT) with the Nth harmonic of the output of the A7 M/N Reference Loop (M/N IN). The 20 to 30 MHz difference signal (IF OUT) is output to the A11A4 YTO Phase Detector to be compared with the 20 to 30 MHz (20/30 IN) from the A10 20/30 Synthesizer for the purpose of phase locking.

Sampler Drive Amplifier Ⓐ

The output of the A7 M/N Reference Loop (M/N IN) is applied to common-base amplifier Q3. The output of Q3 is ac coupled to common-emitter amplifier QS. The output of Q8 is passed through an impedance matching network which provides maximum drive power to AllUl Sampler. Adjustments Cl and C2 optimize this impedance match.

Sampler A11U1

AllUl Sampler contains a step recovery diode (SRD) circuit to create harmonics of the M/N IN signal which are mixed with the low-level (-15 dBm) RF INPUT signal from the A11A3 YTO (via the A11A1 Coupler/Isolator/Amplifier and A11A7 Attenuator/6.2 GHz LPF).

When the YTO Loop is phase locked, the mixing product of the Nth harmonic of the M/N IN signal and the RF INPUT signal is precisely equal to the 20/30 IN signal from the A10 20/30 Synthesizer.

IF Preamplifier Ⓑ

The IF Preamplifier consists of common-source amplifier Q4, common-emitter amplifier Q2, and feedback divider R20/R16. 0verall gain provided is approximately 14 dB.

Buffer Amplifier Ⓒ and 70 MHz LPF Ⓓ

The AllUl Sampler output, after being amplified, is buffered by emitter-follower Q7 and applied to a 70 MHz low-pass filter. This filtering is done to remove any unwanted mixing products produced by the mixing action of the sampler.

Gain Adjust Ⓔ

After being filtered, the IF signal is applied to common-emitter amplifier Q6 which has adjustable gain. IF Gain adjustment R1 can be adjusted to provide from 5 dB to 20 dB of gain. This is used to adjust the level of the IF signal to the proper level for comparison to the 20/30 signal in the A11A4 YTO Phase Detector.

Output Amplifier Ⓕ

The IF signal is further amplified by output amplifier Q5 and Q1. Gain is approximately 21 dB. This provides the proper level signal to drive the A11A4 YTO Phase Detector.

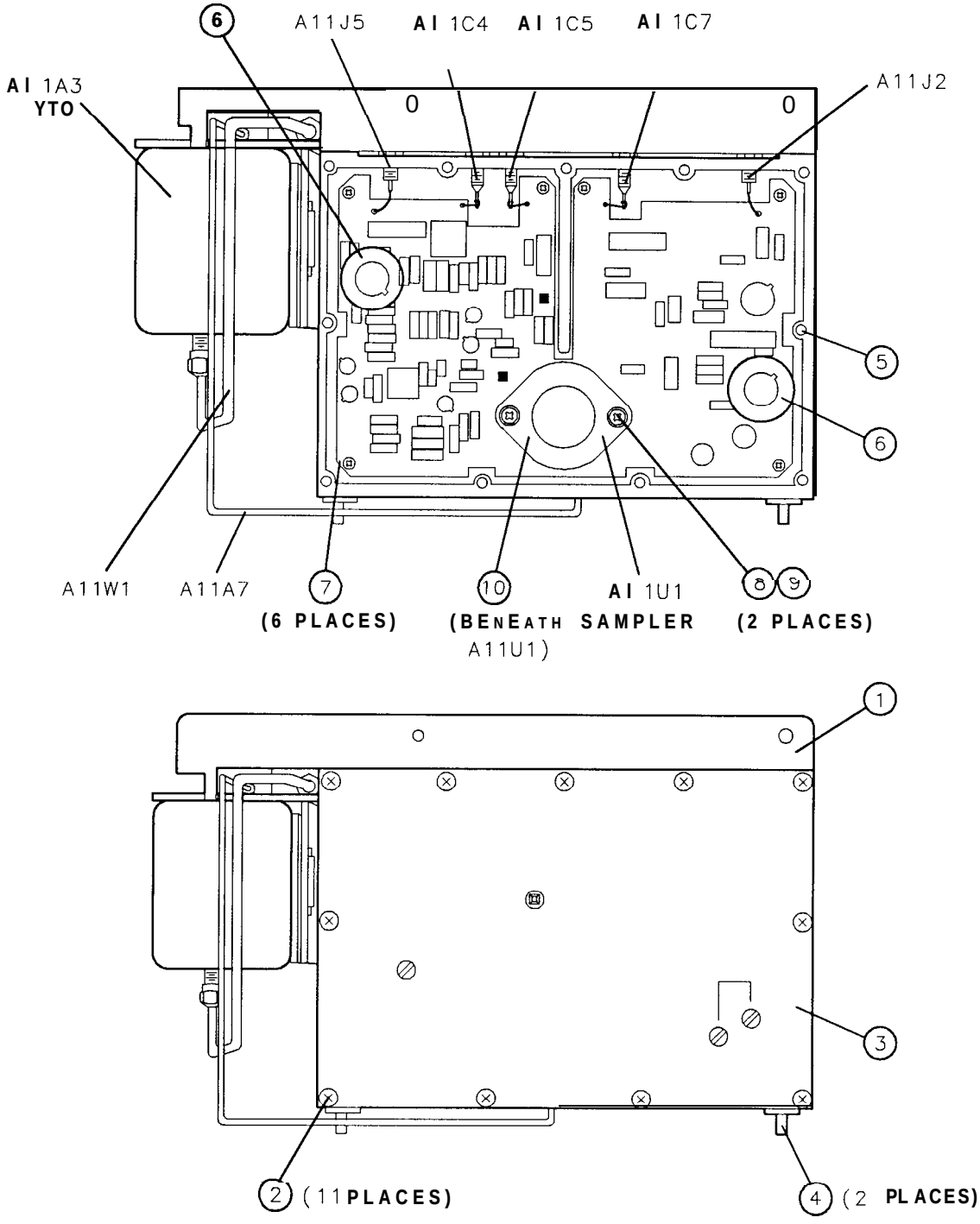

Figure 1. **A11A5** Sampler, Parts Identification (1 of 2)

Item	HP Part Number	CD	Description	Mfr Code	Mfr Part Number
1	85660-00024	0	DECK, YTO LOOP ASSEMBLY	28480	85660-0002
2	2200-0165	6	SCREW, MACH, 4-40, .25-IN LG, FLAT HD	28480	2200-0165
3	85660-00034	2	COVER, HOUSING (A11A5 SAMPLER)	28480	85660-0003
4	85660-20088	8	STUD, YTO LOOP ASSEMBLY	28480	85660-2008
5	86701-20009	5	HOUSING, YTO LOOP ASSEMBLY	28480	86701-2000
6	1205-0011	0	HEAT SINK, TO-5/TO-29-CS	28480	1205-0011
7	2200-0103	2	SCREW, MACH, 4-40, .25-IN LG, PAN HD	28480	2200-0103
8	2200-0111	2	SCREW, MACH, 4-40, .5-IN LG, PAN HD	28480	2200-0111
9	3050-0105	6	WASHER, FLAT, .125-IN ID (FOR SCREW (8))	28480	3050-0105
10	86701-00054	8	SPACER, SAMPLER	28480	86701-00054

Figure 1. **A11A5** Sampler, Parts Identification (2 of 2)

HP Part Number 85660-60199

Al **1A5** Sampler

Reference Designation	HP Part Number	C D	Qty	Description	Mfr Code	Mfr Part Number
A11A5	85660-60199	6	1	BOARD ASSEMBLY, SAMPLER	28480	85660-60199
A11A5C1	0121-0046	2	1	CAPACITOR-V TRMR-CER 9-35PF 200V PC-MTG	52763	304-322-573
Al1A5C2	0121-0046	2	1	CAPACITOR-V TRMR-CER 9-35PF 200V PC-MTG	52763	304-322-573
A11A5C3	0180-0197	8	1	CAPACITOR-FXD 2.2UF+-10% 20VDC TA	56289	150D225X9020A2-DYS
Al1A5C4	0180-0116	1	1	CAPACITOR-FXD 6.8UF+-10% 35VDC TA	56289	150D685X9035B2-DYS
A11A5C5	0160-2055	9	1	CAPACITOR-FXD .01UF +80-20% 100VDC CER		805-504 Y5V 1032
Al1A5C6	0160-2150	5	1	CAPACITOR-FXD 33PF +-5% 300VDC MICA	09023	CD15ED330J03
Al1A5C7	0160-2055	9	1	CAPACITOR-FXD .01UF +80-20% 100VDC CER		805-504 Y5V 1032
A11A5C8	0160-3878	6	1	CAPACITOR-FXD 1000pF 100 V	04222	SR201C102MAAH
A11A5C9	0180-0197	8	1	CAPACITOR-FXD 2.2UF+-10% 20VDC TA	56289	150D225X9020A2-DYS
A11A5C10	0160-2264	2	1	CAPACITOR-FXD 20PF +-5% 500VDC CER	52763	2RDPLX05020RNP0
A11A5C11	0160-3878	6	1	CAPACITOR-FXD 1000pF 100 V	04222	SR201C102MAAH
A11A5C12	0160-2055	9	1	CAPACITOR-FXD .01UF +80-20% 100VDC CER		805-504 Y5V 1032
A11A5C13	0180-0228	6	1	CAPACITOR-FXD 22UF+-10% 15VDC TA	56289	150D226X9015B2-DYS
A11A5C14	0160-4832	4	1	CAPACITOR-FXD .01UF +-10% 100VDC CER	04222	SA101C103KAAH
A11A5C15	0160-4832	4	1	CAPACITOR-FXD .01UF +-10% 100VDC CER	04222	SA101C103KAAH
A11A5C17	0160-4832	4	1	CAPACITOR-FXD .01UF +-10% 100VDC CER	04222	SA101C103KAAH
A11A5C18	0160-4832	4	1	CAPACITOR-FXD .01UF +-10% 100VDC CER	04222	SA101C103KAAH
A11A5C19	0160-4832	4	1	CAPACITOR-FXD .01UF +-10% 100VDC CER	04222	SA101C103KAAH
A11A5C20	0160-0939	4	1	CAPACITOR-FXD 430pF 300 V MICA	09023	CD15FD431J03
A11A5C21	0160-4832	4	1	CAPACITOR-FXD .01UF +-10% 100VDC CER	04222	SA101C103KAAH
A11A5C22*	0140-0196	3	1	CAPACITOR-FXD 150PF +-5% 300VDC MICA	09023	CD15FD151J03
A11A5C23	0160-4832	4	1	CAPACITOR-FXD .01UF +-10% 100VDC CER	04222	SA101C103KAAH
Al1A5C24	0140-0193	0	1	CAPACITOR-FXD 82PF +-5% 300VDC MICA	09023	CD15ED820J03
A11A5C25	0140-0193	0	1	CAPACITOR-FXD 82PF +-5% 300VDC MICA	09023	CD15ED820J03
A11A5C26	0160-2308	5	1	CAPACITOR-FXD 36PF +-5% 300VDC MICA	09023	CD15ED360J03
A11A5C27	0160-4832	4	1	CAPACITOR-FXD .01UF +-10% 100VDC CER	04222	SA101C103KAAH
A11A5C28	0160-4832	4	1	CAPACITOR-FXD .01UF +-10% 100VDC CER	04222	SA101C103KAAH
A11A5C29	0160-4832	4	1	CAPACITOR-FXD .01UF +-10% 100VDC CER	04222	SA101C103KAAH
A11A5C30	0160-4832	4	1	CAPACITOR-FXD .01UF +-10% 100VDC CER	04222	SA101C103KAAH
A11A5C31	0160-4832	4	1	CAPACITOR-FXD .01UF +-10% 100VDC CER	04222	SA101C103KAAH
A11A5C32	0160-4832	4	1	CAPACITOR-FXD .01UF +-10% 100VDC CER	04222	SA101C103KAAH
A11A5L2	9140-0144	0	1	INDUCTOR RF-CH-MLD 4.7UH +-10% .105D	99800	1025-36
A11A5L3	9100-1623	8	1	INDUCTOR RF-CH-MLD 27UH +-5% .166D	99800	1537-48
Al1A5L4	9100-2251	0	1	INDUCTOR RF-CH-MLD 220NH +-10% .105D	24226	10M220K
A11A5L5	9100-2258	7	1	INDUCTOR RF-CH-MLD 1.2UH +-10% .105D	99800	1025-22
A11A5L6	9100-2258	7	1	INDUCTOR RF-CH-MLD 1.2UH +-10% .105D	99800	1025-22
A11A5L7	9100-0346	0	1	INDUCTOR RF-CH-MLD 50NH +-20% .105D	32159	1A5004M 20%
A11A5L10*	9100-2261	2	1	INDUCTOR RF-CH-MLD 2.7UH +-10% .105D	99800	1025-30
A11A5L11	9100-0368	6	1	INDUCTOR RF-CH-MLD 330NH +-10% .105D	32159	1A-3303M +-10%
A11A5L12	9100-2249	6	1	INDUCTOR RF-CH-MLD 150NH +-10% .105D	24226	10M150K
A11A5L13	9100-2250	9	1	INDUCTOR RF-CH-MLD 180NH +-10% .105D	24226	10M180K
A11A5L14	9100-2249	6	1	INDUCTOR RF-CH-MLD 150NH +-10% .105D	24226	10M150K
Al1A5MP1				NOT ASSIGNED		
A11A5MP3	1205-0011	0	1	HEAT SINK TO-5/TO-39-CS	98978	TXBF-032-025B
A11A5MP5	1251-3172	7	1	CONNECTOR-SGL CONT SKT .03-IN-BSC-SZ RND	00779	2-331677-9
A11A5MP7	8151-0013	4	1	WIRE 22AWG 1X22	92194	298

**Indicates factory-selected value*

HP Part Number 85660-60199

Al **1A5** Sampler

Reference Designation	HP Part Number	C. D	Qty	Description	Mfr Code	Mfr Part Number
A11A5MP8	1200-0173	F	1	INSULATOR-XSTR DAP-GL	07047	A-10001 DAP
A11A5Q1	1854-0247	C	1	TRANSISTOR NPN SI TO-39 PD=1W FT=800MHZ	04712	
A11A5Q2	1854-0345	E	1	TRANSISTOR NPN 2N5179 SI TO-72 PD=200MW	04713	2N5179
A11A5Q3	1854-0247	9	1	TRANSISTOR NPN SI TO-39 PD=1W FT=800MHZ	04713	
A11A5Q4	1855-0235	7	1	TRANSISTOR J-FET N-CHAN D-MODE TO-52 SI	17856	
A11A5Q5	1853-0015	7	1	TRANSISTOR PNP SI PD=200MW FT=500MHZ	04713	
A11A5Q6	1854-0345	a	1	TRANSISTOR NPN 2N5179 SI TO-72 PD=200MW	04713	2N5179
A11A5Q7	1854-0345	a	1	TRANSISTOR NPN 2N5179 SI TO-72 PD=200MW	04713	2N5179
A11A5Q8	1854-0247	9	1	TRANSISTOR NPN SI TO-39 PD=1W FT=800MHZ	04713	
A11A5R1	2100-3383	4	1	RESISTOR-TRMR 50 10% TKF TOP-ADJ I-TRN	32997	3386P-Y46-500
A11A5R2	0757-0394	0	1	RESISTOR 51.1 +-1% .125W TF TC=O+-100	19701	SFR25H
A11A5R3	0698-3440	7	1	RESISTOR 196 1% .125W TF TC=O+-100	19701	SFR25H
A11A5R4	0698-0085	0	1	RESISTOR 2.61K 1% .125W TF TC=O+-100	19701	SFR25H
A11A5R5	0757-0424	7	1	RESISTOR 1.1K +-1% .125W TF TC=O+-100	19701	SFR25H
A11A5R6	0757-0280	3	1	RESISTOR 1K +-1% .125W TF TC=O+-100	19701	SFR25H
A11A5R7	0757-0278	9	1	RESISTOR 1.78K +-1% .125W TF TC=O+-100	19701	SFR25H
A11A5R8	0757-0796	6	1	RESISTOR 82.5 +-1% .5W TF TC=O+-100	19701	5053R
A11A5R9	0757-0399	5	1	RESISTOR 82.5 +-1% .125W TF TC=O+-100	19701	SFR25H
A11A5R10	0698-3457	6	1	RESISTOR 316K 1% .125W TF TC=O+-100	19701	SFR25H
A11A5R11	0757-0470	3	1	RESISTOR 162K +-1% .125W TF TC=O+-100	19701	SFR25H
A11A5R13	0698-7216	3	1	RESISTOR 147 +-1% .05W TF TC=O+-100	19701	50635
A11A5R15	0757-0424	7	1	RESISTOR 1.1K +-1% .125W TF TC=O+-100	19701	SFR25H
A11A5R16	0757-0398	1	1	RESISTOR 75 +-1% .125W TF TC=O+-100	19701	SFR25H
A11A5R17	0757-0424	7	1	RESISTOR 1.1K +-1% .125W TF TC=O+-100	19701	SFR25H
A11A5R18	0757-0419	0	1	RESISTOR 681 +-1% .125W TF TC=O+-100	19701	SFR25H
A11A5R19	0757-0421	1	1	RESISTOR 825 +-1% .125W TF TC=O+-100	19701	SFR25H
A11A5R20	0698-7224	3	1	RESISTOR 316 +-1% .05W TF TC=O+-100	19701	50635
A11A5R21	0698-7205	0	1	RESISTOR 51.1 +-1% .05W TF TC=D+-100	19701	50635
A11A5R22*	0698-7195	7	1	RESISTOR 19.6 +-1% .05W TF TC=O+-100	19701	50635
A11A5R23	0698-0083	B	1	RESISTOR 1.96K 1% .125W TF TC=O+-100	19701	SFR25H
A11A5R24	0698-0084	9	1	RESISTOR 2.15K 1% .125W TF TC=O+-100	19701	SFR25H
A11A5R25	0698-0082	7	1	RESISTOR 464 1% .125W TF TC=O+-100	19701	SFR25H
A11A5R26	0757-0280	3	1	RESISTOR 1K +-1% .125W TF TC=O+-100	19701	SFR25H
A11A5R27	0757-0394	0	1	RESISTOR 51.1 +-1% .125W TF TC=O+-100	19701	SFR25H
A11A5R28	0698-0082	7	1	RESISTOR 464 1% .125W TF TC=O+-100	19701	SFR25H
A11A5R29	0698-7212	3	1	PESISTOR 100 +-1% .05W TF TC=O+-100	19701	50635
A11A5R30	0757-0346	2	1	RESISTOR 10 +-1% .125W TF TC=O+-100	91637	CMF-55-1. T-1
A11A5R31	0757-0420	3	1	RESISTOR 750 +-1% .125W TF TC=O+-100	19701	SFR25H
A11A5R32	0698-3439	4	1	RESISTOR 178 1% .125W TF TC=D+-100	19701	SFR25H
A11A5R33	0757-0346	2	1	RESISTOR 10 +-1% .125W TF TC=O+-100	91637	CMF-55-1. T-1
A11A5R34	0757-0280	3	1	RESISTOR 1K +-1% .125W TF TC=O+-100	19701	SFR25H
A11A5R35	0698-3439	4	1	RESISTOR 178 1% .125W TF TC=O+-100	19701	SFR25H
A11A5R36	0757-0394	0	1	RESISTOR 51.1 +-1% .125W TF TC=O+-100	19701	SFR25H
A11A5R37	0757-0394	0	1	RESISTOR 51.1 +-1% .125W TF TC=O+-100	19701	SFR25H
A11A5R38	0757-0180		1	RESISTOR 31.6 +-1% .125W TF TC=O+-100	19701	SFR25H
A11A5R39	0757-0180	2	1	RESISTOR 31.6 +-1% .125W TF TC=O+-100	19701	SFR25H
A11A5R40	0757-0394	0	1	RESISTOR 51.1 +-1% .125W TF TC=O+-100	19701	SFR25H
A11A5R41	0698-7196	8	1	RESISTOR 21.5 +-1% .05W TF TC=O+-100	19701	50635

**Indicates factory-selected value*

HP Part Number 85660-60199

Al **1A5** Sampler

Reference Designation	HP Part Number	C D	Qty	Description	Mfr Code	Mfr Part Number
A11A5TP1	1360-0124	3	1	CONNECTOR-SGL CONT PIN .04-IN-BSC-SZ RNC	97300	
Al 1A5TP2	)360-0124	3	1	CONNECTOR-SGL CONT PIN .04-IN-BSC-SZ RNC	97300	

**Indicates factory-selected value*

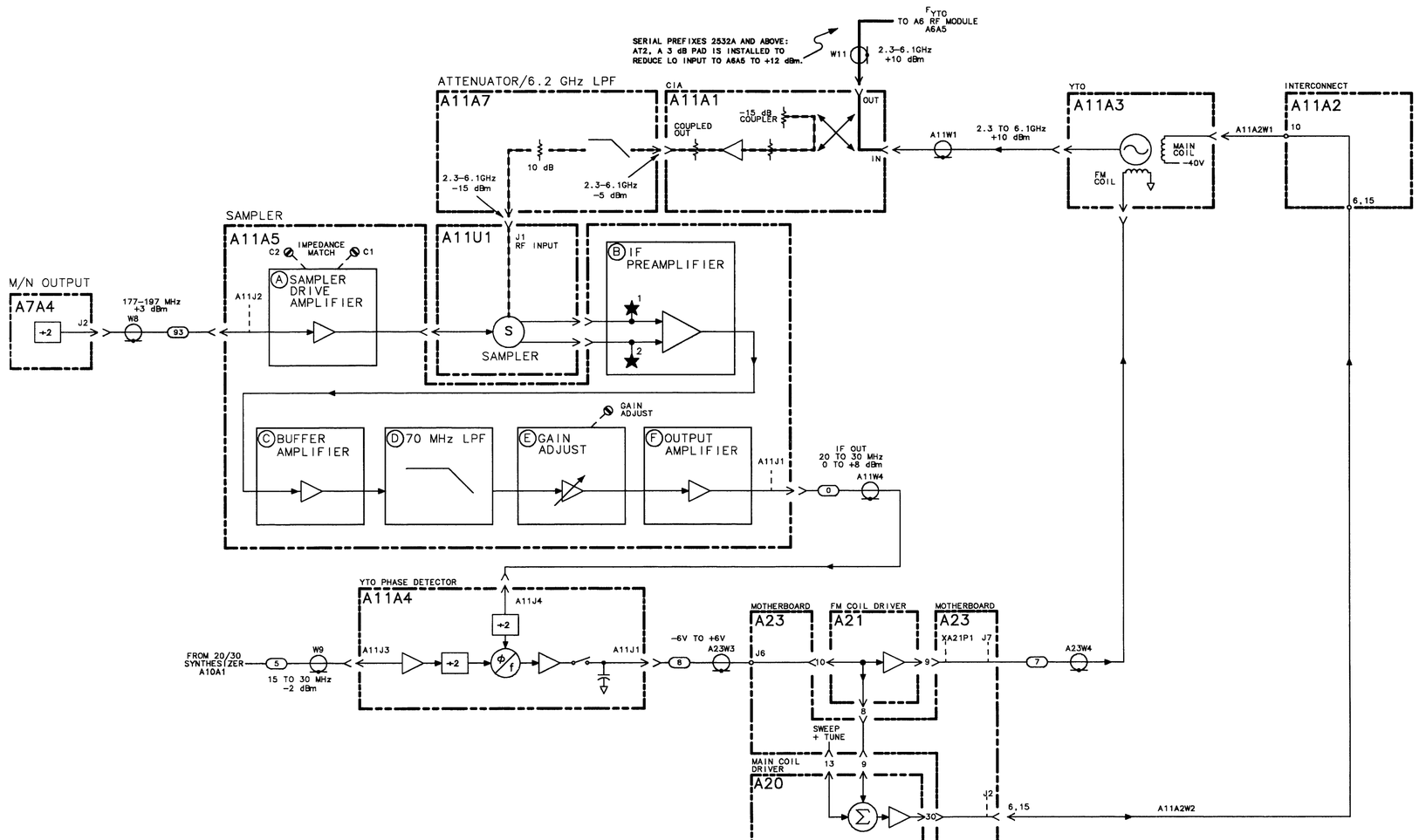

A11A5 SAMPLER, BLOCK DIAGRAM

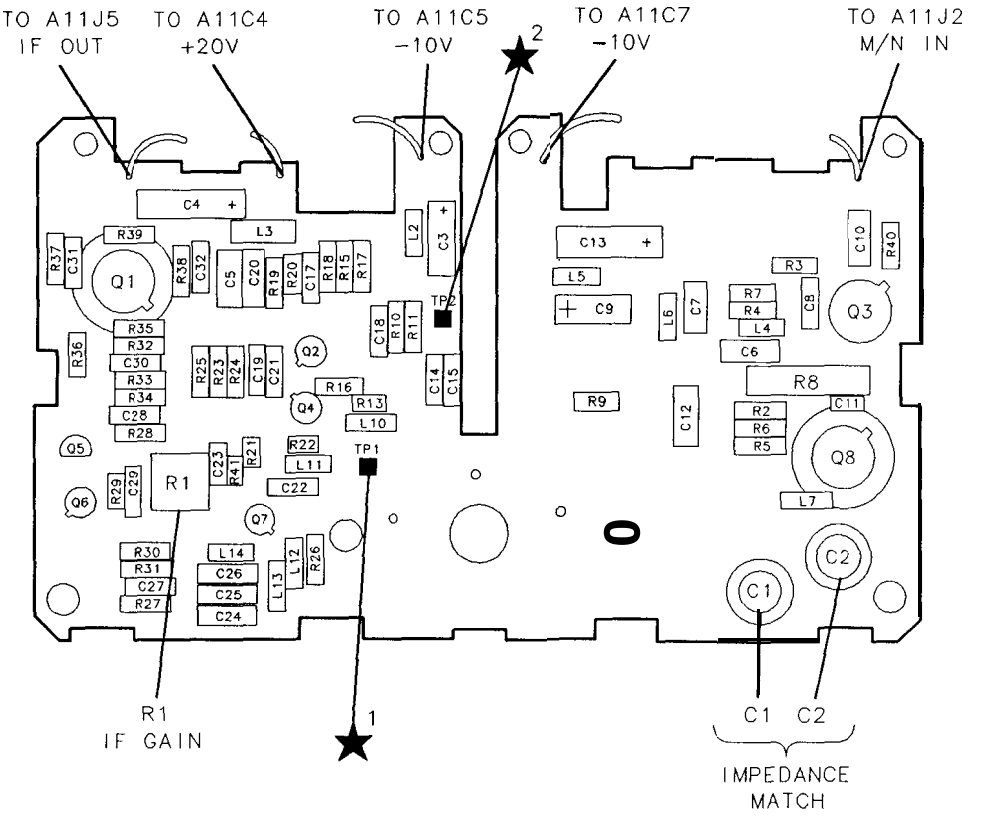

A11A5 Sampler Component Locations, 85660-60199

RF SECTION

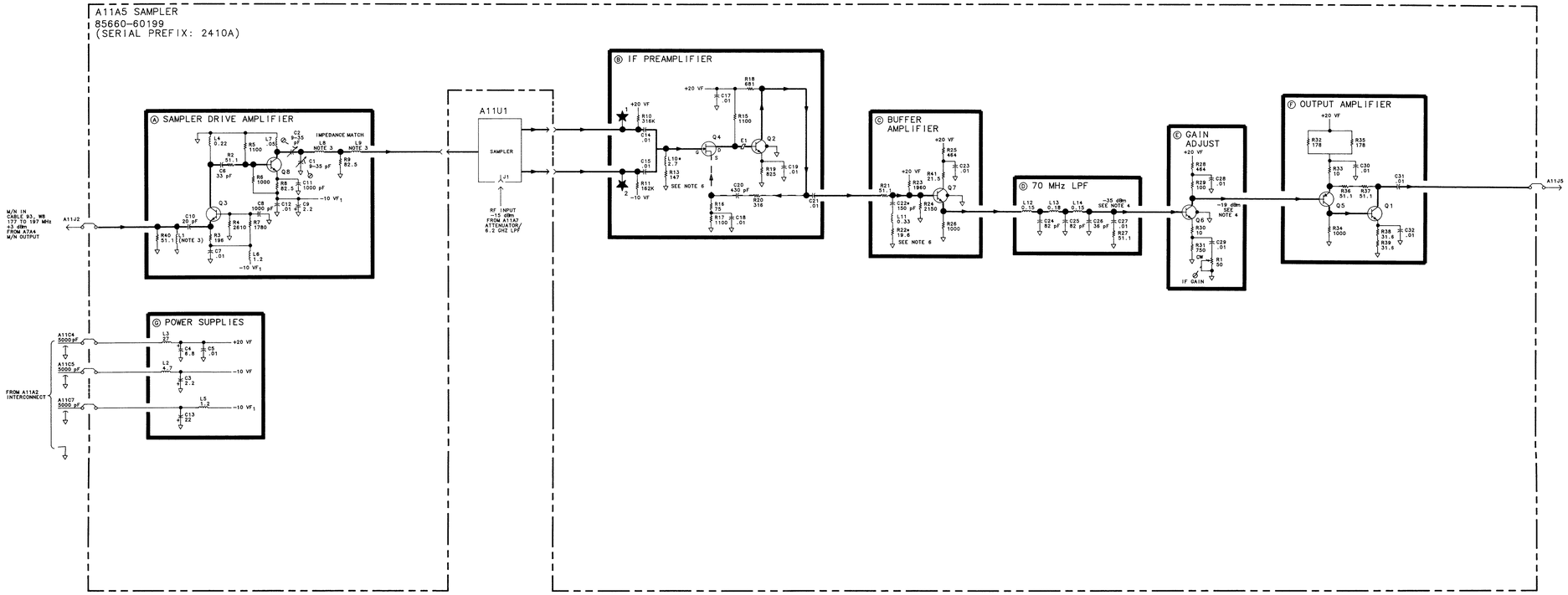

NOTES:

1. REFERENCE DESIGNATORS WITHIN THIS ASSEMBLY ARE ABBREVIATED. FOR COMPLETE REFERENCE DESIGNATION, PREFIX ABBREVIATION WITH ASSEMBLY DESIGNATION.

2. UNLESS OTHERWISE INDICATED: RESISTANCE IS IN OHMS (Ω). CAPACITANCE IS IN MICROFARADS (UF) INDUCTANCE IS IN MICROHENRIES (UH)

3. STRIP LINE INDUCTORS
   L1: .05 IN. WIDE, 2.80 IN. LONG
   L8: .1 IN. WIDE, 1.90 IN. LONG
   L9: .1 IN. WIDE, 1.00 IN. LONG

4. TYPICAL IF LEVELS MEASURED WITH A 5KΩ PROBE REFERRED TO A 50Ω UNLOADED SOURCE, WITH NORMAL OUTPUT LOAD AT J5.

5. UNLESS OTHERWISE INDICATED: SIGNALS ENTER AT LEFT SIDE AND EXIT AT RIGHT SIDE OF FUNCTION BLOCKS.

6. C22*, L10*, AND R22* ARE FACTORY-SELECTED COMPONENTS. ACCEPTABLE VALUES ARE LISTED BELOW:

IF OUT	COMPONENT	RANGE
CABLE 0, A11W4	C22*	130pF-220pF
20 TO 30 MHz	L10*	2.2UH-3.3UH
0 TO 16 dBm	R22*	15Ω-51.1Ω
TO A11A2 YTO PHASE DETECTOR		

A11 A5

A11A5 SAMPLER, SCHEMATIC DIAGRAM

A12

A12 Front-Panel Interface, Circuit Description

Al2 Front-Panel Interface contains the miscellaneous digital functions for interfacing with the Al5 Controller.

Keyboard Matrix Ⓐ

The keyboard is organized as a matrix (rows and columns) of normally open SPST switches. The rows are driven by U2 and U3. U6 functions as a key-down detector. Q2 and associated circuitry debounce the key switches, and U14B latches the key-down condition. U1 and U4 gate the key columns onto the Data Bus. By selectively enabling the key rows, Al5 Controller can poll the keyboard.

Oven Cold Sensor Ⓑ

When U22 senses the oven line is less than +17 V, it tells the Controller that the oven is no longer cold.

Rotary Pulse Generator (RPG) Control Ⓒ

U11B enables the RPG, allowing the pulses to be counted. U11A detects the direction of rotation of the RPG (rotation of the DATA knob on the front panel). U18 and U19 count the number of RPG pulses since the last RPG RESET. U28 provides a holdoff of about 200 ms, until service is requested, giving the instrument time to respond to the last request and to continue to sweep before the next request occurs; that is, to give the operator visual feedback.

Service Request Ⓓ

This circuit encodes the various requests for service for the Al5 Controller.

U24 encodes the service request. U27 is a change detector (HXRF or LRMT), and U25 latches these changes. U14A detects and latches the falling edge of HSWP.

U13 also provides the reset pulses for clearing the request latches U14A, U14B, U16A, U25A, and U25B. U16B is cleared by any pending request (that is, it restarts Al5 Controller) by U24.

Q3 pulls HSWP low whenever a request is pending.

U12 gates the encoded request and also places HXRF or LHBZ on the Data Bus.

M/N Storage Ⓔ

Each flag can be enabled (interrogated), or all flags can be enabled. U30 and U32 provide the logic, and U20 stores the state of the enabled flags.

Address Decoder Ⓖ

U7, U10, and U33 decode the address lines, enabling the appropriate ICs to gate or store data for the Data Bus.

Attenuator Correction Rom Ⓗ

U8 is a PROM (programmable read-only memory) that contains the attenuation errors (calibration data) of the RF attenuator.

Control Lines Ⓘ

U9 controls certain mainframe functions, such as turning off the internal reference oscillator (IISTD).

Options Ⓙ

U21 gates the Options jumpers onto the Data Bus.

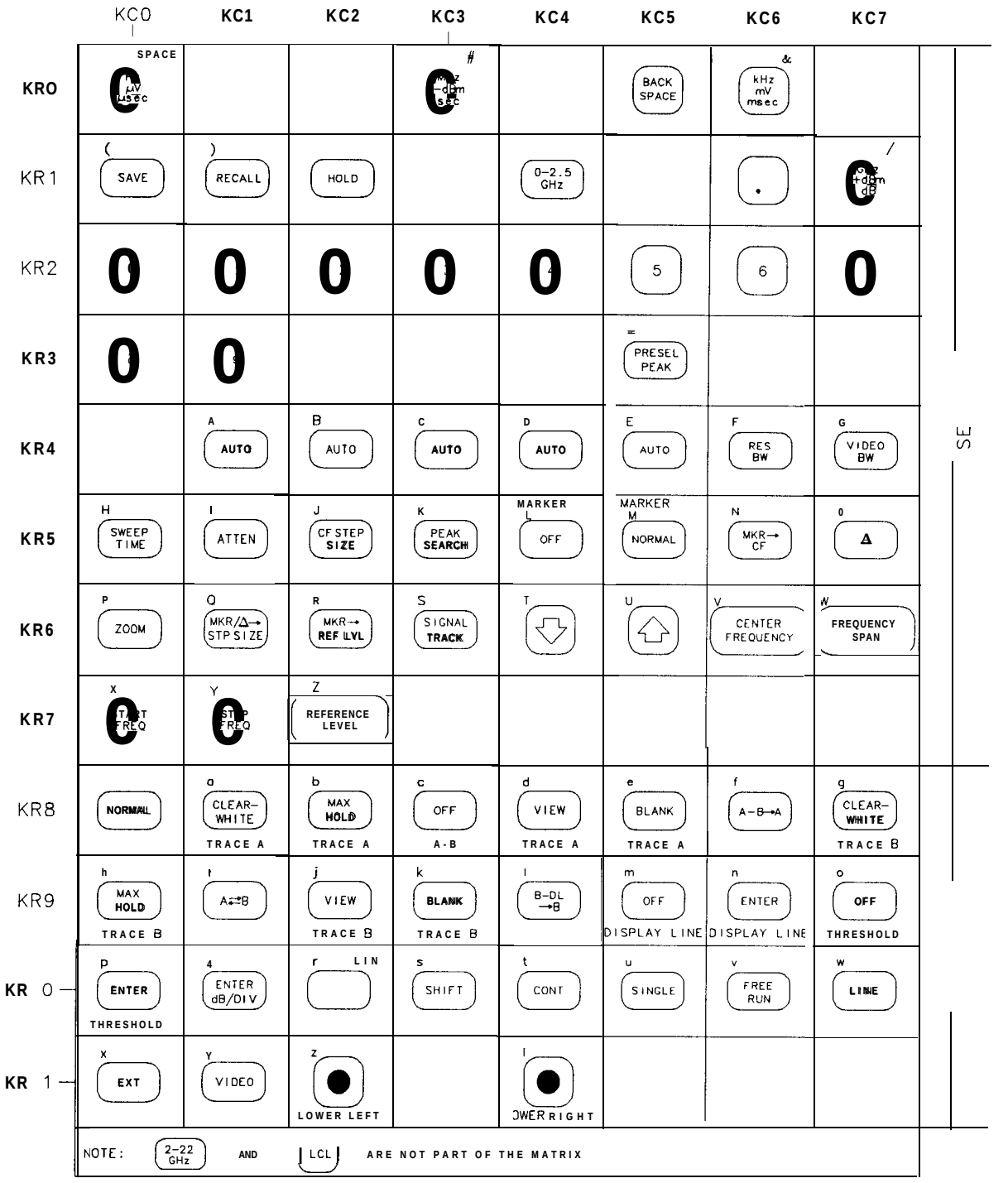

Figure 1. HP 8566 Keyboard Matrix

Table 1. Mnemonics Listing for RF Section

Mnemonic	Active State	Description
ADRO-4		Address Bits 0 through 4
ATN*	LOW	Attention True
BFC ON		Filter Capacitor IN
DAV*	LOW	Data Valid
DIO1-8	LOW	HP-IB Data Input/Output Bits
EOI*	LOW	End or Identify
HLE2	HIGH	Phase Lock Loop 2 Lock Enable
HLEY	HIGH	YTO Lock Enable
HOVH	IIIGH	Oven Cold
HPON	HIGH	Power ON to IF-Display Section
HPUP	HIGH	Power Up
HSTD	HIGH	10 MHz Standard ON
HSWP	HIGH	Sweeping
HUL1	HIGH	Phase Lock Loop 1 or 3 Unlocked
HUL2	HIGH	Phase Lock Loop 2 Unlocked
HULH	HIGH	Heterodyne Oscillator Unlocked
HULM	HIGH	M/N Unlocked
EIULR	HIGH	REF Unlocked
HULY	HIGH	YTO Unlocked
HXRF	HIGH	External Reference
HYGH	AIGII	YTO Loop Gain High
IFC*	LOW	Interface Clear
IOB0-15	HIGII	Instrument Bus Data Bits
KCO-7		Key Columns 0 through 7
KRO-11		Key Rows 0 through 11
LADR	LOW	Address LED ON
LANR	LOW	Analog Reset
LAOS	LOW	Aux Out Strobe
LBIO	LOW	RF Section I/O Strobe
LDAS	LOW	DAC Strobe
LIPS	LOW	Instrument Preset
LLED	LOW	LED Strobe
LMNE	LOW	M/N Output Enable
LRMT	LOW	Remove (High=Local)
LROM1-3	LOW	Enable ROM 3-State Outputs
LRTL	LOW	Local Button Pushed

Table 1. Mnemonics Listing for RF Section (continued)

Mnemonic	Active State	Description
LSAS	LOW	Scan Attenuator Strobe
LSBY	HIGH	Standby
LSRQ	LOW	Service Request
LSTP	LOW	Stop Al5 Controller
LSTS	LOW	Scan Time Strobe
LTGR	LOW	Tracking Generator Request
LTIO	LOW	[F-Display Section I/O Strobe
LYSP	LOW	YTO Span
Ml-5		M/N Loop-M Inputs
Nl-6		M/N Loop-N Inputs
N DAC*	HIGH	Data Accepted
N RFD*	HIGH	Ready for Data
REN*	LOW	Remote Enable
RPG1		Rotary Pulse
RPG2		Generator Lines
SAT1		Scan Integer
SAT2		Attenuator
SRQ*	LOW	Service Request
SW1		Switch 1 (A10A7)
SW2		Switch 2 (A10A7)

* HP-IB Mnemonics

HP Part Number 85660-60211

Al2 Front Panel Interface

Reference Designation	HP Part Number	C D	Qty	Description	Mfr Code	Mfr Part Number
Al.2	85660-60211	3	1	BOARD ASSEMBLY, FRONT PANEL INTERFACE (SERIAL PREFIXES: 2410A-2430A)	28480	85660-60211
A12C1	0180-0197	8	1	CAPACITOR-FXD 2.2UF+-10% 20VDC TA	56289	150D225X9020A2
A12C2	0180-0197	a	1	CAPACITOR-FXD 2.2UF+-10% 20VDC TA	56289	150D225X9020A2
A12C3	0180-0197	8	1	CAPACITOR-FXO 2.2UF+-10% 20VDC TA	56289	150D225X9020A2
A12C4	0160-4835	7	1	CAPACITOR-FXD .1UF +-lo% 50VDC CER	04222	SA115C104KAAH
A12C5	0180-2683	1	1	CAPACITOR-FXD 4.7UF 35VDC TA	28480	0180-2683
A12C6	0180-0373	2	1	CAPACITOR-FXD .68UF+-10% 35VDC TA	56289	150D684X9035A2
A12C7	0160-4832	4	1	CAPACITOR-FXD .01UF +-lo% 100VDC CER	04222	SA101C103KAAH
A12C8	0160-4574	1	1	CAPACITOR-FXD 1000PF +-lo% 100VDC CER	04222	SA101C102KAAH
A12C9	0160-4574	1	1	CAPACITOR-FXD 1000PF +-lo% 100VDC CER	04222	SA101C102KAAH
A12C10	0160-0571	0	1	CAPACITOR-FXD 470PF +-20% 100VDC CER	04222	SR201C471MAAH
A12C11	0160-4574	1	1	CAPACITOR-FXD 1000PF +-lo% 100VDC CER	04222	SA101C102KAAH
A12CR1	1901-0040	1	1	DIODE-SWITCHING 30V 50MA 2NS DO-35	71468	
A12CR2	1901-0040	1	1	DIODE-SWITCHING 30V 50MA 2NS DO-35	71468	
A12CR3	1901-0040	1	1	DIODE-SWITCHING 30V 50MA 2NS DO-35	71468	
A12CR4	1901-0518	8	1	DIODE-SCHOTTKY SM SIG		5082-2800
A12CR5	1901-0518	8	1	DIODE-SCHOTTKY SM SIG		5082-2800
A12L1	08558-80011	6	1	FILTER COIL BLUE	28480	08558-80011
A12MP2	1200-0812	9	1	SOCKET-IC 16-CONT DIP DIP-SLDR	28480	1200-0812
A12MP4	1480-0073	6	2	PIN-ROLL .062 DIA .25 IN LG	72962	99-012-062-0250
A12MP5	4040-0749	4	1	EXTR PC BD BRN	28480	4040-0749
A12MP6	4040-0750	7	1	EXTR PC BD RED	28480	4040-0750
A12Q1	1854-0404	0	1	TRANSISTOR NPN SI TO-18 PD=360MW	04713	
A12Q2	1854-0404	0	1	TRANSISTOR NPN SI TO-18 PD=360MW	04713	
A12Q3	1854-0404	0	1	TRANSISTOR NPN SI TO-18 PD=360MW	04713	
A12R1	0698-7281	2	1	RESISTOR 75K +-2% .05W TF TC=O+-100	19701	5023R
A12R2	0698-7268	5	1	RESISTOR 21.5K +-1% .05W TF TC=O+-100	19701	50635
A12R3	0698-7251	6	1	RESISTOR 4.22K +-1% .05W TF TC=O+-100	19701	50635
A12R4	0698-7272	1	1	RESISTOR 31.6K +-1% .05W TF TC=O+-100	19701	50635
A12R5	0698-7260	7	1	RESISTOR 10K +-1% .05W TF TC=O+-100	19701	50635
A12R6	0698-7260	7	1	RESISTOR 10K +-1% .05W TF TC=O+-100	19701	50635
A12R7	0698-7268	5	1	RESISTOR 21.5K +-1% .05W TF TC=O+-100	19701	50635
A12R8	0757-0442	9	1	RESISTOR 10K +-1% .125W TF TC=O+-100	19701	SFR25H
A12R9	0757-0442	9	1	RESISTOR 10K +-1% .125W TF TC=O+-100	19701	SFR25H
A12R10	0757-0442	9	1	RESISTOR 10K +-1% .125W TF TC=O+-100	19701	SFR25H
A12R11	0757-0442	9	1	RESISTOR 10K +-1% .125W TF TC=O+-100	19701	SFR25H
A12R12	0757-0442	9	1	RESISTOR 10K +-1% .125W TF TC=O+-100	19701	SFR25H
A12R13	0698-7243	6	1	RESISTOR 1.96K +-1% .05W TF TC=O+-100	19701	50633
A12R14	0698-7243	6	1	RESISTOR 1.96K +-1% .05W TF TC=O+-100	19701	50635
A12R15	0698-7243	6	1	RESISTOR 1.96K +-1% .05W TF TC=O+-100	19701	50635
A12R16	0698-7243	6	1	RESISTOR 1.96K +-1% .05W TF TC=O+-100	19701	50635
A12R17	0698-7236	7	1	RESISTOR 1K +-1% .05W TF TC=O+-100	19701	50635
A12R18	0757-0442	9	1	RESISTOR 10K +-1% .125W TF TC=O+-100	19701	SFR25H
A12R19	0698-7243	6	1	RESISTOR 1.96K +-1% .05W TF TC=O+-100	19701	50635
A12R20	0757-0442	9	1	RESISTOR 10K +-1% .125W TF TC=O+-100	19701	SFR25H
A12R21	0698-7260	7	1	RESISTOR 10K +-1% .05W TF TC=O+-100	19701	50635

**Indicates factory-selected value*

HP Part Number 85660-60211

Al2 Front Panel Interface

Reference Designation	HP Part Number	C D	Qty	Description	Mfr Code	Mfr Part Number
A12R22	)698-7260	7	1	RESISTOR 10K +-1% .05W TF TC=O+-100	19701	50635
A12R23	)698-7243	6	1	RESISTOR 1.96K +-1% .05W TF TC=O+-100	19701	50635
A12R24	)698-7260	7	1	RESISTOR 10K +-1% .05W TF TC=O+-100	19701	50635
A12R25	)698-7243	6	1	RESISTOR 1.96K +-1% .05W TF TC=O+-100	19701	50635
A12R26	)757-0442	9	1	RESISTOR 10K +-1% .125W TF TC=O+-100	19701	SFR25H
A12R27	)698-0083	a	1	RESISTOR 1.96K 1% .125W TF TC=O+-100	19701	SFR25H
A12R28	1698-3454	3	1	RESISTOR 215K 1% .125W TF TC=O+-100	19701	SFR25H
A12R29	1698-7243	6	1	RESISTOR 1.96K +-1% .05W TF TC=O+-100	19701	50635
A12R30	)698-0083	a	1	RESISTOR 1.96K 1% .125W TF TC=O+-100	19701	SFR25H
A12R31	1757-0442	9	1	RESISTOR 10K +-1% .125W TF TC=O+-100	19701	SFR25H
A12R32	1698-7236	7	1	RESISTOR 1K +-1% .05W TF TC=O+-100	19701	50635
A12R33	)698-7217	4	1	RESISTOR 162 +-1% .05W TF TC=O+-100	19701	50635
A12TP1	1251-5177	6	1	CONNECTOR-SGL CONT PIN .031-IN-BSC-SZ		460-2984-02-03-00
A12TP2	1251-5177	6	1	CONNECTOR-SGL CONT PIN .031-IN-BSC-SZ		460-2984-02-03-00
A12TP3	1251-5177	6	1	CONNECTOR-SGL CONT PIN .031-IN-BSC-SZ		460-2984-02-03-00
A12U1	l820-1491	6	1	IC BFR TTL LS NON-INV HEX l-INP	01295	SN74LS367AN
A12U2	1820-1196	a	1	IC FF TTL LS O-TYPE POS-EDGE-TRIG COM CL	01295	SN74LS174N
A12U3	1820-1196	a	1	IC FF TTL LS O-TYPE POS-EDGE-TRIG COM CL	01295	SN74LS174N
A12U4	l820-1491	6	1	IC BFR TTL LS NON-INV HEX l-INP	01295	SN74LS367AN
A12U5	1810-0206	a	1	NETWORK-RES 8-SIP 10.0K OHM X 7	11236	750-81
A12U6	l820-1207	2	1	IC GATE TTL LS NAND 8-INP	01295	SN74LS30N
A12U7	l820-1202	7	1	IC GATE TTL LS NAND TPL 3-INP	01295	SN74LS10N
A12U8				P/O A6A2 NOT SEPARATELY REPLACEABLE		
A12U9	1820-1196	a	1	IC FF TTL LS O-TYPE POS-EDGE-TRIG COM CL	01295	SN74LS174N
A12U10	1820-1216	3	1	IC OCOR TTL LS 3-TO-8-LINE 3-INP	01295	SN74LS138N
A12U11	l820-1112	8	1	IC FF TTL LS O-TYPE POS-EDGE-TRIG PRESET	01295	SN74LS74AN
A12U12	l820-1492	7	1	IC BFR TTL LS INV HEX 1-INP	01295	SN74LS368AN
A12U13	l820-1216	3	1	IC OCOR TTL LS 3-TO-8-LINE 3-INP	01295	SN74LS138N
A12U14	l820-1112	8	1	IC FF TTL LS O-TYPE POS-EDGE-TRIG PRESET	01295	SN74LS74AN
A12U15	l820-1199	1	1	IC INV TTL LS HEX l-INP	01295	SN74LS04N
A12U16	l820-1112	8	1	IC FF TTL LS O-TYPE POS-EDGE-TRIG PRESET	01295	SN74LS74AN
A12U17	l820-1199	1	1	IC INV TTL LS HEX l-INP	01295	SN74LS04N
A12U18	l820-2270	1	1	IC CNTR TTL LS BIN UP/DOWN SYNCHRO POS-E	34335	AM25LS2569DC
A12U19	l820-2270	1	1	IC CNTR TTL LS BIN UP/DOWN SYNCHRO POS-E	34335	AM25LS2569DC
A12U20	1820-1196	a	1	IC FF TTL LS O-TYPE POS-EDGE-TRIG COM CL	01295	SN74LS174N
A12U21	l820-1491	6	1	IC BFR TTL LS NON-INV HEX l-INP	01295	SN74LS367AN
A12U22	1826-0161	7	1	IC OP AMP GP QUAD 14-DIP-P PKG	27014	LM324N
A12U23	l820-1425	6	1	IC SCHMITT-TRIG TTL LS NAND QUAD 2-INP	01295	SN74LS132N
A12U24	l820-1851	2	1	ICLS 148 P ENCODER a INPUT - 3 OUTPUT		
A12U25	l820-1440	5	1	IC LCH TTL LS QUAD	01295	SN74LS279AN
A12U26	1820-1196	8	1	IC FF TTL LS O-TYPE POS-EDGE-TRIG COM CL	01295	SN74LS174N
A12U27	l820-1211	8	1	IC GATE TTL LS EXCL-OR QUAD E-INP	01295	SN74LS86AN
A12U28	l826-0180	0	1	IC TIMER TTL MONO/ASTBL	la324	NE555N
A12U29	.820-1196	8	1	IC FF TTL LS O-TYPE POS-EDGE-TRIG COM CL	01295	SN74LS174N
A12U30	.820-1210	7	1	IC GATE TTL LS AND-OR-INV DUAL 2-INP	01295	SN74LS51N
A12U31	.810-0206	8	1	NETWORK-RES 8-SIP 10.0K OHM X 7	11236	750-81
A12U32	.820-1210	7	1	IC GATE TTL LS AND-OR-INV DUAL E-INP	01295	SN74LS51N
A12U33	.820-1216	3	1	IC OCOR TTL LS 3-TO-8-LINE 3-INP	01295	SN74LS138N

**Indicates factory-selected value*

HP Part Number 85660-60211

Al2 Front Panel interface

Reference Designation	HP Part Number	C D	Qty	Description	Mfr Code	Mfr Part Number
A12W2	0757-0346	2	1	RESISTOR 10 +-1% .125W TF TC=0+-100	91637	CMF-55-1, T-1

**Indicates factoy-selected value*

HP Part Number 85660-60246

Al2 Front Panel Interface

Reference Designation	HP Part Number	C D	Qty	Description	Mfr Code	Mfr Part Number
A12	85660-60246	4	1	BOARD ASSEMBLY, FRONT PANEL INTERFACE (SERIAL PREFIXES: 2449A - 2613A)	28480	85660-60246
A12C1	0180-0197	a	1	CAPACITOR-FXO 2.2UF+-10% 20VOC TA	56289	150D225X9020A2-DYS
A12C2	0180-0197	a	1	CAPACITOR-FXO 2.2UF+-10% 20VOC TA	56289	150D225X9020A2-DYS
A12C3	0180-0197	a	1	CAPACITOR-FXO 2.2UF+-10% 20VOC TA	56289	150D225X9020A2-DYS
A12C4	0160-4835	7	1	CAPACITOR-FXO .1UF +-1o% 50VDC CER	04222	SA115C104KAAH
A12C5	0180-2683	1	1	CAPACITOR-FXO 4.7UF+-20% 35VOC TA	04222	MD6-035-475-20/9038
A12C6	0180-0373	2	1	CAPACITOR-FXO .68UF+-10% 35VOC TA	56289	150D684X9035A2-DYS
A12C7	0160-4832	4	1	CAPACITOR-FXO .01UF +-10% 100VDC CER	04222	SA101C103KAAH
A12C8	0160-4574	1	1	CAPACITOR-FXO 1000PF +-1o% 100VDC CER	04222	SA101C102KAAH
A12C9	0160-4574	1	1	CAPACITOR-FXO 1000PF +-10% 100VDC CER	04222	SA101C102KAAH
A12C10	0160-0571	0	1	CAPACITOR-FXO 470PF +-20% 100VDC CER	04222	SR201C471MAAH
A12C11	0160-4574	1	1	CAPACITOR-FXO 1000PF +-1o% 100VDC CER	04222	SA101C102KAAH
A12CR1	1901-0040	1	1	DIODE-SWITCHING 30V 50MA 2NS DO-35	71468	
A12CR2	1901-0040	1	1	DIODE-SWITCHING 30V 50MA 2NS DO-35	71468	
A12CR3	1901-0040	1	1	DIODE-SWITCHING 30V 50MA 2NS DO-35	71468	
A12CR4	1901-0518	a	1	DIODE-SCHOTTKY SM SIG		5082-2800
A12CR5	1901-0518	a	1	DIODE-SCHOTTKY SM SIG		5082-2800
A12L1	08558-80011	6	1	INDUCTOR BLUE COIL	28480	08558-80011
A12MP1				NOT ASSIGNED		
A12MP2	1200-0812	9	1	SOCKET-IC 16-CONT DIP DIP-SLOR	91506	716-AG1D
A12MP4	1480-0073	6	1	PIN-ROLL .062-IN-DIA .25-IN-LG BE-CU	72962	99-012-062-0250
A12MP5	4040-0749	4	1	EXTR-PC BO BRN POLYC .062-IN-BD-THKNS 1-	28480	4040-0749
A12MP6	4040-0750	7	1	EXTR-PC BO RED POLYC .062-IN-BD-THKNS 1-	28480	4040-0750
A12Q1	1854-0404	0	1	TRANSISTOR NPN SI TO-18 PD=360MW	04713	
A12Q2	1854-0404	0	1	TRANSISTOR NPN SI TO-18 PD=360MW	04713	
A12Q3	1854-0404	0	1	TRANSISTOR NPN SI TO-18 PD=360MW	04713	
A12R1	0698-7281	2	1	RESISTOR 75K +-2% .05W TF TC=O+-100	19701	5023R
A12R2	0698-7268	5	1	RESISTOR 21.5K +-1% .05W TF TC=O+-100	19701	50635
A12R3	0698-7251	6	1	RESISTOR 4.22K +-1% .05W TF TC=O+-100	19701	50635
A12R4	0698-7272	1	1	RESISTOR 31.6K +-1% .05W TF TC=O+-100	19701	50635
A12R5	0698-7260	7	1	RESISTOR 10K +-1% .05W TF TC=O+-100	19701	50635
A12R6	0698-7260	7	1	RESISTOR 10K +-1% .05W TF TC=O+-100	19701	50633
A12R7	0698-7268	5	1	RESISTOR 21.5K +-1% .05W TF TC=O+-100	19701	50635
A12R8	0757-0442	9	1	RESISTOR 10K +-1% .125W TF TC=O+-100	19701	SFR25H
A12R9	0757-0442	9	1	RESISTOR 10K +-1% .125W TF TC=O+-100	19701	SFR25H
A12R10	0757-0442	9	1	RESISTOR 10K +-1% .125W TF TC=O+-100	19701	SFR25H
A12R11	0757-0442	9	1	RESISTOR 10K +-1% .125W TF TC=O+-100	19701	SFR25H
A12R12	0757-0442	9	1	RESISTOR 10K +-1% .125W TF TC=O+-100	19701	SFR25H
A12R13	0698-7243	6	1	RESISTOR 1.96K +-1% .05W TF TC=O+-100	19701	50635
A12R14	0698-7243	6	1	RESISTOR 1.96K +-1% .05W TF TC=O+-100	19701	50635
A12R15	0698-7243	6	1	RESISTOR 1.96K +-1% .05W TF TC=O+-100	19701	50635
A12R16	0698-7243	6	1	RESISTOR 1.96K +-1% .05W TF TC=O+-100	19701	50635
A12R17	0698-7236	7	1	RESISTOR 1K +-1% .05W TF TC=O+-100	19701	50635
A12R18	0757-0442	9	1	RESISTOR 10K +-1% .125W TF TC=O+-100	19701	SFR25H
A12R19	0698-7243	6	1	RESISTOR 1.96K +-1% .05W TF TC=O+-100	19701	50635
A12R20	0757-0442	9	1	RESISTOR 10K +-1% .125W TF TC=O+-100	19701	SFR25H

**Indicates factoy-selected value*

HP Part Number 85660-60246

Al2 Front Panel Interface

Reference Designation	HP Part Number	CD	Qty	Description	Mfr Code	Mfr Part Number
A12R21	0698-7260	7	1	RESISTOR 10K +-1% .05W TF TC=O+-100	19701	50635
A12R22	0698-7260	7	1	RESISTOR 10K +-1% .05W TF TC=O+-100	19701	50635
A12R23	0698-7243	6	1	RESISTOR 1.96K +-1% .05W TF TC=O+-100	19701	50635
A12R24	0698-7260	7	1	RESISTOR 10K +-1% .05W TF TC=O+-100	19701	50635
A12R25	0698-7243	6	1	RESISTOR 1.96K +-1% .05W TF TC=O+-100	19701	50635
A12R26	0757-0442	9	1	RESISTOR 10K +-1% .125W TF TC=O+-100	19701	SFR25H
A12R27	3698-0083	a	1	RESISTOR 1.96K 1% .125W TF TC=O+-100	19701	SFR25H
A12R28	0698-3454	3	1	RESISTOR 215K 1% .125W TF TC=O+-100	19701	SFR25H
A12R29	0698-7243	6	1	RESISTOR 1.96K +-1% .05W TF TC=O+-100	19701	50635
A12R30	0698-0083	a	1	RESISTOR 1.96K 1% .125W TF TC=O+-100	19701	SFR25H
A12R31	0757-0442	9	1	RESISTOR 10K +-1% .125W TF TC=O+-100	19701	SFR25H
A12R32	0698-7236	7	1	RESISTOR 1K +-1% .05W TF TC=O+-100	19701	50635
A12R33	0698-7217	4	1	RESISTOR 162 +-1% .05W TF TC=O+-100	19701	50635
A12TP1	1251-5177	6	1	CONNECTOR-SGL CONT PIN .031-IN-BSC-SZ		460-2984-02-03-00
A12TP2	1251-5177	6	1	CONNECTOR-SGL CONT PIN .031-IN-BSC-SZ		460-2984-02-03-00
A12TP3	1251-5177	6	1	CONNECTOR-SGL CONT PIN .031-IN-BSC-SZ		460-2984-02-03-00
A12U1	1820-1491	6	1	IC BFR TTL LS NON-INV HEX I-INP	01295	SN74LS367AN
A12U2	1820-1196	a	1	IC FF TTL LS O-TYPE POS-EDGE-TRIG COM CL	01295	SN74LS174N
A12U3	1820-1196	a	1	IC FF TTL LS O-TYPE POS-EDGE-TRIG COM CL	01295	SN74LS174N
A12U4	1820-1491	6	1	IC BFR TTL LS NON-INV HEX l-INP	01295	SN74LS367AN
A12U5	1810-0206	a	1	NETWORK-RES 8-SIP 10.0K OHM X 7	11236	750-81
A12U6	1820-1207	2	1	IC GATE TTL LS NAND 8-INP	01295	SN74LS30N
A12U7	1820-1202	7	1	IC GATE TTL LS NAND TPL 3-INP	01295	SN74LS10N
A12U8				P/O A6A2 NOT SEPARATELY REPLACEABLE		
A12U9	1820-1196	a	1	IC FF TTL LS O-TYPE POS-EDGE-TRIG COM CL	01295	SN74LS174N
A12U10	1820-1216	3	1	IC OCOR TTL LS 3-TO-8-LINE 3-INP	01295	SN74LS138N
A12U11	1820-1112	8	1	IC FF TTL LS O-TYPE POS-EDGE-TRIG PRESET	01295	SN74LS74AN
A12U12	1820-1492	7	1	IC BFR TTL LS INV HEX I-INP	01295	SN74LS368AN
A12U13	1820-1216	3	1	IC OCOR TTL LS 3-TO-8-LINE 3-INP	01295	SN74LS138N
A12U14	1820-1112	8	1	IC FF TTL LS O-TYPE POS-EDGE-TRIG PRESET	01295	SN74LS74AN
A12U15	1820-1199	1	1	IC INV TTL LS HEX l-INP	01295	SN74LS04N
A12U16	1820-1112	8	1	IC FF TTL LS O-TYPE POS-EDGE-TRIG PRESET	01295	SN74LS74AN
A12U17	1820-1199	1	1	IC INV TTL LS HEX l-INP	01295	SN74LS04N
A12U18	1820-2270	1	1	IC CNTR TTL LS BIN UP/DOWN SYNCHRO POS-E	34335	AM25LS2569DC
A12U19	1820-2270	1	1	IC CNTR TTL LS BIN UP/DOWN SYNCHRO POS-E	34335	AM25LS2569DC
A12U20	1820-1196	8	1	IC FF TTL LS O-TYPE POS-EDGE-TRIG COM CL	01295	SN74LS174N
A12U21	1820-1491	6	1	IC BFR TTL LS NON-INV HEX I-INP	01295	SN74LS367AN
A12U22	1826-0161	7	1	IC OP AMP GP QUAD 14-DIP-P PKG	27014	LM324N
A12U23	1820-1425	6	1	IC SCHMITT-TRIG TTL LS NAND QUAD 2-INP	01295	SN74LS132N
A12U24	1820-1851	2	1	IC ENCOR TTL LS	01295	SN74LS148N
A12U25	1820-1440	5	1	IC LCH TTL LS QUAD	01295	SN74LS279AN
A12U26	1820-1196	8	1	IC FF TTL LS O-TYPE POS-EDGE-TRIG COM CL	01295	SN74LS174N
A12U27	1820-1211	8	1	IC GATE TTL LS EXCL-OR QUAD 2-INP	01295	SN74LS86AN
A12U28	1826-0180	0	1	IC TIMER TTL MONO/ASTBL	la324	NE555N
A12U29	1820-1196	8	1	IC FF TTL LS O-TYPE POS-EDGE-TRIG COM CL	01295	SN74LS174N
A12U30	1820-1210	7	1	IC GATE TTL LS AND-OR-INV DUAL 2-INP	01295	SN74LS51N
A12U31	1810-0206	a	1	NETWORK-RES 8-SIP 10.0K OHM X 7	11236	750-81
A12U32	1820-1210	7	1	IC GATE TTL LS AND-OR-INV DUAL 2-INP	01295	SN74LS51N

**Indicates factory-selected value*

HP Part Number 85660-60246

Al2 Front Panel Interface

Reference Designation	HP Part Number	C D	Qty	Description	Mfr Code	Mfr Part Number
A12U33	1820-1216	3	1	IC OCOR TTL LS 3-TO-8-LINE 3-INP	01295	SN74LS138N
A12W2	)757-0346	2	1	RESISTOR 10 +-1% .125W TF TC=O+-100	91637	CMF-55-1, T-l

**Indicates factory-selected value*

HP Part Number 85660-60290

Al2 Front Panel Interface

Reference Designation	HP Part Number	CD	Qty	Description	Mfr Code	Mfr Part Number
Al2	85660-60290	4	1	BOARD ASSEMBLY, FRONT PANEL INTERFACE (SERIAL PREFIX: 2618A)	28480	85660-60290
A12C1	0180-0197	a	1	CAPACITOR-FXO 2.2UF+-10% 20VOC TA	56289	150D225X9020A2-DYS
A12C2	0180-0197	a	1	CAPACITOR-FXO 2.2UF+-10% 20VOC TA	56289	150D225X9020A2-DYS
A12C3	0180-0197	a	1	CAPACITOR-FXO 2.2UF+-10% 20VOC TA	56289	150D225X9020A2-DYS
A12C4	0160-4835	7	1	CAPACITOR-FXO .1UF +-10% 50VOC CER	04222	SA115C104KAAH
A12C5	0180-2683	1	1	CAPACITOR-FXO 4.7UF+-20% 35VOC TA	04222	MD6-035-475-20/9038
A12C6	0180-0373	2	1	CAPACITOR-FXO .68UF+-10% 35VOC TA	56289	150D684X9035A2-DYS
A12C7	0160-4832	4	1	CAPACITOR-FXO .01UF +-lo% 100VDC CER	04222	SA101C103KAAH
A12C8	0160-4574	1	1	CAPACITOR-FXO 1000PF +-lo% 100VDC CER	04222	SA101C102KAAH
A12C9	0160-4574	1	1	CAPACITOR-FXO 1000PF +-lo% 100VDC CER	04222	SA101C102KAAH
A12C10	0160-0571	0	1	CAPACITOR-FXO 470PF +-20% 100VDC CER	04222	SR201C471MAAH
A12C11	0160-4574	1	1	CAPACITOR-FXO 1000PF +-lo% 100VDC CER	04222	SA101C102KAAH
A12CR1	1901-0040	1	1	DIODE-SWITCHING 30V 50MA 2NS DO-35	71468	
A12CR2	1901-0040	1	1	DIODE-SWITCHING 30V 50MA 2NS DO-35	71468	
A12CR3	1901-0040	1	1	DIODE-SWITCHING 30V 50MA 2NS DO-35	71468	
A12CR4	1901-0518	a	1	DIODE-SCHOTTKY SM SIG		5082-2800
A12L1	08558-80011	6	1	INDUCTOR BLUE COIL	28480	08558-80011
A12MP1				NOT ASSIGNED		
A12MP2	1200-0812	9	1	SOCKET-IC 16-CONT DIP DIP-SLOR	91506	716-AG1D
A12MP4	1480-0073	6	1	PIN-ROLL .062-IN-DIA .25-IN-LG BE-CU	72962	99-012-062-0250
A12MP5	4040-0749	4	1	EXTR-PC BO BRN POLYC .062-IN-BD-THKNS 1-	28480	4040-0749
A12MP6	4040-0750	7	1	EXTR-PC BO RED POLYC .062-IN-BD-THKNS 1-	28480	4040-0750
A12Q1	1854-0404	0	1	TRANSISTOR NPN SI TO-18 PD=360MW	04713	
A12Q2	1854-0404	0	1	TRANSISTOR NPN SI TO-18 PD=360MW	04713	
A12Q3	1854-0404	0	1	TRANSISTOR NPN SI TO-18 PD=360MW	04713	
A12R1	0698-7281	2	1	RESISTOR 75K +-2% .05W TF TC=O+-100	19701	5023R
A12R2	0698-7268	5	1	RESISTOR 21.5K +-1% .05W TF TC=O+-100	19701	50635
A12R3	0698-7251	6	1	RESISTOR 4.22K +-1% .05W TF TC=O+-100	19701	50635
A12R4	0698-7272	1	1	RESISTOR 31.6K +-1% .05W TF TC=O+-100	19701	50635
A12R5	0698-7260	7	1	RESISTOR 10K +-1% .05W TF TC=O+-100	19701	50635
A12R6	0698-7260	7	1	RESISTOR 10K +-1% .05W TF TC=O+-100	19701	50635
A12R7	0698-7268	5	1	RESISTOR 21.5K +-1% .05W TF TC=O+-100	19701	50635
A12R8	0757-0442	9	1	RESISTOR 10K +-1% .125W TF TC=O+-100	19701	SFR25H
A12R9	0757-0442	9	1	RESISTOR 10K +-1% .125W TF TC=O+-100	19701	SFR25H
A12R10	0757-0442	9	1	RESISTOR 10K +-1% .125W TF TC=O+-100	19701	SFR25H
A12R11	0757-0442	9	1	RESISTOR 10K +-1% .125W TF TC=O+-100	19701	SFR25H
A12R12	0757-0442	9	1	RESISTOR 10K +-1% .125W TF TC=O+-100	19701	SFR25H
A12R13	0698-7243	6	1	RESISTOR 1.96K +-1% .05W TF TC=O+-100	19701	50635
A12R14	0698-7243	6	1	RESISTOR 1.96K +-1% .05W TF TC=O+-100	19701	50635
A12R15	0698-7243	6	1	RESISTOR 1.96K +-1% .05W TF TC=O+-100	19701	50635
A12R16	0698-7243	6	1	RESISTOR 1.96K +-1% .05W TF TC=O+-100	19701	50635
A12R17	0698-7236	7	1	RESISTOR 1K +-1% .05W TF TC=O+-100	19701	50635
A12R18	0757-0442	9	1	RESISTOR 10K +-1% .125W TF TC=O+-100	19701	SFR25H
A12R19	0698-7243	6	1	RESISTOR 1.96K +-1% .05W TF TC=O+-100	19701	50635
A12R20	0757-0442	9	1	RESISTOR 10K +-1% .125W TF TC=O+-100	19701	SFR25H
A12R21	0698-7260	7	1	RESISTOR 10K +-1% .05W TF TC=O+-100	19701	50635

**Indicates factory-selected value*

HP Part Number 85660-60290

Al2 Front Panel Interface

Reference Designation	HP Part Number	C D	Qty	Description	Mfr Code	Mfr Part Number
A12R22	0698-7260	7	1	RESISTOR 10K +-1% .05W TF TC=O+-100	19701	50635
A12R23	0698-7243	6	1	RESISTOR 1.96K +-1% .05W TF TC=O+-100	19701	50635
A12R24	0698-7260	7	1	RESISTOR 10K +-1% .05W TF TC=O+-100	19701	50635
A12R25	0698-7243	6	1	RESISTOR 1.96K +-1% .05W TF TC=O+-100	19701	50635
A12R26	0757-0442	9	1	RESISTOR 10K +-1% .125W TF TC=O+-100	19701	SFR25H
A12R27	0698-0083	a	1	RESISTOR 1.96K 1% .125W TF TC=O+-100	19701	SFR25H
A12R28	0698-3454	3	1	RESISTOR 215K 1% .125W TF TC=O+-100	19701	SFR25H
A12R29	0698-7243	6	1	RESISTOR 1.96K +-1% .05W TF TC=O+-100	19701	50635
A12R30	0698-0083	ε	1	RESISTOR 1.96K 1% .125W TF TC=O+-100	19701	SFR25H
A12R31	0757-0442	9	1	RESISTOR 10K +-1% .125W TF TC=O+-100	19701	SFR25H
A12R32	0698-7236	7	1	RESISTOR 1K +-1% .05W TF TC=O+-100	19701	50635
A12R33	0698-7217	4	1	RESISTOR 162 +-1% .05W TF TC=O+-100	19701	50635
A12TP1	1251-5177	6	1	CONNECTOR-SGL CONT PIN .031-IN-BSC-SZ		460-2984-02-03-00
A12TP2	1251-5177	6	1	CONNECTOR-SGL CONT PIN .031-IN-BSC-SZ		460-2984-02-03-00
A12TP3	1251-5177	6	1	CONNECTOR-SGL CONT PIN .031-IN-BSC-SZ		460-2984-02-03-00
A12U1	1820-1491	6	1	IC BFR TTL LS NON-INV HEX l-INP	01295	SN74LS367AN
A12U2	1820-1196	a	1	IC FF TTL LS O-TYPE POS-EDGE-TRIG COM CL	01295	SN74LS174N
A12U3	1820-1196	a	1	IC FF TTL LS O-TYPE POS-EDGE-TRIG COM CL	01295	SN74LS174N
A12U4	1820-1491	6	1	IC BFR TTL LS NON-INV HEX l-INP	01295	SN74LS367AN
A12U5	1810-0206	8	1	NETWORK-RES 8-SIP 10.0K OHM X 7	11236	750-81
A12U6	1820-1207	2	1	IC GATE TTL LS NAND 8-INP	01295	SN74LS30N
A12U7	1820-1202	7	1	IC GATE TTL LS NAND TPL 3-INP	01295	SN74LS10N
A12U8				P/O A6A2 NOT SEPARATELY REPLACEABLE		
A12U9	1820-1196	8	1	IC FF TTL LS O-TYPE POS-EDGE-TRIG COM CL	01295	SN74LS174N
A12U10	1820-1216	3	1	IC OCOR TTL LS 3-TO-8-LINE 3-INP	01295	SN74LS138N
A12U11	1820-1112	3	1	IC FF TTL LS O-TYPE POS-EDGE-TRIG PRESET	01295	SN74LS74AN
A12U12	1820-1492	7	1	IC BFR TTL LS INV HEX l-INP	01295	SN74LS368AN
A12U13	1820-1216	3	1	IC OCOR TTL LS 3-TO-&LINE 3-INP	01295	SN74LS138N
A12U14	1820-1112	a	1	IC FF TTL LS O-TYPE POS-EDGE-TRIG PRESET	01295	SN74LS74AN
A12U15	1820-1199	1	1	IC INV TTL LS HEX l-INP	01295	SN74LS04N
A12U16	1820-1112	8	1	IC FF TTL LS O-TYPE POS-EDGE-TRIG PRESET	01295	SN74LS74AN
A12U17	1820-1199	1	1	IC INV TTL LS HEX l-INP	01295	SN74LS04N
A12U18	1820-2270	1	1	IC CNTR TTL LS BIN UP/DOWN SYNCHRO POS-E	34335	AM25LS2569DC
A12U19	1820-2270	1	1	IC CNTR TTL LS BIN UP/DOWN SYNCHRO POS-E	34335	AM25LS2569DC
A12U20	1820-1196	8	1	IC FF TTL LS O-TYPE POS-EDGE-TRIG COM CL	01295	SN74LS174N
A12U21	1820-1491	6	1	IC BFR TTL LS NON-INV HEX l-INP	01295	SN74LS367AN
A12U22	1826-0161	7	1	IC OP AMP GP QUAD 14-DIP-P PKG	27014	LM324N
A12U23	1820-1425	6	1	IC SCHMITT-TRIG TTL LS NAND QUAD 2-INP	01295	SN74LS132N
A12U24	1820-1851	2	1	IC ENCOR TTL LS	01295	SN74LS148N
A12U25	1820-1440	5	1	IC LCH TTL LS QUAD	01295	SN74LS279AN
A12U26	1820-1196	3	1	IC FF TTL LS O-TYPE POS-EDGE-TRIG COM CL	01295	SN74LS174N
A12U27	1820-1211	3	1	IC GATE TTL LS EXCL-OR QUAD 2-INP	01295	SN74LS86AN
A12U28	1826-0180	3	1	IC TIMER TTL MONO/ASTBL	la324	NE555N
A12U29	1820-1196	3	1	IC FF TTL LS O-TYPE POS-EDGE-TRIG COM CL	01295	SN74LS174N
A12U30	1820-1210	7	1	IC GATE TTL LS AND-OR-INV DUAL 2-INP	01295	SN74LS51N
A12U31	1810-0206	a	1	NETWORK-RES 8-SIP 10.0K OHM X 7	11236	750-81
A12U32	1820-1210	7	1	IC GATE TTL LS AND-OR-INV DUAL 2-INP	01295	SN74LS51N
A12U33	1820-1216	3	1	IC OCOR TTL LS 3-TO-8-LINE 3-INP	01295	SN74LS138N

**Indicates factoy-selected value*

HP Part Number 85660-60290

Al2 Front Panel Interface

Reference Designation	HP Part Number	C D	Qty	Description	Mfr Code	Mfr Part Number
A12W2	0757-0346	2	1	RESISTOR 10 +-1% .125W TF TC=O+-100	91637	CMF-55-l. T-l

**Indicates factory-selected value*

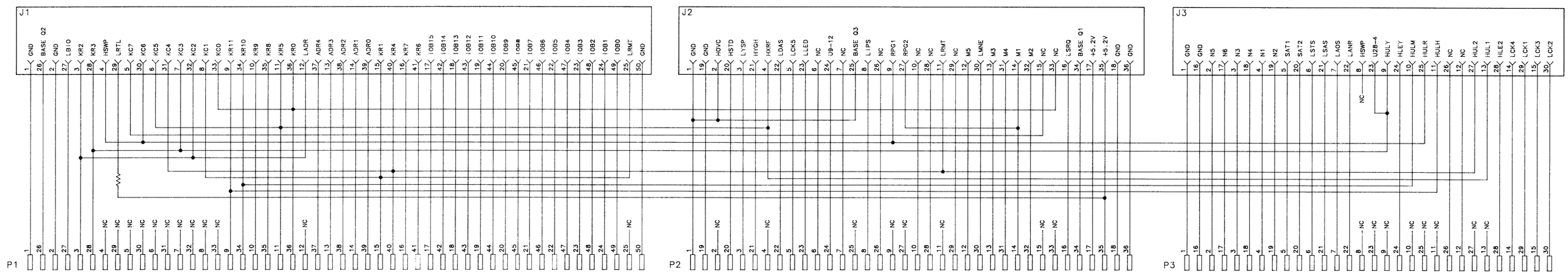

A12

A12 FRONT-PANEL INTERFACE EXTENDER BOARD, SCHEMATIC DIAGRAM

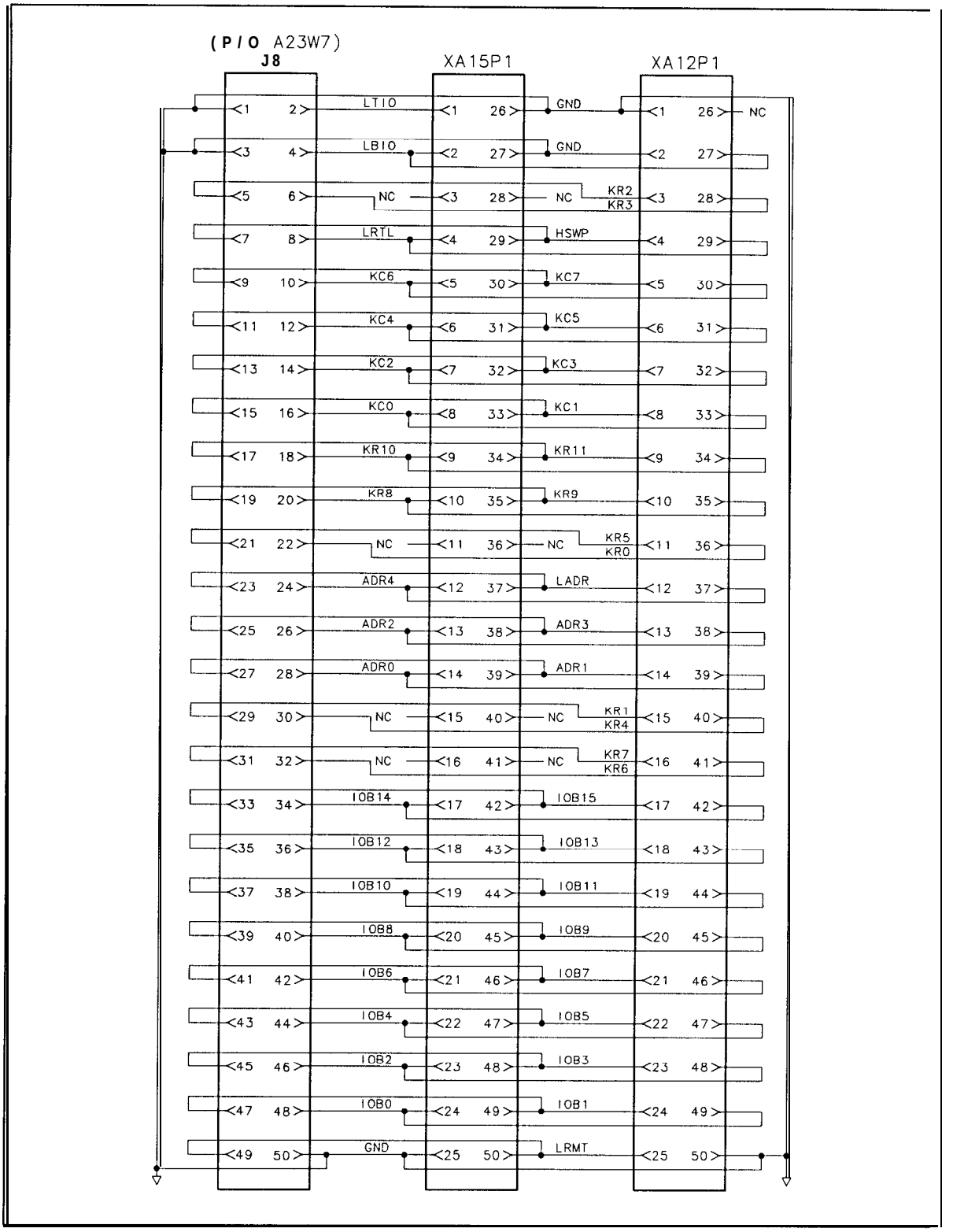

A23 Motherboard Instrument Bus, Interconnect Diagram

A12 FRONT-PANEL INTERFACE (SHEET 1 OF 2)
85660-60211
(SERIAL PREFIXES: 2410A-2430A)

P1

PIN	SIGNAL	TO/FROM	FUNCTION BLOCK
1	GND		K
26	BASE Q2	NC	A
2	GND		K
27	LB1G	A15P1-2	G
3	KR2	A5A1P1-46	A
28	KR3	A5A1P1-45	A
4	HSMP	A15P1-29	D
29	LRTL	A5A1P1-43	D
5	KC7	A5A1P1-42	A
30	KC6	A5A1P1-41	A
6	KC5	A5A1P1-40	A
31	KC4	A5A1P1-39	A
7	KC3	A5A1P1-38	A
32	KC2	A5A1P1-37	A
8	KC1	A5A1P1-36	A
33	KC0	A5A1P1-35	A
9	KR11	A15P1-34	A
34	KR10	A15P1-9	A
10	KR9	A15P1-35	A
35	KR8	A15P1-10	A
11	KR5	A5A1P1-30	A
36	KR4	A5A1P1-22	A
12	LADR	A5A1P1-28 A15P1-32	A
37	ADR4	A5A1P1-12	G
13	ADR3	A15P1-33	G
38	ADR2	A15P1-13	G
14	ADR1	A15P1-39	G
39	ADR0	A15P1-14	G
15	KR1	A5A1P1-29	A
40	KR0	A5A1P1-21	A
16	KR7	A15P1-20	A
41	KR6	A5A1P1-19	A
17	10B15	A15P1-42	A
42	10B14	A15P1-17	A
18	10B13	A15P1-43	A
43	10B12	A15P1-18	A
19	10B11	A15P1-44	A
44	10B10	A15P1-19	A
20	10B9	A15P1-45	A
45	10B8	A15P1-20	A
21	10B7	A15P1-46	A
46	10B6	A15P1-21	A
22	10B5	A15P1-47	A
47	10B4	A15P1-22	A
23	10B3	A15P1-48	A
48	10B2	A15P1-23	A
24	10B1	A15P1-49	A
49	10B0	A15P1-24	A
25	LRMT	A5A1P1-2 A15P1-50	D
50	GND	A15P1-25	K

P2

PIN	SIGNAL	TO/FROM	FUNCTION BLOCK
1	GND		K
19	GND		K
2	HOVC	A22	B
20	HSTD	A17P1-22	I
3	LYSP	A20P1-14	I
21	HYGH	A11A4	I
4	HXRF	S1	E
22	LDAS	A19P1-36	G
5	LCK5	A5A1P1-22	G
23	LLED	A5A1J1-12	G
6	NC		
24	U9-12	NOT USED	I
7	NC		
25	BASE Q3	NC	D
8	L1PS	A5A1J1-5	D
26	NC		
9	RPG1	A5A1J1-6	C
27	RPG2	A5A1J1-14	C
10	NC		
28	NC		
11	LRMT	NC	A
29	NC		
12	M5	A7A3P1-15	E
30	LWRE	A7A4P1-14	E
13	M3	A7A3P1-14	E
31	M4	A7A3P1-29	E
14	M1	A7A3P1-13	E
32	M2	A7A3P1-28	E
15	NC		
33	NC		
16	LSRQ	A15P2-34	D
34	BASE Q1	NC	D
17	+5.2V		K
35	+5.2V		K
18	GND		K
36	GND		K

P3

PIN	SIGNAL	TO/FROM	FUNCTION BLOCK
1	GND		K
16	GND		K
2	N5	A7A3P1-9	E
17	N6	A7A3P1-24	E
3	N3	A7A3P1-10	E
18	N4	A7A3P1-25	E
4	N1	A7A3P1-8	E
19	N2	A7A3P1-23	E
5	SAT1	A16P2-6	I
20	SAT2	A16P2-21	I
6	LSTS	A16P2-7	G
21	LSAS	A16P2-22	G
7	LAOS	A16P2-8	G
22	LANR	A16P2-23	D
8	HSMP	A16P2-9	D
23	U23-4	NC	C
9	HULY	A11A2	F
24	HLEY	A11A2	F
10	HULM	A7A3P1-26	F
25	HULR	A7A1P1-7	F
11	HULH	A8A9A1P1-16	F
26	NC		
12	NC		
27	HUL2	A10A6P1-4	F
13	HUL1	A10A2P1-26 A10A5P1-16 A10A6P1-3 A10A6P1-2	F
28	HLE2		F
14	LCK4	A10A1P1-4 A10A3P1-5 A10A7P1-19	G
29	LCK1		G
15	LCK3	A10A6P1-19	G
30	LCK2	A10A7P1-1	G

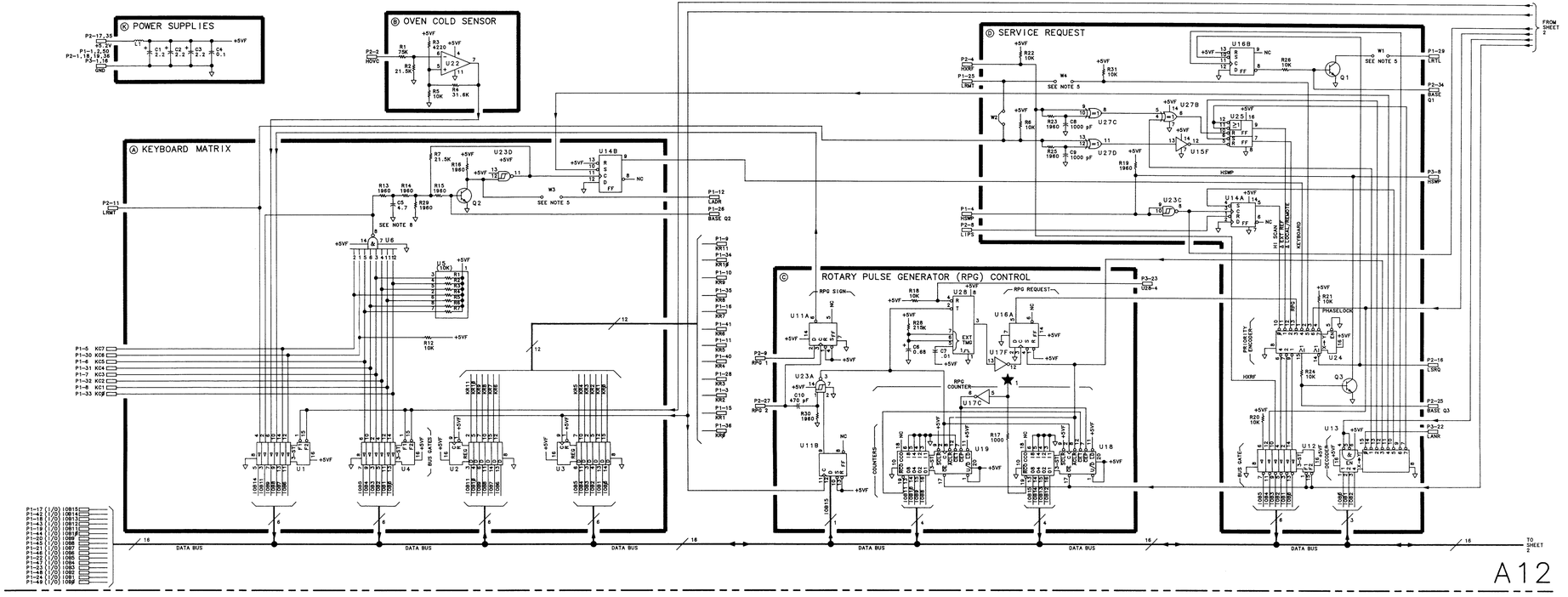

A12

A12 FRONT-PANEL INTERFACE, SCHEMATIC DIAGRAM (1 OF 2)

A12 FRONT-PANEL INTERFACE (SHEET 2 OF 2)
85660-60211
(SERIAL PREFIXES: 2410A-2430A)

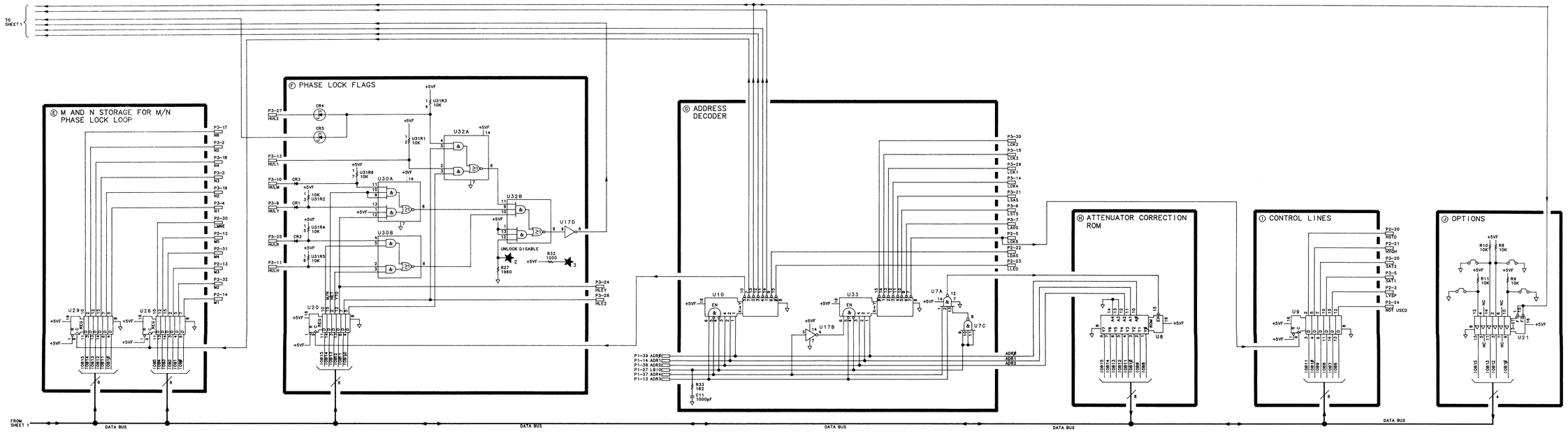

NOTES:

1. REFERENCE DESIGNATORS WITHIN THIS ASSEMBLY ARE ABBREVIATED. FOR COMPLETE REFERENCE DESIGNATION, PREFIX ABBREVIATION WITH ASSEMBLY DESIGNATION.

2. UNLESS OTHERWISE INDICATED:
RESISTANCE IS IN OHMS (Ω)
CAPACITANCE IS IN MICROFARADS(μF)
INDUCTANCE IS IN MICROHENRIES(μH)

3. UNLESS OTHERWISE INDICATED:
LOGIC LEVELS ARE TTL
2.0V TO 5.5V = LOGIC "1" = HIGH
0V TO +0.8V = LOGIC "0" = LOW

4. U5, U31 PIN CONFIGURATION:
U5/U31 (10K)

5. JUMPER W2 IS INSTALLED AND JUMPERS W1, W3, AND W4 ARE NOT INSTALLED FOR 8566A A12 FRONT-PANEL INTERFACE BOARDS 85660-60242 AND 85660-60260. FOR 8566A A12 FRONT-PANEL INTERFACE BOARDS 85660-60242 AND 85660-60261 HAVE JUMPERS W1, W3, AND W4 INSTALLED AND JUMPER W2 IS NOT INSTALLED.

6. MNEMONIC TABLE:

MNEMONIC	DESCRIPTION
ADR#-ADR4	ADDRESS BITS # THRU 4
HLC2	HIGH=PHASE LOCK LOOP 2 LOCK ENABLE
HLEY	HIGH=YTO LOCK ENABLE
HSWC	HIGH=SWEEP HOLD
HSTD	HIGH=TUNE STANDARD ON
HSWP	HIGH=SWEEPING
HUL1	HIGH=PHASE LOCK LOOP 1 ON 3 UNLOCKED
HUL2	HIGH=PHASE LOCK LOOP 2 UNLOCKED
HULH	HIGH=HETERODYNE OSC. UNLOCKED
HULM	HIGH=M/N UNLOCKED
HULN	HIGH=M/N UNLOCKED
HULY	HIGH=YTO UNLOCKED
HXRF	HIGH=EXTERNAL REF
HYGH	HIGH=YTO LOOP GAIN HIGH
IOB#-IOB15	INSTRUMENT BUS DATA BITS # THRU 15
KC#-KC7	KEY COLUMNS # THRU 7
KR0-KR11	KEY ROWS # THRU 11
LADR	LOW=ADDRESS LED ON
LANR	LOW=ANALOG RESET
LAS0	LOW=AUX OUT DAC STROBE
LB1C	LOW=RF SECTION STROBE
LCK1-LCK5	LOW=STROBES FOR PLL1,2,3
LDAS	LOW=DAC STROBE
LIPS	LOW=INSTRUMENT PRESET
LLED	LOW=LED STROBE
LNME	LOW=A/N OUTPUT ENABLE
LRMT	LOW=REMOTE
LRTL	LOW=LOCAL BUTTON PUSHED
LSAS	LOW=SCAN ATTENUATOR STROBE
LSRQ	LOW=SERVICE REQUEST
LSTP	LOW=STOP PROCESSOR
LSTS	LOW=SCAN TIME STROBE
LTGR	LOW=TRACKING GENERATOR REQUEST
LYSP	LOW=YTO SPAN
M1-M5	M/N LOOP-M INPUTS
N1-N8	M/N LOOP-N INPUTS
RPG1	ROTARY PULSE GENERATOR LINES
RPG2	
SAT1-SAT2	SCAN INTEGER ATTEN.

7. A, B, C, & D REPRESENT TRACES THAT ARE CUT AT THE FACTORY TO ENABLE SPECIAL OPTIONS. NONE OF THESE TRACES ARE CUT IN STANDARD INSTRUMENTS.

8. A12C5 HAS BEEN CHANGED FROM 1μF (HP PART NUMBER 0180-4883) TO 4.7μF (HP PART NUMBER 0180-2683) TO ELIMINATE MULTIPLE ENTRIES FROM 8010? FRONT PANEL KEYS.

A12

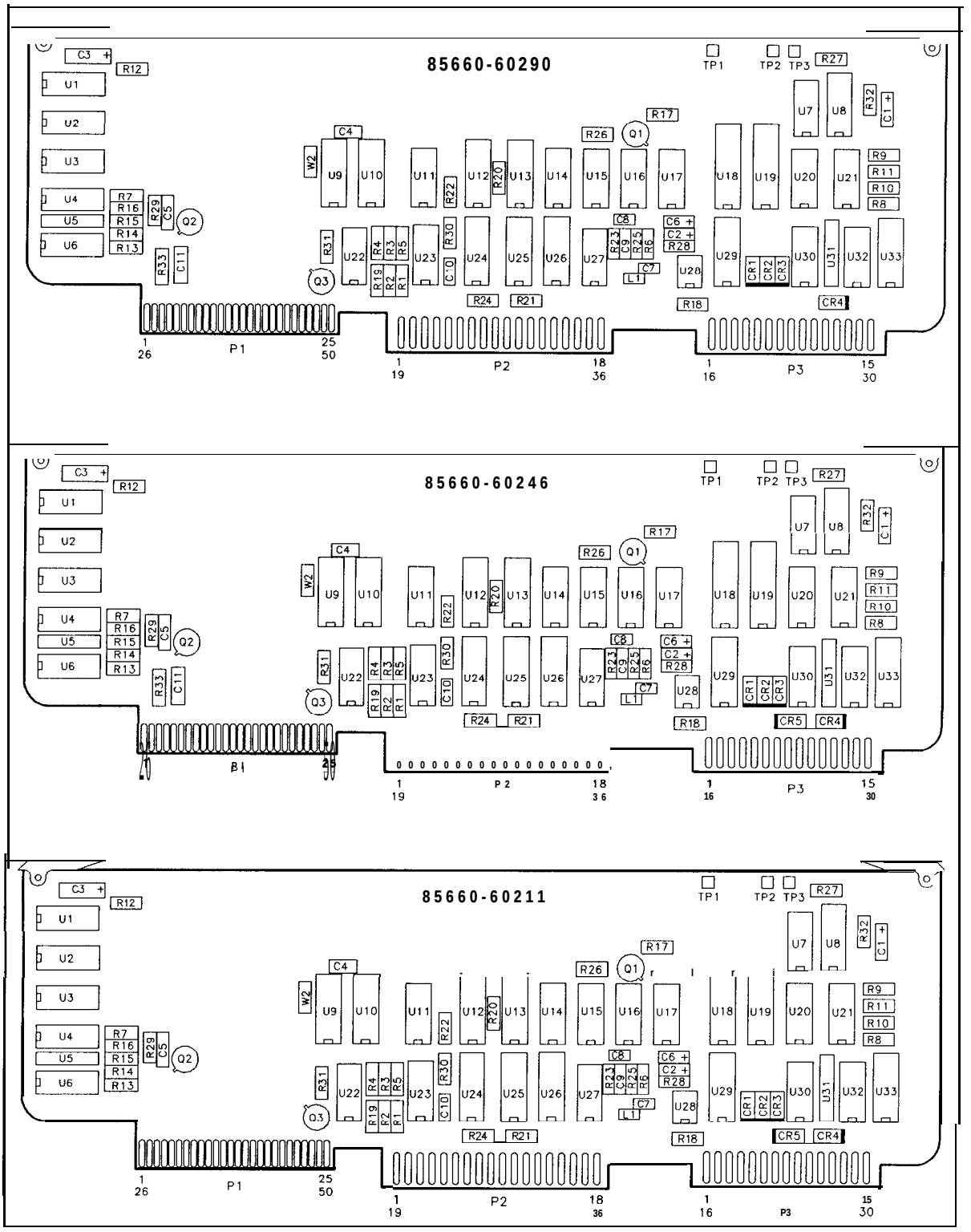

Al2 Front-Panel Interface Component Locations, 85660-60211, 85660-60246, 85660-60290

A12 FRONT-PANEL INTERFACE (SHEET 1 OF 2)
85660-60246
(SERIAL PREFIXES: 2449A-2613A)
85660-60290
(SERIAL PREFIX: 2618A)

P1

PIN	SIGNAL	TO/FROM	FUNCTION BLOCK
1	GND		K
26	BASE Q2	NC	A
2	GND		K
27	LB10	A15P1-2	G
3	KR2	A5A1P1-46	A
28	KR3	A5A1P1-45	A
4	HSWP	A15P1-29	D
29	LRTL	A15P1-4 A5A1P1-43	D
5	KC7	A5A1P1-42	A
30	KC6	A5A1P1-41	A
6	KC5	A5A1P1-40	A
31	KC4	A5A1P1-39	A
7	KC3	A5A1P1-38	A
32	KC2	A5A1P1-37	A
8	KC1	A5A1P1-36	A
33	KC8	A5A1P1-35	A
9	KR11	A15P1-34	A
34	KR18	A15P1-9	A
10	KR9	A15P1-35	A
35	KR8	A15P1-10	A
11	KR5	A5A1P1-30	A
36	KR6	A5A1P1-22	A
12	LADR	A5A1P1-28 A15P1-37	E
37	ADR4	A15P1-12	G
13	ADR3	A15P1-38	G
38	ADR2	A15P1-13	E
14	ADR1	A15P1-39	G
39	ADR0	A15P1-14	G
15	KR1	A5A1P1-29	A
40	KR4	A5A1P1-21	A
16	KR7	A5A1P1-20	A
41	KR10	A5A1P1-19	A
17	I0B15	A15P1-42	A
42	I0B14	A15P1-17	A
18	I0B13	A15P1-43	A
43	I0B12	A15P1-18	A
19	I0B11	A15P1-44	A
44	I0B10	A15P1-19	A
20	I0B9	A15P1-45	A
45	I0B8	A15P1-20	A
21	I0B7	A15P1-46	A
46	I0B6	A15P1-21	A
22	I0B5	A15P1-47	A
47	I0B4	A15P1-22	A
23	I0B3	A15P1-48	A
48	I0B2	A15P1-23	A
24	I0B1	A15P1-49	A
49	I0B0	A15P1-24	A
25	LRMT	A5A1P1-2 A15P1-50	D
50	GND	A15P1-25	K

P2

PIN	SIGNAL	TO/FROM	FUNCTION BLOCK
1	GND		K
19	GND		K
2	HOVC	A22	B
20	HSTD	A17P1-22	I
3	LYSP	A20P1-14	I
21	HYGH	A11A4	I
4	HXRF	S1	D
22	LOAS	A19P1-36	G
5	LCK5	A6A11P1-22	G
23	LLED	A5A1J1-12	G
6	NC		
24	U9-12	NOT USED	I
7	NC		
25	BASE Q3	NC	D
8	LIPS	A5A1J1-5	D
26	NC		C
9	RPG1	A5A1J1-6	C
27	RPG2	A5A1J1-14	C
10	NC		
28	NC		
11	LRMT	NC	A
29	NC		
12	M5	A7A3P1-15	E
30	LMNE	A7A4P1-14	E
13	M3	A7A3P1-14	E
31	M4	A7A3P1-29	E
14	M1	A7A3P1-13	E
32	M2	A7A3P1-28	E
15	NC		
33	NC		
16	LSRQ	A15P2-34	D
34	BASE Q1	NC	D
17	+5.2V		K
35	+5.2V		K
18	GND		K
36	GND		K

P3

PIN	SIGNAL	TO/FROM	FUNCTION BLOCK
1	GND		K
16	GND		K
2	N5	A7A3P1-9	E
17	N6	A7A3P1-24	E
3	N3	A7A3P1-10	E
18	N4	A7A3P1-25	E
4	N1	A7A3P1-8	E
19	N2	A7A3P1-23	E
5	SAT1	A16P2-6	I
20	SAT2	A16P2-21	I
6	LSTS	A16P2-7	G
21	LSAS	A16P2-22	G
7	LAOS	A16P2-8	G
22	LANR	A16P2-23	D
8	HSWP	A16P2-9	D
23	U28-4	NC	C
9	HULY	A11A2	F
24	HLEY	A11A2	F
10	HULM	A7A3P1-26	F
25	HULR	A7A1P1-7	F
11	HULH	A5A8A1P1-18	F
26	NC		
12	NC		
27	HUL2	A10AEP1-4	F
13	HUL1	A10A2P1-26 A10A4P1-16	F
28	HLE2	A10A3P1-2 A10A6P1-2	F
14	LCK4	A10A1P1-4	G
29	LCK1	A10A2P1-8 A10A7P1-19	G
15	LCK3	A10ABP1-19	G
30	LCK2	A10A7P1-1	G

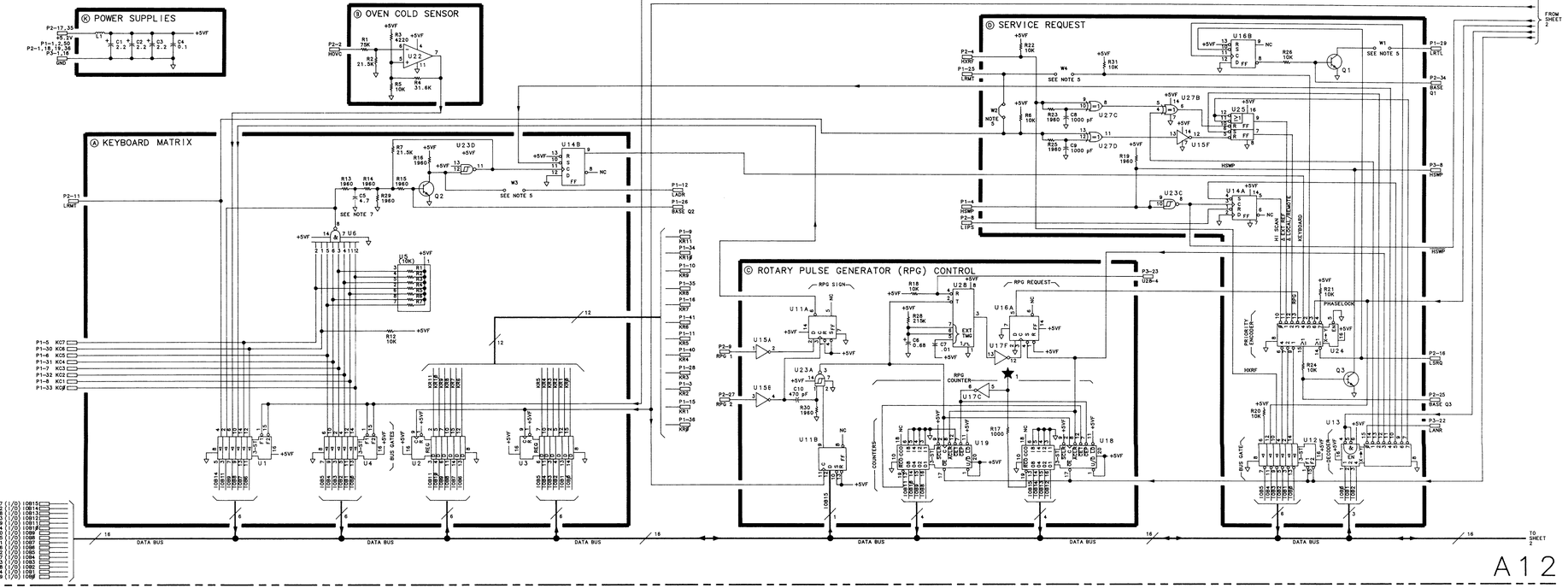

A12

A12 FRONT-PANEL INTERFACE, SCHEMATIC DIAGRAM (1 OF 2)

A12 FRONT-PANEL INTERFACE (SHEET 2 OF 2)
85660-60246 (SERIAL PREFIXES: 2449A-2613A)
85660-60290 (SERIAL PREFIX: 2618A)

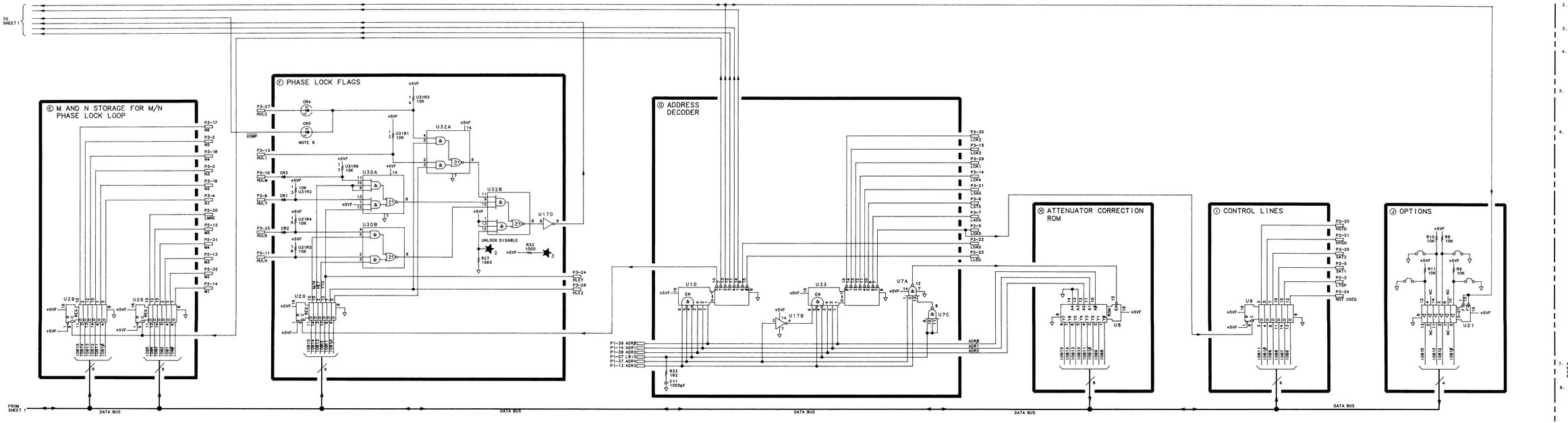

NOTES:

1. REFERENCE DESIGNATORS WITHIN THIS ASSEMBLY ARE ABBREVIATED. FOR COMPLETE REFERENCE DESIGNATION, PREFIX ABBREVIATION WITH ASSEMBLY DESIGNATION.
2. UNLESS OTHERWISE INDICATED: RESISTANCE IS IN OHMS (Ω). CAPACITANCE IS IN MICROFARADS (μF) INDUCTANCE IS IN MICROHENRIES (μH)
3. UNLESS OTHERWISE INDICATED: LOGIC LEVELS ARE TTL: 2.0V TO +5.0V = LOGIC '1' = HIGH 0V TO +0.8V = LOGIC '0' = LOW
4. U5, U31 PIN CONFIGURATION:

5. JUMPER W2 IS INSTALLED AND JUMPERS W1, W3, AND W4 ARE NOT INSTALLED FOR FOR 85668 A12 FRONT-PANEL INTERFACE BOARDS 85660-60246 AND 85660-60290; 85664 A12 FRONT-PANEL INTERFACE BOARDS 85660-60242 AND 85661-60285 HAVE JUMPERS W1, W3, AND W4 INSTALLED AND JUMPER W2 IS NOT INSTALLED.
6. MNEMONIC TABLE:

MNEMONIC	DESCRIPTION
ADR8-ADR4	ADDRESS BITS 8 THRU 4
HLE2	HIGH=PHASE LOCK LOOP 2 LOCK ENABLE
HLEY	HIGH=YTO LOCK ENABLE
HOVC	HIGH=OVEN COLD
HSTD	HIGH=10 MHz STANDARD ON
HSWP	HIGH=SWEEPING
HUL1	HIGH=PHASE LOCK LOOP 1 UNLOCKED
HUL2	HIGH=PHASE LOCK LOOP 2 UNLOCKED
HULH	HIGH=RETRODYNE OSC. UNLOCKED
HULM	HIGH=M/N UNLOCKED
HULR	HIGH=REF. UNLOCKED
HULY	HIGH=YTO UNLOCKED
HXRF	HIGH=EXTERNAL REF.
HYGH	HIGH=YTO LOOP GAIN HIGH
I08(0-15)	INSTRUMENT BUS DATA BITS 0 THRU 15
KC8-KC7	KEY COLUMNS 8 THRU 7
KR0-KR11	KEY ROWS 0 THRU 11
LADR	LOW=ADDRESS LED ON
LANR	LOW=ANALOG RESET
LAOS	LOW=AUX OUT DAC STROBE
LB10	LOW=RF SECTION STROBE
LCK1-LCK5	LOW=STROBES FOR PLL1,2,3
LDAS	LOW=DAC STROBE
LIPS	LOW=INSTRUMENT PRESET
LLED	LOW=LED STROBE
LNME	LOW=A/N OUTPUT ENABLE
LRMT	LOW=REMOTE
LRTL	LOW=LOCAL BUTTON PUSHED
LSAS	LOW=SOURCE ATTENUATOR STROBE
LSRQ	LOW=SERVICE REQUEST
LSTP	LOW=STOP PROCESSOR
LSTS	LOW=SCAN TIME STROBE
LTGR	LOW=TRACKING GENERATOR REQUEST
LYSP	LOW=YTO SPAN
M1-M5	M/N LOOP-N INPUTS
N1-N6	M/N LOOP-N INPUTS
RPG1	ROTARY PULSE GENERATOR LINES
SAT1-SAT2	SCAN INTEGER ATTEN.

7. A12C5 HAS BEEN CHANGED FROM 1μF (HP PART NUMBER 0186-4892) TO 4.7μF (HP PART NUMBER 0180-2883) TO ELIMINATE MULTIPLE ENTRIES FROM NOISY FRONT PANEL KEYS.
8. A12CR5 IS REMOVED ON 85660-60290 TO DETECT PLL2 UNLOCKS IN ZERO SPAN WITH A10A8 PHASE DETECTOR 85660-60276. A12 85660-60290 MUST BE INSTALLED; SHOULD BE USED WITH EARLIER VERSIONS OF A10A8 PLL2 PHASE DETECTOR.

A12

A15

A15 Controller, Circuit Description

The Al5 controller performs the main control functions of the spectrum analyzer. The board includes a 16-bit microprocessor (the instrument's main processor), read-only memory (ROMs), random-access memory (RAMs), and HP-IB circuitry.

The schematic shows how the main processor, memory, HP-IB, and other circuits on the A15 Controller are interconnected via the microprocessor's 23-bit address bus and the 16-bit data bus. To control signal flow on these buses, various signals must be derived from the address bus signals and the microprocessor's remaining output signals. These control signals are generated by two programmable-array-logic integrated circuits (PALs) and other discrete logic (R/W DECODE, ADDRESS DECODER AND DTACK, ADDRESS DECODE, and LTIO/LBIO blocks). The signals are used by the microprocessor to control data flow and address decoding on the Al5 Controller and to control signal flow over the Instrument Bus.

The 16-bit, 8 MHz MC68000 microprocessor receives input through the front panel keyboard or from HP-IB, performs the necessary decoding and calculations, and outputs the proper control signals to execute a specific spectrum analyzer operation. Typical main processor tasks include phase-locking the YTO, selecting the correct sweep time and frequency span, setting the IF-Display Section resolution bandwidth and sensitivity, and displaying the current control settings on the CRT through the A3 Digital Storage Section. Instructions that tell the microprocessor how to accomplish these tasks, the firmware, are stored in ROMs located on the Al5 Controller. In addition, custom commands and programming can be downloaded into RAM, permitting specialized operation without requiring a dedicated controller.

The microprocessor performs a brief power-on pretest (POP) at instrument turn-on, verifying operation of critical circuits and lighting front-panel check LEDs I and II. In addition, LEDs located on the top edge of the Al5 Controller provide information to help identify particular faulty circuit components in case a failure occurs.

The instrument's main memory consists of read-only memory (ROM) and random-access memory (RAM)which are located on the Al5 controller. Each 16-bit word in memory is composed of two 8-bit bytes. The ROM, used to provide permanent storage of the firmware, is composed of four 32 Kbyte erasable programmable read-only memory (EPROMs). This provides a total of 64 K-words of ROM. The RAM, used for erasable storage of custom instructions and programs, is composed of four 8 Kbyte static CMOS memory-integrated circuits for a total of 16 K-words of RAM. A lithium battery located on the Al5 Controller provides battery backup power to the CMOS RAM to preserve the contents of memory when power is removed from the instrument. The typical in-circuit life expectancy of the non-rechargeable battery is at least three years.

The HP-IB allows the spectrum analyzer to communicate with external devices. It is implemented using four ICs: a data latch, an HP-IB processor, and two bus transceivers.

The Al5 Controller clock circuit generates an 8-MHz clock signal for the 16-bit microprocessor and a synchronous 4-MHz clock signal for the HP-IB processor. The appropriate clock

frequency is derived from division of the output signal of a 14.7456 MHz hybrid crystal clock oscillator.

The Al5 Controller firmware includes extensive diagnostics which are executed whenever the instrument is powered up or the INSTRUMENT PRESET key is pressed.

The microprocessor executes a self-test routine and indicates the results via LEDs. A memory failure, microprocessor failure, or Instrument Bus failure can usually be pinpointed to the failed component using these indicators.

HP-IB Address Switch

The position of the address switch on the Al5 Controller (A15SW1) determines which HP-IB address is used by the analyzer when the line power is turned on.

The address switch is preset to 31 (switches Al through A5 pressed up) at the factory. If the CMOS backup battery has not been discharged, the last HP-IB address used by the analyzer is active at instrument power-up. If the backup battery is discharged, the analyzer will default to an HP-IB address of 18 at instrument power-up.

If the address switch is set to any address from 0 to 30, this address will be used as the read/write address by the analyzer with power on.

Switch A6 is also set in the “up” position (logic 1) at the factory. A6 in this position does a checksum verification of the two pairs of ROMs on the Al5 Controller as part of the self-test routine with power.

HP-IB Signal Ground (A25)

The A25 HP-IB Signal Ground assembly provides chassis ground for the HP-IB shield. Pins 12 and 18 through 24 of the HP-IB connector J2 are immediately grounded to the chassis upon entering the instrument.

Firmware

The firmware for the HP 8566B has been changed several times since its origin. These changes of firmware have required that U37, U38, U39, and U40 EPROMs be changed. The following table lists each of the HP 8566B firmware changes, the firmware date (displayed when the HP 8566B is powered on), the HP part numbers for the EPROMs, and the serial number prefixes of the HP 8566B that the firmware revision was originally manufactured with.

Revision Code	Firmware Date	EPROM Part Numbers	Serial Prefixes
A	13.9.86	85660-80053 85660-80054 85660-80055 85660-80123 85660-80056	2410A through 2421A
B	17.7.84	85660-80071 85660-80072 85660-80073 85660-80074	2430A through 2449A
c	14.1.85	85660-80080 85660-80081 85660-80082 85660-80083	2503A through 2516A
D	5.5.85	85660-80092 85660-80093 85660-80094 85660-80095	2526A
E	16.7.85	85660-80104 85660-80105 85660-80106 85660-80107	2526A through 2627A
F	13.9.86	85660-80123 85660-80124 85660-80125 85660-80126	2635A
G	29.9.86	85660-80148 85660-80149 85660-80150 85660-80151	2635A through 2937A
H	10.10.88	85660-80185 85660-80186 85660-80187 85660-80188	2949A and Above

A15 Controller, Troubleshooting

Troubleshooting the Al5 Controller is divided into two levels:

Level 1 is Self Test which uses the built-in diagnostics of the spectrum analyzer to isolate the failure. No external test equipment is required.

Level 2 is Manual Tests which require the use of general troubleshooting equipment such as a digital voltmeter and oscilloscope. This level is required when the Self Test can't isolate the failure.

Level 1 Self Test

The Self Test is run on power-up and after pushing the [INSTRUMENT PRESET] key. Two front panel LEDs, INSTR CHECK I and II, give an indication of Self Test results (without removing any covers from the instrument). There are also 15 LEDs on the Al5 Controller (DS1 through DS15) that will help isolate a problem.

Front Panel INSTR CHECK I and II LEDs

The two red INSTR CHECK LEDs are forced on whenever the instrument is turned on or the [INSTRUMENT PRESET] key is pushed. The main processor then performs a check of itself, a checksum verification of all ROMs on the Al5 Controller, a partial check of the Instrument Bus (50-wire bus), and a read/write check of the RAMs and A3A4 Memory in the IF-Display Section.

If all the checks pass, both INSTR CHECK LEDs are turned off. If the check fails, one or both INSTR CHECK LEDs remain on.

a. Both INSTR CHECK LEDs on indicates a problem on the Al5 Controller. First remove the Al5 Controller and make sure that the 50-wire ribbon cable and HP-IB ribbon cable are pressed all the way onto A15J1 and A15J2 connectors. Reinstall the Al5 Controller. If both front panel INSTR CHECK LEDs still remain on when the instrument is turned on, follow procedure under Al5 Controller Self Test.

b. Left LED (INSTR CHECK I) on indicates a failure occurred when checking Digital Storage Memory (A3A4). First check to ensure that a LINE power cord is connected to the IF-Display Section. Also check to se that the rear-panel Analyzer Bus Interconnect Cable, W31, is properly connected. If INSTR CHECK I still remains on when the instrument is turned on, troubleshoot the A3 Digital Storage in the IF-Display Section.

c. Right LED (INSTR CHECK II) on indicates a failure occurred during the partial check of the Instrument Bus.

Note

The partial interface check reads the key column lines (KC0 through KC7) from the Al and A5 front panels. If any front panel key is shorted or stuck closed, INSTR CHECK II LED should remain on after the Self Test is completed. This part of the Self Test can easily be verified by pushing any key, except [LCL], and holding the key in while pushing the [INSTRUMENT PRESET] key. If the I/O interface check routine is working, INSTR CHECK II LED will stay on.

d. Suspected Digital Failure but no INSTR CHECK LEDs on may indicate a RAM or I/O bus failure which is not checked in the normal Self Test or "POP" (Power On Preset). If

the two front panel INSTR CHECK LEDs turn on when the LINE switch is set to ON and within a few seconds turn off (indicating no digital problems), but symptoms (such as improper CRT display or improper response to particular commands) indicate that the problem is in the digital area, a "LONG POP" can be performed. LONG POP is very similar to the normal POP except an additional processor check is performed, all of the RAM locations in Digital Storage (A3A4 Memory) are checked, and the memory (RAM) on the Al5 Controller is verified.

Since these more extensive checks require altering information that has been stored in RAM, LONG POP requires an internal jumper on the Al5 Controller. To perform a LONG POP:

- Set the LINE Switch to STANDBY.
- Place a jumper between ST or STS to T3
  - On Al5 Controller (HP part number 85660-60209) jumper A15TP4 (STS) to A15TP1-7 (T3).
  - On Al5 Controller (HP part number 85660-60245) jumper A15TP1-9 (ST) to A15TP1-8 (T3).
  - (Refer to Al5 Controller Component Location Diagrams for location of test points).
- Set the LINE switch to ON.

When LINE switch is then set to ON, the two red INSTR CHECK LEDs are forced on and the main processor steps through the Self Test routine, expanding the normal POP by the additional tests mentioned. The expected results for a LONG POP are exactly the same as for the normal POP of INSTR PRESET as described above under "Front Panel INSTR CHECK I and II LEDs".

Because LONG POP is a "destructive test" (it alters any information that has been stored in RAM), it should be performed only as a last resort effort in troubleshooting what appears to be a memory or processor-related problem.

A15 Controller Self Test

The Al5 Controller Self Test is run on power-up and after pushing the (INSTRUMENT PRESET) key. Fourteen LEDs (A15DS1 through A15DS14) on the Al5 Controller give an indication of the Self Test results. All 14 LEDs are forced on whenever the instrument is turned on or the (INSTRUMENT PRESET) key is pushed. The main processor (A15U26) then performs a check of itself, a check of the Peripheral Interface and Timer chip, a checksum verification of all the ROMs on the Al5 Controller, a read/write check of the RAMs on the Al5 Controller, and an Instrument Bus check that checks the I/O Bus, Address Bus, and Data Bus for stuck lines.

If all the checks pass, the 14 LEDs are turned off serially as each check is completed. If the checks fail, one or more LEDs remain on. Refer to Table 1, "A15 Controller Self Test Fail Indicators," at the end of this troubleshooting section.

Other failure modes to look for are:

a. If the 14 LEDs turn on but are all turned off at the same time (instead of sequentially), the Peripheral Interface and Timer chip has most likely failed.

b. When an I/O failure is indicated (DS3, DS4, or a combination of these LEDs remain on), it may become necessary to use an oscilloscope to locate a stuck line.

Try replacing U20 and U42 PALs first, then try replacing U39 and U40 ROMs. If I/O failure still occurs, probe I/O lines with oscilloscope.

Level 2 Manual Tests

If the Self Test doesn't lead to a failed component, it will be necessary to use a DVM or an oscilloscope. The following procedure may help locate the failed component:

a. Check all power supply voltages that supply power to the Al5 Controller.

b. Check processor clock by connecting oscilloscope to A15TP2-4 (CK). The clock frequency should be approximately 7.36 MHz. The amplitude should be approximately +5 V (HIGH) and 0 V (LOW). Also check for LCLK at pin 7 of A15U27B.

c. Check HP-IB clock at pin 5 of A15U27A. The HP-IB clock frequency should be approximately 3.68 MHz. The amplitude should be approximately +5 V (HIGH) and 0 V (LOW).

d. Some intermittent failures may require the use of heat (hair dryer) or cold (freeze mist) to isolate the failure.

Caution



Care should be exercised to avoid getting components too hot. Excessive heat may cause permanent damage of good components. Also, avoid spraying freeze mist directly on PC boards. Failures due to high-resistance paths between traces on PC boards have been caused by spraying the boards with freeze mist.

Table I-I. Al5 Controller Self Test Fail Indicators

Al5 LED On	Affected Circuitry	Probable Failure
DS1	Processor	A15U26
DS2	Top Box Address	Use oscilloscope to isolate failure.
DS3	Bottom Box Address	Use oscilloscope to isolate failure
DS4	I/O, Data Bus	Use oscilloscope to isolate failure.
DS5	RAM	A15U18
DS6	RAM	A15U15
DS7	RAM	A15U17
DS8	RAM	A15U14
DS9*	ROM	A15U19
DS10*	ROM	A15U16
DS11	ROM	A15U39
DS12	ROM	A15U37
DS13	ROM	A15U40
DS14	ROM	A15U38
DS15†	RAM	Power Supply (VRAM)

* A15U16 and A15U19 are loaded when 128K ROMs (set of 6) are installed. A15U16 and A15U19 are not loaded when 256K ROMs (set of 4) are used.

. DS15 should normally stay on. If DS15 is not on, suspect the power supply that supplies VRAM.

HP Part Number 85660-60209

Al5 Controller

Reference Designation	HP Part Number	CD	Qty	Description	Mfr Code	Mfr Part Number
A15	85660-60209	9	1	BOARD ASSEMBLY, CONTROLLER (SERIAL PREFIXES: 2410A - 2449A)	28480	85660-60209
A15BT1	1420-0331	3	1	BATTERY 3.6V 1.75A-HR LITHIUM THIONYL		15-51-04-410-000
A15C1	0160-4554	7	1	CAPACITOR-FXD .01UF +-20% 50VDC CER	28480	0160-4554
A15C2	0160-4554	7	1	CAPACITOR-FXD .01UF +-20% 50VDC CER	28480	0160-4554
A15C3	0160-4554	7	1	CAPACITOR-FXD .01UF +-20% 50VDC CER	28480	0160-4554
A15C4	0160-4554	7	1	CAPACITOR-FXD .01UF +-20% 50VDC CER	28480	0160-4554
A15C5	0160-4554	7	1	CAPACITOR-FXD .01UF +-20% 50VDC CER	28480	0160-4554
A15C6	0160-4554	7	1	CAPACITOR-FXD .01UF +-20% 50VDC CER	28480	0160-4554
A15C7	0160-4554	7	1	CAPACITOR-FXD .01UF +-20% 50VDC CER	28480	0160-4554
A15C8	0160-4554	7	1	CAPACITOR-FXD .01UF +-20% 50VDC CER	28480	0160-4554
A15C10	0160-4554	7	1	CAPACITOR-FXD .01UF +-20% 50VDC CER	28480	0160-4554
A15C11	0160-4554	7	1	CAPACITOR-FXD .01UF +-20% 50VDC CER	28480	0160-4554
A15C12	0160-4554	7	1	CAPACITOR-FXD .01UF +-20% 50VDC CER	28480	0160-4554
A15C13	0160-4554	7	1	CAPACITOR-FXD .01UF +-20% 50VDC CER	28480	0160-4554
A15C15	0160-4554	7	1	CAPACITOR-FXD .01UF +-20% 50VDC CER	28480	0160-4554
A15C17	0160-4554	7	1	CAPACITOR-FXD .01UF +-20% 50VDC CER	28480	0160-4554
A15C18	0160-4554	7	1	CAPACITOR-FXD .01UF +-20% 50VDC CER	28480	0160-4554
A15C19	0160-4554	7	1	CAPACITOR-FXD .01UF +-20% 50VDC CER	28480	0160-4554
A15C20	0160-4554	7	1	CAPACITOR-FXD .01UF +-20% 50VDC CER	28480	0160-4554
A15C22	0160-4554	7	1	CAPACITOR-FXD .01UF +-20% 50VDC CER	28480	0160-4554
A15C23	0160-4554	7	1	CAPACITOR-FXD .01UF +-20% 50VDC CER	28480	0160-4554
A15C24	0160-4574	1	1	CAPACITOR-FXD 1000PF +-10% 100VDC CER	28480	0160-4574
A15C25	0160-4535	4	1	CAPACITOR-FXD 1UF +-10% 50VDC CER	28480	0160-4554
A15C29	0160-4832	4	1	CAPACITOR-FXD .01UF +-10% 100VDC CER	28480	0160-4832
A15C30	0180-0500	7	1	CAPACITOR-FXD 47UF +-20% 20VDC TA	28480	0180-0500
A15C31	0180-0197	8	2	CAPACITOR-FXD 2.2UF +-10% 20VDC TA	56289	150D225X9020A2
A15C32	0180-0552	9	1	CAPACITOR-FXD 220UF +-20% 10VDC TA	28480	0180-0552
A15C33	0180-0197	8	1	CAPACITOR-FXD 2.2UF +-10% 20VDC TA	56289	150D225X9020A2
A15C34	0160-4801	7	1	CAPACITOR-FXD 100PF +-5% 100VDC CER	28480	0160-4801
A15C35	0160-4833	5	1	CAPACITOR-FXD .022UF +-10% 100VDC CER	28480	0160-4833
A15CR1	1901-0620	3	1	DIODE-SWITCHING 60V 400MA DO-35	9N171	NDP250
A15CR2	1901-0050	3	1	DIODE-SWITCHING 80V 200MA 2NS DO-35	28480	1901-0050
A15CR3	1901-0518	8	1	DIODE-SM SIG SCHOTTKY	28480	1901-0518
A15CR4	1901-0620	3	1	DIODE-SWITCHING 60V 400MA DO-35	9N171	NDP250
A15DS1	1990-0958	7	1	LED-LAMP IF=7MA-MAX BVR=5V	28480	1990-0958
A15DS2	1990-0958	7	1	LED-LAMP IF=7MA-MAX BVR=5V	28480	1990-0958
A14DS3	1990-0958	7	1	LED-LAMP IF=7MA-MAX BVR=5V	28480	1990-0958
A15DS4	1990-0958	7	1	LED-LAMP IF=7MA-MAX BVR=5V	28480	1990-0958
A15DS5	1990-0958	7	1	LED-LAMP IF=7MA-MAX BVR=5V	28480	1990-0958
A14DS6	1990-0958	7	1	LED-LAMP IF=7MA-MAX BVR=5V	28480	1990-0958
A15DS7	1990-0958	7	1	LED-LAMP IF=7MA-MAX BVR=5V	28480	1990-0958
A14DS8	1990-0958	7	1	LED-LAMP IF=7MA-MAX BVR=5V	28480	1990-0958
A15DS9	1990-0958	7	1	LED-LAMP IF=7MA-MAX BVR=5V	28480	1990-0958
A15DS10	1990-0958	7	1	LED-LAMP IF=7MA-MAX BVR=5V	28480	1990-0958
A14DS11	1990-0958	7	1	LED-LAMP IF=7MA-MAX BVR=5V	28480	1990-0958
A15DS12	1990-0958	7	1	LED-LAMP IF=7MA-MAX BVR=5V	28480	1990-0958

**Indicates factoy-selected value*

HP Part Number 85660-60209

A15 Controller

Reference Designation	HP Part Number	C D	Qty	Description	Mfr Code	Mfr Part Number
A14DS13	1990-0958	7	1	LED-LAMP IF=7MA-MAX BVR=5V	28480	1990-0958
A15DS14	1990-0958	7	1	LED-LAMP IF=7MA-MAX BVR=5V	28480	1990-0958
A14DS15	1990-0957	6	1	LED-LAMP LUM-INT=1MCD IF=7MA-MAX BVR=5V	28480	1990-0957
A15E1	1251-4787	2	1	SHUNT-DIP 8-POSITION	28480	1251-4787
A15J1	1251-5926	3	1	CONNECTOR 50-PIN M POST TYPE	28480	1251-5926
A15J2	1251-5905	8	1	CONNECTOR 24-PIN M POST TYPE	28480	1251-5905
A15J3	1200-0607	0	1	16-PIN IC SOCKET	28480	1200-0607
A15J5	1251-5619	1	1	CONNECTOR 4-PIN M POST TYPE	28480	1251-5619
A15L1	9140-0864	1	1	COIL 120UH 20%	28480	9140-0864
A15L2	08558-80011	6	1	INDUCTOR BLUE COIL	28480	08558-80011
A15MP1	1400-1267	4	1	HOLDER BATTERY .531-.656 DIA	91833	91
A15MP2	1251-5177	6	2	CONNECTOR SINGLE PIN .031 IN	28480	1251-5177
A15MP3	1480-0073	6	2	PIN-ROLL .062-IN-DIA .25-IN-LG BE-CU	28480	1480-0073
A15MP4	4040-0749	4	1	EXTR-PC BD BRN POLYC .062-BD-THKNS	28480	4040-0749
A15MP5	4040-0753	0	1	EXTR-PC BD GRN PDLYC .062-BD-THKNS	28480	4040-0753
A15MP6				NOT ASSIGNED		
A15MP7	2200-0139	4	1	SCREW-MACH 4-40 .25-IN-LG PAN-HD POZI	28480	2200-0139
A15MP8	3050-0105	6	1	WASHER-FL MTLC NO. 4 .125-IN-ID	28480	3050-0105
A15MP9	2190-0003	8	1	WASHER-LK HLCL ND. 4 .115-IN-ID	28480	2190-0003
A15MP10	2260-0001	5	1	NUT-HEX-DBL-CHAM 4-40-THD .094-IN-THK	28480	2260-0001
A1591	1853-0281	9	1	TRANSISTOR PNP 2N2907A SI TO-18 PD=400MW	04713	2N2907A
A15R2	0698-7272	1	1	RESISTOR 31.6K 1% .05W F TC=O+-100	24546	C3-1/8-TO-3162-F
A15R4	3698-3157	3	1	RESISTOR 19.6K 1% .125W F TC=O+-100	24546	C4-1/8-TO-1962-F
A15R5	3698-3152	8	1	RESISTOR 3.48K 1% .125W F TC=O+-100	24546	C4-1/8-TO-3481-F
A15R6	0698-3260	9	1	RESISTOR 464K 1% .125W F TC=O+-100	28480	0698-3260
A15R7	0757-0280	3	1	RESISTOR 1K 1% .125W F TC=O+-100	24546	C4-1/8-TO-1001-F
A15R8	0757-0465	6	1	RESISTOR 100K 1% .125W F TC=O+-100	24546	C4-1/8-TO-1003-F
A15R9	0757-0442	9	1	RESISTOR 10K 1% .125W F TC=O+-100	24546	C4-1/8-TO-1002-F
A15R10	0698-3260	9	1	RESISTOR 464K 1% .125W F TC=O+-100	28480	0698-3260
A15R11	0757-0442	9	1	RESISTOR 10K 1% .125W F TC=O+-100	24546	C4-1/8-TO-1002-F
A15R12	0698-3260	9	1	RESISTOR 464K 1% .125W F TC=O+-100	28480	0698-3260
A15R13	0698-3440	7	1	RESISTOR 196 1% .125W F TC=O+-100	24546	C4-1/8-TO-196R-F
A15R14	0757-0401	0	1	RESISTOR 100 1% .125W F TC=O+-100	24546	C4-1/8-TO-101-F
A15R15	0757-0421	4	1	RESISTOR 825 1% .125W F TC=O+-100	24546	C4-1/8-TO-825R-F
A15R16	0698-3151	7	1	RESISTOR 2.87K 1% .125W F TC=O+-100	24546	C4-1/8-TO-2871-F
A15R17	0757-0428	1	1	RESISTOR 1.62K 1% .125W F TC=O+-100	24546	C4-1/8-TO-1621-F
A15R18	0757-0280	3	1	RESISTOR 1K 1% .125W F TC=O+-100	24546	C4-1/8-TO-1001-F
A15R19	0698-3155	1	1	RESISTOR 4.64K 1% .125W F TC=O+-100	24546	C4-1/8-TO-4641-F
A15R20	3698-3152	8	1	RESISTOR 3.48K 1% .125W F TC=O+-100	24546	C4-1/8-TO-3481-F
A15SW1	3101-2197	9	1	SWITCH-RKR DIP-RKR-ASSY 6-1A .05A 30VDC	28480	3101-2197
A15TP1	1251-8096	4	1	HEADER ASSY 7PIN	28480	1251-8096
A15TP2	1251-8616	4	1	HEADER ASSY 4PIN	28480	1251-8616
A15TP3	3360-1682	0	1	TERMINAL-STUD SGL-TUR PRESS-MTG	28480	0360-1682
A15TP4	0360-1682	0	1	TERMINAL-STUD SGL-TUR PRESS-MTG	28480	0360-1682
A15U1	1810-0446	8	1	NETWORK-RES 8-SIP 1.5K OHM X 7	11236	750-81-1.5K
A15U2	1810-0446	8	1	NETWORK-RES 8-SIP 1.5K OHM X 7	11236	750-81-1.5K
A15U3	1810-0446	8	1	NETWORK-RES 8-SIP 1.5K OHM X 7	11236	750-81-1.5K
A15U4	1820-1197	9	1	IC GATE TTL LS NAND QUAD 2-INP	01295	SN74LS00N

**Indicates facto y-selected value*

HP Part Number 85660-60209

AI5 Controller

Reference Designation	HP Part Number	CD	Qty	Description	Mfr Code	Mfr Part Number
A15U5	1820-3401	2	1	IC BFR TTL ALS OR QUAD 2-INP	28480	1820-3401
A15U6	1820-2551	1	1	IC-GENERAL PURPOSE INTERFACE BUS ADAPTER	28480	1820-2551
A15U7	1820-1199	1	1	IC INV TTL LS HEX I-INP	01295	SN74LS04N
A15U8	1820-1216	3	1	IC DCDR TTL LS 3-TO-8-LINE 3-INP	01295	SN74LS138N
A15U9	1820-3449	8	1	IC-PARALLEL INTERFACE/TIMER/8MHZ/MC68000	28480	1820-3449
A15U10	1820-2102	8	1	IC LCH TTL LS D-TYPE OCTL	01295	SN74LS373N
A15U11	1820-1997	7	1	IC FF TTL LS D-TYPE POS-EDGE-TRIG PRL-IN	01295	SN74LS374N
A15U12	1820-1208	3	1	IC GATE TTL LS OR QUAD 2-INP	01295	SN74LS32N
A15U13	1820-1203	8	1	IC GATE TTL LS AND TPL 3-INP	01295	SN74LS11N
A15U14	1818-3183	2	1	IC CMOS 65536 (64K) STAT RAM 150-NS 3-S	28480	1818-3183
A15U14	1818-3305	C	0	ALTERNATE - IC CMOS 65536 (64K) STAT RAM	28480	1818-3305
A15U15	1818-3183	2	1	IC CMOS 65536 (64K) STAT RAM 150-NS 3-S	28480	1818-3183
A15U15	1818-3305	C	0	ALTERNATE - Ic CMOS 65536 (64K) STAT RAM	28480	1818-3305
A15U17	1818-3183	2	1	IC CMOS 65536 (64K) STAT RAM 150-NS 3-s	28480	1818-3183
A15U17	1818-3305	C	0	ALTERNATE-IC CMOS 65536 (64K) STAT RAM	28480	1818-3305
A15U18	1818-3183	2	1	Ic CMOS 65536 (64K) STAT RAM 150-NS 3-s	28480	1818-3183
A15U18	1818-3305	0	0	ALTERNATE-IC CMOS 65536 (64K) STAT RAM	28480	1818-3305
A15U20	5180-2330	C	1	IC16R4 PAL PRGMD	28480	5180-2330
A15U21	1810-0205	7	1	VETWORK-RES 8-SIP4.7K OHM X 7	01121	208A472
A15U22	1820-2024	3	1	IC DRVR TTL LS LINE DRVR OCTL	01295	SN74LS244N
A15U23	1810-0394	5	1	VETWORK-RES 8-SIP6.8K OHM X 7	01121	208A682
A15U24	1820-1851	2	1	IC ENCDR TTL LS	01295	SN74LS148N
A15U25	1810-0205	7	1	YETWORK-RES 8-SIP4.7K OHM X 7	01121	208A472
A15U26	1820-2505	5	1	IC-MPU; CLK FREQ=8MHZ, INSTRUCTION	28480	1820-2505
A15U27	1820-3173	5	1	IC FF CMOS/74HC J-K NEG-EDGE-TRIG	28480	1820-3173
A15U28	1820-1281	2	1	IC DCDR TTL LS 2-TO-4-LINE DUAL 2-INP	01295	SN74LS139N
A15U29	1810-0205	7	1	VETWORK-RES 8-SIP4.7K OHM X 7	01121	208A472
A15U30	1820-2483	8	1	IC RCVR TTL LS BUS OCTL	01295	SN75161N
A15U31	1820-3431	8	1	IC TRANSCEIVER TTL S INSTR-BUS IEEE-488	28480	1820-3431
A15U32	1820-2675	0	1	IC RCVR TTL LS BUS OCTL	01295	SN74LS646N
A15U33	1810-0279	5	1	IETWORK-RES 10-SIP 4.7K OHM X 9	01121	210A472
A15U34	1820-1997	7	1	IC FF TTL LS D-TYPE POS-EDGE-TRIG PRL-IN	01295	SN74LS374N
A15U35	1820-1112	8	1	IC FF TTL LS D-TYPE POS-EDGE-TRIG	01295	SN74LS74AN
A15U36	1820-2675	0	1	IC RCVR TTL LS BUS OCTL	01295	SN74LS646N
A15U37	35660-80053	3	1	EPROM PRGMD U37	28480	85660-80053
A15U38	35660-80055	5	1	EPROM PRGMD U38	28480	85660-80055
A15U39	35660-80054	4	1	EPROM PROG U39	28480	85660-80054
A15U40	35660-80056	6	1	EPROM PRGMD U40	28480	85660-80056
A15U41	1810-0344	5	1	IETWORK-RES 10-SIP6.8K OHM X 9	01121	210A682
A15U42	35660-80070	4	1	IC1618 PAL PRGMD	28480	85660-80070
A15U43	1826-0759	9	1	IC COMPARATOR GP QUAD 14-DIP-C PKG	04713	LM339J
A15U44	1810-0205	7	1	IETWORK-RES 8-SIP4.7K OHM X 7	01121	208A472
A15U45	1820-3562	6	1	IC BFR TTL ALS INV HEX	28480	1820-3562
A15U46	1810-0205	7	1	IETWORK-RES 8-SIP4.7K OHM X 7	01121	208A472
A15U47	1820-1208	3	1	IC GATE TTL L8 OR QUAD 2-INP	01295	SN74LS32N
A15U48	1826-0393	7	1	IC V RGLTR-ADJ-PDS 1.2/37V TO-220 PKG	27014	LM317T
A15W2	8159-0005	0	1	RESISTOR-ZERO OHMS 22 AWG LEAD DIA	28480	8159-0005

**Indicates factoy-selected value*

HP Part Number 85660-60209

Al5 Controller

Reference Designation	HP Part Number	C D	Qty	Description	Mfr Code	Mfr Part Number
A15Y1	.813-0196	1	1	XTAL-CLOCK-OSCILLATOR 14.7456-MHZ	28480	1813-0196

**Indicates factoy-selected value*

HP Part Number 85660-60245

Al 5 Controller

Reference Designation	HP Part Number	C D	Qty	Description	Mfr Code	Mfr Part Number
A15	85660-60245	3	1	BOARD ASSEMBLY, CONTROLLER (SERIAL PREFIX: 2503A)	28480	85660-60245
A15BT1	1420-0331	3	1	BATTERY 3.68V 1.75A-HR LITHIUM THIONYL		15-51-04-410-000
A15C1	0160-4554	7	1	CAPACITOR-FXD 0.01uF 50 VDC +-20% CER	04222	SA105C103MAAH
A15C2	0160-4554	7	1	CAPACITOR-FXD 0.01uF 50 VDC +-20% CER	04222	SA105C103MAAH
A15C3	0160-4554	7	1	CAPACITOR-FXD 0.01uF 50 VDC +-20% CER	04222	SA105C103MAAH
A15C4	0160-4554	7	1	CAPACITOR-FXD 0.01uF 50 VDC +-20% CER	04222	SA105C103MAAH
A15C5	0160-4554	7	1	CAPACITOR-FXD 0.01uF 50 VDC +-20% CER	04222	SA105C103MAAH
A15C6	0160-4554	7	1	CAPACITOR-FXD 0.01uF 50 VDC +-20% CER	04222	SA105C103MAAH
A15C7	0160-4554	7	1	CAPACITOR-FXD 0.01uF 50 VDC +-20% CER	04222	SA105C103MAAH
A15C8	0160-4554	7	1	CAPACITOR-FXD 0.01uF 50 VDC +-20% CER	04222	SA105C103MAAH
A15C10	0160-4554	7	1	CAPACITOR-FXD 0.01uF 50 VDC +-20% CER	04222	SA105C103MAAH
A15C11	0160-4554	7	1	CAPACITOR-FXD 0.01uF 50 VDC +-20% CER	04222	SA105C103MAAH
A15C12	0160-4554	7	1	CAPACITOR-FXD 0.01uF 50 VDC +-20% CER	04222	SA105C103MAAH
A15C13	0160-4554	7	1	CAPACITOR-FXD 0.01uF 50 VDC +-20% CER	04222	SA105C103MAAH
A15C15	0160-4554	7	1	CAPACITOR-FXD 0.01uF 50 VDC +-20% CER	04222	SA105C103MAAH
A15C17	0160-4554	7	1	CAPACITOR-FXD 0.01uF 50 VDC +-20% CER	04222	SA105C103MAAH
A15C18	0160-4554	7	1	CAPACITOR-FXD 0.01uF 50 VDC +-20% CER	04222	SA105C103MAAH
A15C19	0160-4554	7	1	CAPACITOR-FXD 0.01uF 50 VDC +-20% CER	04222	SA105C103MAAH
A15C20	0160-4554	7	1	CAPACITOR-FXD 0.01uF 50 VDC +-20% CER	04222	SA105C103MAAH
A15C22	0160-4554	7	1	CAPACITOR-FXD 0.01uF 50 VDC +-20% CER	04222	SA105C103MAAH
A15C23	0160-4554	7	1	CAPACITOR-FXD 0.01uF 50 VDC +-20% CER	04222	SA105C103MAAH
A15C24	0160-4574	1	1	CAPACITOR-FXD 1000PF +-10% 100VDC CER	04222	SA101C102KAAH
A15C25	0160-4535	4	1	CAPACITOR-FXD 1UF +-10% 50VDC CER	04222	SR305C105KAAH
A15C29	0160-4801	7	1	CAPACITOR-FXD 100PF +-5% 100VDC CER 0+-3	04222	SA102A101JAAH
A15C30	0160-4832	4	1	CAPACITOR-FXD .01UF +-10% 100VDC CER	04222	SA101C103KAAH
A15C31	0160-4808	4	1	CAPACITOR-FXD 470PF +-5% 100VDC CER 0+-3	04222	SA101A471JAAH
A15C32	0180-2207	5	1	CAPACITOR-FXD 100UF+-10% 10VDC TA	56289	150D107X9010R2-DYS
A15C34	0160-4801	7	1	CAPACITOR-FXD 100PF +-5% 100VDC CER 0+-3	04222	SA102A101JAAH
A15CR3	1901-0518	8	1	DIODE-SCHOTTKY SM SIG	28480	
A15DS1	1990-0958	7	1	LED-LAMP IF=7MA-MAX BVR=5V	28480	HLMP-1700
A15DS2	1990-0958	7	1	LED-LAMP IF=7MA-MAX BVR=5V	28480	HLMP-1700
A15DS3	1990-0958	7	1	LED-LAMP IF=7MA-MAX BVR=5V	28480	HLMP-1700
A15DS4	1990-0958	7	1	LED-LAMP IF=7MA-MAX BVR=5V	28480	HLMP-1700
A15DS5	1990-0958	7	1	LED-LAMP IF=7MA-MAX BVR=5V	28480	HLMP-1700
A15DS6	1990-0958	7	1	LED-LAMP IF=7MA-MAX BVR=5V	28480	HLMP-1700
A15DS7	1990-0958	7	1	LED-LAMP IF=7MA-MAX BVR=5V	28480	HLMP-1700
A15DS8	1990-0958	7	1	LED-LAMP IF=7MA-MAX BVR=5V	28480	HLMP-1700
A15DS9	1990-0958	7	1	LED-LAMP IF=7MA-MAX BVR=5V	28480	HLMP-1700
A15DS10	1990-0958	7	1	LED-LAMP IF=7MA-MAX BVR=5V	28480	HLMP-1700
A15DS11	1990-0958	7	1	LED-LAMP IF=7MA-MAX BVR=5V	28480	HLMP-1700
A15DS12	1990-0958	7	1	LED-LAMP IF=7MA-MAX BVR=5V	28480	HLMP-1700
A15DS13	1990-0958	7	1	LED-LAMP IF=7MA-MAX BVR=5V	28480	HLMP-1700
A15DS14	1990-0958	7	1	LED-LAMP IF=7MA-MAX BVR=5V	28480	HLMP-1700
A15E1	1251-4787	2	1	SHUNT-DIP 8 POSITION DUAL INLINE PKG	00779	435704-8
41551	1251-5926	3	1	CONN-POST TYPE .100-PIN-SPCG 50-CONT	18873	67997-650
41552	1251-5905	8	1	CONN-POST TYPE .100-PIN-SPCG 24-CONT	18873	67997-624

**Indicates factoy-selected value*

HP Part Number 85660-60245

A15 Controller

Reference Designation	HP Part Number	C. D	Qty	Description	Mfr Code	Mfr Part Number
A15J3	1200-0607	C	1	16-PIN IC SOCKET	00779	641600-1/TUBED 2-641600
A15J5	1251-5619	I	1	CONN-POST TYPE .100-PIN-SPCG 4-CONT	18873	68000-604
A15L1	9140-0875	4	1	INDUCTOR 80uH 10%	28480	9140-0875
A15MP1	1400-1267	4	1	HOLDER-BAT .531-.656-DIA FOR AA CELLS	91833	91
A15MP3	1480-0073	6	2	PIN-ROLL .062-IN-DIA .25-IN-LG BE-CU	72962	99-012-062-0250
A15MP4	4040-0749	4	1	EXTR-PC BD BRN POLYC .062-IN-BD-THKNS 1-		
A15MP5	4040-0753	C	1	EXTR-PC BD GRN POLYC .062-IN-BD-THKNS 1-		
A15MP6	0361-0026	6	1	RIVET-SEMITUB DVH .089DIA .125LG	12014	R-4008-1/8
A15MP11	1200-0567	1	1	SOCKET-IC 28-CONT DIP DIP-SLDR	00779	2-641605-l
A15Q1	1854-0477	7	1	TRANSISTOR NPN 2N2222A SI TO-18 PD=500MW	04713	2N2222A
A15Q2	1853-0213	7	1	TRANSISTOR PNP 2N4236 SI TO-5 PD=1W	04713	2N4236
A15R2	0757-0442	9	1	RESISTOR 10K +-1% .125W TF TC=O+-100	2M627	CRB14 OR CRB25
A15R3	0698-3157	3	1	RESISTOR 19.6K 1% .125W TF TC=O+-100	2M627	CR814 OR CRB25
A15R4	0698-3260	9	1	RESISTOR 464K 1% .125W TF TC=O+-100	2M627	CRB14 OR CRB25
A15R5	0757-0280	3	1	RESISTOR 1K +-1% .125W TF TC=O+-100	2M627	CRB14 OR CRB25
A15R6	0757-0442	9	1	RESISTOR 10K +-1% .125W TF TC=O+-100	2M627	CRB14 OR CRB25
A15R7	0757-0442	9	1	RESISTOR 10K +-1% .125W TF TC=O+-100	2M627	CRB14 OR CR825
A15R8	0757-0442	9	1	RESISTOR 10K +-1% .125W TF TC=O+-100	2M627	CR814 OR CRB25
A15R9	0698-3260	9	1	RESISTOR 464K 1% .125W TF TC=O+-100	2M627	CRB14 OR CR825
A15R10	0757-0280	3	1	RESISTOR 1K +-1% .125W TF TC=O+-100	2M627	CRB14 OR CRB25
A15R11	3757-0280	3	1	RESISTOR 1K +-1% .125W TF TC=O+-100	2M627	CRB14 OR CRB25
A15R12	3757-0401	0	1	RESISTOR 100 +-1% .125W TF TC=O+-100	2M627	CRB14 OR CRB25
A15R13	0698-3440	7	1	RESISTOR 196 1% .125W TF TC=O+-100	2M627	CRB14 OR CRB25
A15R14	0757-0401	0	1	RESISTOR 100 +-1% .125W TF TC=O+-100	2M627	CRB14 OR CRB25
A15R18	1757-0280	3	1	RESISTOR 1K +-1% .125W TF TC=O+-100	2M627	CRB14 OR CRB25
A15R19	1698-3155	1	1	RESISTOR 4.64K 1% .125W TF TC=O+-100	2M627	CRB14 OR CRB25
A15R21	1698-7212	9	1	RESISTOR 100 +-1% .05W TF TC=O+-100	19701	50635
A15SW1	3101-2197	9	1	SWITCH-DIP RKR 6-1A 0.05A 30VDC	81073	76YY2346S
A15TP1	1252-0569	2	1	CONN-POST TYPE .150-PIN-SPCG 9-CONT	00779	87221-8
A15TP2	1251-8427	5	1	CONN-POST TYPE .150-PIN-SPCG 5-CONT	00779	87221-4
A15U1	1810-0446	8	1	NETWORK-RES 8-SIP 1.5K OHM X 7	11236	750-81
A15U2	1810-0446	8	1	NETWORK-RES 8-SIP 1.5K OHM X 7	11236	750-81
A15U3	1810-0446	8	1	NETWORK-RES 8-SIP 1.5K OHM X 7	11236	750-81
A15U4	1820-1197	9	1	IC GATE TTL LS NAND QUAD 2-INP	01295	SN74LS00N
A15U5	1820-3401	2	1	IC BFR TTL ALS OR QUAD 2-INP	01295	SN74ALS1032AN
A15U6	1820-2548	6	1	IC-GENERAL PURPOSE INTERFACE BUS ADAPTER	01295	TMS9914ANL
A15U7	1820-1199	1	1	IC INV TTL LS HEX 1-INP	01295	SN74LS04N
A15U8	1820-1216	3	1	IC DCDR TTL LS 3-TO-8-LINE 3-INP	01295	SN74LS138N
A15U9	1820-3449	8	1	IC-PARALLELINTERFACE/TIMER/8MHZ/MC68000	04713	MC68230L8
A15U10	1820-2102	8	1	IC LCH TTL LS D-TYPE OCTL	01295	SN74LS373N
A15U11	1820-1997	7	1	IC FF TTL LS D-TYPE POS-EDGE-TRIG PRL-IN	01295	SN74LS374N
A15U12	1820-1208	3	1	IC GATE TTL LS OR QUAD 2-INP	01295	SN74LS32N
A15U13	1820-1203	8	1	IC GATE TTL LS AND TPL 3-INP	01295	SN74LS11N
A15U14	1818-3183	2	1	IC CMOS 65536 (64K) STAT RAM 150-NS 3-S	SD545	UPD4364C-15L
A15U14	1818-3305	D	0	ALTERNATE-IC CMOS 65536 (64K) STAT RAM	SO562	TC5565APL-15
A15U15	1818-3183	2	1	IC CMOS 65536 (64K) STAT RAM 150-NS 3-S	so545	UPD4364C-15L
A15U15	1818-3305	D	0	ALTERNATE-IC CMOS 65536 (64K) STAT RAM	SO562	TC5565APL-15
A15U17	1818-3183	2	1	IC CMOS 65536 (64K) STAT RAM 150-NS 3-S	so545	UPD4364C-15L

**Indicates facto y-selected value*

HP Part Number 85660-60245

Al 5 Controller

Reference Designation	HP Part Number	C D	Qty	Description	Mfr Code	Mfr Part Number
A15U17	1818-3305		0	ALTERNATE-IC CMOS 65536 (64K) STAT RAM	S0562	TC5565APL-15
A15U18	1818-3183		1	Ic CMOS 65536 (64K) STAT RAM 150-NS 3-s	S0545	UPD4364C-15L
A15U18	1818-3305		0	ALTERNATE-IC CMOS 65536 (64K) STAT RAM	S0562	TC5565APL-15
A15U20	5180-2330		1	IC 16R4 PAL PRGMD	28480	5180-2330
A15U21	1810-0205		1	NETWORK-RES 8-SIP 4.7K OHM X 7	11236	750-81
A15U22	1820-2024		1	IC DRVR TTL LS LINE DRVR OCTL	01295	SN74LS244N
A15U23	1810-0394		1	NETWORK-RES 8-SIP 6.8K OHM X 7	11236	750-81
A15U24	1820-1851		1	IC ENCDR TTL LS	01295	SN74LS148N
A15U25	1810-0205		1	NETWORK-RES 8-SIP 4.7K OHM X 7	11236	750-81
A15U26	1820-3532		1	IC-16 BIT MICROPROCESSOR /8 MHZ	04713	MC68000P8
A15U27	1820-3173		1	IC FF CMOS/74HC J-K NEG-EDGE-TRIG PRESET	04713	MC74HC112N
A15U28	1820-1281		1	IC DCDR TTL LS 2-TO-4-LINE DUAL	01295	SN74LS139AN
A15U29	1810-0205		1	NETWORK-RES 8-SIP 4.7K OHM X 7	11236	750-81
A15U30	1820-3513		1	IC-INTERFACE XCVR BCD UP/DOWN INSTRUMENT	27014	DS75161AN
A15U31	1820-3431		1	IC-INTERFACE XCVR BCD UP/DOWN INSTRUMENT	27014	DS75160AN
A15U32	1820-2675		1	IC TRANSCEIVER TTL LS BUS OCTL	01295	SN74LS646NT
A15U33	1810-0279		1	NETWORK-RES 10-SIP 4.7K OHM X 9	11236	750-101
A15U34	1820-1997		1	IC FF TTL LS D-TYPE PDS-EDGE-TRIG PRL-IN	01295	SN74LS374N
A15U35	1820-1112		1	IC FF TTL LS D-TYPE PDS-EDGE-TRIG PRESET	01295	SN74LS74AN
A15U36	1820-2675		1	IC TRANSCEIVER TTL LS BUS OCTL	01295	SN74LS646NT
A15U37	85660-80185		1	EPROM PRGMD	28480	85660-80185
A15U38	85660-80187		1	EPROM PRGMD	28480	85660-80187
A15U39	85660-80186		1	EPROM PRGMD	28480	85660-80186
A15U40	85660-80188		1	EPROM PRGMD	28480	85660-80188
A15U41	1810-0344		1	NETWORK-RES 10-SIP 6.8K OHM X 9	11236	750-101
A15U42	85660-80070		1	IC1618 PAL PRGMD	28480	85660-80070
A15U43	1826-0759		1	IC COMPARATOR GP QUAD 14-DIP-C PKG	04713	LM339J
A15U44	1810-0205		1	NETWORK-RES 8-SIP 4.7K OHM X 7	11236	750-81
A15U45	1820-3562		1	IC BFR TTL ALS INV HEX	01295	SN74ALS1005N
A15U46	1810-0205		1	NETWORK-RES 8-SIP 4.7K OHM X 7	11236	750-81
A15U47	1820-1208		1	IC GATE TTL LS OR QUAD 2-INP	01295	SN74LS32N
A15Y1	1813-0196		1	CLOCK-OSCILLATOR-CRYSTAL 14.7456-MHZ	28480	1813-0196
A15Y1	1813-0129		0	CLOCK-OSCILLATOR-XTAL 14.7456-MHZ 0.01% (ALTERNATE PART FOR 1813-0196)	00815	HS-100(14.7456MHZ)

**Indicates factoy-selected value*

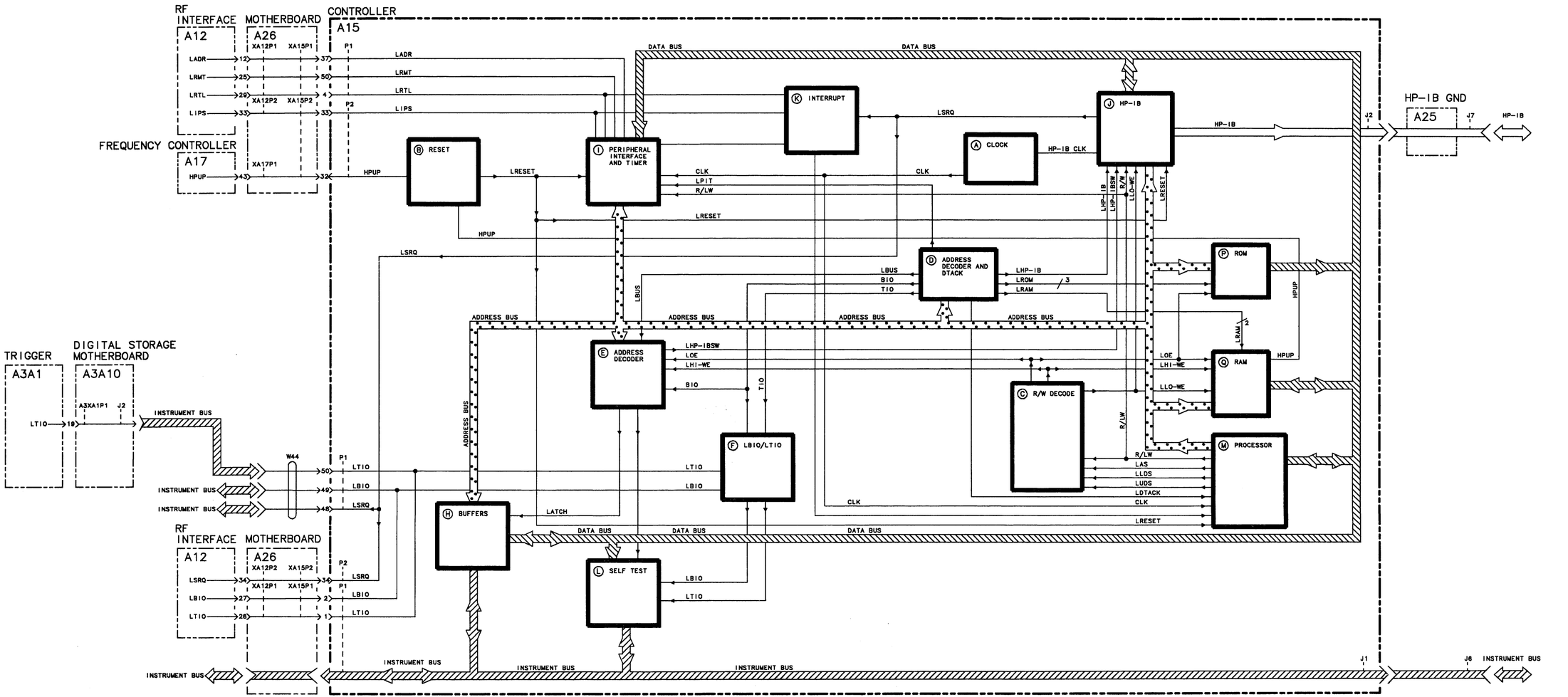

A15 CONTROLLER, BLOCK DIAGRAM

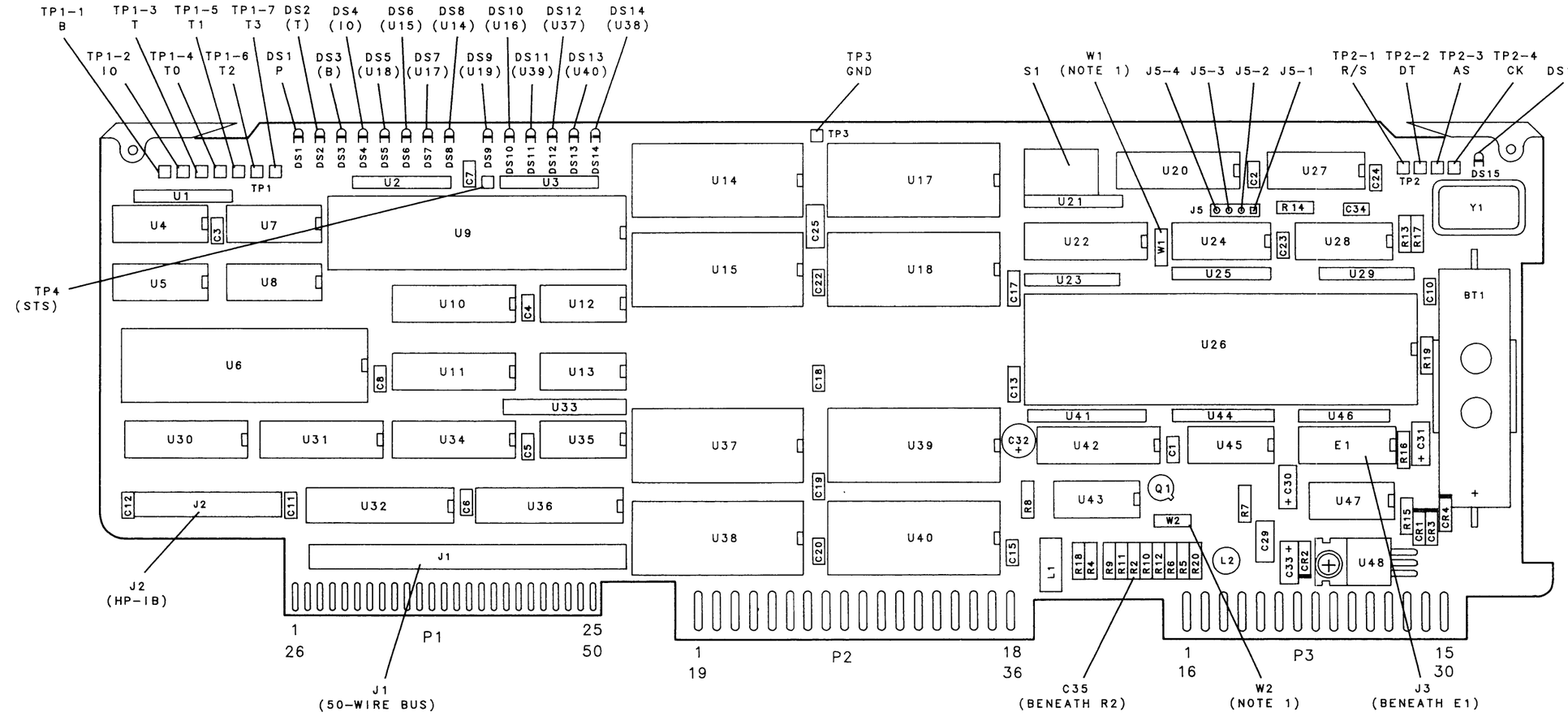

NOTES:

1. JUMPER W1 IS LOADED WHEN 128K ROMS (SET OF SIX) ARE INSTALLED; W2 IS LOADED WHEN 256K ROMS (SET OF FOUR) ARE INSTALLED.

A15 CONTROLLER BOARD ASSEMBLY, COMPONENT LOCATIONS:85660-60209

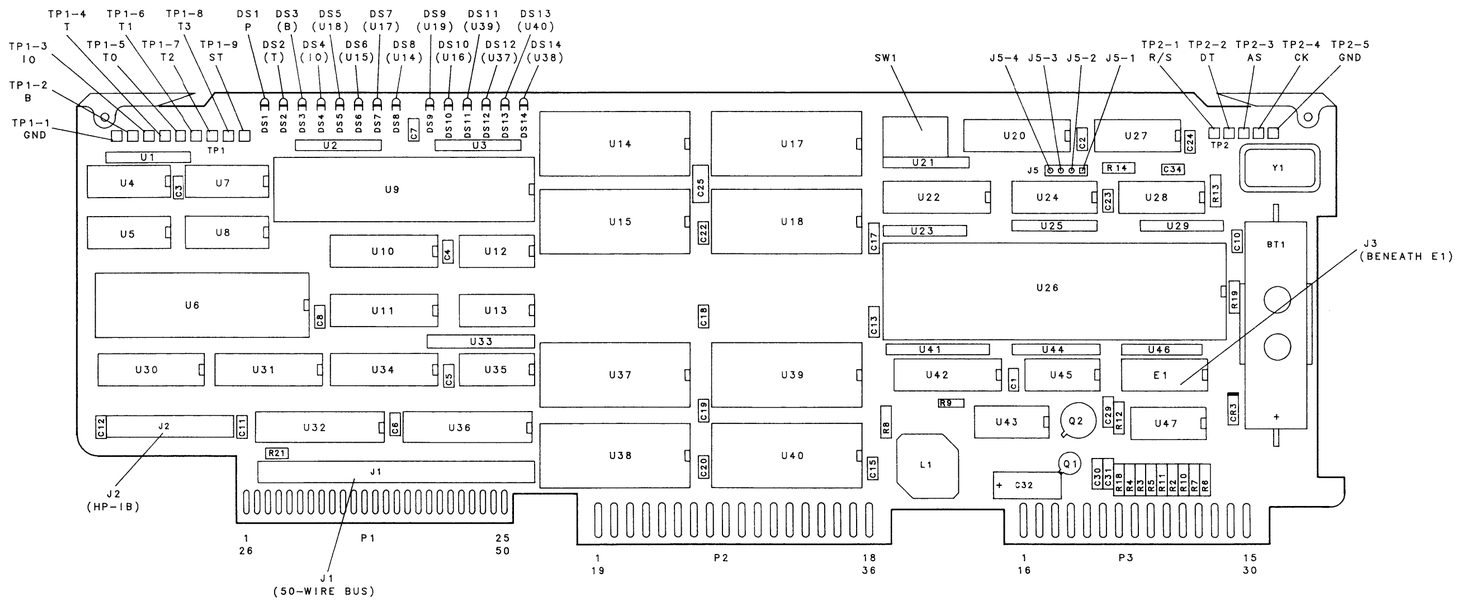

A15 CONTROLLER, COMPONENT LOCATIONS:85660-60245

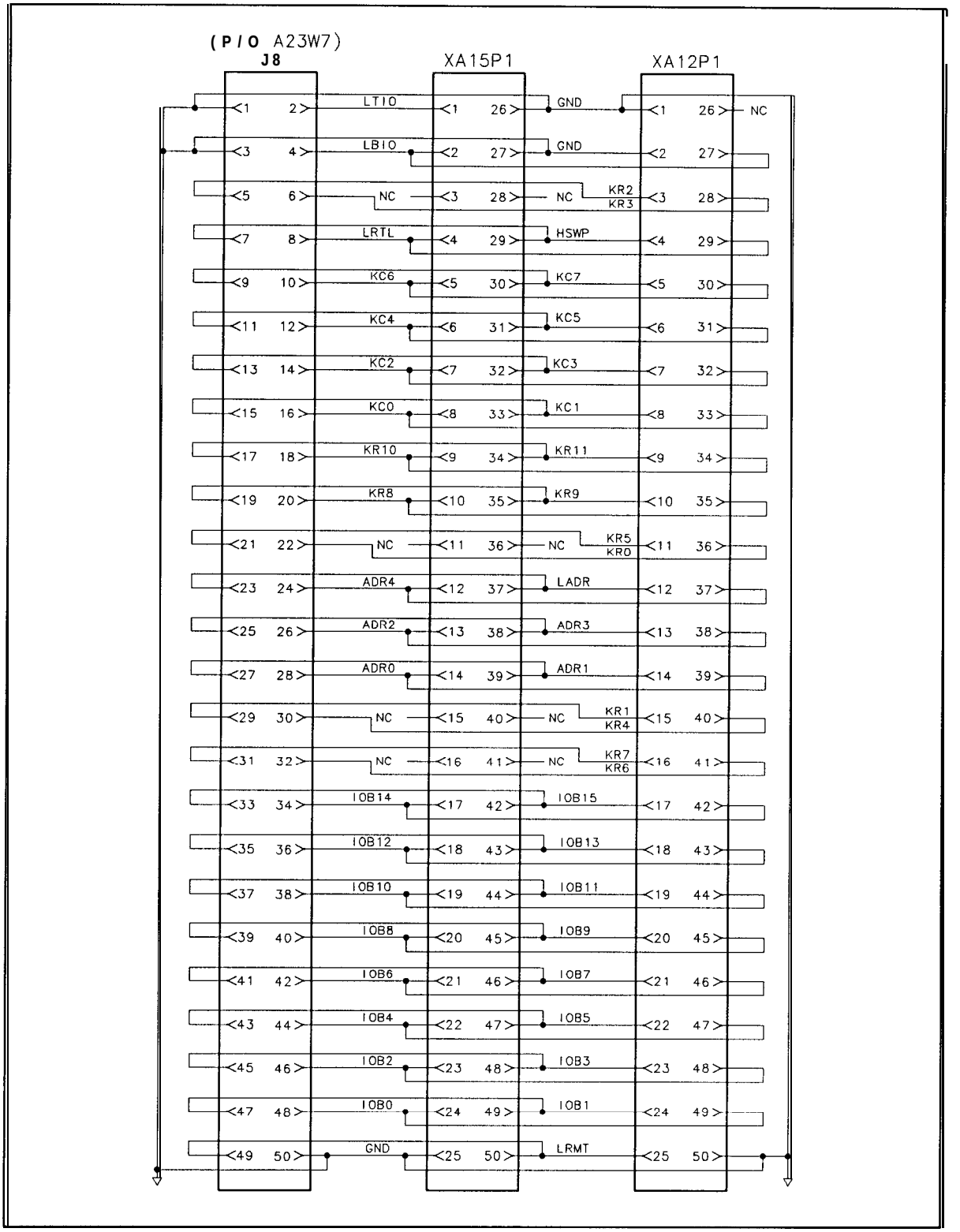

A23 Motherboard Instrument Bus, Interconnect Diagram

A15 CONTROLLER
85660-60209
(SHEET 1 OF 3)
(SERIAL PREFIXES: 2410A-2449A)

P1

PIN	SIGNAL	TO/FROM	FUNCTION BLOCK
1	LTIO	A12P1-26	F
26	GND		R
2	LBIO	A12P1-27	F
27	GND		R
3	NC		
28	NC		
4	LRTL	A5A1P1-43	I
29	HSWP	A12P1-4	S
5	KC6	A12P1-30	S
30	KC7	A12P1-5	S
6	KC4	A12P1-31	S
31	KC5	A12P1-6	S
7	KC2	A12P1-32	S
32	KC3	A12P1-7	S
8	KCØ	A12P1-33	S
33	KC1	A12P1-8	S
9	KR1Ø	A12P1-34	S
34	KR11	A12P1-9	S
10	KR8	A12P1-35	S
35	KR9	A12P1-10	S
11	NC		
36	NC		
12	ADR4	A12P1-37	H
37	LADR	A5A1P1-28	I
13	ADR2	A12P1-38	H
38	ADR3	A12P1-13	H
14	ADRØ	A12P1-39	H
39	ADR1	A12P1-14	H
15	NC		
40	NC		
16	NC		
41	NC		
17	IOB14	A12P1-42	H
42	IOB15	A12P1-17	H
18	IOB12	A12P1-43	H
43	IOB13	A12P1-18	H
19	IOB1Ø	A12P1-44	H
44	IOB11	A12P1-19	H
20	IOB8	A12P1-45	H
45	IOB9	A12P1-20	H
21	IOB6	A12P1-46	H
46	IOB7	A12P1-21	H
22	IOB4	A12P1-47	H
47	IOB5	A12P1-22	H
23	IOB2	A12P1-48	H
48	IOB3	A12P1-23	H
24	IOBØ	A12P1-49	H
49	IOB1	A12P1-24	H
25	GND		R
50	LRMT	A12P1-25	I

P2

PIN	SIGNAL	TO/FROM	FUNCTION BLOCK
1	GND		R
19	LBIO		F
2	ADRØ		H
20	ADR1		H
3	ADR2		H
21	ADR3		H
4	ADR4		H
22	NC		H
5	IOBØ		H
23	IOB1		H
6	IOB2		H
24	IOB3		H
7	IOB4		H
25	IOB5		H
8	IOB6		H
26	IOB7		H
9	IOB8		H
27	IOB9		H
10	IOB1Ø		H
28	IOB11		H
11	IOB12		H
29	IOB13		H
12	IOB14		H
30	IOB15		H
13	NC		
31	NC		
14	GND		R
32	HPUP	A17P1-43	B
15	NC		
33	LIPS	A12P2-8	I
16	NC		
34	LSRQ	A12P2-16	J
17	+5.2V		R
35	+5.2V		R
18	GND		R
36	GND		R

INSTRUMENT BUS

P3

PIN	SIGNAL	TO/FROM	FUNCTION BLOCK
1	NC		
16	NC		
2	GND		R
17	GND		R
3	+12V		R
18	+12V		R
4	-5.2		NC
19	-5.2		NC
5	NC		
20	NC		
6	NC		
21	NC		
7	NC		
22	NC		
8	NC		
23	NC		
9	NC		
24	NC		
10	NC		
25	NC		
11	NC		
26	NC		
12	NC		
27	NC		
13	NC		
28	NC		
14	NC		
29	NC		
15	GND		R
30	GND		R

J1

PIN	SIGNAL	TO FROM	FUNCTION BLOCK
1	NC		
2	IOB1	A4A10J1-4	H
3	IOB3	A4A10J1-6	H
4	IOB5	A4A10J1-8	H
5	IOB7	A4A10J1-10	H
6	IOB9	A4A10J1-12	H
7	IOB11	A4A10J1-14	H
8	IOB13	A4A10J1-16	H
9	IOB15	A4A10J1-18	H
10	LADR	NC	I
11	HPON	A1A9J1-22	R
12	ADR1	A4A10J1-24	H
13	ADR3	A4A10J1-26	H
14	NC		
15	NC		
16	KR9	A1A1J1-33	S
17	KR11	A1A1J1-31	S
18	KC1	A1A1J1-41	S
19	KC3	A1A1J1-39	S
20	KC5	A1A1J1-37	S
21	KC7	A1A1J1-35	S
22	HSWP	A3A1P1-21	S
23	LDSR	A3A10J1-46	J
24	GND		R
25	GND		R
26	GND		R
27	IOBØ	A4A10J1-3	H
28	IOB2	A4A10J1-5	H
29	IOB4	A4A10J1-7	H
30	IOB6	A4A10J1-9	H
31	IOB8	A4A10J1-11	H
32	IOB1Ø	A4A10J1-13	H
33	IOB12	A4A10J1-15	H
34	IOB14	A4A10J1-17	H
35	NC		
36	NC		
37	ADRØ	A4A10J1-23	H
38	ADR2	A4A10J1-25	H
39	ADR4	A4A10J1-27	H
40	NC		
41	KR8	A1A1J1-34	S
42	KR1Ø	A1A1J1-32	S
43	KCØ	A1A1J1-42	S
44	KC2	A1A1J1-40	S
45	KC4	A1A1J1-38	S
46	KC6	A1A1J1-36	S
47	NC		
48	LSRQ	A1A9J1-45	J
49	LBIO	A1A9J1-47	F
50	LTIO	A3A10J2-49	F

J2

PIN	SIGNAL	TO FROM	FUNCTION BLOCK
1	DIO1	J5-1	J
2	DIO2	J5-2	J
3	DIO3	J5-3	J
4	DIO4	J5-4	J
5	EOI	J5-5	J
6	DAV	J5-6	J
7	NRFD	J5-7	J
8	NDAC	J5-8	J
9	IFC	J5-9	J
10	SRQ	J5-10	J
11	ATN	J5-11	J
12	NC	SEE NOTE 5	
13	DIO5	J5-13	J
14	DIO6	J5-14	J
15	DIO7	J5-15	J
16	DIO8	J5-16	J
17	REN	J5-17	J
18	NC	SEE NOTE 5	
19	NC	SEE NOTE 5	
20	NC	SEE NOTE 5	
21	NC	SEE NOTE 5	
22	NC	SEE NOTE 5	
23	NC	SEE NOTE 5	
24	NC	SEE NOTE 5	

NOTES:

1. REFERENCE DESIGNATORS WITHIN THIS ASSEMBLY ARE ABBREVIATED. FOR COMPLETE REFERENCE DESIGNATION, PREFIX ABBREVIATION WITH ASSEMBLY DESIGNATION.
2. UNLESS OTHERWISE INDICATED:
   RESISTANCE IS IN OHMS (Ω)
   CAPACITANCE IS IN MICROFARADS (μF)
   INDUCTANCE IS IN MICROHENRIES (μH)
3. UNLESS OTHERWISE INDICATED:
   SIGNALS ENTER AT LEFT SIDE OR TOP, AND EXIT RIGHT SIDE OR BOTTOM OF FUNCTION BLOCKS.
4. JUMPER W1 IS LOADED WHEN 128K ROMS (SET OF SIX) ARE INSTALLED; W2 IS LOADED WHEN 256K ROMS (SET OF FOUR) ARE INSTALLED.
5. PINS 12, 18-24 ARE CHASSIS GROUNDED THRU A29.

6. MNEMONIC TABLE:

MNEMONIC	DESCRIPTION
ADRØ	INSTRUMENT BUS ADDRESS BIT Ø
ADR1	INSTRUMENT BUS ADDRESS BIT 1
ADR2	INSTRUMENT BUS ADDRESS BIT 2
ADR3	INSTRUMENT BUS ADDRESS BIT 3
ADR4	INSTRUMENT BUS ADDRESS BIT 4
ATN	LOW=ATTENTION
DAV	LOW=DATA VALID
DIO1	HP-IB DATA INPUT/OUTPUT
DIO2	HP-IB DATA INPUT/OUTPUT
DIO3	HP-IB DATA INPUT/OUTPUT
DIO4	HP-IB DATA INPUT/OUTPUT
DIO5	HP-IB DATA INPUT/OUTPUT
DIO6	HP-IB DATA INPUT/OUTPUT
DIO7	HP-IB DATA INPUT/OUTPUT
DIO8	HP-IB DATA INPUT/OUTPUT
EOI	LOW=END OR IDENTIFY
HPON	HIGH=IF-DISPLAY SECTION POWER ON
HPUP	HIGH=POWER UP
IFC	LOW=INTERFACE CLEAR
IOBØ	INSTRUMENT BUS DATA BIT Ø
IOB1	INSTRUMENT BUS DATA BIT 1
IOB2	INSTRUMENT BUS DATA BIT 2
IOB3	INSTRUMENT BUS DATA BIT 3
IOB4	INSTRUMENT BUS DATA BIT 4
IOB5	INSTRUMENT BUS DATA BIT 5
IOB6	INSTRUMENT BUS DATA BIT 6
IOB7	INSTRUMENT BUS DATA BIT 7
IOB8	INSTRUMENT BUS DATA BIT 8
IOB9	INSTRUMENT BUS DATA BIT 9
IOB1Ø	INSTRUMENT BUS DATA BIT 1Ø
IOB11	INSTRUMENT BUS DATA BIT 11
IOB12	INSTRUMENT BUS DATA BIT 12
IOB13	INSTRUMENT BUS DATA BIT 13
IOB14	INSTRUMENT BUS DATA BIT 14
IOB15	INSTRUMENT BUS DATA BIT 15
LADR	LOW=ADDRESS LED ON
LBIO	LOW=BOTTOM BOX INPUT/OUTPUT
LDSR	LOW=DIGITAL STORAGE READY
LIPS	LOW=INSTRUMENT PRESET
LRMT	LOW=REMOTE;HIGH=LOCAL
LRTL	LOW=RETURN TO LOCAL
LSRQ	LOW=SERVICE REQUEST
LTIO	LOW=TOP BOX INPUT/OUTPUT
NDAC	HIGH=DATA ACCEPTED
NRFD	HIGH=READY FOR DATA
REN	LOW=REMOTE ENABLE
SRQ	LOW=SERVICE REQUEST

A15 CONTROLLER
85660-60209 (SHEET 2 OF 3)
(SERIAL PREFIXES: 2410A-2449A)

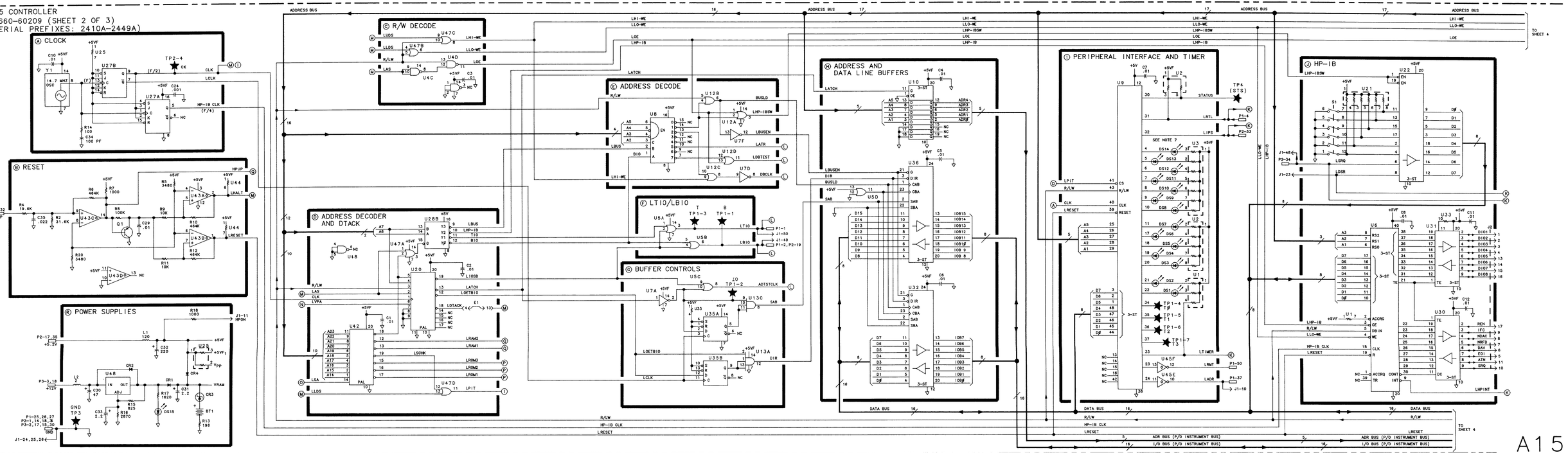

A15

A15 CONTROLLER, SCHEMATIC DIAGRAM (2 OF 3)

A15 CONTROLLER
85660-60209 (SHEET 3 OF 3)
(SERIAL PREFIXES: 2410A-2449A)

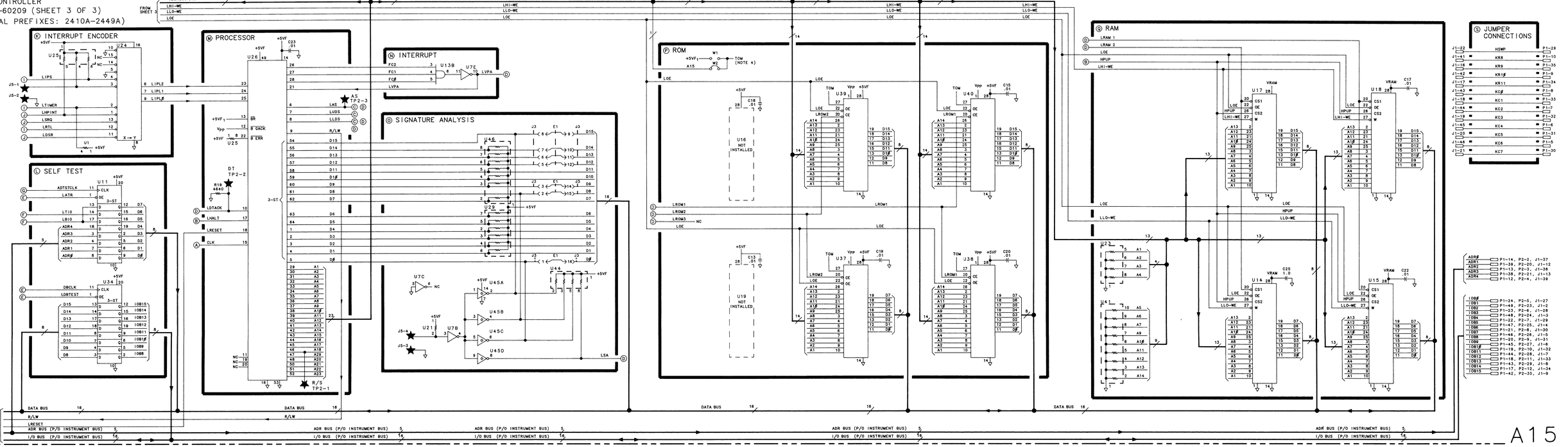

A15

A15 CONTROLLER, SCHEMATIC DIAGRAM (3 OF 3)

A15 CONTROLLER
85660-60245
(SHEET 1 OF 3)
(SERIAL PREFIX: 2503A)

P1

PIN	SIGNAL	TO/FROM	FUNCTION BLOCK
1	LTIO	A12P1-26	F
26	GND		R
2	LBIO	A12P1-27	F
27	GND		R
3	NC		
28	NC		
4	LRTL	A5A1P1-43	I
29	HSWP	A12P1-4	S
5	KC6	A12P1-30	S
30	KC7	A12P1-5	S
6	KC4	A12P1-31	S
31	KC5	A12P1-6	S
7	KC2	A12P1-32	S
32	KC3	A12P1-7	S
8	KCØ	A12P1-33	S
33	KC1	A12P1-8	S
9	KR1Ø	A12P1-34	S
34	KR11	A12P1-9	S
10	KR8	A12P1-35	S
35	KR9	A12P1-10	S
11	NC		
36	NC		
12	ADR4	A12P1-37	H
37	LADR	A5A1P1-28	I
13	ADR2	A12P1-38	H
38	ADR3	A12P1-13	H
14	ADRØ	A12P1-39	H
39	ADR1	A12P1-14	H
15	NC		
40	NC		
16	NC		
41	NC		
17	IOB14	A12P1-42	H
42	IOB15	A12P1-17	H
18	IOB12	A12P1-43	H
43	IOB13	A12P1-18	H
19	IOB1Ø	A12P1-44	H
44	IOB11	A12P1-19	H
20	IOB8	A12P1-45	H
45	IOB9	A12P1-20	H
21	IOB6	A12P1-46	H
46	IOB7	A12P1-21	H
22	IOB4	A12P1-47	H
47	IOB5	A12P1-22	H
23	IOB2	A12P1-48	H
48	IOB3	A12P1-23	H
24	IOBØ	A12P1-49	H
49	IOB1	A12P1-24	H
25	GND		R
50	LRMT	A12P1-25	I

P2

PIN	SIGNAL	TO/FROM	FUNCTION BLOCK
1	GND	INSTRUMENT BUS	R
19	LBIO		F
2	ADRØ		H
20	ADR1		H
3	ADR2		H
21	ADR3		H
4	ADR4		H
22	NC		H
5	IOBØ		H
23	IOB1		H
6	IOB2		H
24	IOB3		H
7	IOB4		H
25	IOB5		H
8	IOB6		H
26	IOB7		H
9	IOB8		H
27	IOB9		H
10	IOB1Ø		H
28	IOB11		H
11	IOB12		H
29	IOB13		H
12	IOB14		H
30	IOB15		H
13	NC		
31	NC		
14	GND		R
32	HPUP	A17P1-43	B
15	NC		
33	LIPS	A12P2-8	I
16	NC		
34	LSRQ	A12P2-16	J
17	+5.2V		R
35	+5.2V		R
18	GND		R
36	GND		R

P3

PIN	SIGNAL	TO/FROM	FUNCTION BLOCK
1	NC		
16	NC		
2	GND		R
17	GND		R
3	+12V		R
18	+12V		R
4	-5.2		NC
19	-5.2		NC
5	NC		
20	NC		
6	NC		
21	NC		
7	NC		
22	NC		
8	NC		
23	NC		
9	NC		
24	NC		
10	NC		
25	NC		
11	NC		
26	NC		
12	NC		
27	NC		
13	NC		
28	NC		
14	NC		
29	NC		
15	GND		R
30	GND		R

J1

PIN	SIGNAL	TO FROM	FUNCTION BLOCK
1	NC		
2	IOB1	A4A10J1-4	H
3	IOB3	A4A10J1-6	H
4	IOB5	A4A10J1-8	H
5	IOB7	A4A10J1-10	H
6	IOB9	A4A10J1-12	H
7	IOB11	A4A10J1-14	H
8	IOB13	A4A10J1-16	H
9	IOB15	A4A10J1-18	H
10	LADR	NC	I
11	HPON	A1A9J1-22	R
12	ADR1	A4A10J1-24	H
13	ADR3	A4A10J1-26	H
14	NC		
15	NC		
16	KR9	A1A1J1-33	S
17	KR11	A1A1J1-31	S
18	KC1	A1A1J1-41	S
19	KC3	A1A1J1-39	S
20	KC5	A1A1J1-37	S
21	KC7	A1A1J1-35	S
22	HSWP	A3A1P1-21	S
23	LDSR	A3A10J1-46	J
24	GND		R
25	GND		R
26	GND		R
27	IOBØ	A4A10J1-3	H
28	IOB2	A4A10J1-5	H
29	IOB4	A4A10J1-7	H
30	IOB6	A4A10J1-9	H
31	IOB8	A4A10J1-11	H
32	IOB1Ø	A4A10J1-13	H
33	IOB12	A4A10J1-15	H
34	IOB14	A4A10J1-17	H
35	NC		
36	NC		
37	ADRØ	A4A10J1-23	H
38	ADR2	A4A10J1-25	H
39	ADR4	A4A10J1-27	H
40	NC		
41	KR8	A1A1J1-34	S
42	KR1Ø	A1A1J1-32	S
43	KCØ	A1A1J1-42	S
44	KC2	A1A1J1-40	S
45	KC4	A1A1J1-38	S
46	KC6	A1A1J1-36	S
47	NC		
48	LSRQ	A1A9J1-45	J
49	LBIO	A1A9J1-47	F
50	LTIO	A3A10J2-49	F

J2

PIN	SIGNAL	TO FROM	FUNCTION BLOCK
1	DIO1	J5-1	J
2	DIO2	J5-2	J
3	DIO3	J5-3	J
4	DIO4	J5-4	J
5	EOI	J5-5	J
6	DAV	J5-6	J
7	NRFD	J5-7	J
8	NDAC	J5-8	J
9	IFC	J5-9	J
10	SRQ	J5-10	J
11	ATN	J5-11	J
12	NC	SEE NOTE 5	
13	DIO5	J5-13	J
14	DIO6	J5-14	J
15	DIO7	J5-15	J
16	DIO8	J5-16	J
17	REN	J5-17	J
18	NC	SEE NOTE 5	
19	NC	SEE NOTE 5	
20	NC	SEE NOTE 5	
21	NC	SEE NOTE 5	
22	NC	SEE NOTE 5	
23	NC	SEE NOTE 5	
24	NC	SEE NOTE 5	

NOTES:

1. REFERENCE DESIGNATORS WITHIN THIS ASSEMBLY ARE ABBREVIATED. FOR COMPLETE REFERENCE DESIGNATION, PREFIX ABBREVIATION WITH ASSEMBLY DESIGNATION.
2. UNLESS OTHERWISE INDICATED: RESISTANCE IS IN OHMS (Ω) CAPACITANCE IS IN MICROFARADS (μF) INDUCTANCE IS IN MICROHENRIES (μH)
3. UNLESS OTHERWISE INDICATED: SIGNALS ENTER AT LEFT SIDE OR TOP, AND EXIT RIGHT SIDE OR BOTTOM OF FUNCTION BLOCKS.
4. PINS 12, 18-24 ARE CHASSIS GROUNDED THRU A29.
5. ON EARLIER VERSIONS OF 85660-60245, R21 IS NOT INSTALLED. REFER TO FUNCTION BLOCK F.

6. MNEMONIC TABLE:

MNEMONIC	DESCRIPTION
ADRØ	INSTRUMENT BUS ADDRESS BIT Ø
ADR1	INSTRUMENT BUS ADDRESS BIT 1
ADR2	INSTRUMENT BUS ADDRESS BIT 2
ADR3	INSTRUMENT BUS ADDRESS BIT 3
ADR4	INSTRUMENT BUS ADDRESS BIT 4
ATN	LOW=ATTENTION
DAV	LOW=DATA VALID
DIO1	HP-IB DATA INPUT/OUTPUT
DIO2	HP-IB DATA INPUT/OUTPUT
DIO3	HP-IB DATA INPUT/OUTPUT
DIO4	HP-IB DATA INPUT/OUTPUT
DIO5	HP-IB DATA INPUT/OUTPUT
DIO6	HP-IB DATA INPUT/OUTPUT
DIO7	HP-IB DATA INPUT/OUTPUT
DIO8	HP-IB DATA INPUT/OUTPUT
EOI	LOW=END OR IDENTIFY
HPON	HIGH=IF-DISPLAY SECTION POWER ON
HPUP	HIGH=POWER UP
HRAMEN	HIGH=RAM-ENABLE
IFC	LOW=INTERFACE CLEAR
IOBØ	INSTRUMENT BUS DATA BIT Ø
IOB1	INSTRUMENT BUS DATA BIT 1
IOB2	INSTRUMENT BUS DATA BIT 2
IOB3	INSTRUMENT BUS DATA BIT 3
IOB4	INSTRUMENT BUS DATA BIT 4
IOB5	INSTRUMENT BUS DATA BIT 5
IOB6	INSTRUMENT BUS DATA BIT 6
IOB7	INSTRUMENT BUS DATA BIT 7
IOB8	INSTRUMENT BUS DATA BIT 8
IOB9	INSTRUMENT BUS DATA BIT 9
IOB1Ø	INSTRUMENT BUS DATA BIT 1Ø
IOB11	INSTRUMENT BUS DATA BIT 11
IOB12	INSTRUMENT BUS DATA BIT 12
IOB13	INSTRUMENT BUS DATA BIT 13
IOB14	INSTRUMENT BUS DATA BIT 14
IOB15	INSTRUMENT BUS DATA BIT 15
LADR	LOW=ADDRESS LED ON
LBIO	LOW=BOTTOM BOX INPUT/OUTPUT
LDSR	LOW=DIGITAL STORAGE READY
LIPS	LOW=INSTRUMENT PRESET
LRMT	LOW=REMOTE;HIGH=LOCAL
LRTL	LOW=RETURN TO LOCAL
LSRQ	LOW=SERVICE REQUEST
LTIO	LOW=TOP BOX INPUT/OUTPUT
NDAC	HIGH=DATA ACCEPTED
NRFD	HIGH=READY FOR DATA
REN	LOW=REMOTE ENABLE
SRQ	LOW=SERVICE REQUEST

A15 CONTROLLER
85660-60245 (SHEET 2 OF 3)
(SERIAL PREFIX: 2503A)

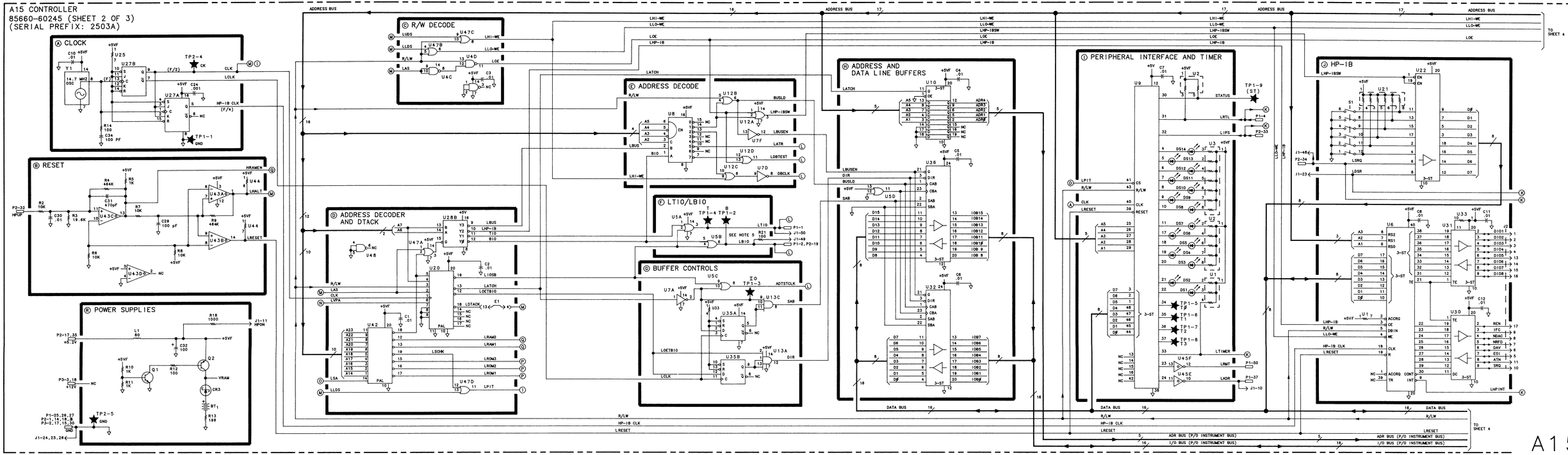

A15

A15 CONTROLLER, SCHEMATIC DIAGRAM (2 OF 3)

A15 CONTROLLER
85660-60245 (SHEET 3 OF 3)
(SERIAL PREFIX: 2503A)

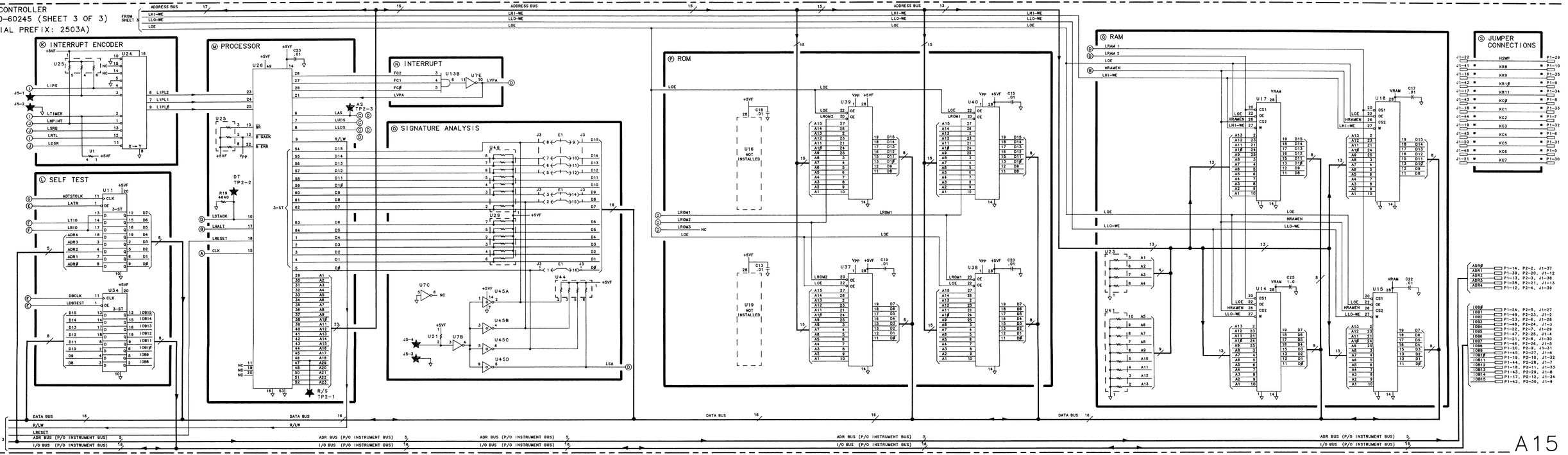

A15

A15 CONTROLLER, SCHEMATIC DIAGRAM (3 OF 3)

A16

A16 Scan Generator, Circuit Description

The Al6 Scan Generator provides tuning voltage ramps to the IF-Display Section (SCAN OUT and AUX OUT) and scaled ramps to the A10A8 PLL2 Discriminator and A19 DAC.

The SCAN OUT ramp to the IF-Display Section is used for the horizontal sweep signal for the CRT display update, and the AUX OUT ramp is used by the A4A1 Video Processor to maintain video information in proper correlation with the horizontal sweep and frequency tuning.

The scaled ramp to the A10A8 PLL2 Discriminator is used to scale the tuning current ramp (VCO TUNE) used to tune the VCO on the A10A5 PLL2 VCO.

Scan Time Register Ⓑ and Sweep Time DAC Ⓓ

Scan time information is placed in the scan time registers U26, U27, and U29. This information comes from the front panel via the Instrument Bus. Processing of this information is done on the Al2 Front-Panel Interface and Al5 Controller. The information is clocked into the Scan Time Register by control signal LSTS (Low = Scan Time Strobe). This control signal becomes active (low) whenever the selected scan time is changed. A positive dc voltage is developed by U8 corresponding to the programmed sweep time information applied to the DAC U28. This voltage is between +0.7 V and +7.0 V.

Ramp Generator Ⓔ

The dc voltage level provided by U8 causes a constant current to flow through the proper scaling resistor, through Virtual Ground and Q5 to the Ramp Capacitor Cl. The scaling resistor is selected by the programmed sweep information from the front panel the same as is the sweep time. This information turns on one of the switch drivers U20A through U20D, which turns on one and only one of the scaling resistor switches Q1, Q2, Q3, or Q4, to place the proper scaling resistors in the charging current path for Cl. If the selected sweep time is slower than 200 seconds, none of the scaling resistors are switched in. For 0.0 to 2.5 GHz frequency span, the waveform on Ramp Capacitor Cl is a positive going ramp from -5.0 Vdc to -2.0 Vdc with a 3 ms reset time. Ramp Buffer U3 amplifies and shifts the level of the ramp so that the SCAN OUT is a 0.0 to +10.0 V dc ramp.

Ramp Control Logic Ⓒ, Switch Driver Ⓝ, Ramp Reset Switch Ⓜ, and Ramp Reset Amplifier Ⓙ

The sweep ramp is formed by alternately charging and discharging Cl, according to the following cycle.

Control line HSWP resets the sweep (High = Sweeping). When HSWP goes low (determined by IF-Display Section), LHOLD (U5C pin 8) goes low, turning on CR1. When CR1 is on, charging current bypasses ramping capacitor Cl and instead passes to ground via CR1. Ramping capacitor Cl stops charging.

Ramping capacitor Cl holds its charge until LANR, from Front-Panel Interface Assembly A12, goes low (Low = Analog Reset). When LANR goes low, LHOLD goes high, turning CR1 off, removing the current bypass for ramping capacitor Cl. RESET/GO (U5D pin 11) also goes high when LANR goes low, which turns Q9 off. Q7 and Q6 then turn on, providing a discharge path for Cl through Ramp Reset Amplifier U2. Test point 3 remains at ground potential until HSWP again goes high, starting the cycle again.

Frequency Span Register Ⓘ and Span Width DAC Ⓛ

The Span Width DACs U17 and U10 provide a negative scan ramp to be scaled by the Integer Number Attenuator. The output of this negative-going ramp is between 0 and -10 V. The amplitude of the ramp is dependent on the span of the instrument. Frequency span information arrives on the Instrument Bus and is stored in registers U1 and U18. This information is clocked into Frequency Span registers U16 and U18 whenever control line LSAS (Low = Scan Attenuator Strobe) goes low.

Integer Number Attenuator Ⓞ, Band Decoder Ⓟ, Switch Drivers Ⓠ

The Integer Number Attenuator scales the negative ramp at TP5 to the harmonic band being swept. This division is by 1/2 for Band C, 1/3 for Band D, and 1/4 for Band E. In Band B, the ramp is not scaled so it remains unchanged.

The division is performed by R48 through R50. If in Band B, only R80 is in the circuit. In Band C, R81 is added. In Band D, R82 is added. In Band E, R83 is added. These resistors are switched in by transistors Q15, Q13, and Q14, which are driven by drivers U19A, U19C, and U10B respectively. The information necessary to determine when and which resistors to switch in comes form the Al2 Front-Panel Interface (SAT 1 and SAT 2) and is decided by Band Decoder P.

Aux Out Register Ⓕ, Aux Out Offset DAC Ⓖ, and Aux Out Amplifier Ⓗ

The AUX OUT signal is a positive-going ramp voltage from the scan generator which is amplified by U9B. This output is always 0 to +10 V regardless of the selected frequency span.

If more than one harmonic band is swept, there is a small ramp output from the ramp generator E (TP3) for each band with each ramp resetting to 0 V. To combine these ramps, Aux Out Offset DAC U22 and U9A provide a voltage to hold the Aux Out Amplifier input at a dc level at the end of each ramp. The output therefore is a continuous ramp voltage from 0 to +10 V. This voltage is programmed into the DAC U22 by the span information from the Instrument Bus. This information is stored in Aux Out Register U23 and U21, being clocked in by control line LAOS (Low = Aux Out Strobe). This control line is from the Al2

Front-Panel Interface and is enabled (pulled low) whenever front-panel key selections indicate that more than one harmonic board is being swept.

Voltage Reference Ⓐ

Voltage Reference U7 and associated circuitry provide a stable -7 V dc reference voltage for both the Sweep Time and Aux Out Offset DACs.

Scan Test Circuit Ⓚ

The control signal HSWP (High = Sweeping) is normally pulled low indicating the end of a sweep by the A3A1 Trigger in the IF-Display Section. This signal can also be pulled low by the Scan Test Circuit for the purpose of testing the scan circuitry.

If the scan ramp should exceed +11 V, this overvoltage is detected by U11D which triggers one-shot multivibrator U6. U6 generates a 50 ms pulse on the HSWP line. When this pulse goes low, the Al5 Controller "thinks" that the sweep has ended and performs its update functions. When the pulse goes high again (after 50 ms), the Al5 Controller "thinks" a new sweep has begun. This enables the sweep circuitry to function without the IF-Display Section, or when a circuit malfunction exists, thus aiding troubleshooting.

Scan Reset Amplifier Ⓢ

The Scan Reset Amplifier supplies negative feedback that holds SCAN OUT (Q12 emitter) at ground potential during retrace.

For Scan Generator (HP part number 85660-60198): Fixed-gain amplifier U13 amplifies any potential at its noninverting input, pin 3. During retrace, LSAMPLE is low, and sample-and-hold device U14 tracks the U13 output, charging C20.

This error voltage at C20 is divided by R64, R65, and R66, and is summed with the Span Width DAC output at U12 pin 2. The amplified and inverted output of U12 cancels the potential at SCAN OUT that produced the error voltage across C20.

When the sweep commences, HSWP and LSAMPLE are high. The input to U14 is held on C20 for the duration of the sweep.

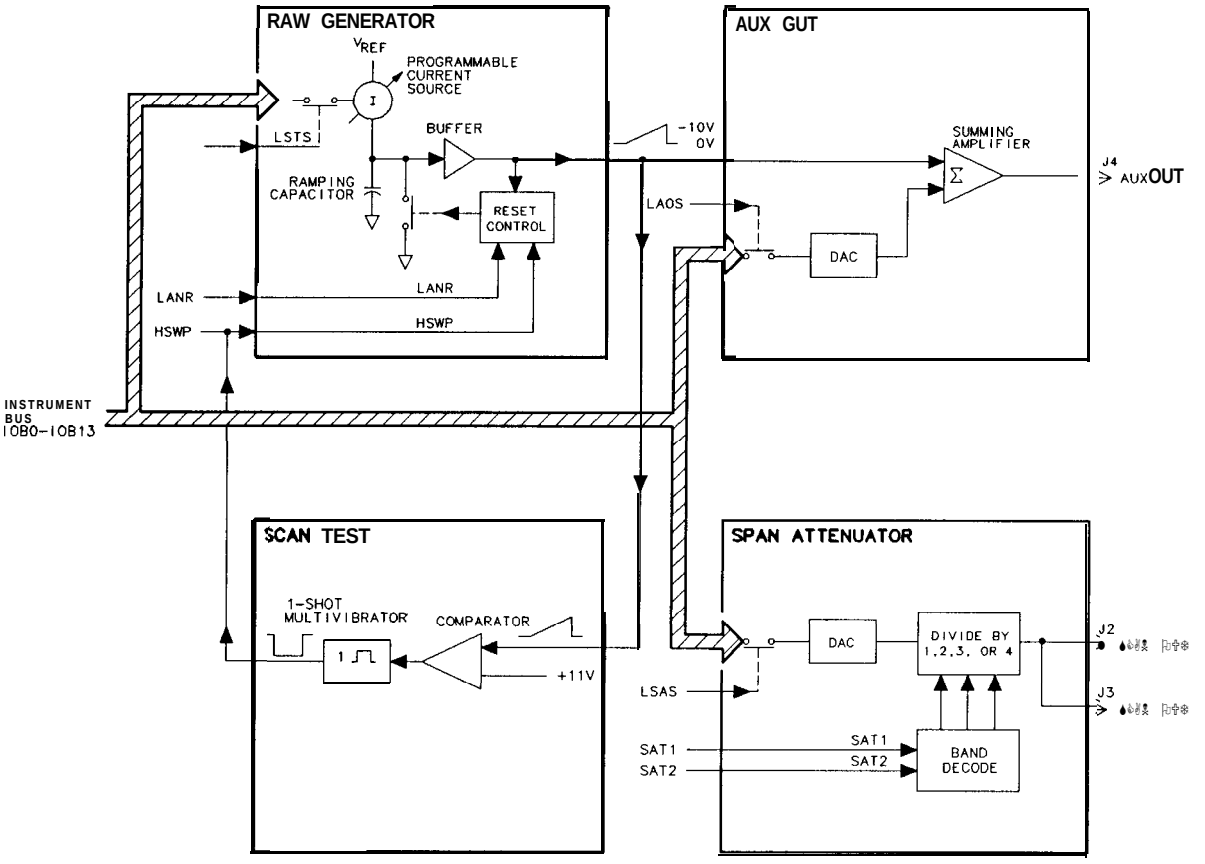

Figure 1. Al6 Scan Generator, Simplified Block Diagram

HP Part Number 85660-60198

Al 6 Scan Generator

Reference Designation	HP Part Number	c-	Qty	Description	Mfr Code	Mfr Part Number
A16	85660-60198		1	BOARD ASSEMBLY, SCAN GENERATOR (SERIAL PREFIXES: 2410A-2430A)	28480	85660-60198
A16C1	0160-5609		1	CAPACITOR-FXD 10UF +-10% 50VDC MET-POL	84411	HEW-687
A16C2	0160-2208	4	1	CAPACITOR-FXD 330PF +-5% 300VDC MICA C	09023	CD15FD331J03
A16C3	0160-4892	6	1	CAPACITOR-FXD 1UF +-20% 25VDC CER	56289	2C37Z5U105M025C
A16C4	0180-0116	1	1	CAPACITOR-FXD 6.8UF+-10% 35VDC TA	56289	150D685X9035B2
A16C5	0180-0228	6	1	CAPACITOR-FXD 22UF+-10% 15VDC TA	56289	1500226X901582
A16C6	0180-0229	7	1	CAP-FXD 33uF 10 V TA	56289	150D336X9010B2
A16C7	0160-4005	3	1	CAPACITOR-FXD 1UF +-20% 100VDC CER	04222	SR401E105MAAH
A16C8	0160-4892	6	1	CAPACITOR-FXD 1UF +-20% 25VDC CER	56289	2C37Z5U105M025C
A16C9	0160-4892	6	1	CAPACITOR-FXD 1UF +-20% 25VDC CER	56289	2C37Z5U105M025C
A16C10	0160-4892	6	1	CAPACITOR-FXD 1UF +-20% 25VDC CER	56289	2C37Z5U105M025C
A16C11	0160-4892	6	1	CAPACITOR-FXD 1UF +-20% 25VDC CER	56289	2C37Z5U105M025C
A16C12	0160-4005	3	1	CAPACITOR-FXD 1UF +-20% 100VDC CER	04222	SR401E105MAAH
A16C13	0160-4892	6	1	CAPACITOR-FXD 1UF +-20% 25VDC CER	56289	2C37Z5U105M025C
A16C14	0160-4892	6	1	CAPACITOR-FXD 1UF +-20% 25VDC CER	56289	2C37Z5U105M025C
A16C15	3160-4005	3	1	CAPACITOR-FXD 1UF +-20% 100VDC CER	04222	SR401E105MAAH
A16C16	0160-4892	6	1	CAPACITOR-FXD 1UF +-20% 25VDC CER	56289	2C37Z5U105M025C
A16C17	0160-4892	6	1	CAPACITOR-FXD 1UF +-20% 25VDC CER	56289	2C37Z5U105M025C
A16C18	0160-4005		1	CAPACITOR-FXD 1UF +-20% 100VDC CER	04222	SR401E105MAAH
A16C19	0160-4892	6	1	CAPACITOR-FXD 1UF +-20% 25VDC CER	56289	2C37Z5U105M025C
A16C20	0160-3787	6	1	CAPACITOR-FXD 1UF +-10% 50VDC MET-POL	84411	HEW-249
A16C21	0160-4892	6	1	CAPACITOR-FXD 1UF +-20% 25VDC CER	56289	2C37Z5U105M025C
A16C22	0160-4892	6	1	CAPACITOR-FXD 1UF +-20% 25VDC CER	56289	2C37Z5U105M025C
A16C23	0160-3447		1	CAP-FXD 470pF 1 kV		808(1KV) X5E 471K
A16C25	0160-4892	6	1	CAPACITOR-FXD 1UF +-20% 25VDC CER	56289	2C37Z5U105M025C
A16C26	0180-1743	2	1	CAPACITOR-FXD 0.1UF+-10% 35VDC TA	56289	150D104X9035A2-DYS
A16C27	0160-3448	6	1	CAP-FXD 1000pF 1 kV		808-548 X5E 102K
A16C28	0160-3448	6	1	CAP-FXD 1000pF 1 kV		808-548 X5E 102K
A16C29	0160-4005	3	1	CAPACITOR-FXD 1UF +-20% 100VDC CER	04222	SR401E105MAAH
A16C30	0160-4005	3	1	CAPACITOR-FXD 1UF +-20% 100VDC CER	04222	SR401E105MAAH
A16C31	0160-4005	3	1	CAPACITOR-FXD 1UF +-20% 100VDC CER	04222	SR401E105MAAH
A16C32	0160-4005	3	1	CAPACITOR-FXD 1UF +-20% 100VDC CER	04222	SR401E105MAAH
A16C33	0160-4005	3	1	CAPACITOR-FXD 1UF +-20% 100VDC CER	04222	SR401E105MAAH
A16C34	0160-4005	3	1	CAPACITOR-FXD 1UF +-20% 100VDC CER	04222	SR401E105MAAH
A16C35	0160-4892	3	1	CAPACITOR-FXD 1UF +-20% 25VDC CER	56289	2C37Z5U105M025C
A16C36	0160-4005	3	1	CAPACITOR-FXD 1UF +-20% 100VDC CER	04222	SR401E105MAAH
A16C37	0160-4892	6	1	CAPACITOR-FXD 1UF +-20% 25VDC CER	56289	2C37Z54105M025C
A16C38	0160-4892	6	1	CAPACITOR-FXD 1UF +-20% 25VDC CER	56289	2C37Z5U105M025C
A16C39	0160-4835	7	1	CAPACITOR-FXD .1UF +-10% 50VDC CER	04222	SA115C104KAAH
A16C40	0160-4832	4	1	CAPACITOR-FXD .01UF +-10% 100VDC CER	04222	SA101C103KAAH
A16CR1	1901-0539	3	1	DIODE-SCHDTTKY SM SIG	28480	1901-0539
A16CR2	1901-0539	3	1	DIODE-SCHOTTKY SM SIG	28480	1901-0539
A16CR3	1901-0539	3	1	DIODE-SCHDTTKY SM SIG	28480	1901-0539
A16CR4	1901-0539	3	1	DIODE-SCHOTTKY SM SIG	28480	1901-0539
A16CR5	1901-0376	6	1	DIODE-GEN PRP 35V 50MA DO-35	9N171	1N3595
A16CR6	1901-0040	1	1	DIODE-SWITCHING 30V 50MA 2NS DO-35	71468	

**Indicates factory-selected value*

HP Part Number 85660-60198

Al6 Scan Generator

Reference Designation	HP Part Number	CD	Qty	Description	Mfr Code	Mfr Part Number
A16J1	1250-0543	8	1	CONNECTOR-RF SM-SNP M PC 50-OHM	98291	51-053-0349-BE8
A16J2	1250-0543	8	1	CONNECTOR-RF SM-SNP M PC 50-OHM	98291	51-053-0349-BE8
A16J3	1250-0543	8	1	CONNECTOR-RF SM-SNP M PC 50-OHM	98291	51-053-0349-BE8
A16J4	1250-0543	8	1	CONNECTOR-RF SM-SNP M PC 50-OHM	98291	51-053-0349-BE8
A16MP3	1251-2194	1	2	CONNECTOR-SGL CONT SKT .021-IN-BSC-SZ	00779	3-331272-O
A16MP4	1480-0073	1	2	PIN-ROLL .062-IN-DIA .25-IN-LG	72962	99-012-062-0250
A16MP6	4040-0749	4	1	EXTR PC BD BRN	28480	4040-0749
A16MP7	4040-0754	1	1	EXTR PC BD BLU	28480	4040-0754
A16MP9	2200-0143	C	2	SCREW-MACH 4-40 .375-IN-LG PAN-HD POZI	77250	
A16MP10	2190-0003	8	2	WASHER LOCK, HLCL NO.4 .115-IN-ID	80120	
A16MP11	0380-1194	1	2	STANDOFF-RND .594-IN-LG 4-40THD	00000	ORDER BY DESCRIPTION
A16Q1	1855-0020	8	1	TRANSISTOR J-FET N-CHAN D-MODE TO-18 SI	04713	SFE793
A16Q2	1855-0020	8	1	TRANSISTOR J-FET N-CHAN D-MODE TO-18 SI	04713	SFE793
A16Q3	1855-0020	8	1	TRANSISTOR J-FET N-CHAN D-MODE TO-18 SI	04713	SFE793
A16Q4	1855-0020	8	1	TRANSISTOR J-FET N-CHAN D-MODE TO-18 SI	04713	SFE793
A16Q5	1855-0082	2	1	TRANSISTOR J-FET P-CHAN D-MODE SI	04713	
A16Q6	1855-0082	2	1	TRANSISTOR J-FET P-CHAN D-MODE SI	04713	
A16Q7	1855-0082	2	1	TRANSISTOR J-FET P-CHAN D-MODE SI	04713	
A16Q8	1854-0404	C	1	TRANSISTOR NPN SI TO-18 PD=360MW	04713	
A16Q9	1853-0281	9	1	TRANSISTOR PNP 2N2907A SI TO-18 PD=400MW	04713	2N2907A
A16Q10	1854-0557	4	1	TRANSISTOR NPN 2N2432A SI TO-18 PD=300MW	01295	2N2432A
A16Q11	1854-0557	4	1	TRANSISTOR NPN 2N2432A SI TO-18 PD=300MW	01295	2N2432A
A16Q12	1854-0637	1	1	TRANSISTOR NPN 2N2219A SI TO-5 PD=800MW	04713	2N2219A
A16Q13	1853-0322	9	1	TRANSISTOR PNP 2N2946A SI TO-46 PD=400MW	04713	
A16Q14	1853-0322	9	1	TRANSISTOR PNP 2N2946A SI TO-46 PD=400MW	04713	
A16Q15	1853-0322	9	1	TRANSISTOR PNP 2N2946A SI TO-46 PD=400MW	04713	
A16R1	0757-0464	5	1	RESISTOR 90.9K +-1% .125W TF TC=O+-100	19701	SFR25H
A16R2	3683-2265	1	1	RESISTOR 22M 5% .25W CC TC=-900/+1200	01121	CB2265
A16R4	0757-0465	6	1	RESISTOR 100K +-1% .125W TF TC=O+-100	19701	SFR25H
A16R5	0757-0470	3	1	RESISTOR 162K +-1% .125W TF TC=O+-100	19701	SFR25H
A16R6	3698-8827	4	1	RESISTOR 1M +-1% .125W TF TC=O+-100	19701	SFR25H
A16R7	3698-3450	9	1	RESISTOR 42.2K 1% .125W TF TC=O+-100	19701	SFR25H
A16R8	3698-3459	8	1	RESISTOR 383K 1% .125W TF TC=O+-100	19701	SFR25H
A16R9	3698-3153	9	1	RESISTOR 3.83K 1% .125W TF TC=O+-100	19701	SFR25H
A16R10	3698-3161	9	1	RESISTOR 38.3K 1% .125W TF TC=O+-100	19701	SFR25H
A16R11	3698-3446	3	1	RESISTOR 383 1% .125W TF TC=O+-100	19701	SFR25H
A16R12	3698-3153	9	1	RESISTOR 3.83K 1% .125W TF TC=O+-100	19701	SFR25H
A16R13	0757-0416	7	1	RESISTOR 511 +-1% .125W TF TC=O+-100	19701	SFR25H
A16R18	0757-0442	9	1	RESISTOR 10K +-1% .125W TF TC=O+-100	19701	SFR25H
A16R19	0757-0438	3	1	RESISTOR 5.11K +-1% .125W TF TC=O+-100	19701	SFR25H
A16R20	0757-0280	3	1	RESISTOR 1K +-1% .125W TF TC=O+-100	19701	SFR25H
A16R21	0757-0442	9	1	RESISTOR 10K +-1% .125W TF TC=O+-100	19701	SFR25H
A16R22	1757-0199	3	1	RESISTOR 21.5K +-1% .125W TF TC=O+-100	19701	SFR25H
A16R23	0757-0459	8	1	RESISTOR 56.2K +-1% .125W TF TC=O+-100	19701	SFR25H
A16R24	3698-3136	8	1	RESISTOR 17.8K 1% .125W TF TC=O+-100	19701	SFR25H
A16R25	1757-0289	2	1	RESISTOR 13.3K +-1% .125W TF TC=O+-100	19701	SFR25H
A16R27	1698-0084	9	1	RESISTOR 2.15K 1% .125W TF TC=O+-100	19701	SFR25H
A16R28	0698-3161	9	1	RESISTOR 38.3K 1% .125W TF TC=O+-100	19701	SFR25H

**Indicates factory-selected value*

HP Part Number 85660-60198

Al 6 Scan Generator

Reference Designation	HP Part Number	CD	Qty	Description	Mfr Code	Mfr Part Number
A16R30	0698-3160	8	1	RESISTOR 31.6K 1% .125W TF TC=O+-100	19701	SFR25H
A16R31	0757-0289	2	1	RESISTOR 13.3K +-1% .125W TF TC=O+-100	19701	SFR25H
A16R32	0757-1094	9	1	RESISTOR 1.47K +-1% .125W TF TC=O+-100	19701	SFR25H
A16R33	0757-0439	4	1	RESISTOR 6.81K +-1% .125W TF TC=O+-100	19701	SFR25H
A16R34	0757-0442	9	1	RESISTOR 10K +-1% .125W TF TC=O+-100	19701	SFR25H
A16R35	0698-3154	0	1	RESISTOR 4.22K 1% .125W TF TC=O+-100	19701	SFR25H
A16R38	0698-3157	3	1	RESISTOR 19.6K 1% .125W TF TC=O+-100	19701	SFR25H
A16R39	0698-3158	4	1	RESISTOR 23.7K 1% .125W TF TC=O+-100	19701	SFR25H
A16R40	0757-0442	9	1	RESISTOR 10K +-1% .125W TF TC=O+-100	19701	SFR25H
A16R41	0698-3153	9	1	RESISTOR 3.83K 1% .125W TF TC=O+-100	19701	SFR25H
A16R44	0699-0307	1	1	RESISTOR 36.75K +-0.1% .1W TF TC=O+-10	19701	50232
A16R45	0757-0442	9	1	RESISTOR 10K +-1% .125W TF TC=O+-100	19701	SFR25H
A16R46*	0699-0380	0	1	RESISTOR 73.8741K .025% .1W F TC=O+-5	28480	0699-0380
A16R48	0757-0442	9	1	RESISTOR 10K +-1% .125W TF TC=O+-100	19701	SFR25H
A16R49	0757-0442	9	1	RESISTOR 10K +-1% .125W TF TC=O+-100	19701	SFR25H
A16R50	0757-0442	9	1	RESISTOR 10K +-1% .125W TF TC=O+-100	19701	SFR25H
A16R53	0698-3136	8	1	RESISTOR 17.8K 1% .125W TF TC=O+-100	19701	SFR25H
Al6R54	0757-0440	7	1	RESISTOR 7.5K +-1% .125W TF TC=O+-100	19701	SFR25H
A16R55	0757-0459	8	1	RESISTOR 56.2K +-1% .125W TF TC=O+-100	19701	SFR25H
A16R56	0757-0442	9	1	RESISTOR 10K +-1% .125W TF TC=O+-100	19701	SFR25H
A16R57	0698-3443	0	1	RESISTOR 287 1% .125W TF TC=O+-100	19701	SFR25H
A16R58	0757-0280	3	1	RESISTOR 1K +-1% .125W TF TC=O+-100	19701	SFR25H
A16R59	0757-0280	3	1	RESISTOR 1K +-1% .125W TF TC=O+-100	19701	SFR25H
A16R60	0757-0280	3	1	RESISTOR 1K +-1% .125W TF TC=O+-100	19701	SFR25H
A16R61	0757-0440	7		RESISTOR 7.5K 1% .125W F TC=O+-100	24546	C4-1/8-TO-7501-F
A16R62	2100-1760	7	2	RESISTOR-TRMR 5K 5% WW SIDE-ADJ l-TRN	28480	2100-1760
A16R63	0757-0440	7		RESISTOR 7.5K 1% .125W F TC=O+-100	24546	C4-1/8-TO-7501-F
A16R64	0757-0199	3		RESISTOR 21.5K 1% .125W F TC=O+-100	24546	C4-1/8-TO-7501-F
A16R65	0757-0416	7		RESISTOR 511K 1% .125W F TC=O+-100	24546	C4-1/8-TO-511R-F
A16R66	0698-8827	4		RESISTOR 1M 1% .125W F TC=O+-100	24546	0698-8827
A16R67	2100-1760	7	1	RESISTOR-TRMR 5K 5% WW SIDE-ADJ l-TRN		CT-106-4-5K
A16R68	2100-1759	4	1	RESISTOR-TRMR 2K 5% WW SIDE-ADJ l-TRN		CT-106-4-2K
A16R70	0698-3158	4	1	RESISTOR 23.7K 1% .125W TF TC=O+-100	19701	SFR25H
A16R71	2100-1759	4	1	RESISTOR-TRMR 2K 5% WW SIDE-ADJ l-TRN		CT-106-4-2K
A16R72	2100-1759	4	1	RESISTOR-TRMR 2K 5% WW SIDE-ADJ l-TRN		CT-106-4-2K
A16R73	0698-3136	8	1	RESISTOR 17.8K 1% .125W TF TC=O+-100	19701	SFR25H
A16R80	0699-0308	2	1	RESISTOR 24.97K +-0.025% .1W TF TC=O+-5	19701	50232
A16R81	0699-0308	2	1	RESISTOR 24.97K +-0.025% .1W TF TC=O+-5	19701	50232
A16R82	0699-0308	2	1	RESISTOR 24.97K +-0.025% .1W TF TC=O+-5	19701	50232
A16R83	0699-0308	2	1	RESISTOR 24.97K +-0.025% .1W TF TC=O+-5	19701	50232
A16R84	0757-0440	7	1	RESISTOR 7.5K +-1% .125W TF TC=O+-100	19701	SFR25H
A16R86	0757-0346	2	1	RESISTOR 10 +-1% .125W TF TC=O+-100	91637	CMF-55-1, T-l
A16R90	0698-3136	8	1	RESISTOR 17.8K 1% .125W TF TC=O+-100	19701	SFR25H
A16R91	0757-0199	3	1	RESISTOR 21.5K +-1% .125W TF TC=O+-100	19701	SFR25H
A16R92	0757-0442	9	1	RESISTOR 10K +-1% .125W TF TC=O+-100	19701	SFR25H
A16R93	0698-0084	9	1	RESISTOR 2.15K 1% .125W TF TC=O+-100	19701	SFR25H
A16R94	0698-3162	0	1	RESISTOR 46.4K 1% .125W TF TC=O+-100	19701	SFR25H

**Indicates facto y-selected value*

HP Part Number 85660-60198

Al6 Scan Generator

Reference Designation	HP Part Number	CD	Qty	Description	Mfr Code	Mfr Part Number
A16R95	0757-0442	9	1	RESISTOR 10K +-1% .125W TF TC=D+-100	19701	SFR25H
A16R96	0757-0424	7	1	RESISTOR 1.1K +-1% .125W TF TC=O+-100	19701	SFR25H
A16R97	0757-0405	4	1	RESISTOR 162 +-1% .125W TF TC=O+-100	19701	SFR25H
A16R98	0757-0278	9	1	RESISTOR 1.78K +-1% .125W TF TC=O+-100	19701	SFR25H
A16TP1	1251-0600	0	1	CONNECTOR-SGL CONT PIN 1.14-MM-BSC-SZ SQ	27264	16-06-0034
A16TP2	1251-0600	0	1	CONNECTOR-SGL CONT PIN 1.14-MM-BSC-SZ SQ	27264	16-06-0034
A16TP3	1251-0600	0	1	CONNECTOR-SGL CONT PIN 1.14-MM-BSC-SZ SQ	27264	16-06-0034
A16TP4	1251-0600	0	1	CONNECTOR-SGL CONT PIN 1.14-MM-BSC-SZ SQ	27264	16-06-0034
A16TP5	1251-0600	0	1	CONNECTOR-SGL CONT PIN 1.14-MM-BSC-SZ SQ	27264	16-06-0034
A16TP6	1251-0600	0	1	CONNECTOR-SGL CONT PIN 1.14-MM-BSC-SZ SQ	27264	16-06-0034
A16TP7	1251-0600	0	1	CONNECTOR-SGL CONT PIN 1.14-MM-BSC-SZ SQ	27264	16-06-0034
A16TP8	1251-0600	0	1	CONNECTOR-SGL CONT PIN 1.14-MM-BSC-SZ SQ	27264	16-06-0034
A16TP9	1251-0600	0	1	CONNECTOR-SGL CONT PIN 1.14-MM-BSC-SZ SQ	27264	16-06-0034
A16U1	1826-0601	0	1	IC OP AMP PRCN TO-99 PKG	06665	OP-16FJ
A16U2	1826-0471	2	1	IC OP AMP LOW-DRIFT TO-99 PKG	06665	DP-07CJ SELECTED
A16U3	1826-0601	0	1	IC OP AMP PRCN TO-99 PKG	06665	OP-16FJ
A16U4	1826-0306	2	1	IC COMPARATOR GP QUAD 14-DIP-C PKG	27014	LM339AJ
A16U5	1820-1425	6	1	IC SCHMITT-TRIG TTL LS NAND QUAD 2-INP	01295	SN74LS132N
A16U6	1826-0180	0	1	IC TIMER TTL MONO/ASTBL	18324	NE555N
A16U7	1826-1058	3	1	IC OP AMP GP 8-TO-99 PKG	06665	DP-02CJ
A16U8	1826-1058	3	1	IC OP AMP GP 8-TO-99 PKG	06665	OP-02CJ
A16U9	1826-0092	3	1	IC OP AMP GP DUAL TO-99 PKG	04713	
A16U10	1826-0229	8	1	IC OP AMP LOW-DRIFT TO-99 PKG	06665	OP-05CJ
A16U11	1826-0161	7	1	IC OP AMP GP QUAD 14-DIP-P PKG	27014	LM324N
A16U12	1826-0229	8	1	IC OP AMP LOW-DRIFT TO-99 PKG	06665	OP-05CJ
A16U13	1826-0471	2		IC OP AMP LOW-DRIFT TO -99 PKG	28480	1826-0471
A16U14	1826-0840	9	1	SAMPLE AND HOLD 14 -CERDIP	34371	HA1-2425-5
A16U15	1810-0206	8	1	NETWORK-RES 8-SIP 10.0K OHM X 7	11236	750-81
A16U16	1820-1196	8	1	IC FF TTL LS D-TYPE POS-EDGE-TRIG COM CL	01295	SN74LS174N
A16U17	1826-0684	9	1	D/A 12-BIT 18-CBRZ/SDR CMOS	24355	AD7541BD(SEL)
A16U18	1820-1196	8	1	IC FF TTL LS D-TYPE POS-EDGE-TRIG COM CL	01295	SN74LS174N
A16U19	1826-0161	7	1	IC OP AMP GP QUAD 14-DIP-P PKG	27014	LM324N
A16U20	1826-0306	2	1	IC COMPARATOR GP QUAD 14-DIP-C PKG	27014	LM339AJ
A16U21	1820-1196	8	1	IC FF TTL LS D-TYPE POS-EDGE-TRIG CDM CL	01295	SN74LS174N
A16U22	1826-0541	7	1	D/A 10-BIT 16-PLASTIC CMOS	24355	AD7520JN(SEL)
A16U22	1826-0448	3	0	ALTERNATE FOR 1826-0541	24355	AD7533LN(SEL)
A16U23	1820-1196	8	1	IC FF TTL LS D-TYPE PDS-EDGE-TRIG CDM CL	01295	SN74LS174N
A16U24	1820-1197	9	1	IC GATE TTL LS NAND QUAD 2-INP	01295	SN74LS00N
A16U25	1820-1197	9	1	IC GATE TTL LS NAND QUAD 2-INP	01295	SN74LS00N
A16U26	1820-1195	7	1	IC FF TTL LS D-TYPE POS-EDGE-TRIG COM CL	01295	SN74LS175N
A16U27	1820-1196	8	1	IC FF TTL LS D-TYPE POS-EDGE-TRIG CDM CL	01295	SN74LS174N
A16U28	1826-0541	7		IC CDNV 10-B-D/A 16-DIP-P PKG	28480	1826-0541
A16U28	1826-0448	3	0	ALTERNATE FOR 1826-0541	24355	AD7533LN(SEL)
A16U29	1820-1196	8	1	IC FF TTL LS D-TYPE POS-EDGE-TRIG CDM CL	01295	SN74LS174N
A16VR1	1902-3203	6	1	DIODE-ZNR 14.7V 5% DO-35 PD=.4W	04713	
A16VR2	1902-3203	6	1	DIODE-ZNR 14.7V 5% DO-35 PD=.4W	04713	
A16VR3	1902-0625	0	1	DIODE-ZNR 1N829 6.2V 5% DO-35 PD=.25W TC	04713	1N829
A16W1	1460-1489	8	1	WIREFORM BE CU AG	17450	

**Indicates factory-selected value*

HP Part Number 85660-60247

Al 6 Scan Generator

Reference Designation	HP Part Number	CD	Qty	Description	Mfr Code	Mfr Part Number
A16	85660-60247	5	1	BOARD ASSEMBLY SCAN GENERATOR (SERIAL PREFIX: 2449A)	28480	85660-60247
A16C1	0160-5609	5	1	CAPACITOR-FXD 10UF +-10% 50VDC MET-POLYC	84411	HEW-687
A16C2	0160-2208	4	1	CAPACITOR-FXD 330PF +-5% 300VDC MICA 0+7	09023	CD15FD331J03
A16C3	0160-4892	6	1	CAP-FXD 1uF 25 V	56289	2C37Z5U105M025C
A16C4	0180-0116	1	1	CAPACITOR-FXD 6.8UF+-10% 35VDC TA	56289	150D685X9035B2-DYS
A16C5	0180-0228	6	1	CAPACITOR-FXD 22UF+-10% 15VDC TA	56289	150D226X9015B2-DYS
A16C6	0180-0229	7	1	CAP-FXD 33uF 10 V TA	56289	150D336X9010B2-DYS
A16C7	0160-4005	3	1	CAPACITOR-FXD 1UF +-20% 100VDC CER	04222	SR401E105MAAH
A16C8	0160-4892	6	1	CAP-FXD 1uF 25 V	56289	2C37Z5U105M025C
A16C9	0160-4892	6	1	CAP-FXD 1uF 25 V	56289	2C37Z5U105M025C
A16C10	0160-4892	6	1	CAP-FXD 1uF 25 V	56289	2C37Z5U105M025C
A16C11	0160-4892	6	1	CAP-FXD 1uF 25 V	56289	2C37Z5U105M025C
A16C12	0160-4005	3	1	CAPACITOR-FXD 1UF +-20% 100VDC CER	04222	SR401E105MAAH
A16C13	0160-4892	6	1	CAP-FXD 1uF 25 V	56289	2C37Z5U105M025C
A16C14	0160-4892	6	1	CAP-FXD 1uF 25 V	56289	2C37Z5U105M025C
A16C15	0160-4005	3	1	CAPACITOR-FXD 1UF +-20% 100VDC CER	04222	SR401E105MAAH
A16C16	0160-4892	6	1	CAP-FXD 1uF 25 V	56289	2C37Z5U105M025C
A16C17	0160-4892	6	1	CAP-FXD 1uF 25 V	56289	2C37Z5U105M025C
A16C18	0160-4005	3	1	CAPACITOR-FXD 1UF +-20% 100VDC CER	04222	SR401E105MAAH
A16C19	0160-4892	6	1	CAP-FXD 1uF 25 V	56289	2C37Z5U105M025C
A16C20	0160-3787	6	1	CAPACITOR-FXD 1UF +-10% 50VDC MET-POLYC	84411	HEW-249
A16C21	0160-4892	6	1	CAP-FXD 1uF 25 V	56289	2C37Z5U105M025C
A16C22	0160-4892	6	1	CAP-FXD 1uF 25 V	56289	2C37Z5U105M025C
A16C23	0160-3447	5	1	CAP-FXD 470pF 1 kV		808(1KV) X5E 471K
A16C25	0160-4892	6	1	CAP-FXD 1uF 25 V	56289	2C37Z5U105M025C
A16C26	0180-1743	2	1	CAPACITOR-FXD .1UF+-10% 35VDC TA	56289	150D104X9035A2-DYS
A16C27	0160-3448	6	1	CAP-FXD 1000pF 1 kV		808-548 X5E 102K
A16C28	0160-3448	6	1	CAP-FXD 1000pF 1 kV		808-548 X5E 102K
A16C29	0160-4005	3	1	CAPACITOR-FXD 1UF +-20% 100VDC CER	04222	SR401E105MAAH
A16C30	0160-4005	3	1	CAPACITOR-FXD 1UF +-20% 100VDC CER	04222	SR401E105MAAH
A16C31	0160-4005	3	1	CAPACITOR-FXD 1UF +-20% 100VDC CER	04222	SR4013105MAAH
A16C32	0160-4005	3	1	CAPACITOR-FXD 1UF +-20% 100VDC CER	04222	SR401E105MAAH
A16C33	0160-4005	3	1	CAPACITOR-FXD 1UF +-20% 100VDC CER	04222	SR401E105MAAH
A16C34	0160-4005	3	1	CAPACITOR-FXD 1UF +-20% 100VDC CER	04222	SR401E105MAAH
A16C35	0160-4892	6	1	CAP-FXD 1uF 25 V	56289	2C37Z5U105M025C
A16C36	0160-4005	3	1	CAPACITOR-FXD 1UF +-20% 100VDC CER	04222	SR401E105MAAH
A16C37	0160-4005	3	1	CAPACITOR-FXD 1UF +-20% 100VDC CER	04222	SR401E105MAAH
A16C38	0160-4892	6	1	CAP-FXD 1uF 25 V	56289	2C37Z5U105M025C
A16C39	0160-4835	7	1	CAPACITOR-FXD .1UF +-10% 50VDC CER	04222	SA115C104KAAH
A16C40	0160-4832	4	1	CAPACITOR-FXD .01UF +-10% 100VDC CER	04222	SA101C103KAAH
A16C41	0160-4803	9	1	CAP-FXD 68pF 100 V	04222	SA102A680JAAH
A16CR1	1901-0539	3	1	DIODE-SCHOTTKY SM SIG	28480	1901-0539
A16CR2	1901-0539	3	1	DIODE-SCHOTTKY SM SIG	28480	1901-0539
A16CR3	1901-0539	3	1	DIODE-SCHOTTKY SM SIG	28480	1901-0539
A16CR4	1901-0539	3	1	DIODE-SCHDTTKY SM SIG	28480	1901-0539
A16CR5	1901-0376	6	1	DIODE-GEN PRP 35V 50MA DO-35	9N171	IN3595

**Indicates factoy-selected value*

HP Part Number 85660-60247

A16 Scan Generator

Reference Designation	HP Part Number	C D	Qty	Description	Mfr Code	Mfr Part Number
A16CR6	1901-0040	1	1	DIODE-SWITCHING 30V 50MA 2NS DO-35	71468	
A16J1	1250-0543	8	1	CONNECTOR-RF SM-SNP M PC 50-OHM	98291	51-053-0349-BE8
A16J2	1250-0543	8	1	CONNECTOR-RF SM-SNP M PC 50-OHM	98291	51-053-0349-BE8
A16J3	1250-0543	8	1	CONNECTOR-RF SM-SNP M PC 50-OHM	98291	51-053-0349-BE8
A16J4	1250-0543	8	1	CONNECTOR-RF SM-SNP M PC 50-OHM	98291	51-053-0349-BE8
A16MP3	1251-2194	1	2	CONNECTOR-SGL CONT SKT .021-IN-BSC-SZ	00779	3-331272-0
A16MP4	1480-0073	6	2	PIN-ROLL .062-IN-DIA .25-IN-LG BE-CU	72962	99-012-062-0250
A16MP6	4040-0749	4	1	EXTR-PC BD BRN PDLYC .062-IN-BD-THKNS 1-		
A16MP7	4040-0754	1	1	EXTR-PC BD BLU POLYC .062-IN-BD-THKNS 1-		
A16MP9	2200-0143	0	2	SCREW-MACH 4-40 .375-IN-LG PAN-HD-POZI	77250	
A16MP10	2190-0003	8	2	WASHER-LK HLCL NO. 4 .115-IN-ID	80120	
A16MP11	0380-1194	1	2	STANDOFF-RND .594-IN-LG 4-40-THD	04729	P-535-M17-F16-440
A16Q1	1855-0020	8	1	TRANSISTOR J-FET N-CHAN D-MODE TO-18 SI	04713	SFE793
A16Q2	1855-0020	8	1	TRANSISTOR J-FET N-CHAN D-MODE TO-18 SI	04713	SFE793
A16Q3	1855-0020	8	1	TRANSISTOR J-FET N-CHAN D-MODE TO-18 SI	04713	SFE793
A16Q4	1855-0020	8	1	TRANSISTOR J-FET N-CHAN D-MODE TO-18 SI	04713	SFE793
A16Q5	1855-0082	2	1	TRANSISTOR J-FET P-CHAN D-MODE SI	04713	
A16Q6	1855-0082	2	1	TRANSISTOR J-FET P-CHAN D-MODE SI	04713	
A16Q7	1855-0082	2	1	TRANSISTOR J-FET P-CHAN D-MODE SI	04713	
A16Q8	1854-0404	0	1	TRANSISTOR NPN SI TO-18 PD=360MW	04713	
A16Q9	1853-0281	9	1	TRANSISTOR PNP 2N2907A SI TO-18 PD=400MW	04713	2N2907A
A16Q10	1853-0322	9	1	TRANSISTOR PNP 2N2946A SI TO-46 PD=400MW	04713	
A16Q11	1853-0322	9	1	TRANSISTOR PNP 2N2946A SI TO-46 PD=400MW	04713	
A16Q12	1854-0637	1	1	TRANSISTOR NPN 2N2219A SI TO-5 PD=800MW	04713	2N2219A
A16Q13	1853-0322	9	1	TRANSISTOR PNP 2N2946A SI TO-46 PD=400MW	04713	
A16Q14	1853-0322	9	1	TRANSISTOR PNP 2N2946A SI TO-46 PD=400MW	04713	
A16Q15	1853-0322	9	1	TRANSISTOR PNP 2N2946A SI TO-46 PD=400MW	04713	
A16R1	0757-0464	5	1	RESISTOR 90.9K +-1% .125W TF TC=0+-100	19701	SFR25H
A16R2	3683-2265	1	1	RESISTOR 22M 5% .25W CC TC=-900/+1200	01121	CB2265
A16R4	0757-0465	6	1	RESISTOR 100K +-1% .125W TF TC=0+-100	19701	SFR25H
A16R5	0757-0470	3	1	RESISTOR 162K +-1% .125W TF TC=0+-100	19701	SFR25H
A16R6	0698-8827	4	1	RESISTOR 1M +-1% .125W TF TC=0+-100	19701	SFR25H
A16R7	0698-3450	9	1	RESISTOR 42.2K 1% .125W TF TC=0+-100	19701	SFR25H
A16R8	0698-3459	8	1	RESISTOR 383K 1% .125W TF TC=0+-100	19701	SFR25H
A16R9	0698-3153	9	1	RESISTOR 3.83K 1% .125W TF TC=0+-100	19701	SFR25H
A16R10	0698-3161	9	1	RESISTOR 38.3K 1% .125W TF TC=0+-100	19701	SFR25H
A16R11	0698-3446	3	1	RESISTOR 383 1% .125W TF TC=0+-100	19701	SFR25H
A16R12	0698-3153	9	1	RESISTOR 3.83K 1% .125W TF TC=0+-100	19701	SFR25H
A16R13	0757-0416	7	1	RESISTOR 511 +-1% .125W TF TC=0+-100	19701	SFR25H
A16R18	0757-0442	9	1	RESISTOR 10K +-1% .125W TF TC=0+-100	19701	SFR25H
A16R19	0757-0438	3	1	RESISTOR 5.11K +-1% .125W TF TC=0+-100	19701	SFR25H
A16R20	0757-0280	3	1	RESISTOR 1K +-1% .125W TF TC=0+-100	19701	SFR25H
A16R21	0757-0442	9	1	RESISTOR 10K +-1% .125W TF TC=0+-100	19701	SFR25H
A16R22	0757-0199	3	1	RESISTOR 21.5K +-1% .125W TF TC=0+-100	19701	SFR25H
A16R23	3757-0459	8	1	RESISTOR 56.2K +-1% .125W TF TC=0+-100	19701	SFR25H
A16R24	3698-3136	8	1	RESISTOR 17.8K 1% .125W TF TC=0+-100	19701	SFR25H
A16R25	1757-0289	2	1	RESISTOR 13.3K +-1% .125W TF TC=0+-100	19701	SFR25H
A16R27	1698-0084	9	1	RESISTOR 2.15K 1% .125W TF TC=0+-100	19701	SFR25H

**Indicates factory-selected value*

HP Part Number 85660-60247

Al6 Scan Generator

Reference Designation	HP Part Number	C D	Qty	Description	Mfr Code	Mfr Part Number
A16R28	0698-3161	9	1	RESISTOR 38.3K 1% .125W TF TC=O+-100	19701	SFR25H
A16R30	0698-3160	8	1	RESISTOR 31.6K 1% .125W TF TC=O+-100	19701	SFR25H
A16R31	0757-0289	2	1	RESISTOR 13.3K +-1% .125W TF TC=O+-100	19701	SFR25H
A16R32	0757-1094	9	1	RESISTOR 1.47K +-1% .125W TF TC=O+-100	19701	SFR25H
A16R33	0757-0439	4	1	RESISTOR 6.81K +-1% .125W TF TC=O+-100	19701	SFR25H
A16R34	0757-0442	9	1	RESISTOR 10K +-1% .125W TF TC=0+-100	19701	SFR25H
A16R35	0698-3154	0	1	RESISTOR 4.22K 1% .125W TF TC=O+-100	19701	SFR25H
A16R38	0698-3157	3	1	RESISTOR 19.6K 1% .125W TF TC=O+-100	19701	SFR25H
A16R39	0698-3158	4	1	RESISTOR 23.7K 1% .125W TF TC=O+-100	19701	SFR25H
A16R40	0757-0442	9	1	RESISTOR 10K +-1% .125W TF TC=O+-100	19701	SFR25H
A16R41	0698-3153	9	1	RESISTOR 3.83K 1% .125W TF TC=O+-100	19701	SFR25H
A16R44	0699-0307	1	1	RESISTOR 36.751: +-0.1% .1W TF TC=O+-10	19701	50232
A16R45	0757-0442	9	1	RESISTOR 10K +-1% .125W TF TC=O+-100	19701	SFR25H
A16R46*	0699-0380	0	1	RESISTOR 73.8741K .025% .1W F TC=O+-5	2848	0699-0380
A16R48	0757-0442	9	1	RESISTOR 10K +-1% .125W TF TC=O+-100	19701	SFR25H
A16R49	0757-0442	9	1	RESISTOR 10K +-1% .125W TF TC=O+-100	19701	SFR25H
A16R50	0757-0442	9	1	RESISTOR 10K +-1% .125W TF TC=O+-100	19701	SFR25H
A16R53	0698-3136	8	1	RESISTOR 17.8K 1% .125W TF TC=O+-100	19701	SFR25H
A16R54	0757-0440	7	1	RESISTOR 7.5K +-1% .125W TF TC=O+-100	19701	SFR25H
A16R55	0757-0459	8	1	RESISTOR 56.2K +-1% .125W TF TC=O+-100	19701	SFR25H
A16R56	0757-0442	9	1	RESISTOR 10K +-1% .125W TF TC=O+-100	19701	SFR25H
A16R57	0698-3443	0	1	RESISTDR 287 1% .125W TF TC=O+-100	19701	SFR25H
A16R58	0757-0280	3	1	RESISTOR 1K +-1% .125W TF TC=O+-100	19701	SFR25H
A16R59	0757-0280	3	1	RESISTOR 1K +-1% .125W TF TC=O+-100	19701	SFR25H
A16R60	0757-0280	3	1	RESISTOR 1K +-1% .125W TF TC=O+-100	19701	SFR25H
A16R62	2100-1762	9	1	RESISTOR-TRMR 20K 5% WW SIDE-ADJ I-TRN		CT-106-4-20K
A16R64	0757-0442	9	1	RESISTOR 10K +-1% .125W TF TC=O+-100	19701	SFR25H
A16R65	0757-0280	3	1	RESISTOR 1K +-1% .125W TF TC=O+-100	19701	SFR25H
A16R66	0698-3158	4	1	RESISTOR 23.7K 1% .125W TF TC=O+-100	19701	SFR25H
A16R67	2100-1760	7	1	RESISTOR-TRMR 5K 5% WW SIDE-ADJ 1-TRN		CT-106-4-5K
A16R68	2100-1759	4	1	RESISTOR-TRMR 2K 5% WW SIDE-ADJ I-TRN		CT-106-4-2K
A16R70	0698-3158	4	1	RESISTOR 23.7K 1% .125W TF TC=O+-100	19701	SFR25H
A16R71	2100-1759	4	1	RESISTOR-TRMR 2K 5% WW SIDE-ADJ I-TRN		CT-106-4-2K
A16R72	2100-1759	4	1	RESISTOR-TRMR 2K 5% WW SIDE-ADJ 1-TRN		CT-106-4-2K
A16R73	0698-3136	8	1	RESISTOR 17.8K 1% .125W TF TC=O+-100	19701	SFR25H
A16R80	0699-0308	2	1	RESISTOR 24.97K +-0.025% .1W TF TC=O+-5	19701	50232
A16R81	0699-0308	2	1	RESISTOR 24.97K +-0.025% .1W TF TC=O+-5	19701	50232
A16R82	0699-0308	2	1	RESISTOR 24.97K +-0.025% .1W TF TC=O+-5	19701	50232
A16R83	0699-0308	2	1	RESISTOR 24.97K +-0.025% .1W TF TC=O+-5	19701	50232
A16R84	0757-0440	7	1	RESISTOR 7.5K +-1% .125W TF TC=O+-100	19701	SFR25H
A16R86	0757-0346	2	1	RESISTOR 10 +-1% .125W TF TC=O+-100	91637	CMF-55-1, T-l
A16R90	0698-3136	8	1	RESISTOR 17.8K 1% .125W TF TC=O+-100	19701	SFR25H
A16R91	0757-0199	3	1	RESISTOR 21.5K +-1% .125W TF TC=O+-100	19701	SFR25H
A16R92	0757-0442	9	1	RESISTOR 10K +-1% .125W TF TC=O+-100	19701	SFR25H
Al6R93	0698-0084	9	1	RESISTOR 2.15K 1% .125W TF TC=O+-100	19701	SFR25H
A16R94	3698-3162	0	1	RESISTOR 46.41: 1% .125W TF TC=O+-100	19701	SFR25H

**Indicates factory-selected value*

HP Part Number 85660-60247

Al 6 Scan Generator

Reference Designation	HP Part Number	C D	Qty	Description	Mfr Code	Mfr Part Number
A16R95	0757-0442	9	1	RESISTOR 10K +-1% .125W TF TC=O+-100	19701	SFR25H
A16R96	0757-0424	7	1	RESISTOR 1.1K +-1% .125W TF TC=O+-100	19701	SFR25H
A16R97	0757-0405	4	1	RESISTOR 162 +-1% .125W TF TC=O+-100	19701	SFR25H
A16R98	5757-3439	9	1	RESISTOR 178K +-1% .125W TF TC=O+-100	19701	SFR25H
A16TP1	1251-0600	0	1	CONNECTOR-SGL CDNT PIN 1.14-MM-BSC-SZ SQ	27264	16-06-0034
A16TP2	1251-0600	0	1	CONNECTOR-SGL CONT PIN 1.14-MM-BSC-SZ SQ	27264	16-06-0034
A16TP3	1251-0600	0	1	CONNECTOR-SGL CDNT PIN 1.14-MM-BSC-SZ SQ	27264	16-06-0034
A16TP4	1251-0600	0	1	CONNECTOR-SGL CONT PIN 1.14-MM-BSC-SZ SQ	27264	16-06-0034
A16TP5	1251-0600	0	1	CONNECTOR-SGL CONT PIN 1.14-MM-BSC-SZ SQ	27264	16-06-0034
A16TP6	1251-0600	0	1	CONNECTOR-SGL CDNT PIN 1.14-MM-BSC-SZ SQ	27264	16-06-0034
A16TP7	1251-0600	0	1	CONNECTOR-SGL CONT PIN 1.14-MM-BSC-SZ SQ	27264	16-06-0034
A16TP8	1251-0600	0	1	CONNECTOR-SGL CONT PIN 1.14-MM-BSC-SZ SQ	27264	16-06-0034
A16TP9	1251-0600	0	1	CONNECTOR-SGL CONT PIN 1.14-MM-BSC-SZ SQ	27264	16-06-0034
A16U1	1826-0601	0	1	IC OP AMP PRCN TO-99 PKG	06665	OP-16FJ
A16U2	1826-0471	2	1	IC OP AMP LOW-DRIFT TO-99 PKG	06665	DP-07CJ SELECTED
A16U3	1826-0601	0	1	IC OP AMP PRCN TO-99 PKG	06665	OP-16FJ
A16U4	1826-0306	2	1	IC COMPARATOR GP QUAD 14-DIP-C PKG	27014	LM339AJ
A16U5	1820-1425	6	1	IC SCHMITT-TRIG TTL LS NAND QUAD 2-INP	01295	SN74LS132N
A16U6	1826-0180	0	1	IC TIMER TTL MONO/ASTBL	18324	NE555N
A16U7	1826-1058	3	1	IC OP AMP GP 8-TO-99 PKG	06665	DP-02CJ
A16U8	1826-1058	3	1	IC OP AMP GP 8-TD-99 PKG	06665	OP-OECJ
A16U9	1826-0092	3	1	IC OP AMP GP DUAL TO-99 PKG	04713	
A16U10	1826-0229	8	1	IC OP AMP LOW-DRIFT TO-99 PKG	06665	OP-05CJ
A16U11	1826-0161	7	1	IC OP AMP GP QUAD 14-DIP-P PKG	27014	LM324N
A16U12	1826-0229	8	1	IC OP AMP LOW-DRIFT TO-99 PKG	06665	OP-05CJ
A16U14	1826-0840	9	1	SAMPLE AND HOLD 14 -CEROIP	34371	HA1-2425-5
A16U15	1810-0206	8	1	NETWORK-RES 8-SIP 10.0K OHM X 7	11236	750-81
A16U16	1820-1196	8	1	IC FF TTL LS D-TYPE POS-EDGE-TRIG COM CL	01295	SN74LS174N
A16U17	1826-0684	9	1	D/A 12-BIT 18-CBRZ/SDR CMOS	24355	AD7541BD(SEL)
A16U18	1820-1196	8	1	IC FF TTL LS D-TYPE POS-EDGE-TRIG COM CL	01295	SN74LS174N
A16U19	1826-0161	7	1	IC OP AMP GP QUAD 14-DIP-P PKG	27014	LM324N
A16U20	1826-0306	2	1	IC COMPARATOR GP QUAD 14-DIP-C PKG	27014	LM339AJ
A16U21	1820-1196	8	1	IC FF TTL LS D-TYPE POS-EDGE-TRIG COM CL	01295	SN74LS174N
A16U22	1826-0541	7	1	D/A 10-BIT 16-PLASTIC CMOS	24355	AD7520JN(SEL)
A16U22	1826-0448	3	1	ALTERNATE FOR 1826-0541	24355	AD7520LN(SEL)
A16U23	1820-1196	8	1	IC FF TTL LS D-TYPE POS-EDGE-TRIG COM CL	01295	SN74LS174N
A16U24	1820-1197	9	1	IC GATE TTL LS NAND QUAD 2-INP	01295	SN74LS00N
A16U25	1820-1197	9	1	IC GATE TTL LS NAND QUAD 2-INP	01295	SN74LS00N
A16U26	1820-1195	7	1	IC FF TTL LS D-TYPE POS-EDGE-TRIG COM CL	01295	SN74LS175N
A16U27	1820-1196	8	1	IC FF TTL LS D-TYPE POS-EDGE-TRIG COM CL	01295	SN74LS174N
A16U28	1826-0541	7	1	D/A 10-BIT 16-PLASTIC CMOS	24355	AD7520JN(SEL)
A16U28	1826-0448	3	1	ALTERNATE FOR 1826-0541	24355	AD7533LN(SEL)
A16U29	1820-1196	8	1	IC FF TTL LS D-TYPE POS-EDGE-TRIG CDM CL	01295	SN74LS174N
A16VR1	1902-3203	6	1	DIODE-ZNR 14.7V 5% DO-35 PD=.4W	04713	
A16VR2	1902-3203	6	1	DIODE-ZNR 14.7V 5% DO-35 PD=.4W	04713	
A16VR3	1902-0625	0	1	DIODE-ZNR 1N829 6.2V 5% DO-35 PD=.25W TC	04713	1N829
A16W1	1460-1489	8	1	WIREFORM BE CU AG	17450	

**Indicates factory-selected value*

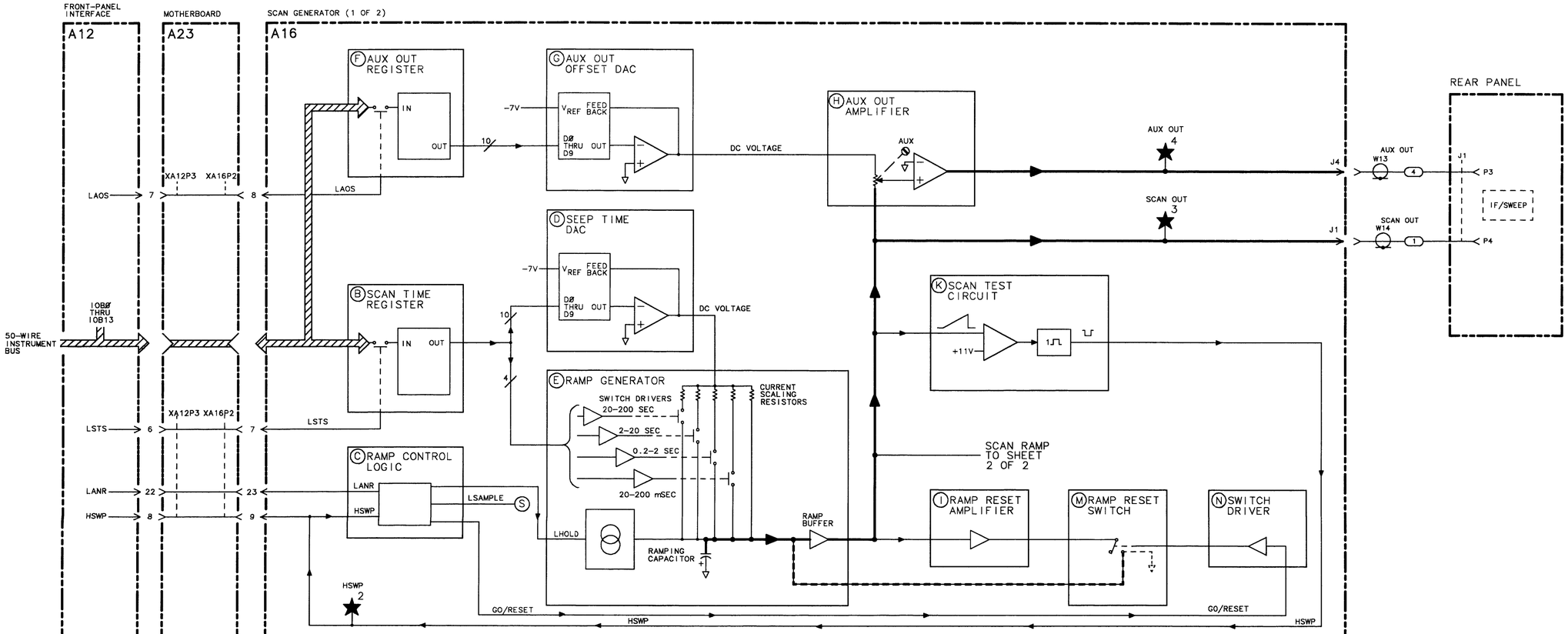

A16 SCAN GENERATOR, BLOCK DIAGRAM (1 OF 2)

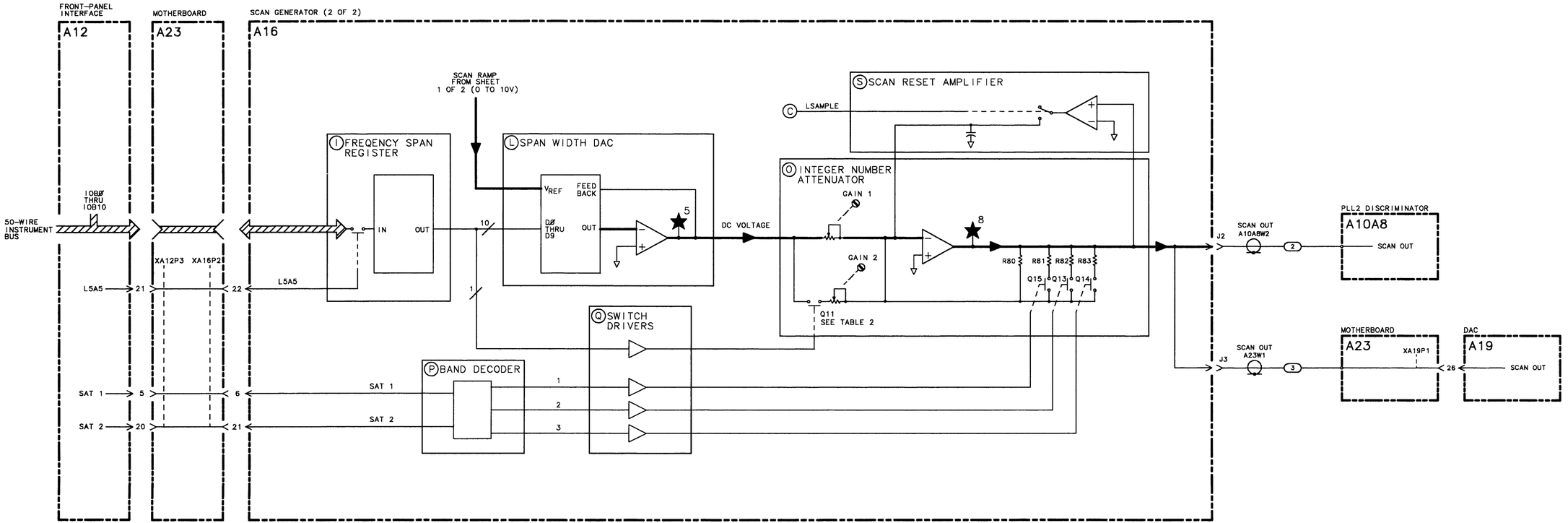

A16 SCAN GENERATOR, BLOCK DIAGRAM (2 OF 2)

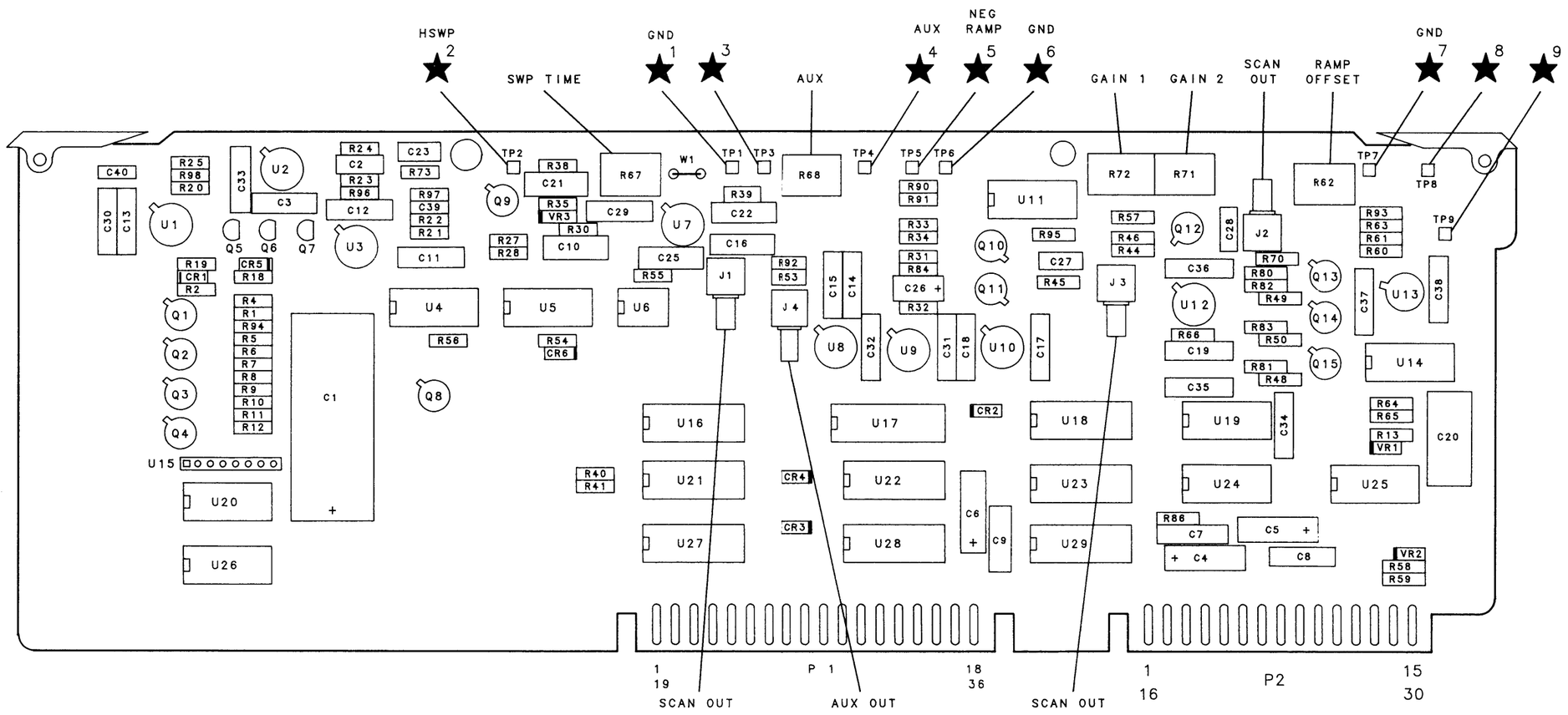

A16 SCAN GENERATOR BOARD ASSEMBLY, COMPONENT LOCATION:85660-60198

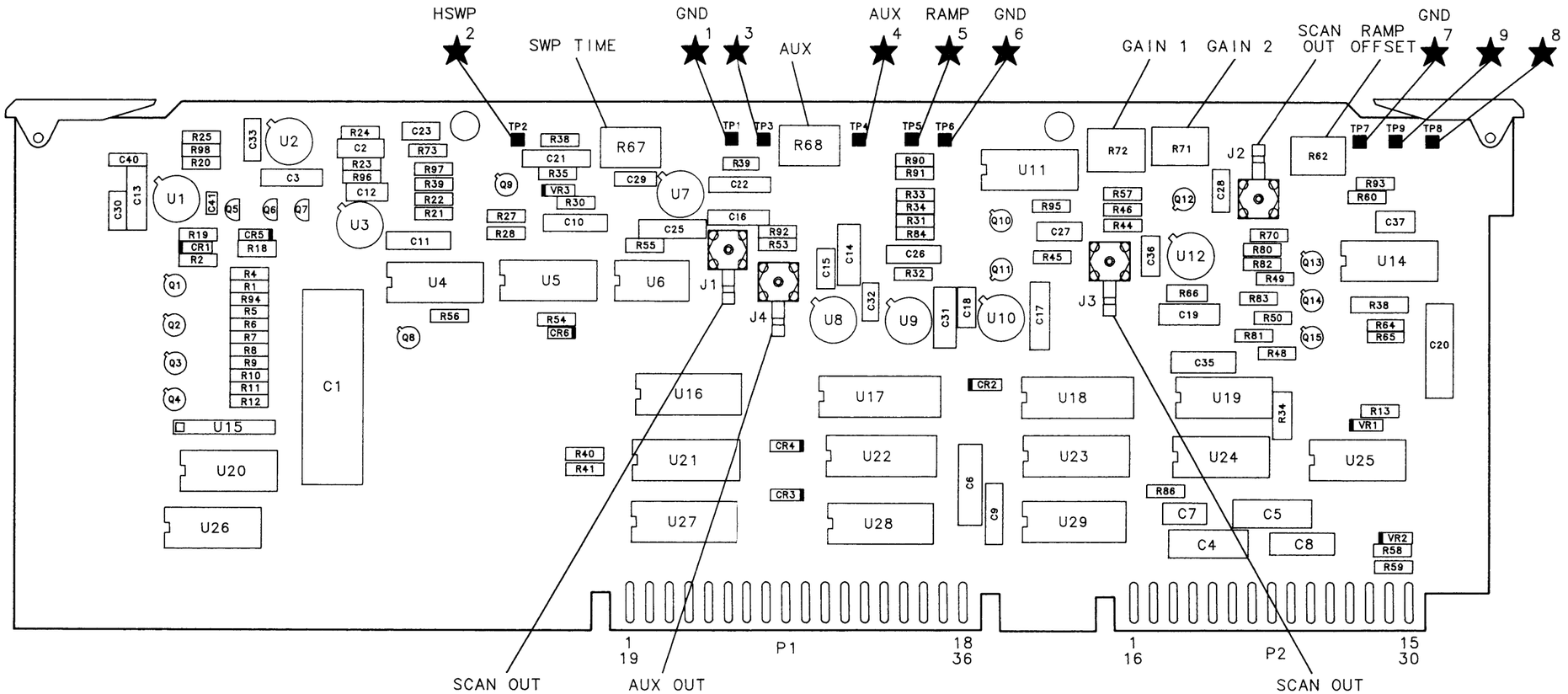

A16 SCAN GENERATOR BOARD ASSEMBLY, COMPONENT LOCATIONS:85660-60247

A16 SCAN GENERATOR
85660-60198 (1 OF 2)
(SERIAL PREFIXES: 2410A–2430A)

P1

PIN	SIGNAL	TO/FROM	FUNCTION BLOCK
1	GND		NC
19	LB10	A15P2-19	NC
2	ADRØ	A15P2-2	NC
20	ADR1	A15P2-20	NC
3	ADR2	A15P2-3	NC
21	ADR3	A15P2-21	NC
4	ADR4	A15P2-4	NC
22	NOT USED	A15P2-22	NC
5	10BØ	A15P2-5	B
23	10B1	A15P2-23	B
6	10B2	A15P2-6	B
24	0B3	A15P2-24	B
7	0B4	A15P2-7	B
25	10B5	A15P2-25	B
8	10B6	A15P2-8	B
26	10B7	A15P2-26	B
9	10B8	A15P2-9	B
27	10B9	A15P2-27	B
10	10B1Ø	A15P2-10	B
28	10B11	A15P2-28	B
11	10B12	A15P2-11	B
29	10B13	A15P2-29	B
12	10B14	A15P2-12	NC
30	10B15	A15P2-30	NC
13	NC		
31	NC		
14	NC		
32	NC		
15	NC		
33	NC		
16	NC		
34	NC		
17	+5.2V	A17P1-16,38	R
35	+5.2V	A17P1-16,38	R
18	GNO		NC
36	GND		NC

P2

PIN	SIGNAL	TO/FROM	FUNCTION BLOCK
1	+20V	A17P1-14,36	R
16	+20V	A17P1-14,36	R
2	GND		R
17	GND		R
3	+12V	A17P1-20,42	NC
18	+12V	A17P1-20,42	NC
4	-5.2V	A18P1-16,34	NC
19	-5.2"	A18P1-16,34	NC
5	-10"	A18P1-13,31	R
20	-10"	A18P1-13,31	R
6	SAT1	A12P3-5	P
21	SAT2	A12P3-20	P
7	LSTS	A12P3-6	B
22	LSAS	A12P3-21	I
8	LAOS	A12P3-7	F
23	LANR	A12P3-22	C
9	HSWP	A12P3-8	C
24	NC		
10	NC		
25	NC		
11	NC		
26	NC		
12	-40V	A18P1-11,29	R
27	-40V	A18P1-11,29	R
13	NC		
28	NC		
14	NC		
29	NC		
15	NC		
30	NC		

1. REFERENCE DESIGNATORS WITHIN THIS ASSEMBLY ARE ABBREVIATED. FOR COMPLETE REFERENCE DESIGNATION, PREFIX ABBREVIATION WITH ASSEMBLY DESIGNATION.

2. UNLESS OTHERWISE INDICATED:
RESISTANCE IS IN OHMS (Ω)
CAPACITANCE IS IN MICROFARADS (μF)
INDUCTANCE IS IN MICROHENRIES (μH)

3. UNLESS OTHERWISE INDICATED:
SIGNALS ENTER AT LEFT SIDE OR TOP AND EXIT AT RIGHT SIDE OR BOTTOM OF FUNCTION BLOCKS.

4 "15 PIN CONFIGURATION:
U15 (10K)

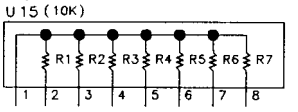

5. MNEMONIC TABLE.

MNEMONIC	DESCRIPTION
LSAS	LOW=SCAN ATTENUATOR STROBE
LSTS	LOW-SCAN TIME STROBE
LAOS	LOW=AUX OUT STROBE
HSWP	HIGH=SWEEPING
SAT 1	SCAN INTEGER ATTENUATOR LSB
SAT2	SCAN INTEGER ATTENUATOR MSB
LANR	LOW=ANALOG RESET

6. ACCEPTABLE VALUES FOR R46* ARE:

VALUE	PART NUMBER
74.2%	0699-0311 (CO-7)
73.874K	0699-0380 (CD=0)

THE FOLLOWING COMPONENTS ARE NOT USED:

U4C, "40
U11B, U11D
U15R5, U15R6, U15R7
"190
U24A, "240

8. C26 HAS BEEN CHANCED FROM 1μF (HP PART NUMBER 0180-0291) TO 0.1μF (HP PART NUMBER 0180-1743) TO SUPPRESS VOLTAGE SPIKES ON THE AUX OUT SIGNAL.

A16

Al6 Scan Generator, Schematic Diagram

A16 SCAN GENERATOR
85660-60198 (2 OF 2)
(SERIAL PREFIXES:
2410A-2430A)

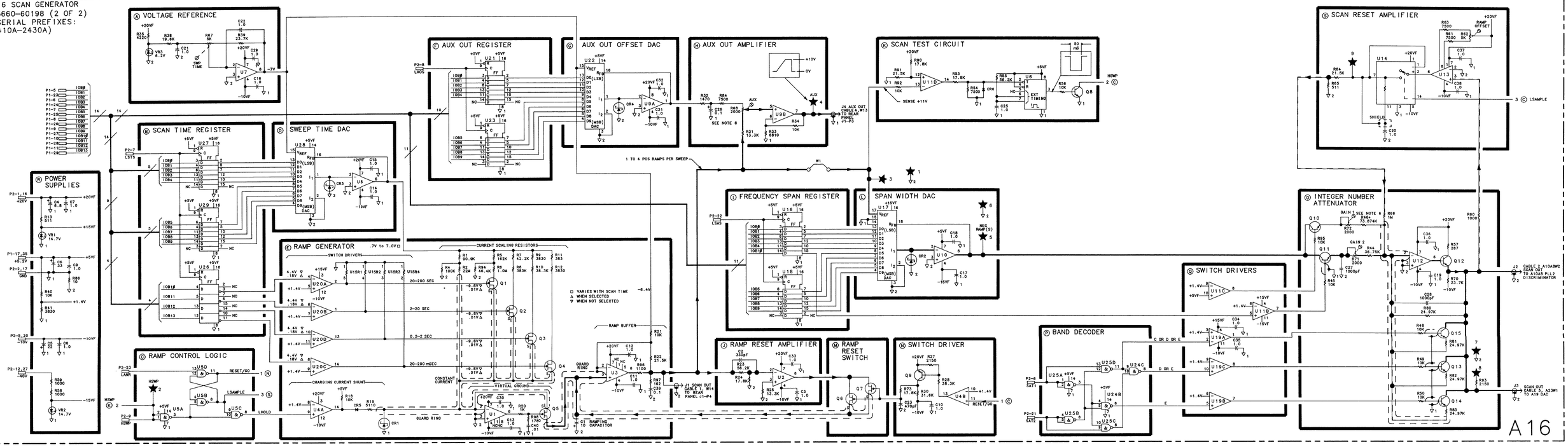

A16 SCAN GENERATOR, SCHEMATIC DIAGRAM (2 OF 2)

AI6 SCAN GENERATOR
85660-60247 (1 OF 2)
(SERIAL PREFIX: 2449A)

P1

PIN	SIGNAL	TO/FROM	FUNCTION BLOCK
1	GND		NC
19	LB10	A15P2-19	NC
2	ADR0	A15P2-2	NC
20	ADR1	A15P2-20	NC
3	ADR2	A15P2-3	NC
21	ADR3	A15P2-21	NC
4	ADR4	A15P2-4	NC
22	NOT USED	A15P2-22	NC
5	10B0	A15P2-5	B
23	10B1	A15P2-23	B
6	10B2	A15P2-6	B
24	10B3	A15P2-24	B
7	10B4	A15P2-7	B
25	10B5	A15P2-25	B
8	10B6	A15P2-8	B
26	10B7	A15P2-26	B
9	10B8	A15P2-9	B
27	1089	A15P2-27	B
10	10B10	A15P2-10	B
28	10B11	A15P2-28	B
11	10B12	A15P2-11	B
29	10B13	A15P2-29	B
12	10B14	A15P2-12	NC
30	10B15	A15P2-30	NC
13	NC		
31	NC		
14	NC		
32	NC		
15	NC		
33	NC		
16	NC		
34	NC		
17	+5.2V	A17P1-16,38	R
35	+5.2V	A17P1-16,38	R
18	GND		NC
36	GND		NC

P2

PIN	SIGNAL	TO/FROM	FUNCTION BLOCK
1	+20V	A17P1-14,36	R
16	+20V	A17P1-14,36	R
2	GND		R
17	GND		R
3	+12V	A17P1-20,42	NC
18	+12V	A17P1-20,42	NC
4	-5.2V	A18P1-16,34	NC
19	-5.2V	A18P1-16,34	NC
5	-10V	A18P1-13,31	R
20	-10V	A18P1-13,31	R
6	SAT1	A12P3-5	P
21	SAT2	A12P3-20	P
7	LSTS	A12P3-6	B
22	LSAS	A12P3-21	I
8	LAOS	A12P3-7	F
23	LANR	A12P3-22	C
9	HSWP	A12P3-8	C
24	NC		
10	NC		
25	NC		
11	NC		
26	NC		
12	-40V	A18P1-11,29	R
	A18P1-11,29	R	
14	NC		
29	NC		
5	NC		
10	NC		

1. REFERENCE DESIGNATORS WITHIN THIS ASSEMBLY ARE ABBREVIATED. FOR COMPLETE REFERENCE DESIGNATION, PREFIX ABBREVIATION WITH ASSEMBLY DESIGNATION.
2. UNLESS OTHERWISE INDICATED! RESISTANCE IS IN OHMS (Ω) CAPACITANCE IS IN MICROFARADS (µF) INDUCTANCE IS IN MICROHENRIES (µH)
3. UNLESS OTHERWISE INDICATED. SIGNALS ENTER AT LEFT SIDE OR TOP AND EXIT AT RIGHT SIDE OR BOTTOM OF FUNCTION BLOCKS.
4. "15 PIN CONFIGURATION: U15 (10K)

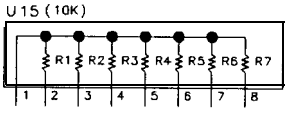

5. MNEMONIC TABLE:

MNEMONIC	DESCRIPTION
LSAS	LOW=SCAN ATTENUATOR STROBE
LSTS	LOW=SCAN TIME STROBE
LAOS	LOW=AUX OUT STROBE
HSWP	HIGH=SWEEPING
SAT1	SCAN INTEGER ATTENUATOR LSB
SAT2	SCAN INTEGER ATTENUATOR MSB
LANR	LOW=ANALOG RESET

6. ACCEPTABLE VALUES FOR R46* ARE:

VALUE	PART NUMBER
74.25K	0699-0311 (CD=7)
73.874K	0699-0380 (CD=0)

THE FOLLOWING COMPONENTS ARE NOT USED:

U4C, U4D
U11B, U11D
U15R5, U15R6, U15R7
"190
U24A, U24D

8. C26 HAS BEEN CHANGED FROM 1µF (HP PART NUMBER 0180-0291) TO 0.1µF (HP PART NUMBER 0180-1743) TO SUPPRESS VOLTAGE SPIKES ON THE AUX OUT SIGNAL.

A16

Al6 Scan Generator, Schematic Diagram

A16 SCAN GENERATOR
85660-60247 (2 OF 2)
(SERIAL PREFIX: 2449A)

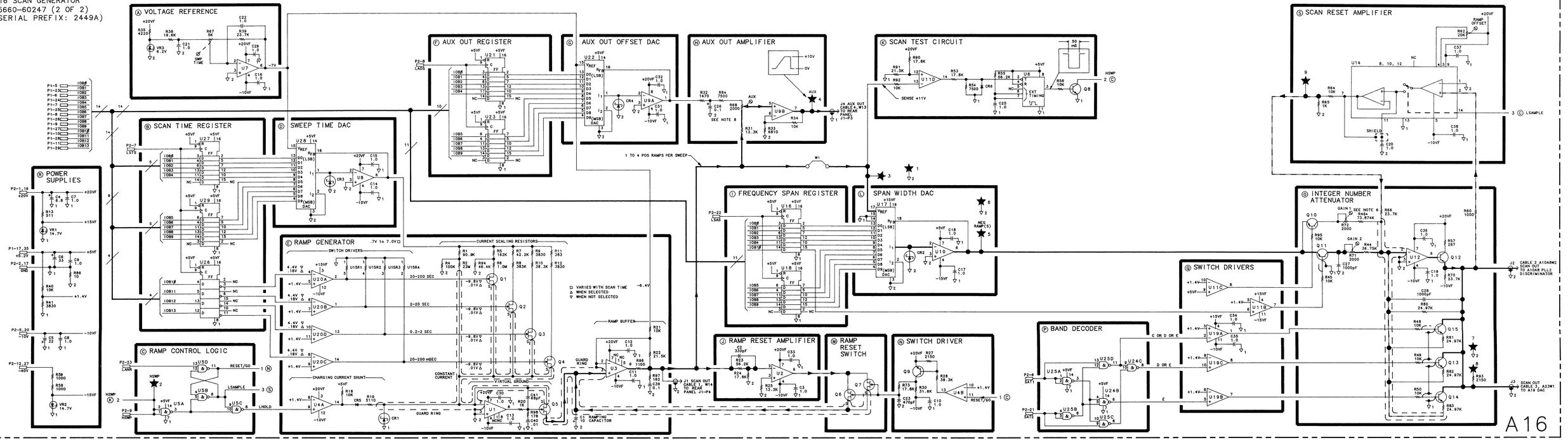

A16

A17

A17 Positive Regulator, Circuit Description

A17 Positive Regulator provides +20 V, +12 V, and +5.2 V regulated voltages to the instrument. It also provides for thermal shutdown at temperatures above 85°C or if the fan fails, controls power to the oscillator in the A22 10 MHz Frequency Standard and ensures power-up and power-down operation that will not invalidate data in Al5 Controller. The relationship of Al7 to A8 Rectifier, A23 Motherboard, and Al8 Negative Regulator is shown on the A8 Rectifier schematic.

Front-Panel Shutdown Ⓕ

When the front-panel LINE switch is in STANDBY, the LSBY line is grounded, fan relay K1 on the A23 Motherboard is energized turning the fan off, and the STANDBY LED is turned on.

Pin 9 of U3C is also at ground when LSBY is grounded so the output of U3C is at +10 V, turning on Q11 through R41. Q11 sinks all of the current supplied by the compound current source Q1 and Q2, which turns off the +20 V supply series-pass transistor A23Q3, located on the A23 Motherboard. All other supplies are referenced to the output of the $20 V Regulator, so they are also disabled. (The +22 V supply is an exception. It is always on as long as the instrument has ac power from the line.)

When the front-panel LINE switch is switched to the ON position, the LSBY line is no longer grounded, the fan relay K1 is no longer energized, and the fan turns on. LSBY rises to about +22 V through the fan relay coil. This causes the output of U3C to go low, turning off Q11. The current source of Q1 and Q2 can now supply current to A23Q3 on the A23 Motherboard, and the +20 V supply will turn on.

Thermal Shutdown Ⓘ

U3D senses the voltage across thermistor RT1. The resistance of RT1 is nominally 1000 ohms at 25°C and drops to 107 ohms at 85°C. When the resistance drops, the output of U3D rises, turning on the thermal shutdown LED DS3 and also Q12, which disables the current source in the +20 V supply, shutting the supply off. CR5 and R52 provide hysteresis so the instrument will not turn on again until the temperature drops to 55°C.

+20 V Regulator Ⓐ

The +20 V supply has as its reference a 6.2 V zener diode VR2 biased from the output of the j-20 V supply, Ⓔ on the schematic. The +20 V output is divided down by R9, R50, and R10 to 6.2 V. This voltage is compared with the +6.2 V reference voltage by amplifier U1. This amplifier sinks current from the current source Q1 so that the voltage at the base of the series-pass transistor A23Q23 (on A23 Motherboard) is such that the output of the supply is at +20 V.

A simple form of foldback current limiting is provided by the current sensing resistor R3, R4, R5, CR4, and Q3. 0 vervoltage protection is provided by the +20 V crowbar Ⓖ consisting of VR3 and CR1. DS2 is an LED which indicates the presence of an output voltage. Fuse F2 provides further protection for the supply.

+20 V Switched Supply Ⓙ

The +20 V switched supply provides power to the oscillator circuits of the A22 10 MHz Frequency Standard. If the Reference Disable line HSTD is low, Q10 is off, and Q9 is off, so no power is supplied to the internal 10 MHz oscillator. When HSTD goes high, both Q9 and Q10 turn on, and +20 V is supplied to the internal 10 MHz oscillator.

+12 V Regulator Ⓑ

The +12 V supply is a 12 V floating regulator with its reference terminal biased at 11 V by R24 and VR8. This supply is enabled by the presence of the -5.2 V supply, which causes Q8 to turn off, allowing the zener diode VR8 to be biased by the current flowing from the output of the supply through R24. LED DS4 provides a visible indication of an output voltage. Overvoltage protection is provided by the +12 V crowbar Ⓓ. The regulator itself is internally protected, but further protection is provided by CR3 and F1.

+5.2 V Regulator Ⓒ

The operation of this supply is similar to that of the +20 V supply. Its reference is from the voltage divider R36 and R49 from the +20 V supply. This voltage is compared with the divided down output voltage by U2, which drives the Darlington-connected transistors Q6 and Q4 and the series-pass transistor A23Q4 on the A23 Motherboard. Foldback current limit is provided by R27-29, R31, R32, and Q5. The output crowbar Ⓗ provides overvoltage protection. Further protection is provided by F3.

Power Up/Down Detector Ⓚ

A power-up indication HPUP is provided to allow the instrument to turn on and off in an orderly manner. The HPUP line goes high when all of the following conditions are met:

1. The rectified dc voltage of the +5.2 V Unreg supply is above 8.6 V (provides an indication that the Line Voltage is present).
2. The +5.2 V output is higher than +4.9 V.
3. The front-panel shutdown and thermal shutdown circuits allow the instrument to be turned on.

   If both the front-panel shutdown and thermal shutdown transistors Q11 and Q12 are off, CR11 is reverse biased. If the output of the i-5.2 V supply is greater than i-4.9 V,

the output of U3A is high, and CR12 is reverse biased. If the dc input voltage to the +5.2 V supply is greater than +8.6 V, then the voltage at pin 5 of U3B is greater than +6.2 V, and the output of U3B is high. This turns on transistors Q13 and Q7, pulling the collector of Q7 to about +5 V. This provides the HPUP signal.

If any of the above conditions are not met, HPUP remains low. R59 and Cl4 provide an additional time delay at turn-on to allow the supplies to settle down.

RF Section Internal Fuse Replacement

Note For location of hardware and cables referred to in this procedure, see Figure 1.

Warning Remove ac line cord from both instruments before proceeding with this procedure.

1. Position instrument upside-down as show in view A.
2. Remove feet ① from rear of RF Section by removing screws ② show in view A.
3. Remove bottom cover by loosening screw ③ and pulling cover toward rear of instrument.
4. Location of fuses is shown in view B.

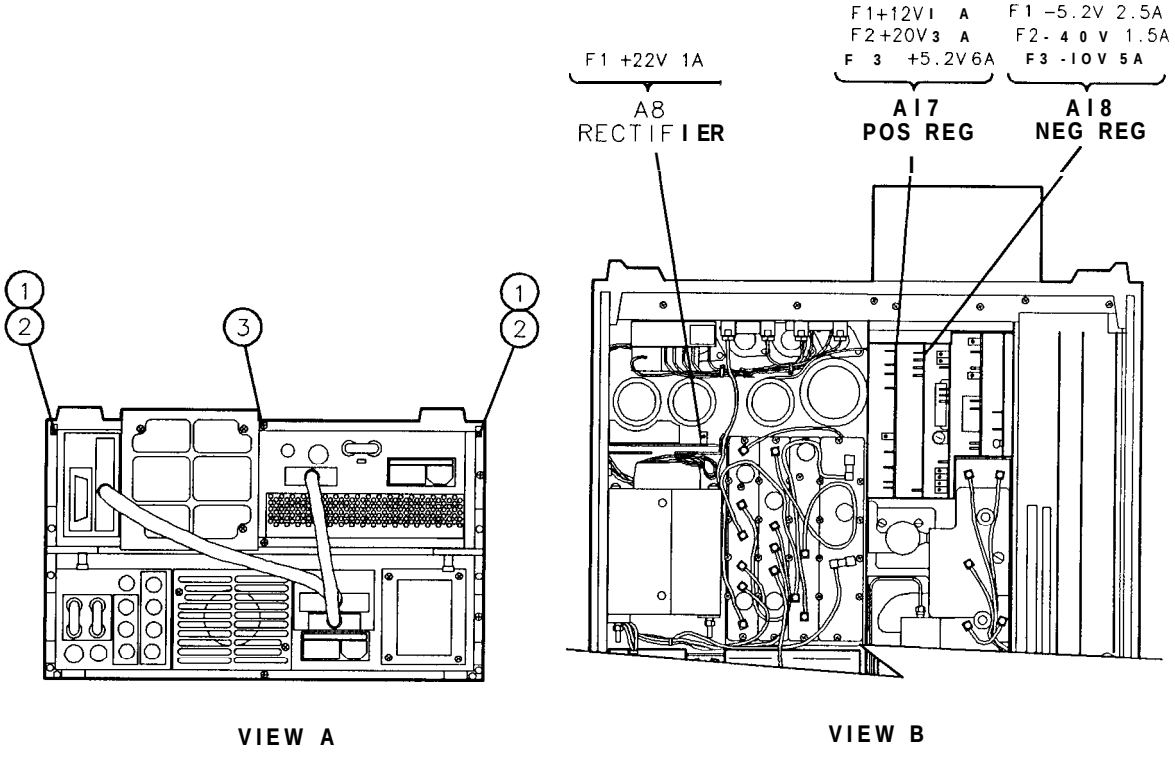

Figure 1. Internal Fuse Placement

HP Part Number 85660-60174

Al7 Positive Regulator

Reference Designation	HP Part Number	C D	Qty	Description	Mfr Code	Mfr Part Number
A17	95660-60174	7	1	BOARD ASSEMBLY, POSITIVE REGULATOR (SERIAL PREFIXES: 2410A - 2532A)	28480	85660-60174
A17C1	0180-2205	3	1	CAPACITOR-FXD .33UF+-10% 35VOC TA	56289	150D334X9035A2-DYS
A17C2	3180-0116	1	1	CAPACITOR-FXD 6.8UF+-10% 35VDC TA	56289	150D685X9035B2-DYS
A17C3	0180-1746	5	1	CAPACITOR-FXD 15UF+-10% 2OVDC TA	56289	150D156X9020B2-DYS
A17C4	0160-2199	2	1	CAPACITOR-FXD 30PF +-5% 300VDC MICA	28480	0160-2199
A17C5	0180-0228	6	1	CAPACITOR-FXD 22UF+-10% 15VDC TA	56289	150D226X9015B2-DYS
A17C6	0180-0116	1	1	CAPACITOR-FXD 6.8UF+-10% 35VDC TA	56289	150D685X9035B2-DYS
A17C7	0160-0573	2	1	CAPACITOR-FXD 4700PF +-20% 100VDC CER	28480	0160-0573
A17C8	0160-4256	6	1	CAPACITOR-FXD .047UF +-20% 200VDC CER	16546	CW30 B 473M
A17C9	0160-4256	6	1	CAPACITOR-FXD .047UF +-20% 2OOVDC CER	16546	CW30 B 473M
A17C10	3160-2199	2	1	CAPACITOR-FXD 30PF +-5% 300VDC MICA	28480	0160-2199
A17C11	0180-0197	8	1	CAPACITOR-FXD 2.2UF+-10% 20VDC TA	56289	150D225X9020A2-DYS
A17C12	0180-0228	6	1	CAPACITOR-FXD 22UF+-10% 15VDC TA	56289	150D226X9015B2-DYS
A17C13	0160-4892	6	1	CAP-FXD 1uF 25 V	56289	2C37Z5U105M025C
A17C14	0180-0197	8	1	CAPACITOR-FXD 2.2UF+-10% 20VDC TA	56289	150D225X9020A2-DYS
A17C15	0180-0197	8	1	CAPACITOR-FXD 2.2UF+-10% 20VDC TA	56289	150D225X9020A2-DYS
A17C16	0160-4832	4	1	CAPACITOR-FXD .01UF +-10% 100VDC CER	04222	SA101C103KAAH
A17CR1	1884-0018	5	1	THYRISTOR-SCR 2N4186 VRRM=200	04713	2N4186
A17CR2	1884-0046	9	1	THYRISTOR-SCR VRRM=50		C230F
A17CR3	1901-0743	1	1	DIODE-PWR RECT 1N4004 400V 1A DO-41	71744	1N4004
A17CR4	1901-0033	2	1	DIODE-GEN PRP 180V 200MA DO-35	9N171	1N645
A17CR5	1901-0033	2	1	DIODE-GEN PRP 180V 200MA DO-35	9N171	1N645
A17CR6	1901-0033	2	1	DIODE-GEN PRP 180V 200MA DO-35	9N171	1N645
A17CR7	1884-0018	5	1	THYRISTOR-SCR 2N4186 VRRM=200	04713	2N4186
A17CR11	1901-0033	2	1	DIODE-GEN PRP 180V 200MA DO-35	9N171	1N645
A17CR12	1901-0033	2	1	DIODE-GEN PRP 180V 200MA DO-35	9N171	1N645
A17DS1	1990-0487	7	1	LED-LAMP LUM-INT=2MCD BVR=5V	28480	HLMP-1401
A17DS2	1990-0487	7	1	LED-LAMP LUM-INT=2MCD BVR=5V	28480	HLMP-1401
A17DS3	1990-0404	8	1	LED-LAMP LUM-INT=500UCD IF=50MA-MAX	28480	HLMP-1000
A17DS4	1990-0487	7	1	LED-LAMP LUM-INT=2MCD BVR=5V	28480	HLMP-1401
A17F1	2110-0001	8	1	FUSE IA 250V NTD FE UL	75915	312 001
A17F2	2110-0003	0	1	FUSE 3A 250V NTD FE UL	75915	312 003
A17F3	2110-0056	3	1	FUSE 6A 250V NTD FE UL	75915	312 006
A17MP1				NOT ASSIGNED		
A17MP3	3520-0128	7	2	SCREW-MACH 2-56 .25-IN-LG PAN-HD-POZI	77250	
A17MP4	2110-0269	0	6	FUSEHOLDER-CLIP TYPE .25D-FUSE	28480	2110-0269
A17MP5	2190-0014	1	2	WASHER-LK INTL T NO. 2 .089-IN-ID	78189	1902-00-00-2580
A17MP6	2190-0027	6	1	WASHER-LK INTL T 1/4 IN .256-IN-ID	78189	1914-00
A17MP7	2950-0051	8	1	NUT-HEX-DBL-CHAM 1/4-28-THD .094-IN-THK	73743	
A17MP8	5000-9043	6	1	EXTRACTOR PIN	28480	5000-9043
A17MP9	5040-6843	2	1	PC BOARD EXTRACTOR	28480	5040-6843
A17MP10	3151-0013	4	1	WIRE 22AWG 1X22	92194	298
A17MP11	36701-20036	8	1	DIODE MOUNTING BLOCK	28480	86701-20036
A17MP12	1200-0081	4	10	INSULATOR-FLG-BSHG NYLON	26365	974 307
A1791	1853-0012	4	1	TRANSISTOR PNP 2N2904A SI TO-39 PD=600MW	04713	2N2904A
A17Q2	1853-0451	5	1	TRANSISTOR PNP 2N3799 SI TO-18 PD=360MW	04713	
A17Q3	1854-0404	0	1	TRANSISTOR NPN SI TO-18 PD=360MW	04713	

**Indicates factory-selected value*

HP Part Number 85660-60174

Al7 Positive Regulator

Reference Designation	HP Part Number	CD	Qty	Description	Mfr Code	Mfr Par! Number
A17Q4	1854-0441	5	1	TRANSISTOR NPN SI PD=5.8W FT=800KHZ	28480	1845-0441
A17Q5	1854-0404	0	1	TRANSISTOR NPN SI TO-18 PD=360MW	04713	
A17Q6	1854-0404	0	1	TRANSISTOR NPN SI TO-18 PD=360MW	04713	
A17Q7	1853-0281	9	1	TRANSISTOR PNP 2N2907A SI TO-18 PD=400MW	04713	2N2907A
A17Q8	1854-0404	0	1	TRANSISTOR NPN SI TO-18 PD=360MW	04713	
A17Q9	1853-0281	9	1	TRANSISTOR PNP 2N2907A SI TO-18 PD=400MW	04713	2N2907A
A17Q10	1854-0404	0	1	TRANSISTOR NPN SI TO-18 PD=360MW	04713	
A17Q11	1854-0404	0	1	TRANSISTOR NPN SI TO-18 PD=360MW	04713	
A17Q12	1854-0404	0	1	TRANSISTOR NPN SI TO-18 PD=360MW	04713	
A17Q13	1854-0477	7	1	TRANSISTOR NPN 2N2222A SI TO-18 PD=500Mw	04713	2N2222A
A17R1	0757-0443	C	1	RESISTOR 11K +-1% .125W TF TC=O+-100	19701	SFR25H
A17R2	0757-0401	C	1	RESISTOR 100 +-1% .125W TF TC=O+-100	19701	SFR25H
A17R3	0811-1659	8	1	RESISTOR .27 +-5% 2W PWI TC=O+-800	11502	SPH
A17R4	0757-041s	C	1	RESISTOR 681 1% .125W F TC=O+-100	24546	C4-1/8-TO-619R-F
A17R5	0757-0443	C	1	RESISTOR 11K +-1% .125W TF TC=O+-100	19701	SFR25H
A17R6	0757-0394	C	1	RESISTOR 51.1 +-1% .125W TF TC=O+-100	19701	SFR25H
A17R7	0698-3150	6	1	RESISTOR 2.37K 1% .125W TF TC=O+-100	19701	SFR25H
A17R8	0698-3442	9	1	RESISTOR 237 1% .125W TF TC=O+-100	19701	SFR25H
A17R9	0698-8465	6	1	RESISTOR 7.15K +-0.5% .125W TF TC=O+-50	19701	5033R
A17R10	0698-6835	0	1	RESISTOR 3.16K +-0.5% .125W TF TC=O+-50	19701	5033R
A17R11	0757-0280	3	1	RESISTOR 1K +-1% .125W TF TC=O+-100	19701	SFR25H
A17R12	0757-0278	9	1	RESISTOR 1.78K +-1% .125W TF TC=O+-100	19701	SFR25H
A17R13	0683-0275	9	1	RESISTOR 2.7 5% .25W CF TC=O-400	2M627	R-25J
A17R14	1698-3444	1	1	RESISTOR 316 1% .125W TF TC=O+-100	19701	SFR25H
A17R15	3757-0346	?	1	RESISTOR 10 +-1% .125W TF TC=O+-100	91637	CMF-55-1. T-l
A17R16	0757-0278	9	1	RESISTOR 1.78K +-1% .125W TF TC=O+-100	19701	SFR25H
A17R17	0698-3162	C	1	RESISTOR 46.4K 1% .125W TF TC=O+-100	19701	SFR25H
A17R18	0757-0442	C	1	RESISTOR 10K +-1% .125W TF TC=O+-100	19701	SFR25H
A17R19	0757-0438	3	1	RESISTOR 5.11K +-1% .125W TF TC=O+-100	19701	SFR25H
A17R20	0698-0083	8	1	RESISTOR 1.96K 1% .125W TF TC=O+-100	19701	SFR25H
A17R21	0757-0465	6	1	RESISTOR 100K +-1% .125W TF TC=O+-100	19701	SFR25H
A17R22	0757-0443	C	1	RESISTOR 11K +-1% .125W TF TC=O+-100	19701	SFR25H
A17R23	0757-0438	3	1	RESISTOR 5.11K +-1% .125W TF TC=O+-100	19701	SFR25H
A17R24	3757-039s	5	1	RESISTOR 82.5 +-1% .125W TF TC=O+-100	19701	SFR25H
A17R25	3757-0280	3	1	RESISTOR 1K +-1% .125W TF TC=O+-100	19701	SFR25H
A17R26	0757-0401	0	1	RESISTOR 100 +-1% .125W TF TC=O+-100	19701	SFR25H
A17R27	1811-1661	2	1	RESISTOR .39 +-5% 2W PWI TC=O+-800	11502	SPH
A17R28	0811-1661	2	1	RESISTOR .39 +-5% 2W PWI TC=O+-800	11502	SPH
A17R29	1811-1661	2	1	RESISTOR .39 +-5% 2W PWI TC=O+-800	11502	SPH
A17R30	1757-041s	0	1	RESISTOR 681 +-1% .125W TF TC=O+-100	19701	SFR25H
A17R31	0757-0420	3	1	RESISTOR 750 +-1% .125W TF TC=O+-100	19701	SFR25H
A17R32	0698-3154	0	1	RESISTOR 4.22K 1% .125W TF TC=O+-100	19701	SFR25H
A17R33	0757-0280	3	1	RESISTOR 1K +-1% .125W TF TC=O+-100	19701	SFR25H
A17R34	0698-8466	7	1	RESISTOR 942 +-0.5% .125W TF TC=O+-50	19701	50338
A17R35	0698-6835	C	1	RESISTOR 3.16K +-0.5% .125W TF TC=O+-50	19701	5033R
A17R36	0698-6835	0	1	RESISTOR 3.16K +-0.5% .125W TF TC=O+-50	19701	5033R
A17R37	0683-0275	9	1	RESISTOR 2.7 5% .25W CF TC=O-400	2M627	R-25J

**Indicates facto y-selected value*

HP Part Number 85660-60174

Al7 Positive Regulator

Reference Designation	HP Part Number	CD	Qty	Description	Mfr Code	Mfr Part Number
A17R38	0698-3444	1	1	RESISTOR 316 1% .125W TF TC=O+-100	19701	SFR25H
A17R39	0757-0401	0	1	RESISTOR 100 +-1% .125W TF TC=O+-100	19701	SFR25H
A17R40	0757-0346	2	1	RESISTOR 10 +-1% .125W TF TC=O+-100	91637	CMF-55-1, T-l
A17R41	0698-3150	6	1	RESISTOR 2.37K 1% .125W TF TC=O+-100	19701	SFR25H
A17R42	0757-0418	9	1	RESISTOR 619 +-1% .125W TF TC=O+-100	19701	SFR25H
A17R43	0698-3156	2	1	RESISTOR 14.7K 1% .125W TF TC=O+-100	19701	SFR25H
A17R44	0757-0459	a	1	RESISTOR 56.2K +-1% .125W TF TC=O+-100	19701	SFR25H
A17R45	0698-3150	6	1	RESISTOR 2.37K 1% .125W TF TC=O+-100	19701	SFR25H
A17R46	0698-3150	6	1	RESISTOR 2.37K 1% .125W TF TC=O+-100	19701	SFR25H
A17R47	0757-0442	9	1	RESISTOR 10K +-1% .125W TF TC=O+-100	19701	SFR25H
A17R48	0698-3444	1	1	RESISTOR 316 1% .125W TF TC=O+-100	19701	SFR25H
A17R49	0698-8464	5	1	RESISTOR 12.6K +-0.5% .125W TF TC=O+-50	19701	5033R
A17R50	2100-3095	5	1	RESISTOR-TRMR 200 10% TKF SIDE-ADJ 17-TR	73138	89PR200
A17R51	0757-0280	3	1	RESISTOR 1K +-1% .125W TF TC=O+-100	19701	SFR25H
A17R52	0698-0084	9	1	RESISTOR 2.15K 1% .125W TF TC=O+-100	19701	SFR25H
A17R53	0698-4485	6	1	RESISTOR 107 +-1% .125W TF TC=O+-100	91637	CMF-55-1, T-l
A17R54	0757-0280	3	1	RESISTOR 1K +-1% .125W TF TC=O+-100	19701	SFR25H
A17R55	0757-0401	0	1	RESISTOR 100 +-1% .125W TF TC=O+-100	19701	SFR25H
A17R56	0698-3157	3	1	RESISTOR 19.6K 1% .125W TF TC=O+-100	19701	SFR25H
A17R57	0757-0438	3	1	RESISTOR 5.11K +-1% .125W TF TC=O+-100	19701	SFR25H
A17R58	0698-3634	1	1	RESISTOR 470 5% 2W MO TC=O+-200	11502	GS-3
A17R59	0757-045s	a	1	RESISTOR 56.21: +-1% .125W TF TC=O+-100	19701	SFR25H
A17R60	0757-0438	3	1	RESISTOR 5.11K +-1% .125W TF TC=O+-100	19701	SFR25H
A17R63	0757-0346	2	1	RESISTOR 10 +-1% .125W TF TC=O+-100	91637	CMF-55-1, T-l
A17R64	0698-3444	1	1	RESISTOR 316 1% .125W TF TC=O+-100	19701	SFR25H
A17R65	0757-0280	3	1	RESISTOR 1K +-1% .125W TF TC=O+-100	19701	SFR25H
A17R66	0757-045s	a	1	RESISTOR 56.2K +-1% .125W TF TC=O+-100	19701	SFR25H
A17R67	0757-0438	3	1	RESISTOR 5.11K +-1% .125W TF TC=O+-100	19701	SFR25H
A17R68	0757-0280	3	1	RESISTOR 1K +-1% .125W TF TC=O+-100	19701	SFR25H
A17R69	0757-0416	7	1	RESISTOR 511 +-1% .125W TF TC=O+-100	19701	SFR25H
A17RT1	0698-3155	1	1	RESISTOR 4.64K 1% .125W TF TC=O+-100	19701	SFR25H
A17TP1	0837-0126	6	1	THERMISTOR DISC 1K-OHM TC=-4.4%/C-DEG		STD-0163
A17TP2	1251-0600	0	1	CONNECTOR-SGL CONT PIN 1.14-MM-BSC-SZ SQ	27264	16-06-0034
A17TP3	1251-0600	0	1	CONNECTOR-SGL CONT PIN 1.14-MM-BSC-SZ SQ	27264	16-06-0034
A17TP4	1251-0600	0	1	CONNECTOR-SGL CONT PIN 1.14-MM-BSC-SZ SQ	27264	16-06-0034
A17TP5	1251-0600	0	1	CONNECTOR-SGL CONT PIN 1.14-MM-BSC-SZ SQ	27264	16-06-0034
A17TP6	1251-0600	0	1	CONNECTOR-SGL CONT PIN 1.14-MM-BSC-SZ SQ	27264	16-06-0034
A17TP7	1251-0600	0	1	CONNECTOR-SGL CONT PIN 1.14-MM-BSC-SZ SQ	27264	16-06-0034
A17TP8	1251-0600	0	1	CONNECTOR-SGL CONT PIN 1.14-MM-BSC-SZ SQ	27264	16-06-0034
A17TP9	1251-0600	0	1	CONNECTOR-SGL CONT PIN 1.14-MM-BSC-SZ SQ	27264	16-06-0034
A17U1	1820-0223	0	1	IC OP AMP GP TO-99 PKG	27014	LM301AH
A17U2	1820-0223	0	1	IC OP AMP GP TO-99 PKG	27014	LM301AH
A17U3	1826-0161	7	1	IC OP AMP GP QUAD 14-DIP-P PKG	27014	LM324N
A17VR1	1902-3171	7	1	DIODE-ZNR 11V 5% DO-35 PD=.4W TC=+.062%	04713	
A17VR2	1902-0686	3	1	DIODE-ZNR 6.2V 2% DO-7 PD=.4W TC=+.002%	04713	1N825
A17VR3	1902-3252	5	1	DIODE-ZNR 22.6V 2% DO-35 PD=.4W	04713	
A17VR4	1902-0049	2	1	DIODE-ZNR 6.19V 5% DO-35 PD=.4W	04713	

**Indicates factory-selected value*

HP Part Number 85660-60174

Al7 Positive Regulator

Reference Designation	HP Part Number	C D	Qty	Description	Mfr Code	Mfr Part Number
A17VR5	1902-0686	3	1	DIODE-ZNR 6.2V 2% DO-7 PD=.4W TC=+.002%	04713	1N825
A17VR7	1902-3203	6	1	DIODE-ZNR 14.7V 5% DO-35 PD=.4W	04713	
A17VR8	1902-3172	8	1	DIODE-ZNR 11V 2% DO-35 PD=.4W TC=+.062%	04713	
A17VR9	1902-0049	2	1	DIODE-ZNR 6.19V 5% DO-35 PD=.4W	04713	

**Indicates facto y-selected value*

HP Part Number 85660-60275

Al7 Positive Regulator

Reference Designation	HP Part Number	C D	Qty	Description	Mfr Code	Mfr Part Number
Al7	85660-60275	9	1	BOARD ASSEMBLY, POSITIVE REGULATOR (SERIAL PREFIXES: 2607A-2729A)	28480	85660-60275
A17C1	0180-2205	3	1	CAPACITOR-FXO .33UF+-10% 35VDC TA	56289	150D334X9035A2-DYS
A17C2	0180-0116	1	1	CAPACITOR-FXD 6.8UF+-10% 35VDC TA	56289	150D685X9035B2-DYS
A17C3	0180-1746	5	1	CAPACITOR-FXD 15UF+-10% 20VDC TA	56289	150D156X9020B2-DYS
A17C4	0160-5271	7	1	CAPACITOR-FXD 30PF +-5% 100VDC CER 0+-30	04222	SA102A300JAAH
A17C5	0180-0228	6	1	CAPACITOR-FXD 22UF+-10% 15VDC TA	56289	1500226X901562-DYS
A17C6	(1180-0116	1	1	CAPACITOR-FXD 6.8UF+-10% 35VDC TA	56289	150D685X9035B2-DYS
A17C7	0160-4831	3	1	CAPACITOR-FXD 4700PF +-lo% 100VDC CER	04222	SA101C472KAAH
A17C8	0160-4834	6	1	CAPACITOR-FXD .047UF +-lo% 100VDC CER	04222	SA301C473KAAH
A17C9	0160-4834	6	1	CAPACITOR-FXD .047UF +-lo% 100VDC CER	04222	SA301C473KAAH
A17C10	0160-5271	7	1	CAPACITOR-FXD 30PF +-5% 100VDC CER 0+-30	04222	SA102A300JAAH
A17C11	0180-0197	a	1	CAPACITOR-FXD 2.2UF+-10% 20VDC TA	56289	150D225X9020A2-DYS
A17C12	0180-0228	6	1	CAPACITOR-FXD 22UF+-10% 15VDC TA	56289	150D226X9015B2-DYS
A17C13	0160-4892	6	1	CAP-FXD 1uF 25 V	56289	2C37Z5U105M025C
A17C14	0180-0197	a	1	CAPACITOR-FXD 2.2UF+-10% 20VDC TA	56289	150D225X9020A2-DYS
A17C15	0180-0197	a	1	CAPACITOR-FXD 2.2UF+-10% 20VDC TA	56289	150D225X9020A2-DYS
A17C16	0160-4832	4	1	CAPACITOR-FXD .01UF +-10% 100VDC CER	04222	SA101C103KAAH
A17CR1	1884-0018	5	1	THYRISTOR-SCR 2N4186 VRRM=200	04713	2N4186
A17CR2	1884-0046	9	1	THYRISTOR-SCR VRRM=50		C230F
A17CR3	1901-0743	1	1	DIODE-PWR RECT IN4004 400V 1A DO-41	71744	1N4004
A17CR4	1.SOl-0033	2	1	DIODE-GEN PRP iaov 200MA Do-35	9N171	1N645
A17CR5	1901-0033	2	1	DIODE-GEN PRP laov 200MA Do-35	9N171	1N645
A17CR6	1901-0033	2	1	DIODE-GEN PRP laov 200MA Do-35	9N171	1N645
A17CR7	1884-0018	5	1	THYRISTOR-SCR 2N4186 VRRM=200	04713	2N4186
A17CR11	1901-0033	2	1	DIODE-GEN PRP iaov 200MA DO-35	9N171	1N645
A17CR12	1901-0033	2	1	DIODE-GEN PRP iaov 200MA Do-35	9N171	1N645
A17DS1	1990-0487	7	1	LED-LAMP LUM-INT=2MCD BVR=5V	28480	HLMP-1401
A17DS2	1990-0487	7	1	LED-LAMP LUM-INT=2MCD BVR=5V	28480	HLMP-1401
A17DS3	1990-0404	a	1	LED-LAMP LUM-INT=500UCD IF=50MA-MAX	28480	HLMP-1000
A17DS4	1990-0487	7	1	LED-LAMP LUM-INT=2MCD BVR=5V	28480	HLMP-1401
A17F1	2110-0001	a	1	FUSE 1A 250V NTD FE UL	75915	312 001
A17F2	2'110-0003	0	1	FUSE 3A 250V NTD FE UL	75915	312 003
A17F3	2110-0056	3	1	FUSE 6A 250V NTD FE UL	75915	312 006
A17MP1				NOT ASSIGNED		
A17MP3	0520-0128	7	2	SCREW-MACH 2-56 .25-IN-LG PAN-HD-POZI	77250	
A17MP4	2110-0726	4	6	FUSEHOLDER-CLP-TYP.25D-FUSE	13060	1115-0597T
A17MP5	2190-0014	1	2	WASHER-LK INTL T NO. 2 .089-IN-ID	78189	1902-00-00-2580
A17MP6	2190-0027	6	1	WASHER-LK INTL T 1/4 IN .256-IN-ID	78189	1914-00
A17MP7	2950-0051	8	1	NUT-HEX-DBL-CHAM 1/4-28-THD .094-IN-THK	73743	
A17MP8	5000-9043	6	1	EXTRACTOR PIN	28480	5000-9043
A17MP9	5040-6843	2	1	PC BOARD EXTRACTOR	28480	5040-6843
A17MP10	8151-0013	4	1	WIRE 22AWG 1X22	92194	298
A17MP11	86701-20036	a	1	DIODE MOUNTING BLOCK	28480	86701-20036
A17MP12	1200-0081	4	1	INSULATOR-FLG-BSHG NYLON	26365	974 307
A17MP13	1205-0565	9	1	HEAT SINK SGL PLSTC-PWR-CS	13103	6079B-SE-6
A17MP14	0380-0175	6	1	STANDOFF-HEX .375-IN-LG 6-32-THD	83330	2321

**Indicates factory-selected value*

HP Part Number 85660-60275

Al7 Positive Regulator

Reference Designation	HP Part Number	C. D	Qty	Description	Mfr Code	Mfr Part Number
A17MP15	2190-0018	5	1	WASHER-LK HLCL NO. 6 .141-IN-ID	73734	
A17Q1	1853-0012	4	1	TRANSISTOR PNP 2N2904A SI TO-39 PD=600MW	04713	2N2904A
A17Q2	1853-0451	5	1	TRANSISTOR PNP 2N3799 SI TO-18 PD=360MW	04713	
A17Q3	1854-0404	0	1	TRANSISTOR NPN SI TO-18 PD=360MW	04713	
A17Q4	1854-0456	2	1	TRANSISTOR NPN SI PD=65W FT=3MHZ	01295	TIP41A
A17Q5	1854-0404	0	1	TRANSISTOR NPN SI TO-18 PD=360MW	04713	
A17Q6	1854-0404	0	1	TRANSISTOR NPN SI TO-18 PD=360MW	04713	
A17Q7	1853-0281	9	1	TRANSISTOR PNP 2N2907A SI TO-18 PD=400MW	04713	2N2907A
A17Q8	1854-0404	0	1	TRANSISTOR NPN SI TO-18 PD=360MW	04713	
A17Q9	1853-0281	9	1	TRANSISTOR PNP 2N2907A SI TO-18 PD=400MW	04713	2N2907A
A17Q10	1854-0404	0	1	TRANSISTOR NPN SI TO-18 PD=360MW	04713	
A17Q11	1854-0404	0	1	TRANSISTOR NPN SI TO-18 PD=360MW	04713	
A17Q12	1854-0404	0	1	TRANSISTOR NPN SI TO-18 PD=360MW	04713	
A17Q13	1854-0477	7	1	TRANSISTOR NPN 2N2222A SI TO-18 PD=500MW	04713	2N2222A
A17R1	0757-0443	0	1	RESISTOR 11K +-1% .125W TF TC=O+-100	19701	SFR25H
A17R2	0757-0401	0	1	RESISTOR 100 +-1% .125W TF TC=O+-100	19701	SFR25H
A17R3	0811-1659	8	1	RESISTOR .27 +-5% 2W PWI TC=O+-800	11502	SPH
A17R4	0757-041s	0	1	RESISTOR 681 +-1% .125W TF TC=O+-100	19701	SFR25H
A17R5	0757-0443	0	1	RESISTOR 11K +-1% .125W TF TC=O+-100	19701	SFR25H
A17R6	0757-0394	0	1	RESISTOR 51.1 +-1% .125W TF TC=O+-100	19701	SFR25H
A17R7	0698-3150	8	1	RESISTOR 2.37K 1% .125W TF TC=O+-100	19701	SFR25H
A17R8	0698-3442	9	1	RESISTOR 237 1% .125W TF TC=O+-100	19701	SFR25H
A17R9	0698-8465	8	1	RESISTOR 7.15K +-0.5% .125W TF TC=O+-50	19701	5033R
A17R10	0698-6835	0	1	RESISTOR 3.16K +-0.5% .125W TF TC=O+-50	19701	5033R
A17R11	0757-0280	3	1	RESISTOR 1K +-1% .125W TF TC=O+-100	19701	SFR25H
A17R12	0757-0278	9	1	RESISTOR 1.78K +-1% .125W TF TC=O+-100	19701	SFR25H
A17R13	0683-0275	9	1	RESISTOR 2.7 5% .25W CF TC=O-400	2M627	R-25J
A17R14	0698-3444	1	1	RESISTOR 316 1% .125W TF TC=O+-100	19701	SFR25H
A17R15	0757-0346	2	1	RESISTOR 10 +-1% .125W TF TC=O+-100	91637	CMF-55-1, T-l
A17R16	0757-0278	9	1	RESISTOR 1.78K +-1% .125W TF TC=O+-100	19701	SFR25H
A17R17	0698-3162	0	1	RESISTOR 46.4K 1% .125W TF TC=O+-100	19701	SFR25H
A17R18	0757-0442	9	1	RESISTOR 10K +-1% .125W TF TC=O+-100	19701	SFR25H
A17R19	0757-0438	3	1	RESISTOR 5.11K +-1% .125W TF TC=O+-100	19701	SFR25H
A17R20	0698-0083	8	1	RESISTOR 1.96K 1% .125W TF TC=O+-100	19701	SFR25H
A17R21	0757-0465	8	1	RESISTOR 100K +-1% .125W TF TC=O+-100	19701	SFR25H
A17R22	0757-0443	0	1	RESISTOR 11K +-1% .125W TF TC=O+-100	19701	SFR25H
A17R23	0757-0438		1	RESISTOR 5.11K +-1% .125W TF TC=O+-100	19701	SFR25H
A17R24	0757-039s	5	1	RESISTOR 82.5 +-1% .125W TF TC=O+-100	19701	SFR25H
A17R25	0757-0280	3	1	RESISTOR 1K +-1% .125W TF TC=O+-100	19701	SFR25H
A17R26	0757-0401	0	1	RESISTOR 100 +-1% .125W TF TC=O+-100	19701	SFR25H
A17R27	0811-1661	2	1	RESISTOR .39 +-5% 2W PWI TC=O+-800	11502	SPH
A17R28	0811-1661	2	1	RESISTOR .39 +-5% 2W PWI TC=O+-800	11502	SPH
A17R29	0811-1661	2	1	RESISTOR .39 +-5% 2W PWI TC=O+-800	11502	SPH
A17R30	0757-0419	0	1	RESISTOR 681 +-1% .125W TF TC=O+-100	19701	SFR25H
A17R31	0757-0420	3	1	RESISTOR 750 +-1% .125W TF TC=O+-100	19701	SFR25H
A17R32	0698-3154	0	1	RESISTOR 4.22K 1% .125W TF TC=O+-100	19701	SFR25H
A17R33	0757-0280	3	1	RESISTOR 1K +-1% .125W TF TC=O+-100	19701	SFR25H
A17R34	0698-8466	7	1	RESISTOR 942 +-0.5% .125W TF TC=O+-50	19701	5033R

**Indicates factory-selected value*

HP Part Number 85660-60275

Al7 Positive Regulator

Reference Designatior	HP Part Number	C D	Qty	Description	Mfr Code	Mfr Part Number
A17R35	0698-6835	0	1	RESISTOR 3.16K +-0.5% .125W TF TC=O+-50	19701	5033R
A17R36	0698-6835	0	1	RESISTOR 3.16K +-0.5% .125W TF TC=O+-50	19701	5033R
A17R37	0683-0275	9	1	RESISTOR 2.7 5% .25W CF TC=O-400	2M627	R-25J
A17R38	0698-3444	1	1	RESISTOR 316 1% .125W TF TC=O+-100	19701	SFR25H
A17R39	0757-0401	0	1	RESISTOR 100 +-1% .125W TF TC=O+-100	19701	SFR25H
A17R40	0757-0346	2	1	RESISTOR 10 +-1% .125W TF TC=O+-100	91637	CMF-55-1, T-l
A17R41	0698-3150	6	1	RESISTOR 2.37K 1% .125W TF TC=O+-100	19701	SFR25H
A17R42	0757-0418	9	1	RESISTOR 619 +-1% .125W TF TC=O+-100	19701	SFR25H
A17R43	0698-3156	2	1	RESISTOR 14.7K 1% .125W TF TC=O+-100	19701	SFR25H
A17R44	0757-0459	8	1	RESISTOR 56.2K +-1% .125W TF TC=O+-100	19701	SFR25H
A17R45	0698-3150	6	1	RESISTOR 2.37K 1% .125W TF TC=O+-100	19701	SFR25H
A17R46	0698-3150	6	1	RESISTOR 2.37K 1% .125W TF TC=O+-100	19701	SFR25H
A17R47	0757-0442	9	1	RESISTOR 10K +-1% .125W TF TC=O+-100	19701	SFR25H
A17R48	0698-3444	1	1	RESISTOR 316 1% .125W TF TC=O+-100	19701	SFR25H
A17R49	0698-8464	5	1	RESISTOR 12.6K +-0.5% .125W TF TC=O+-50	19701	5033R
A17R50	2100-3095	5	1	RESISTOR-TRMR 200 10% TKF SIDE-ADJ 17-TR	73138	89PR200
A17R51	0757-0280	3	1	RESISTOR 1K +-1% .125W TF TC=O+-100	19701	SFR25H
A17R52	0698-0084	9	1	RESISTOR 2.15K 1% .125W TF TC=O+-100	19701	SFR25H
A17R53	0698-4405	6	1	RESISTOR 107 +-1% .125W TF TC=O+-100	91637	CMF-55-1. T-l
A17R54	0757-0280	3	1	RESISTOR 1K +-1% .125W TF TC=O+-100	19701	SFR25H
A17R55	0757-0401	0	1	RESISTOR 100 +-1% .125W TF TC=O+-100	19701	SFR25H
A17R56	0698-3157	3	1	RESISTOR 19.6K 1% .125W TF TC=O+-100	19701	SFR25H
A17R57	0757-0438	3	1	RESISTOR 5.11K +-1% .125W TF TC=O+-100	19701	SFR25H
A17R58	0698-3634	1	1	RESISTOR 470 5% 2W MO TC=O+-200	11502	GS-3
A17R59	0757-0459	8	1	RESISTOR 56.2K +-1% .125W TF TC=O+-100	19701	SFR25H
A17R60	0757-0438	3	1	RESISTOR 5.11K +-1% .125W TF TC=O+-100	19701	SFR25H
A17R62	0757-0346	2	1	RESISTOR 10 +-1% .125W TF TC=O+-100	91637	CMF-55-1, T-l
A17R63	0698-3444	1	1	RESISTOR 316 1% .125W TF TC=O+-100	19701	SFR25H
A17R64	0757-0280	3	1	RESISTOR 1K +-1% .125W TF TC=O+-100	19701	SFR25H
A17R65	0757-0459	8	1	RESISTOR 56.2K +-1% .125W TF TC=O+-100	19701	SFR25H
A17R66	0757-0438	3	1	RESISTOR 5.11K +-1% .125W TF TC=O+-100	19701	SFR25H
A17R67	0757-0280	3	1	RESISTOR 1K +-1% .125W TF TC=O+-100	19701	SFR25H
A17R68	0757-0416	7	1	RESISTOR 511 +-1% .125W TF TC=O+-100	19701	SFR25H
A17R69	0698-3155	1	1	RESISTOR 4.64K 1% .125W TF TC=O+-100	19701	SFR25H
A17RT1	0837-0126	6	1	THERMISTOR DISC 1K-OHM TC=-4.4%/C-DEG		STD-0163
A17TP1	1251-0600	0	1	CONNECTOR-SGL CDNT PIN 1.14-MM-BSC-SZ SQ	27264	16-06-0034
A17TP2	1251-0600	0	1	CONNECTOR-SGL CONT PIN 1.14-MM-BSC-SZ SQ	27264	16-06-0034
A17TP3	1251-0600	0	1	CONNECTOR-SGL CONT PIN 1.14-MM-BSC-SZ SQ	27264	16-06-0034
A17TP4	1251-0600	0	1	"ONNECTOR-SGL CONT PIN 1.14-MM-BSC-SZ SQ	27264	16-06-0034
A17TP5	1251-0600	0	1	CONNECTOR-SGL CONT PIN 1.14-MM-BSC-SZ SQ	27264	16-06-0034
A17TP6	1251-0600	0	1	CONNECTOR-SGL CONT PIN 1.14-MM-BSC-SZ SQ	27264	16-06-0034
A17TP7	1251-0600	0	1	CONNECTOR-SGL CONT PIN 1.14-MM-BSC-SZ SQ	27264	16-06-0034
A17TP8	1251-0600	0	1	CONNECTOR-SGL CONT PIN 1.14-MM-BSC-SZ SQ	27264	16-06-0034
A17TP9	1251-0600	0	1	CONNECTOR-SGL CONT PIN 1.14-MM-BSC-SZ SQ	27264	16-06-0034
A17U1	1820-0223	0	1	IC OP AMP GP TO-99 PKG	27014	LM301AH
A17U2	1820-0223	0	1	IC OP AMP GP TO-99 PKG	27014	LM301AH
A17U3	1826-0161	7	1	IC OP AMP GP QUAD 14-DIP-P PKG	27014	LM324N

**Indicates factory-selected value*

HP Part Number 85660-60275

Al7 Positive Regulator

Reference Designation	HP Part Number	CD	Qty	Description	Mfr Code	Mfr Part Number
A17VR1	1902-3171	7	1	DIODE-ZNR 11V 5% DO-35 PD=.4W TC=+.062%	04713	
A17VR2	1902-0686	3	1	DIODE-ZNR 6.2V 2% DO-7 PD=.4W TC=+.002%	04713	1N825
A17VR3	1902-3252	5	1	DIODE-ZNR 22.6V 2% DO-35 PD=.4W	04713	
A17VR4	1902-0049	2	1	DIODE-ZNR 6.19V 5% DO-35 PD=.4W	04713	
A17VR5	1902-0686	3	1	DIODE-ZNR 6.2V 2% DO-7 PD=.4W TC=+.002%	04713	1N825
A17VR7	1902-3203	6	1	DIODE-ZNR 14.7V 5% DO-35 PD=.4W	04713	
A17VR8	1902-3172	8	1	DIODE-ZNR 11V 2% DO-35 PD=.4W TC=+.062%	04713	
A17VR9	1902-0049	2	1	DIODE-ZNR 6.19V 5% DO-35 PD=.4W	04713	

**Indicates factory-selected value*

HP Part Number 85660-60323

A17 Positive Regulator

Reference Designation	HP Part Number	CD	Qty	Description	Mfr Code	Mfr Part Number
A17	85660-60323	8	1	BOARD ASSEMBLY, POSITIVE REGULATOR (SERIAL PREFIX: 2747A)	28480	85660-60323
A17C1	0180-2205	3	1	CAPACITOR-FXD .33UF+-10% 35VDC TA	56289	150D334X9035A2-DYS
A17C3	0180-0116	5	1	CAPACITOR-FXD 6.8UF+-10% 35VDC TA	56289	150D685X9035B2-DYS
		1		CAPACITOR-FXD 15UF+-10% EOVDC TA	56289	150D156X9020B2-DYS
A17C4	0160-5271	7	1	CAPACITOR-FXD 30PF +-5% 100VDC CER 0+-30	04222	SA102A300JAAH
A17C5	0180-0228	6	1	CAPACITOR-FXD 22UF+-10% 15VDC TA	56289	150D226X9015B2-DYS
A17C7	0180-0116	1	1	CAPACITOR-FXD 6.8UF+-10% 35VDC TA	56289	150D685X9035B2-DYS
		3	1	CAPACITOR-FXD 4700PF +-10% 100VDC CER	04222	SA101C472KAAH
A17C8	0160-4834	6	1	CAPACITOR-FXD .047UF +-10% 100VDC CER	04222	SA301C473KAAH
A17C9	0160-4834	6	1	CAPACITOR-FXD .047UF +-10% 100VDC CER	04222	SA301C473KAAH
A17C10	0160-5271	7	1	CAPACITOR-FXD 30PF +-5% 100VDC CER 0+-30	04222	SA102A300JAAH
A17C11	0180-0197	8	1	CAPACITOR-FXD 2.2UF+-10% EOVDC TA	56289	150D225X9020A2-DYS
A17C13	0180-0228	6	1	CAPACITOR-FXD 22UF+-10% 15VDC TA	56289	150D226X9015B2-DYS
A17C14	0180-0197		1	CAP-FXD 1uF 25 V	56289	2C37Z5U105M025C
A17C15	0180-0197	8	1	CAPACITOR-FXD 2.2UF+-10% 20VDC TA	56289	150D225X9020A2-DYS
		8	1	CAPACITOR-FXD 2.2UF+-10% EOVDC TA	56289	150D225X9020A2-DYS
A17C16	0160-4832	4	1	CAPACITOR-FXO .01UF +-10% 100VDC CER	04222	SA101C103KAAH
A17CR1	1884-0018	5	1	THYRISTOR-SCR 2N4186 VRRM=200	04713	2N4186
A17CR2	1884-0046	9	1	THYRISTOR-SCR VRRM=50		C230F
A17CR3	1901-0743	1	1	DIODE-PWR RECT 1N4004 400V 1A DO-41	71744	IN4004
A17CR4	1901-0033	2	1	DIODE-GEN PRP 180V 200MA DO-35	9N171	1N645
A17CR5	1901-0033	2	1	DIODE-GEN PRP 180V 200MA DO-35	9N171	1N645
A17CR6	1901-0033	2	1	DIODE-GEN PRP 180V 200MA DO-35	9N171	IN645
A17CR7	1884-0018	5	1	THYRISTOR-SCR 214186 VRRM=200	04713	2N4186
A17CR11	1901-0033	2	1	DIODE-GEN PRP 180V 200MA DO-35	9N171	1N645
A17CR12	1901-0033	2	1	DIODE-GEN PRP 180V 200MA DO-35	9N171	1N645
A17DS2	1990-0487	7	1	LED-LAMP LUM-INT=2MCD BVR=5V	28480	HLMP-1401
A17DS3	1990-0404	8	1	LED-LAMP LUM-INT=2MCD BVR=5V	28480	HLMP-1401
		1		LED-LAMP LUM-INT=500UCD IF=50MA-MAX	28480	HLMP-1000
A17F14	2110-0001	5	1	LED-LAMP LUM-INT=2MCD BVR=5V	28480	HLMP-1401
		8	1	FUSE 1A 250V NTD FE UL	75915	312 001
A17F2	2110-0003	0	1	FUSE 3A 250V NTD FE UL	75915	312 003
A17F3	2110-0056	3	1	FUSE 6A 250V NTD FE UL	75915	312 006
A17MP1				NOT ASSIGNED		
A17MP3	0520-0128	7	2	SCREW-MACH 2-56 .25-IN-LG PAN-HD-POZI	77250	
A17MP4	2110-0726	4	6	FUSEHOLDER-CLP-TYP.25D-FUSE	13060	1115-0597T
A17MP6	2190-0014	1	2	WASHER-LK INTL T NO. 2 .089-IN-ID	78189	1902-00-00-2580
	2190-0027	6	1	WASHER-LK INTL T 1/4 IN .256-IN-ID	78189	1914-00
A17MP7	2950-0051	8	1	NUT-HEX-DBL-CHAM 1/4-28-THD .094-IN-THK	73743	
A17MP8	5000-9043	6	1	EXTRACTOR PIN	28480	5000-9043
A17MP9	5040-6843	2	1	PC BOARD EXTRACTOR	28480	5040-6843
A17MP10	8151-0013	4	1	WIRE 22AWG 1X22	92194	298
A17MP12	86701-20036	8	1	DIODE MOUNTING BLOCK	28480	86701-20036
A17MP13	1200-0681	4	10	INSULATOR-FLG-BSHG NYLON	26365	974 307
A17MP14	1205-0565	9	1	HEAT SINK SGL PLSTC-PWR-CS	13103	6079B-SE-6
	0380-0175	1	6	STANDOFF-HEX .375-IN-LG 6-32-THD	83330	2321

**Indicates factoy-selected value*

HP Part Number 85660-60323

Al7 Positive Regulator

Reference Designation	HP Part Number	C D	Qty	Description	Mfr Code	Mfr Part Number
A17MP15	2190-0018	5	1	WASHER-LK HLCL NO. 6 .141-IN-ID	73734	
A17Q1	1853-0012	4	1	TRANSISTOR PNP 2N2904A SI TO-39 PD=600MW	04713	2N2904A
A17Q2	1853-0451	5	1	TRANSISTOR PNP 2N3799 SI TO-18 PD=360MW	04713	
A17Q3	1854-0404	0	1	TRANSISTOR NPN SI TO-18 PD=360MW	04713	
A17Q4	1854-0456	2	1	TRANSISTOR NPN SI PD=65W FT=3MHZ	01295	TIP41A
A17Q5	1854-0404	0	1	TRANSISTOR NPN SI TO-18 PD=360MW	04713	
A17Q6	1854-0404	0	1	TRANSISTOR NPN SI TO-18 PD=360MW	04713	
A17Q7	1853-0281	9	1	TRANSISTOR PNP 2N2907A SI TO-18 PD=400MW	04713	2N2907A
A17Q8	1854-0404	0	1	TRANSISTOR NPN SI TO-18 PD=360MW	04713	
A17Q9	1853-0281	9	1	TRANSISTOR PNP 2N2907A SI TO-18 PD=400MW	04713	2N2907A
A17Q10	1854-0404	0	1	TRANSISTOR NPN SI TO-18 PD=360MW	04713	
A17Q11	1854-0404	0	1	TRANSISTOR NPN SI TO-18 PD=360MW	04713	
A17Q12	1854-0404	0	1	TRANSISTOR NPN SI TO-18 PD=360MW	04713	
A17Q13	1854-0477	7	1	TRANSISTOR NPN 2N2222A SI TO-18 PD=500MW	04713	2N2222A
A17R1	0757-0443	0	1	RESISTOR 11K +-1% .125W TF TC=O+-100	19701	SFR25H
A17R2	0757-0401	0	1	RESISTOR 100 +-1% .125W TF TC=O+-100	19701	SFR25H
A17R3	0811-1659	8	1	RESISTOR .27 +-5% 2W PWI TC=O+-800	11502	SPH
A17R4	0757-0419	0	1	RESISTOR 681 +-1% .125W TF TC=O+-100	19701	SFR25H
A17R5	0757-0443	0	1	RESISTOR 11K +-1% .125W TF TC=O+-100	19701	SFR25H
A17R6	0757-0394	0	1	RESISTOR 51.1 +-1% .125W TF TC=O+-100	19701	SFR25H
A17R7	0698-3150	6	1	RESISTOR 2.37K 1% .125W TF TC=O+-100	19701	SFR25H
A17R8	0698-3442	9	1	RESISTOR 237 1% .125W TF TC=O+-100	19701	SFR25H
A17R9	0698-8465	6	1	RESISTOR 7.15K +-0.5% .125W TF TC=O+-50	19701	5033R
A17R10	0698-6835	0	1	RESISTOR 3.16K +-0.5% .125W TF TC=O+-50	19701	5033R
A17R11	0757-0280	3	1	RESISTOR 1K +-1% .125W TF TC=O+-100	19701	SFR25H
A17R12	0757-0278	9	1	RESISTOR 1.78K +-1% .125W TF TC=O+-100	19701	SFR25H
A17R13	0683-0275	9	1	RESISTOR 2.7 5% .25W CF TC=0-400	2M627	R-25J
A17R14	0698-3444	1	1	RESISTOR 316 1% .125W TF TC=O+-100	19701	SFR25H
A17R15	0757-0346	2	1	RESISTOR 10 +-1% .125W TF TC=O+-100	91637	CMF-55-1. T-1
A17R16	0757-0278	9	1	RESISTOR 1.78K +-1% .125W TF TC=O+-100	19701	SFR25H
A17R17	0698-3162	0	1	RESISTOR 46.41: 1% .125W TF TC=O+-100	19701	SFR25H
A17R18	0757-0442	9	1	RESISTOR 10K +-1% .125W TF TC=O+-100	19701	SFR25H
A17R19	0757-0438	3	1	RESISTOR 5.11K +-1% .125W TF TC=O+-100	19701	SFR25H
A17R20	0698-0083	8	1	RESISTOR 1.96K 1% .125W TF TC=O+-100	19701	SFR25H
A17R21	0757-0465	6	1	RESISTOR 100K +-1% .125W TF TC=O+-100	19701	SFR25H
A17R22	0757-0443	0	1	RESISTOR 11K +-1% .125W TF TC=O+-100	19701	SFR25H
A17R23	0757-0438	3	1	RESISTOR 5.11K +-1% .125W TF TC=O+-100	19701	SFR25H
A17R24	0757-0399	5	1	RESISTOR 82.5 +-1% .125W TF TC=O+-100	19701	SFR25H
A17R25	0757-0280	3	1	RESISTOR 1K +-1% .125W TF TC=O+-100	19701	SFR25H
A17R26	0757-0401	0	1	RESISTOR 100 +-1% .125W TF TC=O+-100	19701	SFR25H
A17R27	0811-1661	2	1	RESISTOR .39 +-5% 2W PWI TC=O+-800	11502	SPH
A17R28	0811-1661	2	1	RESISTOR .39 +-5% 2W PWI TC=O+-800	11502	SPH
A17R29	0811-1661	2	1	RESISTOR .39 +-5% 2W PWI TC=O+-800	11502	SPH
A17R30	0757-0419	0	1	RESISTOR 681 +-1% .125W TF TC=O+-100	19701	SFR25H
A17R31	0757-0420	3	1	RESISTOR 750 +-1% .125W TF TC=O+-100	19701	SFR25H
A17R32	0698-3154	0	1	RESISTOR 4.22K 1% .125W TF TC=O+-100	19701	SFR25H
A17R33	0757-0280	3	1	RESISTOR 1K +-1% .125W TF TC=O+-100	19701	SFR25H
A17R34	0698-8466	7	1	RESISTOR 942 +-0.5% .125W TF TC=O+-50	19701	5033R

**Indicates factory-selected value*

HP Part Number 85660-60323

Al7 Positive Regulator

Reference Designation	HP Part Number	CD	Qty	Description	Mfr Code	Mfr Part Number
A17R35	0698-6835	0	1	RESISTOR 3.16K +-0.5% .125W TF TC=O+-50	19701	5033R
A17R36	0698-6835	0	1	RESISTOR 3.16K +-0.5% .125W TF TC=O+-50	19701	5033R
A17R37	0683-0275	9	1	RESISTOR 2.7 5% .25W CF TC=O-400	2M627	R-25J
A17R38	0698-3444	1	1	RESISTOR 316 1% .125W TF TC=O+-100	19701	SFR25H
A17R39	0757-0401	0	1	RESISTOR 100 +-1% .125W TF TC=O+-100	19701	SFR25H
A17R40	0757-0346	2	1	RESISTOR 10 +-1% .125W TF TC=O+-100	91637	CMF-55-1, T-l
A17R41	0698-3150	6	1	RESISTOR 2.37K 1% .125W TF TC=O+-100	19701	SFR25H
A17R42	0757-0418	9	1	RESISTOR 619 +-1% .125W TF TC=O+-100	19701	SFR25H
A17R43	0698-3156	2	1	RESISTOR 14.7K 1% .125W TF TC=O+-100	19701	SFR25H
A17R44	0757-0459	8	1	RESISTOR 56.2K +-1% .125W TF TC=O+-100	19701	SFR25H
A17R45	0698-3150	6	1	RESISTOR 2.37K 1% .125W TF TC=O+-100	19701	SFR25H
A17R46	0698-3150	6	1	RESISTOR 2.371: 1% .125W TF TC=O+-100	19701	SFR25H
A17R47	0757-0442	9	1	RESISTOR 10K +-1% .125W TF TC=O+-100	19701	SFR25H
A17R48	0698-3444	1	1	RESISTOR 316 1% .125W TF TC=O+-100	19701	SFR25H
A17R49	0698-8464	5	1	RESISTOR 12.6K +-0.5% .125W TF TC=O+-50	19701	5033R
A17R50	2100-3095	5	1	RESISTOR-TRMR 200 10% TKF SIDE-ADJ 17-TR	73138	89PR200
A17R51	0757-0280	3	1	RESISTOR 1K +-1% .125W TF TC=O+-100	19701	SFR25H
A17R52	0698-0084	9	1	RESISTOR 2.15K 1% .125W TF TC=O+-100	19701	SFR25H
A17R53	0698-4485	6	1	RESISTOR 107 +-1% .125W TF TC=O+-100	91637	CMF-55-l. T-l
A17R54	0757-0280	3	1	RESISTOR 1K +-1% .125W TF TC=O+-100	19701	SFR25H
A17R55	0757-0401	0	1	RESISTOR 100 +-1% .125W TF TC=O+-100	19701	SFR25H
A17R56	0698-3157	3	1	RESISTOR 19.6K 1% .125W TF TC=O+-100	19701	SFR25H
A17R57	0757-0438	3	1	RESISTOR 5.11K +-1% .125W TF TC=O+-100	19701	SFR25H
A17R58	0698-3634	1	1	RESISTOR 470 5% 2W MO TC=O+-200	11502	GS-3
A17R59	0757-0459	8	1	RESISTOR 56.2K +-1% .125W TF TC=O+-100	19701	SFR25H
A17R60	0757-0438	3	1	RESISTOR 5.11K +-1% .125W TF TC=O+-100	19701	SFR25H
A17R62	0757-0346	2	1	RESISTOR 10 +-1% .125W TF TC=O+-100	91637	CMF-55-l. T-l
A17R63	0698-3444	1	1	RESISTOR 316 1% .125W TF TC=O+-100	19701	SFR25H
A17R64	0757-0280	3	1	RESISTOR 1K +-1% .125W TF TC=O+-100	19701	SFR25H
A17R65	0757-0459	8	1	RESISTOR 56.2K +-1% .125W TF TC=O+-100	19701	SFR25H
A17R66	0757-0438	3	1	RESISTOR 5.11K +-1% .125W TF TC=O+-100	19701	SFR25H
A17R67	0757-0280	3	1	RESISTOR 1K +-1% .125W TF TC=O+-100	19701	SFR25H
A17R68	0757-0416	7	1	RESISTOR 511 +-1% .125W TF TC=O+-100	19701	SFR25H
A17R69	0698-3155	1	1	RESISTOR 4.64K 1% .125W TF TC=O+-100	19701	SFR25H
A17RT1	0837-0126	6	1	THERMISTOR DISC 1K-OHM TC=-4.4%/C-DEG		STD-0163
A17TP1	1251-0600	0	1	CONNECTOR-SGL CONT PIN 1.14-MM-BSC-SZ SQ	27264	16-06-0034
A17TP2	1251-0600	0	1	CONNECTOR-SGL CONT PIN 1.14-MM-BSC-SZ SQ	27264	16-06-0034
A17TP3	1251-0600	0	1	CONNECTOR-SGL CONT PIN 1.14-MM-BSC-SZ SQ	27264	16-06-0034
A17TP4	1251-0600	0	1	CONNECTOR-SGL CONT PIN 1.14-MM-BSC-SZ SQ	27264	16-06-0034
A17TP5	1251-0600	0	1	CONNECTOR-SGL CONT PIN 1.14-MM-BSC-SZ SQ	27264	16-06-0034
A17TP6	1251-0600	0	1	CONNECTOR-SGL CONT PIN 1.14-MM-BSC-SZ SQ	27264	16-06-0034
A17TP7	1251-0600	0	1	CONNECTOR-SGL CONT PIN 1.14-MM-BSC-SZ SQ	27264	16-06-0034
A17TP8	1251-0600	0	1	CONNECTOR-SGL CONT PIN 1.14-MM-BSC-SZ SQ	27264	16-06-0034
A17TP9	1251-0600	0	1	CONNECTOR-SGL CONT PIN 1.14-MM-BSC-SZ SQ	27264	16-06-0034
A17U1	1820-0223	0	1	IC OP AMP GP TO-99 PKG	27014	LM301AH
A17U2	1820-0223	0	1	IC OP AMP GP TO-99 PKG	27014	LM301AH
A17U3	1826-0161	7	1	IC OP AMP GP QUAD 14-DIP-P PKG	27014	LM324N

**Indicates factoy-selected value*

HP Part Number 85660-60323

Al7 Positive Regulator

Reference Designation	HP Part Number	C D	Qty	Description	Mfr Code	Mfr Part Number
A17VR1	1902-3171	7	1	DIODE-ZNR 11V 5% DO-35 PD=.4W TC=+.062%	0471:	
A17VR2	1902-0686	3	1	DIODE-ZNR 6.2V 2% DO-7 PD=.4W TC=+.002%	0471:	1N825
A17VR3	1902-3252	5	1	DIODE-ZNR 22.6V 2% DO-35 PD=.4W	0471:	
A17VR4	1902-0049	2	1	DIODE-ZNR 6.19V 5% DO-35 PD=.4W	0471:	
A17VR5	1902-0686	3	1	DIODE-ZNR 6.2V 2% DO-7 PD=.4W TC=+.002%	0471:	1N825
A17VR7	1902-3203	6	1	DIODE-ZNR 14.7V 5% DO-35 PD=.4W	04713	
A17VR8	1902-3172	8	1	DIODE-ZNR 11V 2% DO-35 PD=.4W TC=+.062%	04713	
A17VR9	1902-0049	2	1	DIODE-ZNR 6.19V 5% DO-35 PD=.4W	04713	

**Indicates factoy-selected value*

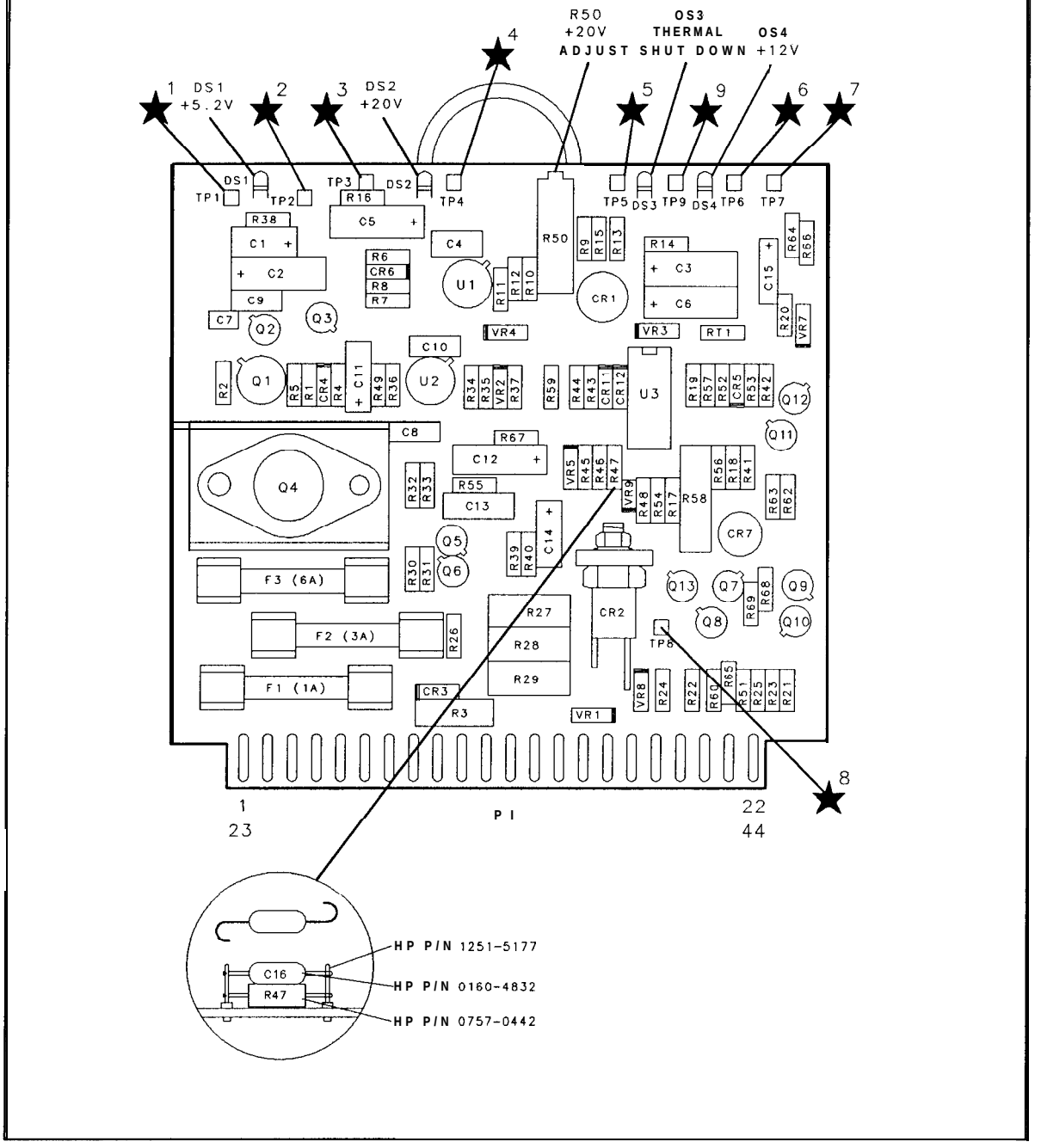

Al7 Positive Regulator Component Locations, 85660-60174

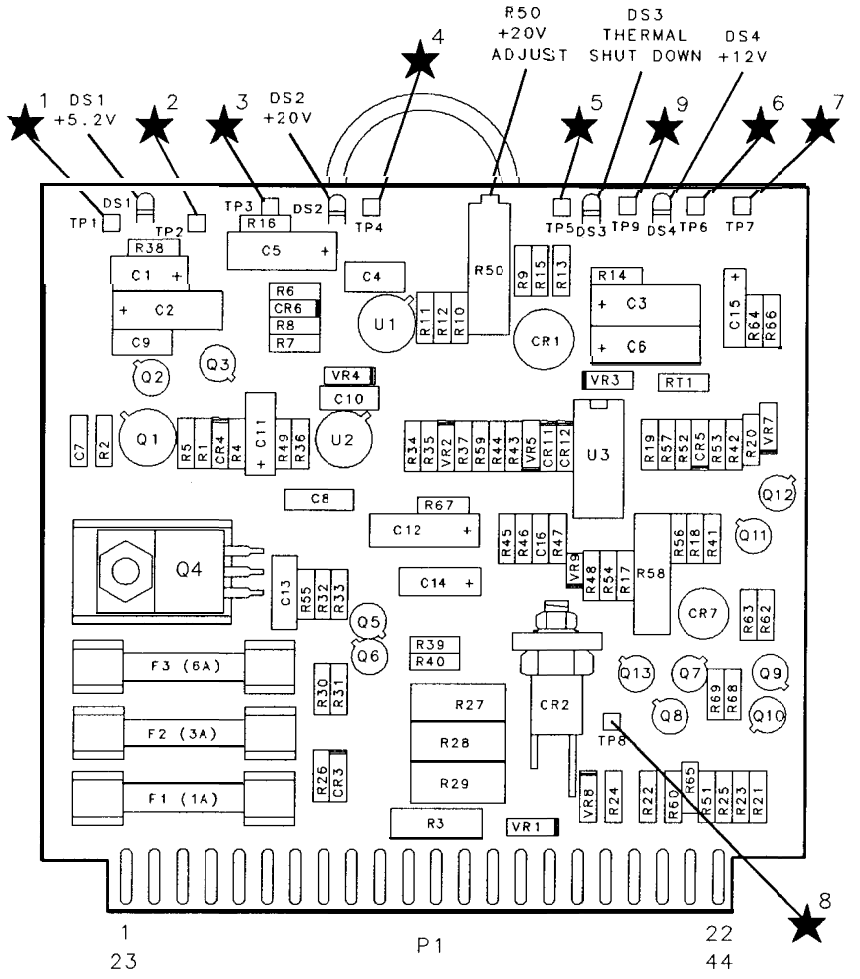

A17 Positive Regulator Component Locations, 85660-60275

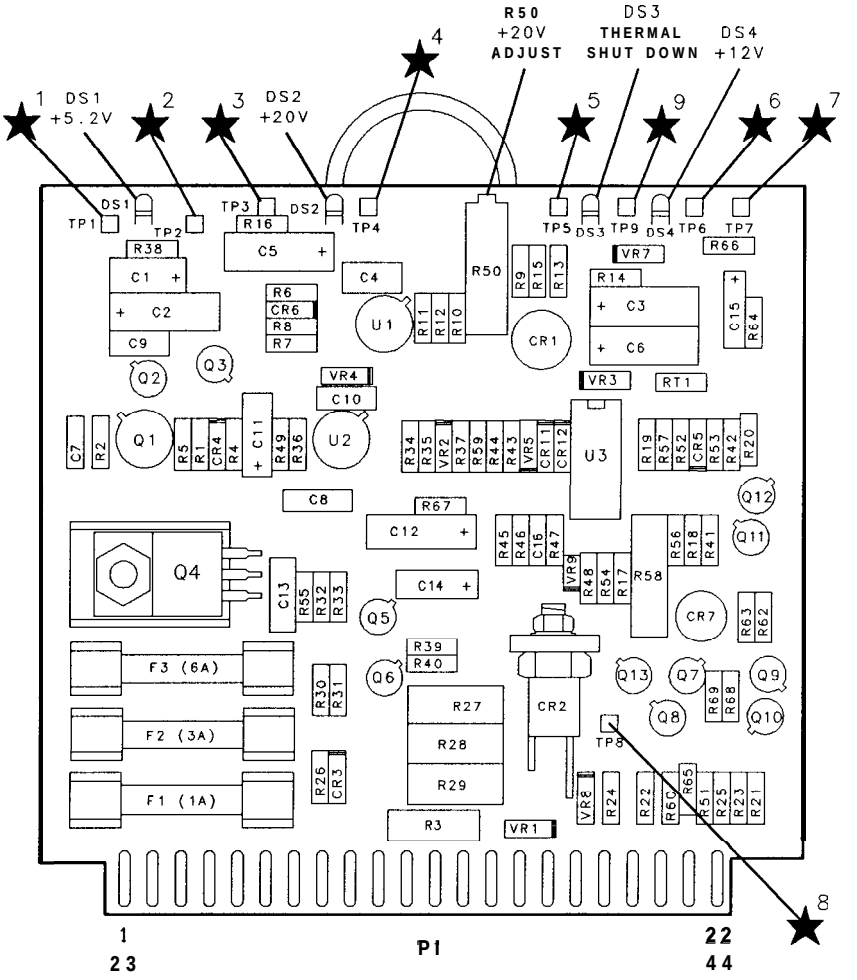

AI7 Positive Regulator Component Locations, 85660-60323

A17 POSITIVE REGULATOR
85660-60174
(SERIAL PREFIXES: 2410A-2532A)
85660-60275
(SERIAL PREFIXES: 2607A-2729A)
85660-60323
(SERIAL PREFIX: 2747A)

P1

PIN	SIGNAL	TO/FROM	FUNCTION BLOCK
1 23	+12V UNREG	A23U1-2	A
2 24	+29V TYP	A8P1-6,24	A
3 25	+29V TYP	A8P1-6,24	A
4 26	+20V UNREG	A23Q3	A
5 27	+20V BASE DRIVE	A23Q3	A
6 28	+20V EMITTER	A23Q3	A
7 29	+11V TYP	A8P1-10,28	C
8 30	+11V TYP	A8P1-10,28	C
9 31	+5.2V UNREG	A23Q4	C
10 32	+5.2V UNREG	A23Q4	C
11 33	+5V BASE DRIVE	A23Q4	C
12 34	+5V EMITTER	A23Q4	C
13 35	+5V EMITTER	A23Q4	C
14 36	+20V	SEE A8	A
15 37	GND		A
16 38	+5.2V	SEE A8	C
17 39	+5.2V	SEE A8	C
18 40	GND		A
19 41	+11.0V +20V SWITCHED	A23U1-1 A23J3-1	B J
20 42	+12V OUT	A23U1-3	B
21 43	-5.2V HPUP	A18P1-16,34 A15P2-32	B K
22 44	HSTD LSBY	A12P2-20 A5A1J1-3	J F

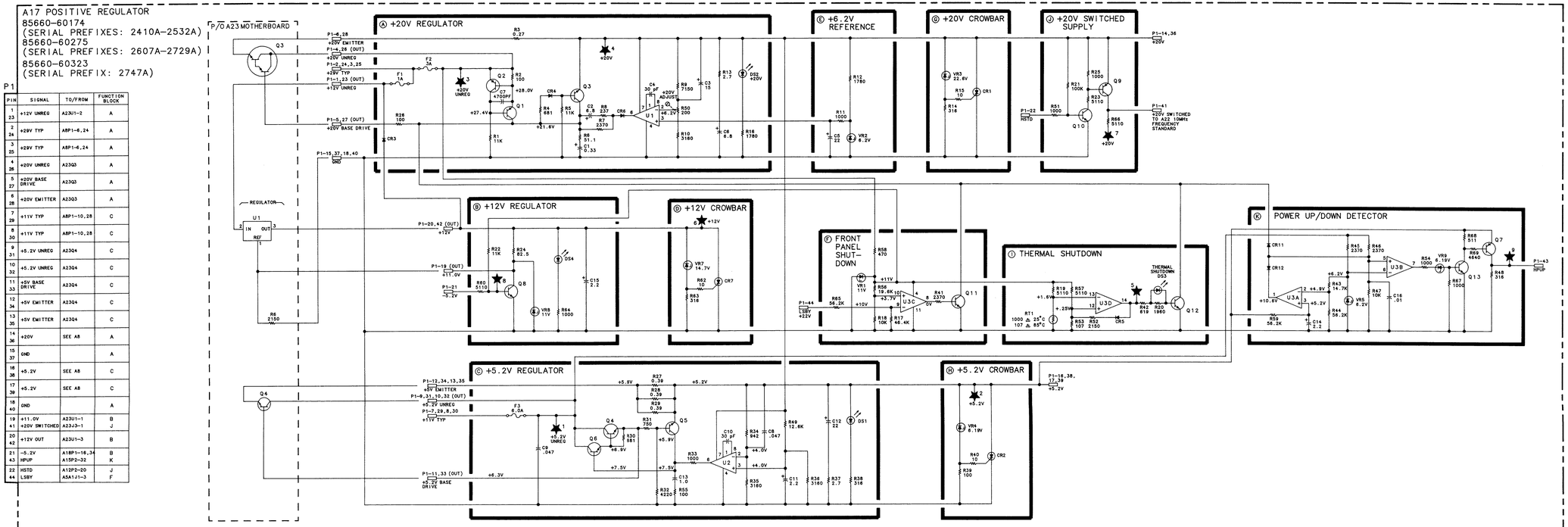

NOTES:

1. REFERENCE DESIGNATORS WITHIN THIS ASSEMBLY ARE ABBREVIATED. FOR COMPLETE REFERENCE DESIGNATION, PREFIX ABBREVIATION WITH ASSEMBLY DESIGNATION.
2. UNLESS OTHERWISE INDICATED: RESISTANCE IS IN OHMS (Ω), CAPACITANCE IS IN MICROFARADS (μF), INDUCTANCE IS IN MICROHENRIES (μH).
3. UNLESS OTHERWISE INDICATED: SIGNALS ENTER AT LEFT SIDE AND EXIT AT RIGHT SIDE OF FUNCTION BLOCKS.
4. MNEMONICS TABLE:

MNEMONIC	DESCRIPTION
HPUP	HIGH=POWER UP
HSTD	HIGH=10 MHZ STANDARD ON
LSBY	LOW=STANDBY

A18

A18 Negative Regulator, Circuit Description

Al8 Negative Regulator provides -5.2 V, -10 V, and -40 V regulated voltages to the instrument. All three supplies derive their reference from the +20 V supply on the Al7 Positive Regulator. The relationship of Al8 to A8 Rectifier, Al7 Positive Regulator, and A23 Motherboard is shown on the A8 schematic.

−10 V Regulator Ⓐ

The -10 V supply is referenced to the +20 V supply by a resistor divider consisting of R5, R6, and R7 connected between the two supplies. The voltage at the junction of R5 and R6 is nominally 0 V. Any error is amplified by U2 to drive the series-pass transistor A23Q1. The entire unregulated portion of the supply, including the rectifier diodes and filter capacitor, is floating; thus the collector of A23Q1 is typically i-15 V. Current-sensing resistors Rl and R23 are connected between the emitter of A23Q1 and ground. These resistors, along with R2, R3, CR1, and Q1, form a current foldback protection network.

Overvoltage protection is provided by the -10 V crowbar Ⓑ consisting of VR2 and CR26. Further protection is provided by fuse F3. LED DS2 indicates the presence of an output voltage.

−5.2 V Regulator Ⓒ

The -5.2 V supply is also referenced to the +20 V supply by a resistor divider consisting of R37, R38, and R39 connected between the two supplies. This supply is a double-regulated supply, as its input is in the regulated output from the -10 V supply. Error amplifier U1 drives the pass transistor Q2 via Q3. R32 and R33 are dropping resistors, so the power dissipation in Q2 is not excessive. R34, R12, R32, and Q4 provide current foldback protection. Further protection is provided by F1. Overvoltage protection is provided by the -5.2 V crowbar Ⓓ consisting of VR4 and CR27. LED DS3 indicates the presence of an output voltage.

−40 V Regulator

The -40 V supply is referenced to the +20V supply by the voltage divider consisting of R24, R25, and R26, designed so that the input to the error amplifier U3 is at 0 V. The output of the error amplifier drives the Darlington connection of Q5 and the series-pass transistor A23Q2. The input to the supply is floating, so the collector of A23Q2 is typically at +10 V. Foldback current protection is provided by R17, R18, R19, and Q6. Further current protection is provided by the -40 V crowbar Ⓕ consisting of VR3 and CR25. The presence of an output voltage is indicated by LED DS1.

RF Section Internal Fuse Replacement

Note For location of hardware and cables referred to in this procedure, see Figure **1.**

Warning Remove ac line cord from both instruments before proceeding with this procedure.

1. Position instrument upside-down as shown in view A.
2. Remove feet ① from rear of RF Section by removing screws ② shown in view A.
3. Remove bottom cover by loosening screw ③ and pulling cover toward rear of instrument.
4. Location of fuses is shown in view B.

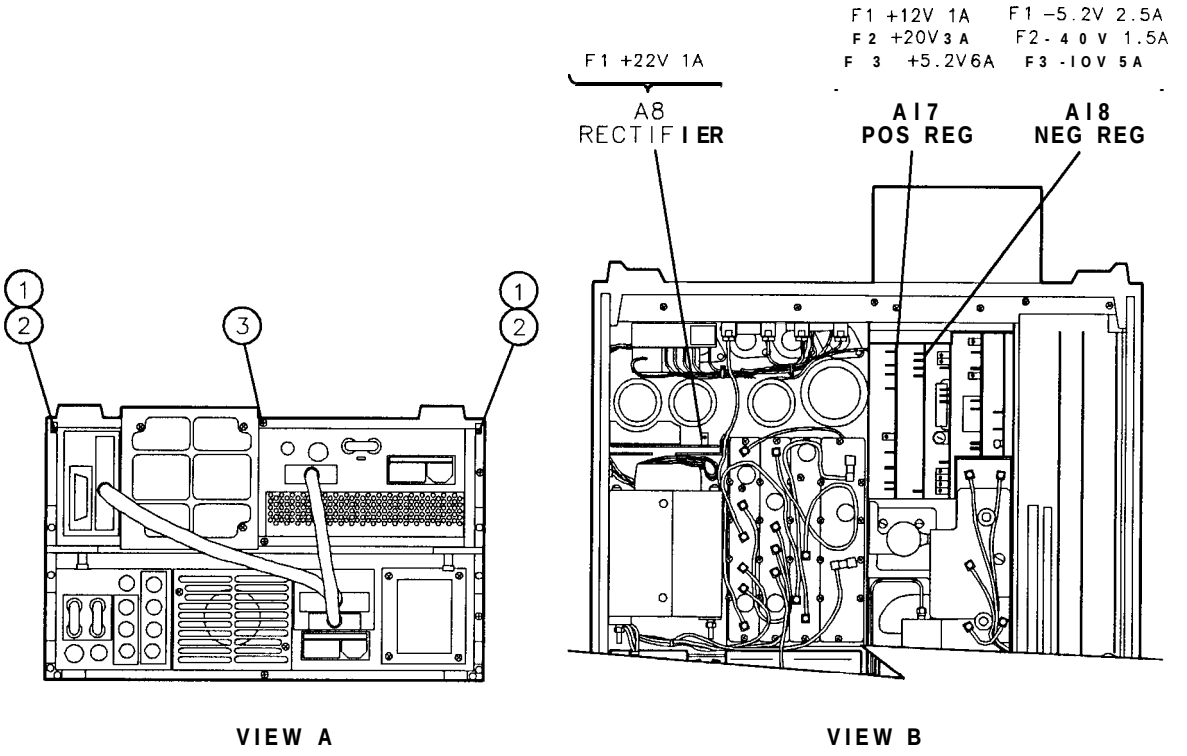

Figure 1. Internal Fuse Replacement

HP Part Number 85660-60137

A18 Negative Regulator

Reference Designation	HP Part Number	CD	Qty	Description	Mfr Code	Mfr Part Number
A18	85660-60137	2	1	BOARD ASSEMBLY, NEGATIVE REGULATOR (SERIAL PREFIXES: 2410A-2618A)	28480	85660-60137
A18C1	0160-2199	2	3	CAPACITOR-FXO 30PF +-5% 300VDC MICA	28480	0160-2199
A18C2	0180-0228	6	1	CAPACITOR-FXD 22UF+-10% 15VDC TA	56289	1500226X901582
A18C3	0180-1746	5	1	CAPACITOR-FXD 15UF+-10% 20VDC TA	56289	150D156X9020B2
A18C4	0160-2199	2		CAPACITOR-FXD 30PF +-5% 300VDC MICA	28480	0160-2199
A18C5	0180-0228	6	1	CAPACITOR-FXD 22UF+-10% 15VDC TA	56289	150D226X9015B2
A18C6	0160-2199	2	1	CAPACITOR-FXD 30PF +-5% 300VDC MICA	28480	0160-2199
A18C7	0180-0228	6	1	CAPACITOR-FXD 22UF+-10% 15VDC TA	56289	150D226X9015B2
A18C8	0180-1731	8	1	CAPACITOR-FXD 4.7UF+-10% 50VDC TA	56289	1500475X905082
A18C9	0160-4256	6	3	CAPACITOR-FXD .047UF +-20% 200VDC CER	16546	CW30 8 473M
A18C10	0180-1746	5	1	CAPACITOR-FXD 15UF+-10% 20VDC TA	56289	150D156X9020B2
A18C11	0160-4892	6	1	CAP-FXD 1uF 25 V	56289	2C37Z5U105M025C
A18C12	0160-4256	6		CAPACITOR-FXD .047UF +-20% 200VDC CER	16546	CW30 B 473M
A18C13	0160-4892	6	1	CAP-FXO 1uF 25 V	56289	2C37Z5U105M025C
A18C14	0160-4892	6	1	CAP-FXD 1uF 25 V	56289	2C37Z5U105M025C
A18C15	0160-4256	6		CAPACITOR-FXD .047UF +-20% 200VDC CER	16546	CW30 B 473M
A18C16	0180-0100	3	1	CAPACITOR-FXD 4.7UF+-10% 35VDC TA	56289	150D475X9035B2
A18CR1	1901-0033	2	1	DIODE-GEN PRP 180V 200MA DO-35	9N171	1N645
A18CR2	1901-0033	2	1	DIODE-GEN PRP 180V 200MA DO-35	9N171	1N645
A18CR3	1901-0033	2	1	DIODE-GEN PRP 180V 200MA DO-35	9N171	1N645
A18CR4	1901-0033	2	1	DIODE-GEN PRP 180V 200MA DO-35	9N171	1N645
A18CR5	1901-0033	2	1	DIODE-GEN PRP 180V 200MA DO-35	9N171	1N645
A18CR6	1901-0033	2	1	DIODE-GEN PRP 180V 200MA DO-35	9N171	1N645
A18CR7	1901-0033	2	1	DIODE-GEN PRP 180V 200MA DO-35	9N171	1N645
A18CR8	1901-0662	3	1	DIODE-PWR RECT 100V 6A	04713	MR751
A18CR9	1901-0662	3	1	DIODE-PWR RECT 100V 6A	04713	MR751
A18CR12	1901-0662	3	1	DIODE-PWR RECT 100V 6A	04713	MR751
A18CR15	1901-0743	1	1	DIODE-PWR RECT 1N4004 400V 1A DO-41	71744	1N4004
A18CR25	1884-0018	5	1	THYRISTOR-SCR 2N4186 VRRM=200	04713	2N4186
A18CR26	1884-0018	5	1	THYRISTOR-SCR 2N4186 VRRM=200	04713	2N4186
A18CR27	1884-0018	5	1	THYRISTOR-SCR 2N4186 VRRM=200	04713	2N4186
A18DS1	1990-0487	7	1	LED-LAMP LUM-INT=2MCD BVR=5V	28480	HLMP-1401
A18DS2	1990-0487	7	1	LED-LAMP LUM-INT=2MCD BVR=5V	28480	HLMP-1401
A18DS3	1990-0487	7	1	LED-LAMP LUM-INT=2MCD BVR=5V	28480	HLMP-1401
A18F1	2110-0083	6	1	FUSE 2.5A 250V NTD FE UL	75915	312 02.5
A18F2	2110-0043	8	1	FUSE 1.5A 250V NTD FE UL	75915	312 01.5
A18F3	2110-0010	9	1	FUSE (INCH) 5A 250V NTD FE UL	75915	312 005
A18MP3	2110-0269	0	6	FUSEHOLDER-CLIP TYPE.25D-FUSE	28480	2100-0269
A18MP4	5000-9043	6	1	EXTRACTOR PIN	28480	5000-9043
A18MP5	5040-6843	2	1	EXTRACTOR	28480	5040-6843
A18Q1	1854-0404	0	1	TRANSISTOR NPN SI TO-18 PD=360MW	04713	
A18Q2	1854-0441	5	1	TRANSISTOR NPN SI PD=5.8W FT=800KHZ	28480	1854-0441
A18Q3	1853-0001	1	1	TRANSISTOR PNP SI TO-39 PD=600MW	27014	
A18Q4	1853-0007	7	1	TRANSISTOR PNP 2N3251 SI TO-18 PD=360MW	04713	2N3251
A18Q5	1854-0271	9	1	TRANSISTOR NPN SI TO-39 PD=1W FT=150MHZ	04713	

**Indicates factory-selected value*

HP Part Number 85660-60137

A18 Negative Regulator

Reference Designation	HP Part Number	C D	Qty	Description	Mfr Code	Mfr Part Number
A18Q6	1854-0404	0	1	TRANSISTOR NPN SI TO-18 PD=360MW	04713	
A18R1	0811-1552	0	1	RESISTOR .56 +-5% 2W PWI TC=O+-800	11502	SPH
A18R2	0757-0421	4	1	RESISTOR 825 +-1% .125W TF TC=O+-100	19701	SFR25H
A18R3	0757-0438	3	1	RESISTOR 5.11K +-1% .125W TF TC=O+-100	19701	SFR25H
A18R4	0757-0280	3	1	RESISTOR 1K +-1% .125W TF TC=O+-100	19701	SFR25H
A18R5	0698-6835	0	1	RESISTOR 3.16K +-0.5% .125W TF TC=O+-50	19701	5033R
A18R6	0698-6835	0	1	RESISTOR 3.16K +-0.5% .125W TF TC=O+-50	19701	5033R
A18R7	0698-6835	0	1	RESISTOR 3.16K +-0.5% .125W TF TC=O+-50	19701	5033R
A18R8	0683-0275	9	1	RESISTOR 2.7 5% .25W CF TC=O-400	2M627	R-25J
A18R9	0698-3444	1	1	RESISTOR 316 1% .125W TF TC=O+-100	19701	SFR25H
A18R10	0757-0346	2	1	RESISTOR 10 +-1% .125W TF TC=O+-100	91637	CMF-55-1, T-l
A18R11	0757-0280	3	1	RESISTOR 1K +-1% .125W TF TC=O+-100	19701	SFR25H
A18R12	0757-0428	1	1	RESISTOR 1.62K +-1% .125W TF TC=O+-100	19701	SFR25H
A18R13	0698-3447	4	1	RESISTOR 422 1% .125W TF TC=O+-100	19701	SFR25H
A18R14	0698-3444	1	1	RESISTOR 316 1% .125W TF TC=O+-100	19701	SFR25H
A18R15	0757-0346	2	1	RESISTOR 10 +-1% .125W TF TC=O+-100	91637	CMF-55-1. T-l
A18R16	0698-3444	1	1	RESISTOR 316 1% .125W TF TC=O+-100	19701	SFR25H
A18R17	0811-1665	6	1	RESISTOR .82 +-5% 2W PWI TC=O+-800	11502	SPH
A18R18	0757-0280	3	1	RESISTOR 1K +-1% .125W TF TC=O+-100	19701	SFR25H
A18R19	0698-3449	6	1	RESISTOR 28.7K 1% .125W TF TC=O+-100	19701	SFR25H
A18R20	0757-0280	3	1	RESISTOR 1K +-1% .125W TF TC=O+-100	19701	SFR25H
A18R21	0757-0442	9	1	RESISTOR 10K +-1% .125W TF TC=O+-100	19701	SFR25H
A18R22	0757-0442	9	1	RESISTOR 10K +-1% .125W TF TC=O+-100	19701	SFR25H
A18R23	0811-1552	0	1	RESISTOR .56 +-5% 2W PWI TC=O+-800	11502	SPH
A18R24	0698-8464	5	1	RESISTOR 12.6K +-0.5% .125W TF TC=O+-50	19701	5033R
A18R25	0698-6835	0	1	RESISTOR 3.16K +-0.5% .125W TF TC=O+-50	19701	5033R
A18R26	0698-6835	0	1	RESISTOR 3.16K +-0.5% .125W TF TC=O+-50	19701	5033R
A18R27	0683-0275	9	1	RESISTOR 2.7 5% .25W CF TC=O-400	2M627	R-25J
A18R28	0698-3444	1	1	RESISTOR 316 1% .125W TF TC=O+-100	19701	SFR25H
A18R29	0757-0346	2	1	RESISTOR 10 +-1% .125W TF TC=O+-100	91637	CMF-55-1, T-l
A18R30	3698-3150	6	1	RESISTOR 2.37K 1% .125W TF TC=O+-100	19701	SFR25H
A18R31	0698-3150	6	1	RESISTOR 2.37K 1% .125W TF TC=O+-100	19701	SFR25H
A18R32	0812-0066	1	1	RESISTOR .33 +-5% 2W PWI TC=O+-800	11502	SPH
A18R33	0812-0066	1	1	RESISTOR .33 +-5% 2W PWI TC=O+-800	11502	SPH
A18R34	3812-0066	1	1	RESISTOR .33 +-5% 2W PWI TC=O+-800	11502	SPH
A18R35	3757-0280	3	1	RESISTOR 1K +-1% .125W TF TC=O+-100	19701	SFR25H
A18R36	0757-0441	a	1	RESISTOR 8.25K +-1% .125W TF TC=O+-100	19701	SFR25H
A18R37	0698-6835	0	1	RESISTOR 3.16K +-0.5% .125W TF TC=O+-50	19701	5033R
A18R38	3698-7050	3	1	RESISTOR 4.48K +-0.5% .125W TF TC=O+-50	19701	5033R
A18R39	3698-6853	2	1	RESISTOR 7.68K +-0.5% .125W TF TC=O+-50	19701	5033R
A18R40	0683-0275	9	1	RESISTOR 2.7 5% .25W CF TC=O-400	2M627	R-25J
A18R43	3757-0401	0	1	RESISTOR 100 +-1% .125W TF TC=O+-100	19701	SFR25H
A18R44	0757-0401	0	1	RESISTOR 100 +-1% .125W TF TC=O+-100	19701	SFR25H
A18R45	3698-3435	0	1	RESISTOR 38.3 1% .125W TF TC=O+-100	19701	SFR25H
A18R46	0757-0280	3	1	RESISTOR 1K +-1% .125W TF TC=O+-100	19701	SFR25H
A18R47	1757-0401	0	1	RESISTOR 100 +-1% .125W TF TC=O+-100	19701	SFR25H
A18TP1	1251-0600	0	1	CONNECTOR-SGL CONT PIN 1.14-MM-BSC-SZ SQ	27264	16-06-0034
A18TP2	1251-0600	0	1	CONNECTOR-SGL CONT PIN 1.14-MM-BSC-SZ SQ	27264	16-06-0034

**Indicates factory-selected value*

HP Part Number 85660-60137

Al8 Negative Regulator

Reference Designation	HP Part Number	C D	Qty	Description	Mfr Code	Mfr Part Number
A18TP3	1251-0600	0	1	CONNECTOR-SGL CONT PIN 1.14-MM-BSC-SZ SQ	27264	16-06-0034
A18TP4	1251-0600	0	1	CONNECTOR-SGL CONT PIN 1.14-MM-BSC-SZ SQ	27264	16-06-0034
A18TP5	1251-0600	0	1	CONNECTOR-SGL CONT PIN 1.14-MM-BSC-SZ SQ	27264	16-06-0034
A18U1	1820-0223	0	1	IC OP AMP GP TO-99 PKG	27014	LM301AH
A18U2	1820-0223	0	1	IC OP AMP GP TO-99 PKG	27014	LM301AH
A18U3	1820-0223	0	1	IC OP AMP GP TO-99 PKG	27014	LM301AH
A18VR1	1902-0025	4	1	DIODE-ZNR 10V 5% DO-35 PD=.4W TC=+.06%	04713	
A18VR2	1902-3171	7	1	DIODE-ZNR 11V 5% DO-35 PD=.4W TC=+.062%	04713	
A18VR3	1902-3330	0	1	DIODE-ZNR 44.2V 2% DO-35 PD=.4W	04713	
A18VR4	1902-0049	2	1	DIODE-ZNR 6.19V 5% DO-35 PD=.4W	04713	

**Indicates factory-selected value*

HP Part Number 85660-60289

A18 Negative Regulator

Reference Designation	HP Part Number	CD	Qty	Description	Mfr Code	Mfr Part Number
A18	85660-60289	5	1	BOARD ASSEMBLY NEGATIVE REGULATOR (SERIAL PREFIX: 2627A)	28480	85660-60289
A18C1	0160-5271	7	1	CAPACITOR-FXO 30PF +-5% 100VDC CER 0+-30	04222	SA102A300JAAH
A18C2	0180-0228	6	1	CAPACITOR-FXO 22UF+-10% 15VDC TA	56289	1500226X901582-OYS
A18C3	0180-1746	5	1	CAPACITOR-FXO 15UF+-10% 20VDC TA	56289	150D156X9020B2-DYS
A18C4	0160-5271	7	1	CAPACITOR-FXO 30PF +-5% 100VDC CER 0+-30	04222	SA102A300JAAH
A18C5	0180-0228	6	1	CAPACITOR-FXO 22UF+-10% 15VOC TA	56289	1500226X901582-OYS
A18C6	0160-5271	7	1	CAPACITOR-FXO 30PF +-5% 100VDC CER 0+-30	04222	SA102A300JAAH
A18C7	0180-0228	6	1	CAPACITOR-FXO 22UF+-10% 15VOC TA	56289	150D226X9015B2-DYS
A18C8	0180-1731	a	1	CAPACITOR-FXO 4.7UF+-10% 50VOC TA	56289	150D475X9050B2-DYS
A18C9	0160-4834	6	1	CAPACITOR-FXO .047UF +-10% 100VDC CER	04222	SA301C473KAAH
A18C10	0180-1746	5	1	CAPACITOR-FXO 15UF+-10% 20VDC TA	56289	150D156X9020B2-DYS
A18C11	0160-4892	6	1	CAPACITOR-FXO 1uF 25 V	56289	2C37Z5U105M025C
A18C12	0160-4834	6	1	CAPACITOR-FXO .047UF +-lo% 100VDC CER	04222	SA301C473KAAH
A18C13	0160-4892	6	1	CAPACITOR-FXO 1uF 25 V	56289	2C37Z5U105M025C
A18C14	0160-4892	6	1	CAPACITOR-FXO 1uF 25 V	56289	2C37Z5U105M025C
A18C15	0160-4834	6	1	CAPACITOR-FXO .047UF +-lo% 100VDC CER	04222	SA301C473KAAH
A18C16	0180-1731	a	1	CAPACITOR-FXO 4.7UF+-10% 50VOC TA	56289	150D475X9050B2-DYS
A18CR1	1901-0033	2	1	DIODE-GEN PRP 180V 200MA DO-35	9N171	1N645
A18CR2	1901-0033	2	1	DIODE-GEN PRP laov 200MA DO-35	9N171	1N645
A18CR3	1901-0033	2	1	DIODE-GEN PRP 180V 200MA DO-35	9N171	1N645
A18CR4	1901-0033	2	1	DIODE-GEN PRP 180V 200MA DO-35	9N171	1N645
A18CR5	1901-0033	2	1	DIODE-GEN PRP 180V 200MA DO-35	9N171	1N645
A18CR6	1901-0033	2	1	DIODE-GEN PRP 180V 200MA DO-35	9N171	1N645
A18CR7	1901-0033	2	1	DIODE-GEN PRP laov 200MA DO-35	9N171	1N645
A18CR8	1901-0662	3	1	DIODE-PWR RECT 100V 6A	04713	MR751
A18CR9	1901-0662	3	1	DIODE-PWR RECT 100V 6A	04713	MR751
A18CR12	1901-0662	3	1	DIODE-PWR RECT 100V 6A	04713	MR751
A18CR15	1901-0743	1	1	DIODE-PWR RECT 1N4004 400V 1A DO-41	71744	1N4004
A18CR25	1884-0018	5	1	THYRISTOR-SCR 2N4186 VRRM=200	04713	2N4186
A18CR26	1884-0018	5	1	THYRISTOR-SCR 2N4186 VRRM=200	04713	2N4186
A18CR27	1884-0018	5	1	THYRISTOR-SCR 2N4186 VRRM=200	04713	2N4186
A18DS1	1990-0487	7	1	LEO-LAMP LUM-INT=2MCD BVR=5V	28480	HLMP-1401
A18DS2	1990-0487	7	1	LEO-LAMP LUM-INT=2MCD BVR=5V	28480	HLMP-1401
A18DS3	1990-0487	7	1	LEO-LAMP LUM-INT=2MCD BVR=5V	28480	HLMP-1401
A18F1	2110-0083	6	1	FUSE 2.5A 250V NTD FE UL	75915	312 02.5
A18F2	2110-0043	8	1	FUSE 1.5A 250V NTD FE UL	75915	312 01.5
A18F3	2110-0010	9	1	FUSE (5A) 250V NTD FE UL	75915	312 005
A18MP1				NOT ASSIGNED		
A18MP3	2110-0726	4	6	FUSEHOLDER-CLP-TYP.250-FUSE	13060	1115-0597T
A18MP4	5000-9043	6	1	EXTRACTOR PIN	28480	5000-9043
A18MP5	5040-6843	2	1	PC BOARD EXTRACTOR	28480	5040-6843
A18MP6	1205-0638	7	1	HEAT SINK SGL TO-66-CS	13103	6017B-SE-3
A18MP7	1200-0081	4	12	INSULATOR-FLG-BSHG NYLON	26365	974 307
A18Q1	1854-0404	0	1	TRANSISTOR NPN SI TO-18 PD=360MW	04713	
A18Q2	1854-0072	a	1	TRANSISTOR NPN 2N3054 SI TO-66 PD=25W	04713	2N3054
A18Q3	1853-0001	1	1	TRANSISTOR PNP SI TO-39 PD=600MW	27014	
A18Q4	1853-0007	7	1	TRANSISTOR PNP 2N3251 SI TO-18 PD=360MW	04713	2N3251

**Indicates factory-selected value*

HP Part Number 85660-60289

Al8 Negative Regulator

Reference Designation	HP Part Number	C D	Qty	Description	Mfr Code	Mfr Part Number
A18Q5	1854-0271	9	1	TRANSISTOR NPN SI TO-39 PD=1W FT=150MHZ	04713	
A18Q6	1854-0404	0	1	TRANSISTOR NPN SI TO-18 PD=360MW	04713	
A18R1	0811-1552	0	1	RESISTOR .56 +-5% 2W PWI TC=O+-800	11502	SPH
A18R2	0757-0421	4	1	RESISTOR 825 +-1% .125W TF TC=O+-100	19701	SFR25H
A18R3	0757-0438	3	1	RESISTOR 5.11K +-1% .125W TF TC=O+-100	19701	SFR25H
A18R4	0757-0280	3	1	RESISTOR 1K +-1% .125W TF TC=O+-100	19701	SFR25H
A18R5	0698-6835	0	1	RESISTOR 3.16K +-0.5% .125W TF TC=O+-50	19701	5033R
A18R6	0698-6835	0	1	RESISTOR 3.16K +-0.5% .125W TF TC=O+-50	19701	5033R
A18R7	0698-6835	0	1	RESISTOR 3.16K +-0.5% .125W TF TC=O+-50	19701	5033R
A18R8	0683-0275	9	1	RESISTOR 2.7 5% .25W CF TC=O-400	2M627	R-25J
A18R9	0698-3444	1	1	RESISTOR 316 1% .125W TF TC=O+-100	19701	SFR25H
A18R10	0757-0346	2	1	RESISTOR 10 +-1% .125W TF TC=O+-100	91637	CMF-55-1, T-l
A18R11	0757-0280	3	1	RESISTOR 1K +-1% .125W TF TC=O+-100	19701	SFR25H
A18R12	0757-0428	1	1	RESISTOR 1.62K +-1% .125W TF TC=O+-100	19701	SFR25H
A18R13	0698-3447	4	1	RESISTOR 422 1% .125W TF TC=O+-100	19701	SFR25H
A18R14	0698-3444	1	1	RESISTOR 316 1% .125W TF TC=O+-100	19701	SFR25H
A18R15	0757-0346	2	1	RESISTOR 10 +-1% .125W TF TC=O+-100	91637	CMF-55-1, T-l
A18R16	0698-3444	1	1	RESISTOR 316 1% .125W TF TC=O+-100	19701	SFR25H
A18R17	0811-1665	6	1	RESISTOR .82 +-5% 2W PWI TC=O+-800	11502	SPH
A18R18	0757-0280	3	1	RESISTOR 1K +-1% .125W TF TC=O+-100	19701	SFR25H
A18R19	0698-3449	6	1	RESISTOR 28.7K 1% .125W TF TC=O+-100	19701	SFR25H
A18R20	0757-0280	3	1	RESISTOR 1K +-1% .125W TF TC=O+-100	19701	SFR25H
A18R21	0757-0442	9	1	RESISTOR 10K +-1% .125W TF TC=O+-100	19701	SFR25H
A18R22	0757-0442	9	1	RESISTOR 10K +-1% .125W TF TC=O+-100	19701	SFR25H
A18R23	0811-1552	0	1	RESISTOR .56 +-5% 2W PWI TC=O+-800	11502	SPH
A18R24	0698-8464	5	1	RESISTOR 12.6K +-0.5% .125W TF TC=O+-50	19701	5033R
A18R25	0698-6835	0	1	RESISTOR 3.16K +-0.5% .125W TF TC=O+-50	19701	5033R
A18R26	0698-6835	0	1	RESISTOR 3.16K +-0.5% .125W TF TC=O+-50	19701	5033R
A18R27	0683-0275	9	1	RESISTOR 2.7 5% .25W CF TC=O-400	2M627	R-25J
A18R28	0698-3444	1	1	RESISTOR 316 1% .125W TF TC=O+-100	19701	SFR25H
A18R29	0757-0346	2	1	RESISTOR 10 +-1% .125W TF TC=O+-100	91637	CMF-55-1, T-l
A18R30	0698-3150	6	1	RESISTOR 2.37K 1% .125W TF TC=O+-100	19701	SFR25H
A18R31	0698-3150	6	1	RESISTOR 2.37K 1% .125W TF TC=O+-100	19701	SFR25H
A18R32	0812-0066	1	1	RESISTOR .33 +-5% 2W PWI TC=O+-800	11502	SPH
A18R33	0812-0066	1	1	RESISTOR .33 +-5% 2W PWI TC=O+-800	11502	SPH
A18R34	0812-0066	1	1	RESISTOR .33 +-5% 2W PWI TC=O+-800	11502	SPH
A18R35	0757-0280	3	1	RESISTOR 1K +-1% .125W TF TC=O+-100	19701	SFR25H
A18R36	0757-0441	a	1	RESISTOR 8.25K +-1% .125W TF TC=O+-100	19701	SFR25H
A18R37	0698-6835	0	1	RESISTOR 3.16K +-0.5% .125W TF TC=O+-50	19701	50338
A18R38	0698-7050	3	1	RESISTOR 4.48K +-0.5% .125W TF TC=O+-50	19701	5033R
A18R39	3698-6853	2	1	RESISTOR 7.68K +-0.5% .125W TF TC=O+-50	19701	5033R
A18R40	0683-0275	9	1	RESISTOR 2.7 5% .25W CF TC=O-400	2M627	R-25J
A18R43	3757-0401	0	1	RESISTOR 100 +-1% .125W TF TC=O+-100	19701	SFR25H
A18R44	3757-0401	0	1	RESISTOR 100 +-1% .125W TF TC=O+-100	19701	SFR25H
A18R45	0698-3435	0	1	RESISTOR 38.3 1% .125W TF TC=O+-100	19701	SFR25H
A18R46	3757-0280	3	1	RESISTOR 1K +-1% .125W TF TC=O+-100	19701	SFR25H
A18R47	0757-0401	0	1	RESISTOR 100 +-1% .125W TF TC=O+-100	19701	SFR25H
A18TP1	1251-0600	0	1	CONNECTOR-SGL CONT PIN 1.14-MM-BSC-SZ SQ	27264	16-06-0034

**Indicates factory-selected value*

HP Part Number 85660-60289

Al8 Negative Regulator

Reference Designation	HP Part Number	C D	Qty	Description	Mfr Code	Mfr Part Number
A18TP2	1251-0600	0	1	CONNECTOR-SGL CONT PIN 1.14-MM-BSC-SZ SQ	27264	16-06-0034
A18TP3	1251-0600	0	1	CONNECTOR-SGL CONT PIN 1.14-MM-BSC-SZ SQ	27264	16-06-0034
A18TP4	1251-0600	0	1	CONNECTOR-SGL CONT PIN 1.14-MM-BSC-SZ SQ	27264	16-06-0034
A18TP5	1251-0600	0	1	CONNECTOR-SGL CONT PIN 1.14-MM-BSC-SZ SQ	27264	16-06-0034
A18U1	1820-0223	0	1	IC OP AMP GP TO-99 PKG	27014	LM301AH
A18U2	1820-0223	0	1	IC OP AMP GP TO-99 PKG	27014	LM301AH
A18U3	1820-0223	0	1	IC OP AMP GP TO-99 PKG	27014	LM301AH
A18VR1	1902-0025	4	1	DIODE-ZNR 10V 5% DO-35 PD=.4W TC=+.06%	04713	
A18VR2	1902-3171	7	1	DIODE-ZNR 11V 5% DO-35 PD=.4W TC=+.062%	04713	
A18VR3	1902-3330	0	1	DIODE-ZNR 44.2V 2% DO-35 PD=.4W	04713	
A18VR4	1902-0049	2	1	DIODE-ZNR 6.19V 5% DO-35 PD=.4W	04713	

**Indicates factory-selected value*

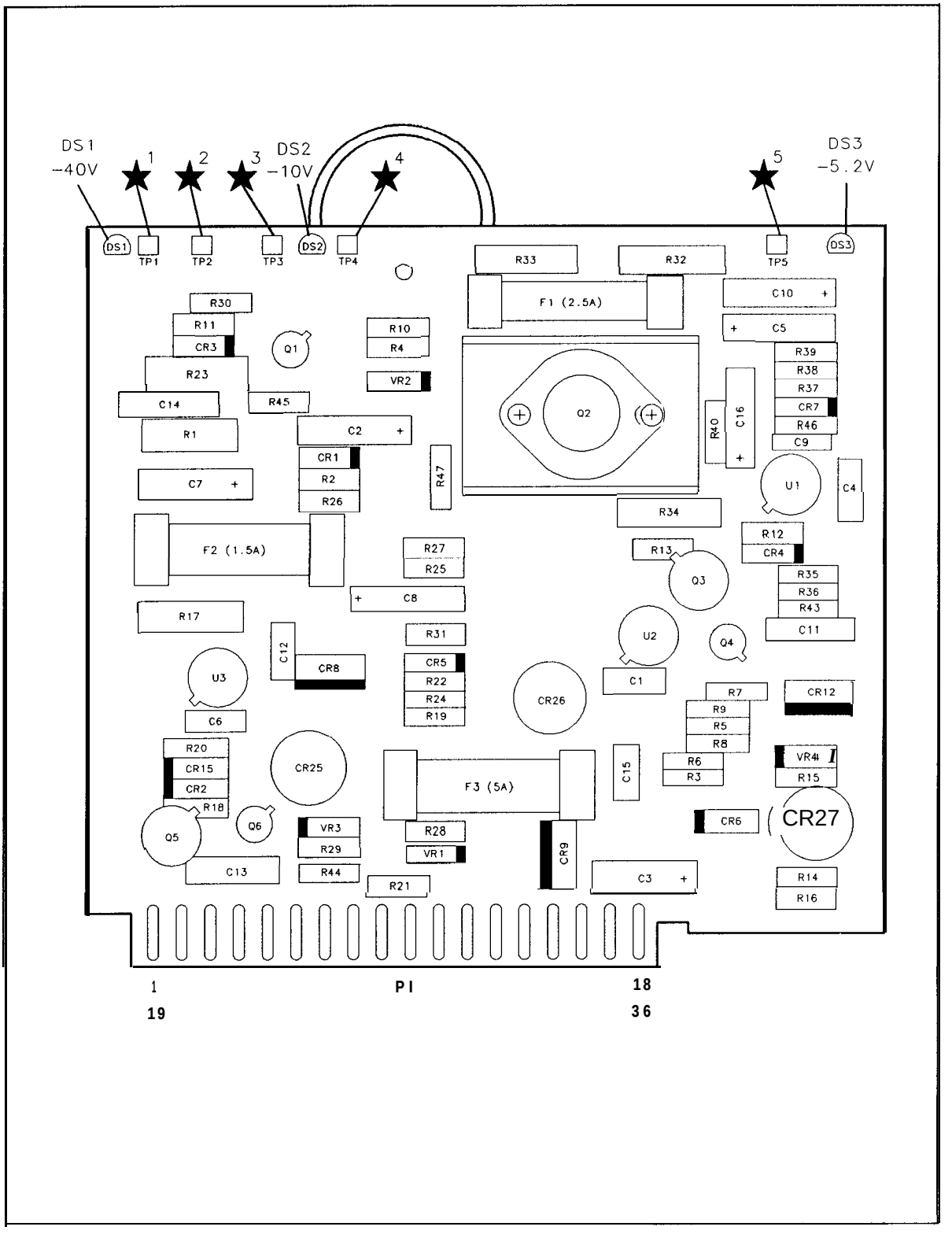

Al8 Negative Regulator Component Locations, 85660-60137

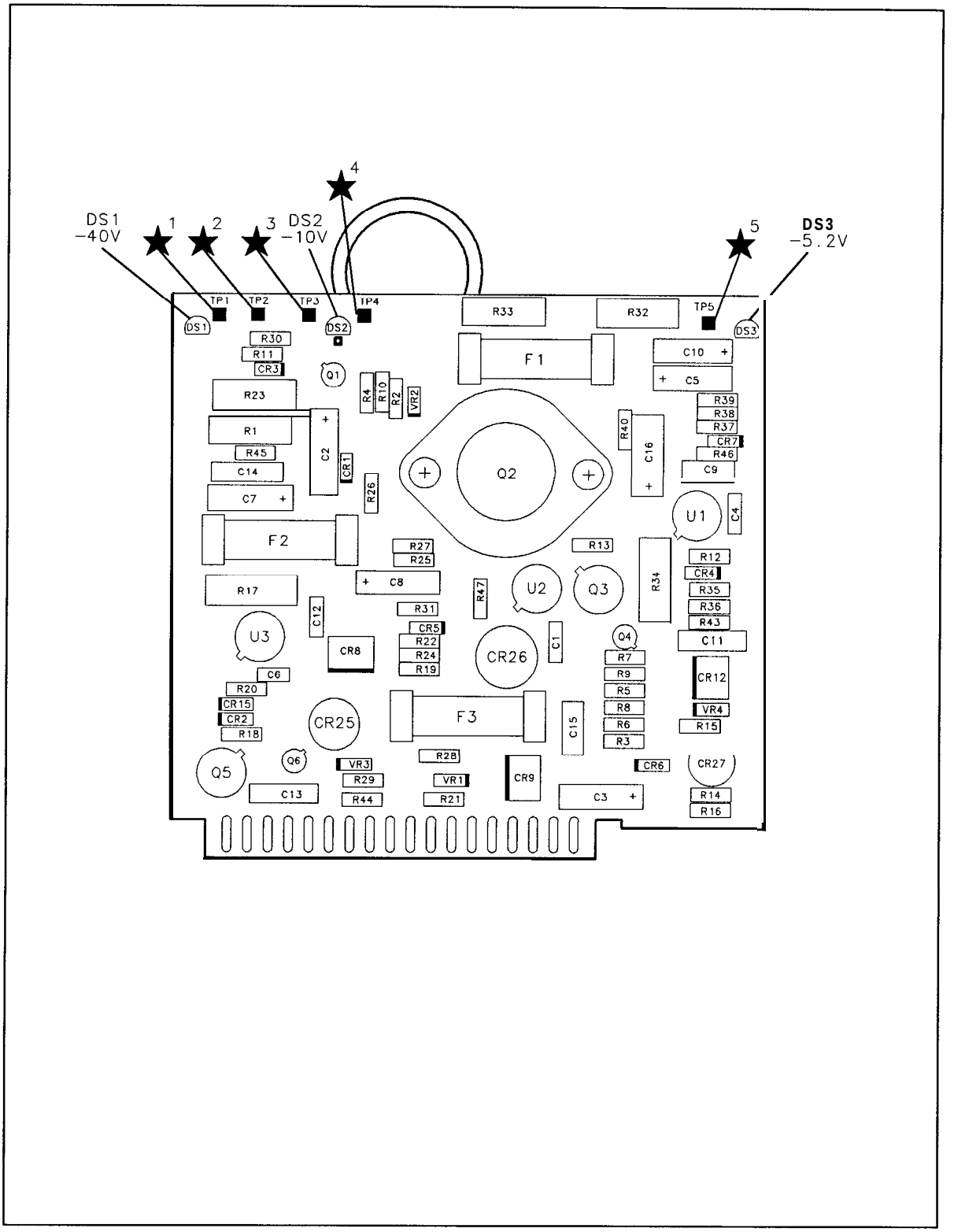

Al8 Negative Regulator Component Locations, 85660-60289

A18 NEGATIVE REGULATOR
85660-60137
(SERIAL PREFIXES:
2410A-2618A)
85660-60289
(SERIAL PREFIX: 2627A)

P1

PIN	SIGNAL	TO/FROM	FUNCTION BLOCK
1 19	-40V RETURN	A23Q2	E
2 20	-40V UNREG	A23Q2	E
3 21	-40V REG	A8P1-1,19	E
4 22	-40V BASE DRIVE	A23Q2	E
5 23	-10V RETURN	A23Q1	A
6 24	-10V REG	A8P1-15,33	A
7 25	-10V UNREG	A23Q1	A
8 26	-10V BASE DRIVE	A23Q1	A
9 27	+20V	A17P1-14,36	E
10 28	+5.2V	A17P1-16, 17,38,39	C
11 29	-40V	SEE A8	F
12 30	GND		F
13 31	-10V	SEE A8	B
14 32	NC		
15 33	GND		B
16 34	-5.2V	SEE A8	D
17 35	GND		D
18 36	NC		

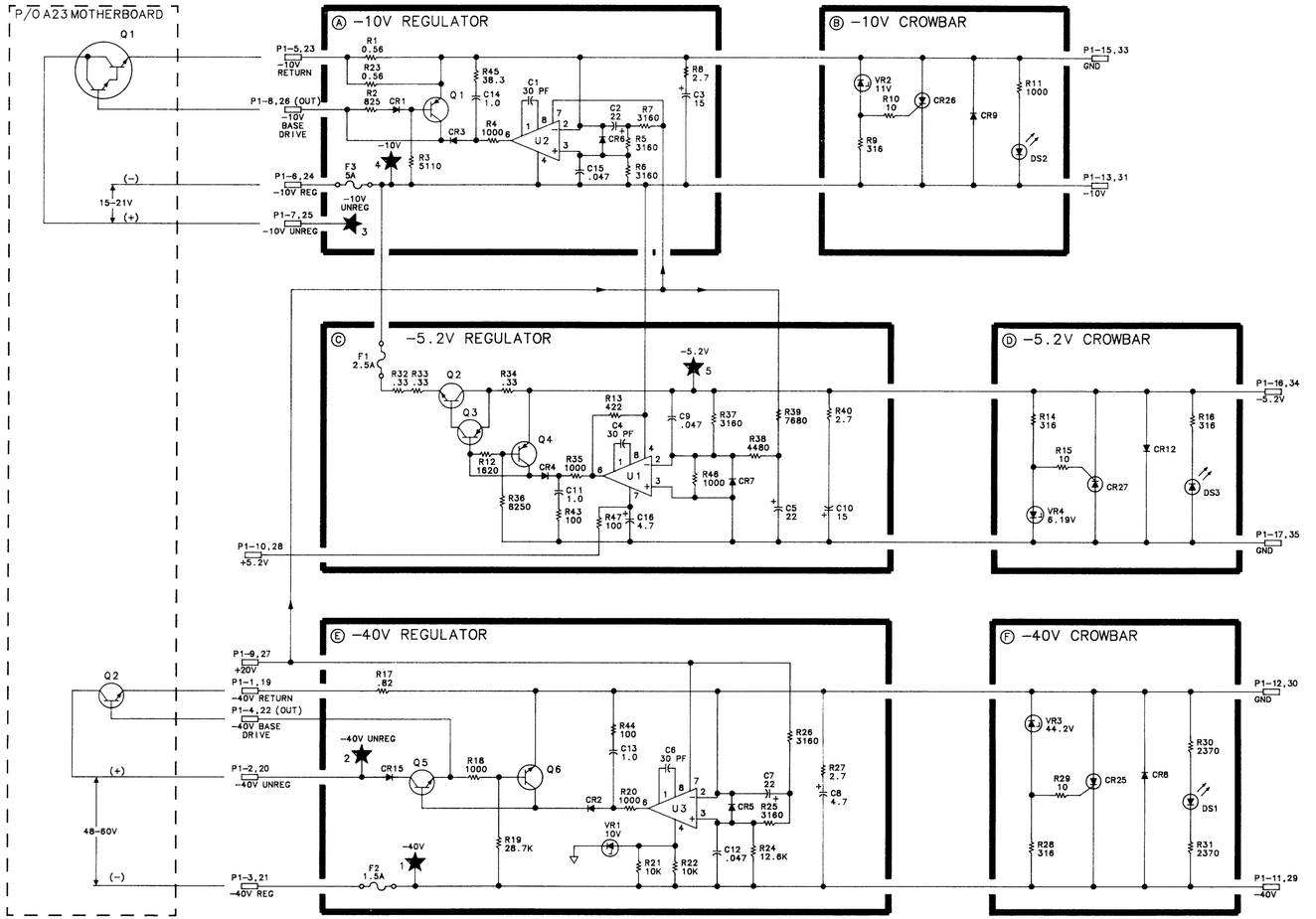

NOTES:

1. REFERENCE DESIGNATORS WITHIN THIS ASSEMBLY ARE ABBREVIATED. FOR COMPLETE REFERENCE DESIGNATION, PREFIX ABBREVIATION WITH ASSEMBLY DESIGNATION.
2. UNLESS OTHERWISE INDICATED: RESISTANCE IS IN OHMS (Ω), CAPACITANCE IS IN MICROFARADS(UF) INDUCTANCE IS IN MICROHENRIES(μH)
3. UNLESS OTHERWISE INDICATED: SIGNALS ENTER AT LEFT SIDE AND EXIT AT RIGHT SIDE OF FUNCTION BLOCKS.

A19

A19 Digital-to-Analog Converter (DAC), Circuit Description

The A19 DAC provides the tuning voltage to the A20 YTO Main Coil Driver used to coarse tune the YTO Start Frequency and set the proper amount of sweep. This occurs at the beginning of each sweep and at the beginning of each harmonic band within a sweep.

YTO Pretune Register Ⓐ and Pretune DAC Ⓒ

Frequency information is loaded into pretune registers U5 and U6 from the Instrument Bus. This is coded information from the Instrument Bus. This information is clocked into the registers by LDAS (Low = DAC Strobe). The Pretune DAC, in conjunction with U2, provides an output of 0.0 to +12.6 V dc in approximately 3 mV increments. The exact voltage is dependent on the coded information input. This voltage is applied to Summing Amplifier U4 through R3.

Frequency Span Register and Switch Driver Ⓑ and Span Scaling Ⓔ

Coded span information from the Al2 Front-Panel Interface is loaded into register U7 from the Instrument Bus and clocked out to switch drivers U8 and U9 by LSAS (Low = Scan Attenuator Strobe). These switch drivers turn on (close) switches Q2 through Q6 according to the coded information input. The SCAN DAC IN signal (attenuated sweep ramp) from the Al6 Scan Generator is then applied to the proper scaling resistors R26 through R30, R38, and R58, to provide the sweep for the YTO. This output current is applied to Summing Amplifier u4.

Summing Amplifier Ⓕ

The fixed dc current from the Pretune DAC, corresponding to the desired YTO Start Frequency, and the ramp current from the Scaling Resistors, corresponding to the desired Frequency Span, are summed at the input of U4. U4 amplifies this combined signal and applies it to both the YTO and YTX at a sensitivity of -3 V/GHz to coarse tune the analyzer to the selected Start Frequency and Frequency Span.

Negative Voltage Reference Ⓓ and Positive Voltage Reference Ⓗ

U3 and associated circuitry Ⓓ provide a nominal -12.6 V reference for U3, the pretune DAC in function block Ⓒ. U10 and associated circuitry Ⓗ provide a nominal +10 V reference for summing amplifier U4 in function block Ⓕ.

HP Part Number 85660-60212

A19 DAC

Reference Designation	HP Part Number	C D	Qty	Description	Mfr Code	Mfr Part Number
A19	85660-60212	4	1	BOARD ASSEMBLY. DIGITAL-TO-ANALOG CONVERTER (DAC)	28480	85660-60212
A19C1	0160-4005	3	1	CAPACITOR-FXD 1UF +-20% 100VDC CER	04222	SR401E105MAAH
A19C2	0180-0630	4	1	CAP-FXD 4.7uF 50 V TA	56289	199D1123
A19C4	0160-2055	9	1	CAPACITOR-FXD .01UF +80-20% 100VDC CER		805-504 Y5V 1032
A19C5	0160-4005	3	1	CAPACITOR-FXD 1UF +-20% 100VDC CER	04222	SR401E105MAAH
A19C6	0160-2055	9	1	CAPACITOR-FXD .01UF +80-20% 100VDC CER		805-504 Y5V 1032
A19C7	0160-2055	9	1	CAPACITOR-FXD .01UF +80-20% 100VDC CER		805-504 Y5V 1032
A19C10	0160-2055	9	1	CAPACITOR-FXD .01UF +80-20% 100VDC CER		805-504 Y5V 1032
A19C11	0180-0116	1	1	CAPACITOR-FXD 6.8UF+-10% 35VDC TA	56289	150D685X9035B2-DYS
A19C12	0160-4005	3	1	CAPACITOR-FXD 1UF +-20% 100VDC CER	04222	SR401E105MAAH
A19C13	0180-0229	7	1	CAP-FXD 33uF 10 V TA	56289	150D336X9010B2-DYS
A19C14	0160-2055	9	1	CAPACITOR-FXD .01UF +80-20% 100VDC CER		805-504 Y5V 103Z
A19C15	0180-0183	2	1	CAP-FXD 10uF 50 V AL-ELCTLT	56289	30D106G050CB2-DSM
A19C16	0160-4005	3	1	CAPACITOR-FXD 1UF +-20% 100VDC CER	04222	SR401E105MAAH
A19C17	0180-0228	6	1	CAPACITOR-FXD 22UF+-10% 15VDC TA	56289	150D226X9015B2-DYS
A19C18	0160-4745	8	1	CAP-FXD 0.33uF 100 V POLYP-FL	84411	HEW-446
A19C19	0160-4005	3	1	CAPACITOR-FXD 1UF +-20% 100VDC CER	04222	SR401E105MAAH
A19C20	0180-0630	4	1	CAP-FXD 4.7uF 50 V TA	56289	199111123
A19C21	0180-0630	4	1	CAP-FXD 4.7uF 50 V TA	56289	199D1123
A19C22	0160-4745	8	1	CAP-FXD 0.33uF 100 V POLYP-FL	84411	HEW-446
A19C23	0160-2055	9	1	CAPACITOR-FXD .01UF +80-20% 100VDC CER		805-504 Y5V 1032
A19C24	0160-4005	3	1	CAPACITOR-FXD 1UF +-20% 100VDC CER	04222	SR401E105MAAH
A19CR1	1901-0179	7	1	DIODE-SWITCHING 15V 50MA 750PS DO-7	27014	FD777
A19CR2	1901-0539	3	1	DIODE-SCHOTTKY SM SIG		
A19CR3	1901-0050	3	1	DIODE-SWITCHING 80V 200MA 2NS DO-35	9N171	1N4150
A19E1	0340-0060	4	1	TERMINAL-STUD SPCL-FDTHRU PRESS-MTG	98291	011-6809-00-0-209
A19MP1				NOT ASSIGNED		
A19MP4	5000-9043	6	1	PIN	28480	5000-9043
A19MP5	5040-6843	2	1	EXTRACTOR, PC	28480	5040-6843
A19MP6	0890-0644	5	1	SLEEVING-FLEX .102-ID NEMA-3 .018-WALL	79074	VARFIL B-A-1
A19Q1	1853-0281	9	1	TRANSISTOR PNP 2N2907A SI TO-18 PD=400MW	04713	2N2907A
A19Q2	1853-0322	9	1	TRANSISTOR PNP 2N2946A SI TO-46 PD=400MW	04713	
A19Q3	1853-0322	9	1	TRANSISTOR PNP 2N2946A SI TO-46 PD=400MW	04713	
A19Q4	1853-0322	9	1	TRANSISTOR PNP 2N2946A SI TO-46 PD=400MW	04713	
A19Q5	1853-0322	9	1	TRANSISTOR PNP 2N2946A SI TO-46 PD=400MW	04713	
A19Q6	1853-0322	9	1	TRANSISTOR PNP 2N2946A SI TO-46 PD=400MW	04713	
A19Q7	1853-0322	9	1	TRANSISTOR PNP 2N2946A SI TO-46 PD=400MW	04713	
A19Q8	1853-0322	9	1	TRANSISTOR PNP 2N2946A SI TO-46 PD=400MW	04713	
A19R1	0698-8590	8	1	RESISTOR 853 +-1% .125W TF TC=O+-100	19701	SFR25H
A19R2	0757-0280	3	1	RESISTOR 1K +-1% .125W TF TC=O+-100	19701	SFR25H
A19R3	0699-0306	0	1	RESISTOR 6K +-0.025% .1W TF TC=O+-5	19701	50232
A19R4	0698-0024	7	1	RESISTOR 2.61K 1% .5W TF TC=O+-100	19701	5053R
A19R5	0699-0306	0	1	RESISTOR 6K +-0.025% .1W TF TC=O+-5	19701	50232
A19R6	0699-0642	7	1	RESISTOR 10K +-0.1% .1W TF TC=O+-5	19701	5023ZA10K00B
A19R7	0699-0306	0	1	RESISTOR 6K +-0.025% .1W TF TC=O+-5	19701	50232
A19R8	0757-0346	2	1	RESISTOR 10 +-1% .125W TF TC=0+-100	91637	CMF-55-1, T-1
A19R9	2100-4020	8	1	RESISTOR-TRMR 2K 10% TF SIDE-ADJ 26-TRN	18612	1280-2K-10%

**Indicates factoyselected value*

HP Part Number 85660-60212

A19 DAC

Reference Designation	HP Part Number	C D	Qty	Description	Mfr Code	Mfr Part Number
A19R10	0757-0346	2	1	RESISTOR 10 +-1% .125W TF TC=O+-100	91637	CMF-55-1, T-l
A19R11	0698-6348	C	1	RESISTOR 3K +-0.1% .125W TF TC=O+-25	19701	5033R
A19R12	0757-0439	4	1	RESISTOR 6.81K +-1% .125W TF TC=O+-100	19701	SFR25H
A19R13	0757-0346	2	1	RESISTOR 10 +-1% .125W TF TC=O+-100	91637	CMF-55-1, T-l
A19R14	0757-0346	2	1	RESISTOR 10 +-1% .125W TF TC=O+-100	91637	CMF-55-1, T-l
A19R15	0699-0156	8	1	RESISTOR 6.19K +-0.1% .1W TF TC=O+-5	19701	50232
A19R16	0757-0346	2	1	RESISTOR 10 +-1% .125W TF TC=O+-100	91637	CMF-55-1, T-l
A19R17	0757-0400	9	1	RESISTOR 90.9 +-1% .125W TF TC=O+-100	19701	SFR25H
A19R18	0757-0422	5	1	RESISTOR 909 +-1% .125W TF TC=O+-100	19701	SFR25H
A19R19	2100-1762	9	1	RESISTOR-TRMR 20K 5% WW SIDE-ADJ I-TRN		CT-106-4-20K
A19R20	3757-0159	5	1	RESISTOR 1K +-1% .5W TF TC=O+-100	19701	5053R
A19R21	3757-0442	9	1	RESISTOR 10K +-1% .125W TF TC=O+-100	19701	SFR25H
A19R22	0757-0442	9	1	RESISTOR 10K +-1% .125W TF TC=O+-100	19701	SFR25H
A19R23	0757-0442	9	1	RESISTOR 10K +-1% .125W TF TC=O+-100	19701	SFR25H
A19R24	0757-0442	9	1	RESISTOR 10K +-1% .125W TF TC=O+-100	19701	SFR25H
A19R25	0757-0442	9	1	RESISTOR 10K +-1% .125W TF TC=O+-100	19701	SFR25H
A19R26	0699-0302	6	1	RESISTOR 800 +-0.025% .1W TF TC=O+-5	19701	50232
A19R27	0699-0304	8	1	RESISTOR 8K +-0.025% .1W TF TC=O+-5	19701	50232
A19R28	0699-0309	3	1	RESISTOR 80K +-0.025% .1W TF TC=O+-5	19701	50232
A19R29	0699-0643	8	1	RESISTOR 400K +-0.02% .125W TF TC=O+-5		PR1/8
A19R30	0683-4755	8	1	RESISTOR 4.7M 5% .25W CC TC=-900/+1100	01121	CB4755
A19R31	0699-0643	8	1	RESISTOR 400K +-0.02% .125W TF TC=O+-5		PR1/8
A19R32	2100-3163	8	1	RESISTOR-TRMR 1M 20% TKF SIDE-ADJ 17-TRN	73138	89PR1M
A19R33	0757-0443	C	1	RESISTOR 11K +-1% .125W TF TC=O+-100	19701	SFR25H
A19R34	0757-0416	7	1	RESISTOR 511 +-1% .125W TF TC=O+-100	19701	SFR25H
A19R35	0757-0442	9	1	RESISTOR 10K +-1% .125W TF TC=O+-100	19701	SFR25H
A19R36	0757-0440	7	1	RESISTOR 7.5K +-1% .125W TF TC=O+-100	19701	SFR25H
A19R37	0757-0443	C	1	RESISTOR 11K +-1% .125W TF TC=O+-100	19701	SFR25H
A19R38	0757-0465	6	1	RESISTOR 100K +-1% .125W TF TC=O+-100	19701	SFR25H
A19R39	0757-0438	3	1	RESISTOR 5.11K +-1% .125W TF TC=O+-100	19701	SFR25H
A19R40	0757-0442	9	1	RESISTOR 10K +-1% .125W TF TC=O+-100	19701	SFR25H
A19R41	2100-3154	7	1	RESISTOR-TRMR 1K 10% TKF SIDE-ADJ 17-TRN	73138	89PR1K
A19R42	0757-0442	9	1	RESISTOR 10K +-1% .125W TF TC=O+-100	19701	SFR25H
A19R43	2100-3061	5	1	RESISTOR-TRMR 500K 10% TKF SIDE-ADJ 17-T	73138	89PR500K
A19R44	0698-3260	9	1	RESISTOR 464K 1% .125W TF TC=O+-100	19701	SFR25H
A19R45	0757-0276	7	1	RESISTOR 61.9 +-1% .125W TF TC=O+-100	19701	SFR25H
A19R46	0698-8572	6	1	RESISTOR 508.7 +-0.1% .125W TF TC=O+-25	19701	5033R
A19R47	0757-0438	3	1	RESISTOR 5.11K +-1% .125W TF TC=O+-100	19701	SFR25H
A19R48	0757-0346	2	1	RESISTOR 10 +-1% .125W TF TC=O+-100	91637	CMF-55-1, T-l
A19R49	0699-0642	7	1	RESISTOR 10K +-0.1% .1W TF TC=O+-5	19701	5023ZA10K00B
A19R50	2100-4020	8	1	RESISTOR-TRMR 2K 10% TF SIDE-ADJ 26-TRN	18612	1280-2K-10%
A19R51	0698-6348	C	1	RESISTOR 3K +-0.1% .125W TF TC=O+-25	19701	5033R
A19R52	0699-0156	8	1	RESISTOR 6.19K +-0.1% .1W TF TC=O+-5	19701	50232
A19R53	0757-0438	3	1	RESISTOR 5.11K +-1% .125W TF TC=O+-100	19701	SFR25H
A19R54	0757-0442	9	1	RESISTOR 10K +-1% .125W TF TC=O+-100	19701	SFR25H
A19R55	0757-0438	3	1	RESISTOR 5.11K +-1% .125W TF TC=O+-100	19701	SFR25H
A19R56	2100-3154	7	1	RESISTOR-TRMR 1K 10% TKF SIDE-ADJ 17-TRN	73138	89PR1K
A19R57	0757-0442	9	1	RESISTOR 10K +-1% .125W TF TC=O+-100	19701	SFR25H

**Indicates factory-selected value*

HP Part Number 85660-60212

A19 DAC

Reference Designation	HP Part Number	C D	Qty	Description	Mfr Code	Mfr Part Number
A19R58	0757-0465	6	1	RESISTOR 100K +-1% .125W TF TC=O+-100	19701	SFR25H
A19R59	0757-0346	2	1	RESISTOR 10 +-1% .125W TF TC=O+-100	91637	CMF-55-1. T-l
A19R60	0757-0346	2	1	RESISTOR 10 +-1% .125W TF TC=O+-100	91637	CMF-55-1, T-l
A19R61	0757-0346	2	1	RESISTOR 10 +-1% .125W TF TC=O+-100	91637	CMF-55-1, T-l
A19R62	0757-0346	2	1	RESISTOR 10 +-1% .125W TF TC=O+-100	91637	CMF-55-1, T-l
A19TP1	1251-0600	0	1	CONNECTOR-SGL CONT PIN 1.14-MM-BSC-SZ SQ	27264	16-06-0034
A19TP2	1251-0600	0	1	CONNECTOR-SGL CONT PIN 1.14-MM-BSC-SZ SQ	27264	16-06-0034
A19TP3	1251-0600	0	1	CONNECTOR-SGL CONT PIN 1.14-MM-BSC-SZ SQ	27264	16-06-0034
A19TP4	1251-0600	0	1	CONNECTOR-SGL CONT PIN 1.14-MM-BSC-SZ SQ	27264	16-06-0034
A19TP5	1251-0600	0	1	CONNECTOR-SGL CONT PIN 1.14-MM-BSC-SZ SQ	27264	16-06-0034
A19U1	1826-1190	4	1	D/A 12-1/2-BIT 18-CERDIP CMOS	28480	1826-1190
A19U1	1826-1169	7	0	ALTERNATE FOR 1826-1190	24355	AD7541ABQ
A19U2	1826-0471	2	1	IC OP AMP LOW-DRIFT TO-99 PKG	06665	OP-07CJ SELECTED
A19U3	5180-2315	1	1	IC OP AMP LOW-DRIFT TO-99 PKG	28480	5180-2315
A19U3	5180-2314	0	0	ALTERNATE FOR 5180-2315	28480	5180-2314
A19U4	5180-2315	1	1	IC OP AMP LOW-DRIFT TO-99 PKG	28480	5180-2315
A19U4	5180-2314	0	0	ALTERNATE FOR 5180-2315	28480	5180-2314
A19U5	1820-1196	8	1	IC FF TTL LS D-TYPE POS-EDGE-TRIG COM CL	01295	SN74LS174N
A19U6	1820-1196	8	1	IC FF TTL LS D-TYPE POS-EDGE-TRIG COM CL	01295	SN74LS174N
A19U7	1820-1196	8	1	IC FF TTL LS D-TYPE POS-EDGE-TRIG COM CL	01295	SN74LS174N
A19U8	1826-0161	7	1	IC OP AMP GP QUAD 14-DIP-P PKG	27014	LM324N
A19U9	1826-0161	7	1	IC OP AMP GP QUAD 14-DIP-P PKG	27014	LM324N
A19U10	5180-2315	1	1	IC OP AMP LOW-DRIFT TO-99 PKG	28480	5180-2315
A19U10	5180-2314	0	0	ALTERNATE FOR 5180-2315	28480	5180-2314
A19VR1	1902-0625	0	1	DIODE-ZNR 1N829 6.2V 5% DO-35 PD=.25W TC	04713	1N829
A19VR2	1902-0625	0	1	DIODE-ZNR 1N829 6.2V 5% DO-35 PD=.25W TC	04713	1N829
A19VR3	1902-3203	6	1	DIODE-ZNR 14.7V 5% DO-35 PD=.4W	04713	

**Indicates factory-selected value*

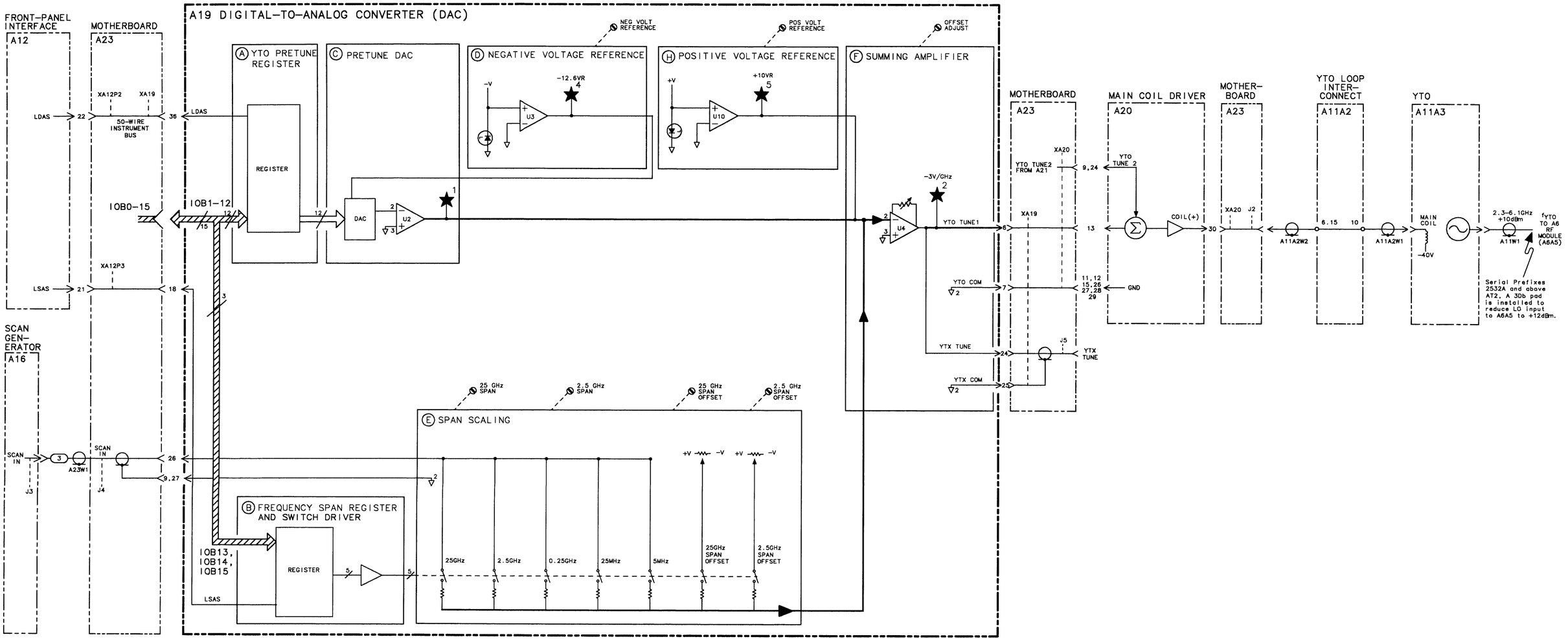

A19 DIGITAL-TO-ANALOG CONVERTER, BLOCK DIAGRAM

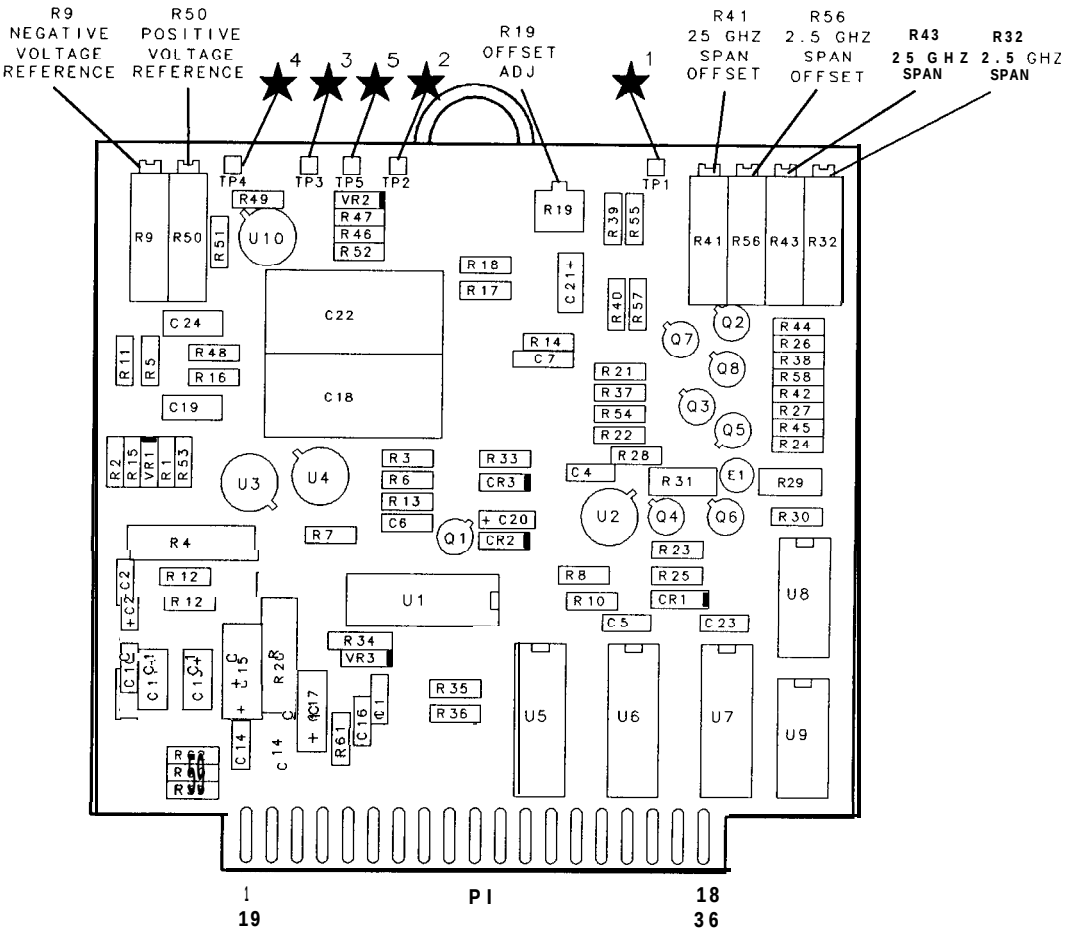

A19 Digital-to-Analog Converter Component Locations, 85660-60212

A19 DIGITAL-TO-ANALOG CONVERTER (DAC)
85660-60212 (SERIAL PREFIX: 2410A)

P1

PIN	SIGNAL	TO/FROM	FUNCTION BLOCK
	+20V	A17P1-14,36	G
19	+20V	A17P1-14,36	G
	+5.2V	A17P1-16,38	G
0	+5.2V	A17P1-16,38	G
	-40V	A18P1-11,29	G
1	-40V	A18P1-11,29	G
	-10V	A18P1-13,31	G
2	-10V	A18P1-13,31	G
	GND		G
3	GND		G
	YTO TUNE 1	A20P1-13	F
4	YTX TUNE	A6A12J1	F
	YTO COM		F
5	YTX COM		F
	GND		G
28	SCAN IN	A16J3	E
	GND		E
27	GND		E
	IOB1		A
28	IOB0		NC
	IOB3		A
29	IOB2		A
	IOB5		A
0	IOB4		A
	IOB7		A
1	IOB6		A
	IOB9		A
2	IOB8		A
15	IOB11		A
33	IOB10		A
16	IOB13		B
34	IOB12		A
17	IOB15		B
35	IOB14		B
18	LSAS	A12P3-21	B
36	LDAS	A12P2-22	A

INSTRUMENT BUS DATA LINES

Ⓐ YTO PRETUNE REGISTER

P1-36 LDAS
P1-34 IOB12
P1-15 IOB11
P1-33 IOB10
P1-14 IOB9
P1-32 IOB8
P1-13 IOB7
P1-31 IOB6
P1-12 IOB5
P1-30 IOB4
P1-11 IOB3
P1-29 IOB2
P1-10 IOB1

U6, U5 74HC273

Ⓒ PRETUNE DAC

U1 AD7541 DAC
+15V, -10V, +20VF, -25V
POS DAC

Ⓑ NEGATIVE VOLTAGE REFERENCE

VR1 8.2V
NEGATIVE VOLT. REF.
-12.6 VR NOM
-40VF

Ⓗ POSITIVE VOLTAGE REFERENCE

VR2 8.2V
POSITIVE VOLT. REF.
+10VR NOM

Ⓕ SUMMING AMPLIFIER

OFFSET ADJUST
-3V/GHZ
P1-6 YTO TUNE 1
P1-7 YTO COM
P1-24 YTX TUNE
P1-25 YTX COM

Ⓓ POWER SUPPLIES

P1-1, 19 +20V
P1-2, 20 +5.2V
P1-5, 23 GND
P1-8 GND
P1-4, 22 -10V
P1-3, 21 -40V
VR3 14.7V

Ⓖ FREQUENCY SPAN REGISTER AND SWITCH DRIVER

P1-18 LSAS
P1-35 IOB14
P1-16 IOB13
P1-17 IOB15
U7 74HC273
U9A, U9B, U9C, U9D
25 GHZ
2.5 GHZ
0.25 GHZ
25 MHZ
5 MHZ

Ⓒ SPAN SCALING

P1-26 SCAN IN
P1-9, 27 GND
25 GHZ SPAN OFFSET
2.5 GHZ SPAN OFFSET
2.5 GHZ SPAN
25 GHZ SPAN

NOTES:

1. REFERENCE DESIGNATORS WITHIN THIS ASSEMBLY ARE ABBREVIATED. FOR COMPLETE REFERENCE DESIGNATION, PREFIX ABBREVIATION WITH ASSEMBLY DESIGNATION.
2. UNLESS OTHERWISE INDICATED: RESISTANCE IS IN OHMS (Ω). CAPACITANCE IS IN MICROFARADS (μF). INDUCTANCE IS IN MICROHENRIES (μH).
3. UNLESS OTHERWISE INDICATED: SIGNALS ENTER AT LEFT SIDE AND EXIT AT RIGHT SIDE OF FUNCTION BLOCKS.
4. MNEMONIC TABLE:

MNEMONIC	DESCRIPTION
LDAS	LOW-DAC STROBE
LSAS	LOW-SCAN ATTENUATOR STROBE
IOB6–IOB15	INSTRUMENT BUS DATA BITS 6 THRU 15

5. GROUNDS, $\frac{1}{2}$, AND $\frac{2}{2}$, ARE SHORTED TOGETHER THROUGH A20 YTO DRIVER BOARD ASSEMBLY.

A20

A20 Main Coil Driver, Circuit Description

The A20 Main Coil Driver produces a tuning current proportional to the tuning voltage input from the A19 DAC and applies it to the A11A3 YTO. This provides coarse tuning of the YTO frequency and sweep. Fine tuning is performed by summing a current proportional to the low-frequency error voltage from the A11A4 YTO Phase Detector (via the A21 FM Coil Driver) with the tuning current from the A19 DAC. Additional fine tuning is done by the A21 FM Coil Driver using the current proportional to the high-frequency error voltage component.

Input Amplifier Ⓐ

Transistors Q6 through Q12 form a discrete noninverting operational amplifier whose output is proportional to the tuning voltage input (YTO TUNE 1). This output is applied to Coil Driver Q1, Q4, and Q5 which supply the YTO Main Coil current. For frequency spans greater than 5 MHz, LYSP (low = YTO span) turns on (closes) switch Q2 allowing a current flow through R19. This is done to improve sweep linearity for wide spans (>5 MHz).

Phase Lock Amplifier Ⓔ

Phase Lock Amplifier U1B provides a current proportional to the low-frequency error voltage input (YTO TUNE 2). This error voltage input is from the A11A4 YTO Phase Detector and is indicative of the YTO frequency error. The current output of the Phase Lock Amplifier is summed with the current output controlled by the Input Amplifier in the Coil Driver.

Coil Driver Ⓒ

Transistors Q1, Q4, and Q5 provide drive current to the main coil of the A11A3 YTO to set the frequency and amount of sweep of the YTO. YTO main coil sensitivity is approximately 25 mA/GHz. The Coil Driver output is between approximately 50 and 150 mA.

Shaping Network Ⓑ

Compensation network U2 provides linearity shaping of the current output of the Coil Driver. The components of the network are factory selected to match the YTO. Resistors R24, R16, and R25 sense the current output of the Coil Driver. R25 is used to fine tune the YTO to 6.15 GHz.

Offset Reference Ⓓ

The Offset Reference composed of U1A and associated circuitry provides a fixed voltage to Phase Lock Amplifier U1B. This voltage provides the current necessary to fine tune the YTO to 2.3 GHz.

HP Part Number 85660-60206

A20 Main Coil Driver

Reference Designation	HP Part Number	CD	Qty	Description	Mfr Code	Mfr Part Number
A20	85660-60206	6	1	BOARD ASSEMBLY, MAIN COIL DRIVER	28480	85660-60206
A20C1	0160-4832	4	1	CAPACITOR-FXD .01UF +-10% 100VDC CER	04222	SA101C103KAAH
A20C2	0180-1731	8	1	CAPACITOR-FXD 4.7UF+-10% 50VDC TA	56289	150D475X9050B2-DYS
A20C3	0180-0116	1	1	CAPACITOR-FXD 6.8UF+-10% 35VDC TA	56289	150D685X9035B2-DYS
A20C4	0160-0574	3	1	CAPACITOR-FXD .022UF +-20% 100VDC CER	04222	SR201C223MAAH
A20C5	0180-0116	1	1	CAPACITOR-FXD 6.8UF+-10% 35VDC TA	56289	150D685X9035B2-DYS
A20C6	0160-4832	4	1	CAPACITOR-FXD .01UF +-10% 100VDC CER	04222	SA101C103KAAH
A20C7	0180-2139	2	1	CAP-FXD 10uF 60 V WT-SLG-TA-ELCTLT	56289	109D106X0060C2-DYP
A20C8	0160-4832	4	1	CAPACITOR-FXD .01UF +-10% 100VDC CER	04222	SA101C103KAAH
A20C9	0180-0291	3	1	CAPACITOR-FXD 1UF+-10% 35VDC TA	56289	150D105X9035A2-DYS
A20C10	0180-0229	7	1	CAP-FXD 33uF 10 V TA	56289	150D336X9010B2-DYS
A20C11	0160-4832	4	1	CAPACITOR-FXD .01UF +-10% 100VDC CER	04222	SA101C103KAAH
A20C12	0160-4832	4	1	CAPACITOR-FXD .01UF +-10% 100VDC CER	04222	SA101C103KAAH
A20C13	0180-0197	8	1	CAPACITOR-FXD 2.2UF+-10% 20VDC TA	56289	150D225X9020A2-DYS
A20C14	0180-0228	6	1	CAPACITOR-FXD 22UF+-10% 15VDC TA	56289	150D226X9015B2-DYS
A20C15	0180-1746	5	1	CAPACITOR-FXD 15UF+-10% 20VDC TA	56289	150D156X9020B2-DYS
A20C16	0160-4832	4	1	CAPACITOR-FXD .01UF +-10% 100VDC CER	04222	SA101C103KAAH
A20C17	0160-4442	2	1	CAPACITOR-FXD .15UF +-20% 100VDC CER	04222	SR301C154MAAH
A20C18	0160-4832	4	1	CAPACITOR-FXD .01UF +-10% 100VDC CER	04222	SA101C103KAAH
A20C19	0160-3877	5	1	CAPACITOR-FXD 100PF +-20% 200VDC CER	04222	SR202C101MAAH
A20C20	0160-3878	6	1	CAP-FXD 1000pF 100 V	04222	SR201C102MAAH
A20CR1	1901-0033	2	1	DIODE-GEN PRP 180V 200MA DO-35	9N171	1N645
A20CR2	1901-0040	1	1	DIODE-SWITCHING 30V 50MA 2NS DO-35	71468	
A20CR3	1901-0040	1	1	DIODE-SWITCHING 30V 50MA 2NS DO-35	71468	
A20CR5	1901-0033	2	1	DIODE-GEN PRP 180V 200MA DO-35	9N171	1N645
A20CR6	1901-0033	2	1	DIODE-GEN PRP 180V 200MA DO-35	9N171	1N645
A20CR7	1901-0033	2	1	DIODE-GEN PRP 180V 200MA DO-35	9N171	1N645
A20MP1				NOT ASSIGNED		
A20MP3	1205-0085	8	1	HEAT SINK TO-66-CS	13103	6166B BASE ONLY
A20MP4	2190-0003	8	2	WASHER-LK HLCL NO. 4 .115-IN-ID	80120	
A20MP5	2200-0107	6	2	SCREW-MACH 4-40 .375-IN-LG PAN-HD-POZI	77250	
A20MP6	6040-0454	0	1	HEAT SINK COMPOUND SYNTH/REFRC	92895	52022IJ
A20MP7	2260-0001	5	2	NUT-HEX-DBL-CHAM 4-40-THD .094-IN-THK	80120	
A20MP8	8151-0013	4	1	WIRE 22AWG 1X22	92194	298
A20MP9	5000-9043	6	1	EXTRACTOR PIN	28480	5000-9043
A20MP10	5040-6843	2	1	PC BOARD EXTRACTOR	28480	5040-6843
A20MP11	1200-0539	7	1	SOCKET-IC 18-CONT DIP DIP-SLDR	09922	DILB18P-308T
A20MP12	3050-0010	2	1	WASHER-FL MTLC NO. 6 .147-IN-ID	76210	65
A20MP13	2360-0119	8	2	SCREW-MACH 6-32 .438-IN-LG PAN-HD-POZI	93907	
A20MP14	2420-0003	7	2	NUT-HEX-DBL-CHAM 6-32-THD .094-IN-THK	80120	
A20MP15	2190-0018	5	2	WASHER-LK HLCL NO. 6 .141-IN-ID	73734	
A2091	1854-0237	7	1	TRANSISTOR NPN SI TO-66 PD=20W FT=10MHZ	04713	
A20Q2	1855-0413	3	1	TRANSISTOR J-FET P-CHAN D-MODE TO-18 SI	17856	
A20Q4	1854-0232	2	1	TRANSISTOR NPN SI TO-39 PD=1W FT=15MHZ	04713	
A20Q5	1853-0038	4	1	TRANSISTOR PNP SI TO-39 PD=1W FT=100MHZ	04713	
A20Q6	1854-0404	0	1	TRANSISTOR NPN SI TO-18 PD=360MW	04713	
A20Q7	1853-0007	7	1	TRANSISTOR PNP 2N3251 SI TO-18 PD=360MW	04713	2N3251

**Indicates factory-selected value*

HP Part Number 85660-60206

A20 Main Coil Driver

Reference Designation	HP Part Number	CD	Qty	Description	Mfr Code	Mfr Part Number
A2098	1854-0022	8	1	TRANSISTOR NPN SI TO-39 PD=700MW	28480	1854-0022
A20Q9	1854-1030	C	1	TRANSISTOR-DUAL NPN TO-78 PD=750MW	04713	
A20Q9	1854-0221	9	0	TRANSISTOR-DUAL NPN (ALTERNATE FOR 1854-1030)	28480	1854-0221
A20910	1853-0007	7	1	TRANSISTOR PNP 2N3251 SI TO-18 PD=360MW	04713	2N3251
A20Q11	1853-0451	5	1	TRANSISTOR PNP 2N3799 SI TO-18 PD=360MW	04713	
A20Q12	1853-0012	4	1	TRANSISTOR PNP 2N2904A SI TO-39 PD=600MW	04713	2N2904A
A20Q13	1853-0451	5	1	TRANSISTOR PNP 2N3799 SI TO-18 PD=360MW	04713	
A20R5	0757-0440	7	1	RESISTOR 7.5K +-1% .125W TF TC=O+-100	19701	SFR25H
A20R6	0757-0440	7	1	RESISTOR 7.5K +-1% .125W TF TC=O+-100	19701	SFR25H
A20R7	0698-0083	a	1	RESISTOR 1.96K 1% .125W TF TC=O+-100	19701	SFR25H
A20R8	0698-3440	7	1	RESISTOR 196 1% .125W TF TC=O+-100	19701	SFR25H
A20R9	0757-0346	2	1	RESISTOR 10 +-1% .125W TF TC=O+-100	91637	CMF-55-1, T-l
A20R10	0757-0465	6	1	RESISTOR 100K +-1% .125W TF TC=O+-100	19701	SFR25H
A20R11	3698-3157	3	1	RESISTOR 19.6K 1% .125W TF TC=O+-100	19701	SFR25H
A20R12	0757-0442	9	1	RESISTOR 10K +-1% .125W TF TC=O+-100	19701	SFR25H
A20R13	3698-3440	7	1	RESISTOR 196 1% .125W TF TC=O+-100	19701	SFR25H
A20R14	0757-0401	0	1	RESISTOR 100 +-1% .125W TF TC=O+-100	19701	SFR25H
A20R15	0757-0421	4	1	RESISTOR 825 +-1% .125W TF TC=O+-100	19701	SFR25H
A20R16	3811-3440	9	1	RESISTOR 125 +-1% 25W PWN TC=O+-2	01686	ALN-25
A20R17	0698-3440	7	1	RESISTOR 196 1% .125W TF TC=O+-100	19701	SFR25H
A20R18	0757-0458	7	1	RESISTOR 51.1K +-1% .125W TF TC=O+-100	19701	SFR25H
A20R19	0757-0465	6	1	RESISTOR 100K +-1% .125W TF TC=O+-100	19701	SFR25H
A20R22	0757-0290	5	1	RESISTOR 6.19K +-1% .125W TF TC=O+-100	19701	SFR25H
A20R23	3757-0346	2	1	RESISTOR 10 +-1% .125W TF TC=O+-100	91637	CMF-55-1, T-l
A20R24	3811-2936	6	1	RESISTOR 15 +-0.1% .5W PN TC=O+-5	01686	R348
A20R25	2100-4020	8	1	RESISTOR-TRMR 2K 10% TF SIDE-ADJ 26-TRN	18612	1280-2K-10%
A20R26	1757-0438	3	1	RESISTOR 5.11K +-1% .125W TF TC=O+-100	19701	SFR25H
A20R27	0757-0438	3	1	RESISTOR 5.11K +-1% .125W TF TC=O+-100	19701	SFR25H
A20R28	1757-0467	8	1	RESISTOR 121K +-1% .125W TF TC=O+-100	19701	SFR25H
A20R29	1757-0346	2	1	RESISTOR 10 +-1% .125W TF TC=O+-100	91637	CMF-55-1, T-l
A20R30	1698-8025	4	1	RESISTOR 1.91K +-0.25% .125W TF TC=O+-50	19701	5033R
A20R31	1757-0402	1	1	RESISTOR 110 +-1% .125W TF TC=O+-100	19701	SFR25H
A20R32	1757-0458	7	1	RESISTOR 51.1K +-1% .125W TF TC=O+-100	19701	SFR25H
A20R33	0757-0428	1	1	RESISTOR 1.62K +-1% .125W TF TC=O+-100	19701	SFR25H
A20R34	2100-4020	8	1	RESISTOR-TRMR 2K 10% TF SIDE-ADJ 26-TRN	18612	1280-2K-10%
A20R35	1698-3153	9	1	RESISTOR 3.83K 1% .125W TF TC=O+-100	19701	SFR25H
A20R36	0698-3447	4	1	RESISTOR 422 1% .125W TF TC=O+-100	19701	SFR25H
A20R37	1757-0458	7	1	RESISTOR 51.1K +-1% .125W TF TC=O+-100	19701	SFR25H
A20R38	1698-5673	2	1	RESISTOR 3.9K +-1% .125W TF TC=O+-25	91637	CMF-55-1, T-9
A20R39	0698-3155	1	1	RESISTOR 4.64K 1% .125W TF TC=O+-100	19701	SFR25H
A20R40	1698-8420	3	1	RESISTOR 4.221: +-1% .125W TF TC=O+-25	19701	50331
A20R41	0757-0401	0	1	RESISTOR 100 +-1% .125W TF TC=O+-100	19701	SFR25H
A20R42	0757-0346	2	1	RESISTOR 10 +-1% .125W TF TC=O+-100	91637	CMF-55-l. T-l
A20TP1	1251-0600	0	1	CONNECTOR-SGL CONT PIN 1.14-MM-BSC-SZ SQ	27264	16-06-0034
A20TP2	1251-0600	0	1	CONNECTOR-SGL CONT PIN 1.14-MM-BSC-SZ SQ	27264	16-06-0034
A20TP3	1251-0600	0	1	CONNECTOR-SGL CONT PIN 1.14-MM-BSC-SZ SQ	27264	16-06-0034
A20TP4	1251-0600	0	1	CONNECTOR-SGL CONT PIN 1.14-MM-BSC-SZ SQ	27264	16-06-0034

**Indicates factory-selected value*

HP Part Number 85660-60206

A20 Main Coil Driver

Reference Designation	HP Part Number	C D	Qty	Description	Mfr Code	Mfr Part Number
A20TP5	1251-0600	0	1	CONNECTOR-SGL CONT PIN 1.14-MM-BSC-SZ SC	27264	16-06-0034
A20TP6	1251-0600	0	1	CONNECTOR-SGL CONT PIN 1.14-MM-BSC-SZ SC	27264	16-06-0034
A20U1	5081-8117	3	1	SCREEN 1826-0092 IC OPAMP	28480	5081-8117
A20VR1	1902-0680	7	1	DIODE-ZNR 1N827 6.2V 5% DO-7 PD=.4W TC=+	04713	1N827
A20VR2	1902-3404	9	1	DIODE-ZNR 82.5V 5% DO-7 PD=.4W TC=+.082%	04713	

**Indicates factory-selected value*

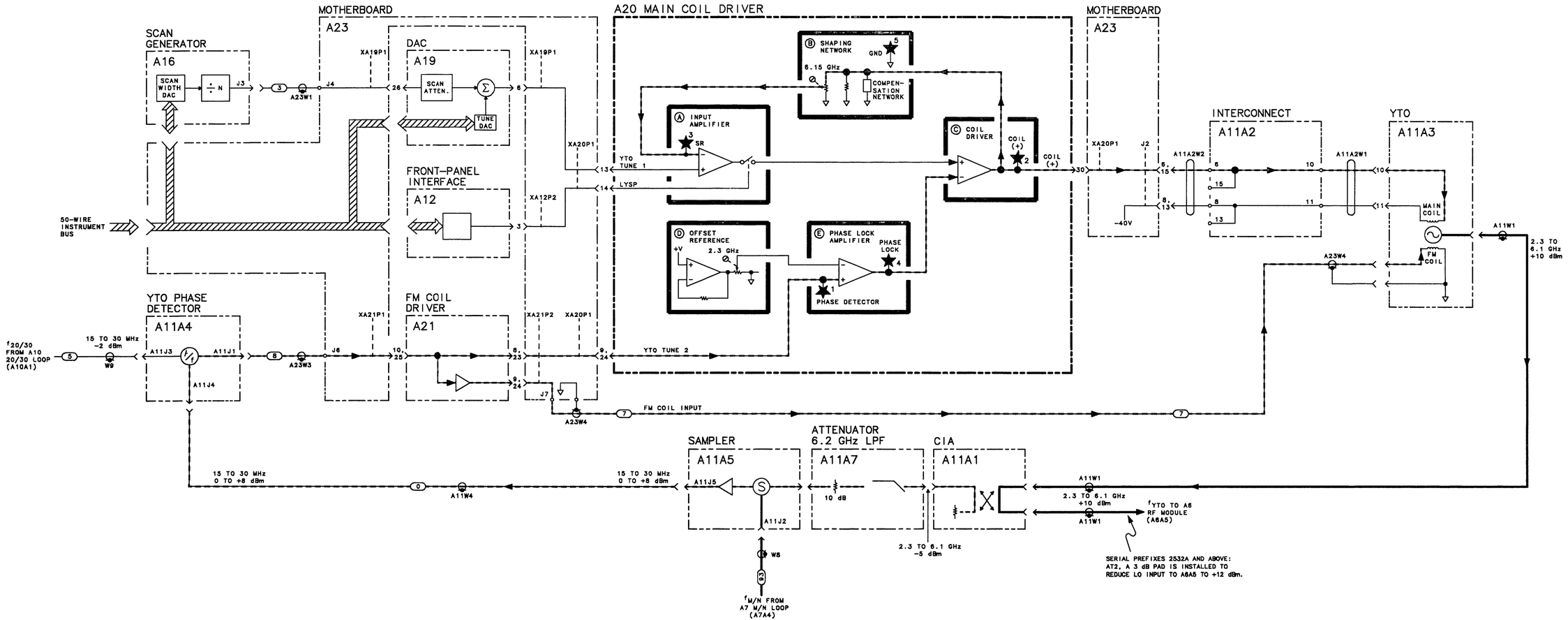
MOTHERBOARD
A23
SCAN GENERATOR
A16
SCAN WIDTH DAC
÷ N
J3
3
A23W1
J4
XA19P1
26
DAC
A19
SCAN ATTEN.
TUNE DAC
6
XA19P1
XA20P1
13
YTO TUNE 1
14
LYSP
FRONT-PANEL INTERFACE
A12
XA12P2
3
50-WIRE INSTRUMENT BUS
A20 MAIN COIL DRIVER
B SHAPING NETWORK
GND
5
6.15 GHz
COMPEN-SATION NETWORK
A INPUT AMPLIFIER
3
SR
C COIL DRIVER
COIL (+)
2
COIL (+)
30
D OFFSET REFERENCE
+V
2.3 GHz
E PHASE LOCK AMPLIFIER
PHASE LOCK
4
1
PHASE DETECTOR
MOTHERBOARD
A23
XA20P1
J2
8, 15
8, 13
-40V
INTERCONNECT
A11A2
A11A2W2
A11A2W1
6
15
8
13
10
11
YTO
A11A3
MAIN COIL
FM COIL
A11W1
2.3 TO 6.1 GHz +10 dBm
A23W4
YTO PHASE DETECTOR
A11A4
f20/30 FROM A10 20/30 LOOP (A10A1)
5
15 TO 30 MHz −2 dBm
W9
A11J3
A11J1
A11J4
8
A23W3
J6
XA21P1
10, 25
FM COIL DRIVER
A21
9, 23
9, 24
XA21P2
XA20P1
J7
A23W4
7
FM COIL INPUT
YTO TUNE 2
SAMPLER
A11A5
A11J5
A11J2
ATTENUATOR 6.2 GHz LPF
A11A7
10 dB
CIA
A11A1
15 TO 30 MHz 0 TO +8 dBm
0
A11W4
2.3 TO 6.1 GHz −5 dBm
A11W1
2.3 TO 6.1 GHz +10 dBm
fYTO TO A6 RF MODULE (A6A5)
W8
A3
fM/N FROM A7 M/N LOOP (A7A4)
SERIAL PREFIXES 2532A AND ABOVE:
AT2, A 3 dB PAD IS INSTALLED TO
REDUCE LO INPUT TO A6A5 TO +12 dBm.

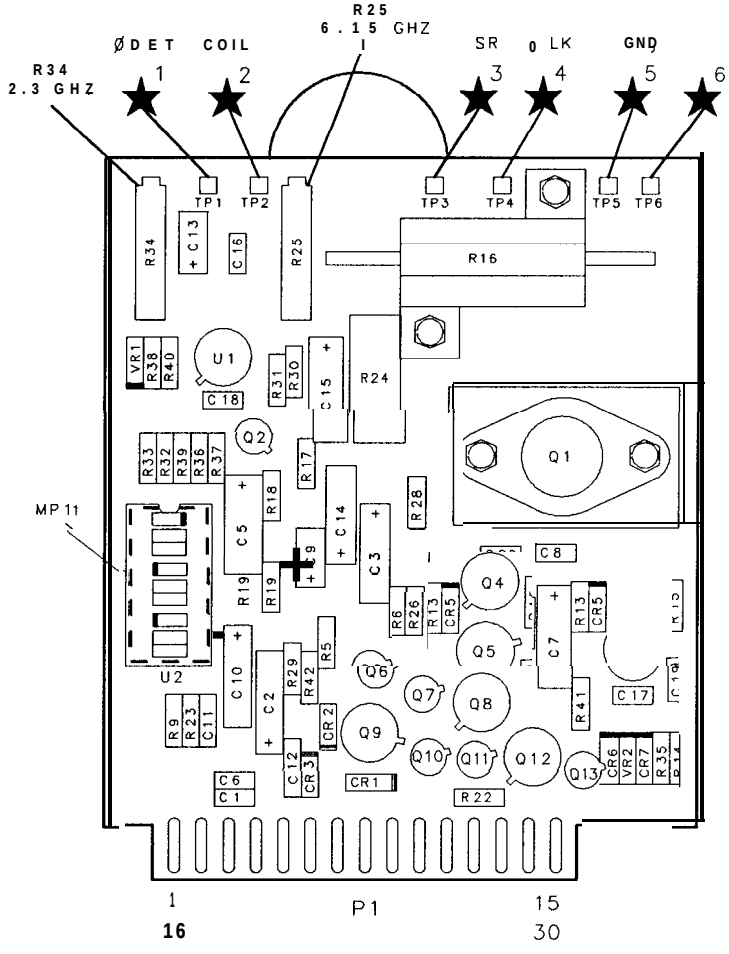

A20 Main Coil Driver Component Locations, 85660-60206

A20 MAIN COIL DRIVER
85660-60206
(SERIAL PREFIX: 2410A)

P1

PIN	SIGNAL	TO/FROM	FUNCTION BLOCK
1	+20V	A17P1-14,36	F
16	+20V	A17P1-14,36	F
2	+5.2V	A17P1-16,38	F
17	+5.2V	A17P1-16,38	F
3	-40V	A18P1-11,29	F
18	-40V	A18P1-11,29	F
4	-10V	A18P1-13,31	F
19	-10V	A18P1-13,31	F
5	GND		F
20	GND		F
6	GND		F
21	GND		F
7	GND		F
22	GND		F
8	NC		
23	NC		
9	YTO TUNE 2	A21P1-8	E
24	YTO TUNE 2	A21P1-8	E
10	YTO TUNE 2	A21P1-8	E
25	YTO TUNE 2	A21P1-8	E
11	GND		F
26	GND		F
12	GND		F
27	GND		F
13	YTO TUNE 1	A19P1-6	A
28	GND		F
14	LYSP	A12P2-3	A
29	GND		F
15	GND		F
30	COIL (+)	A11A3	C

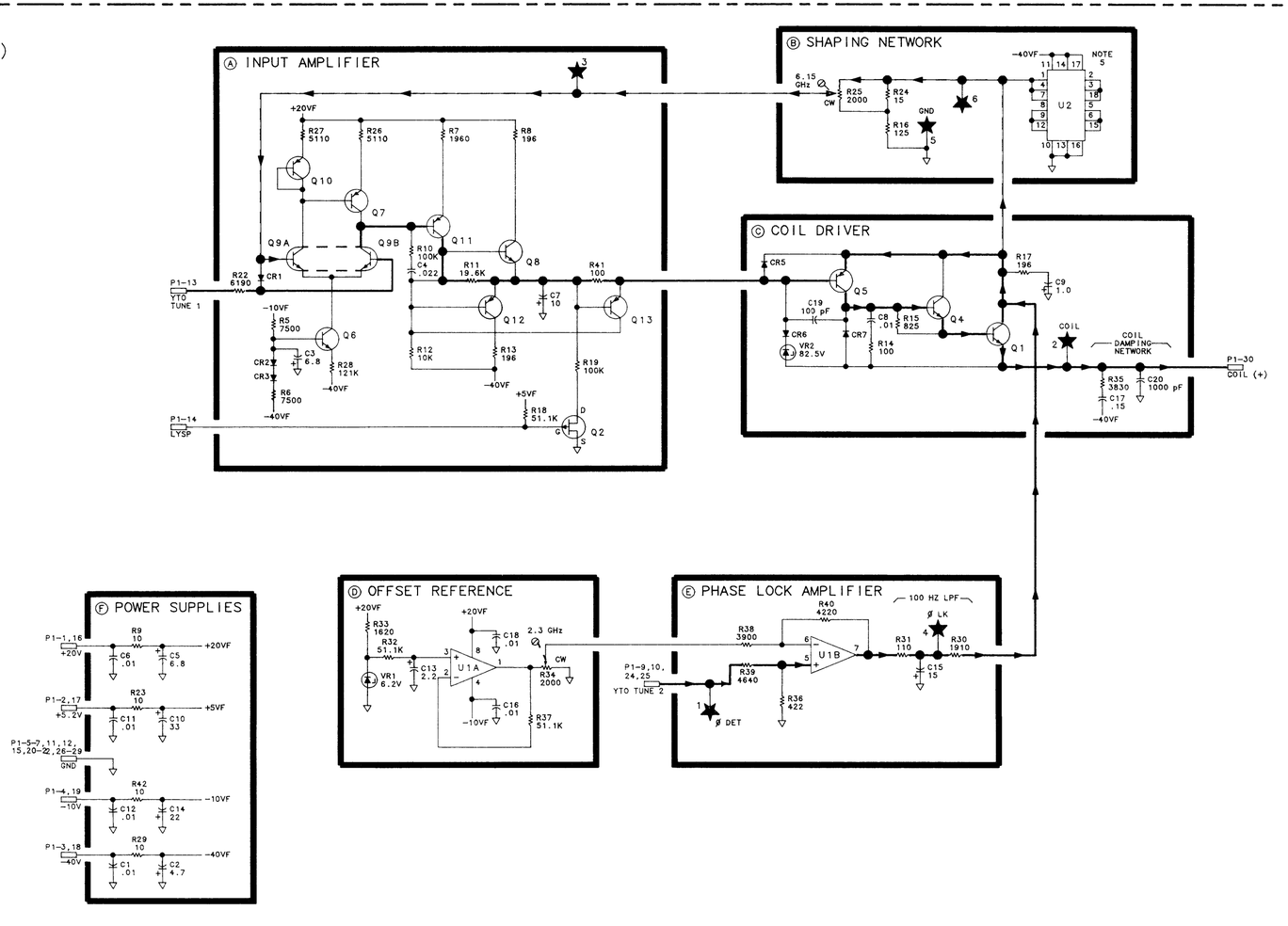

NOTES:

1. REFERENCE DESIGNATORS WITHIN THIS ASSEMBLY ARE ABBREVIATED. FOR COMPLETE REFERENCE DESIGNATION, PREFIX ABBREVIATION WITH ASSEMBLY DESIGNATION.
2. UNLESS OTHERWISE INDICATED: RESISTANCE IS IN OHMS (Ω). CAPACITANCE IS IN MICROFARADS (μF) INDUCTANCE IS IN MICROHENRIES (μH)
3. UNLESS OTHERWISE INDICATED: SIGNALS ENTER AT LEFT SIDE AND EXIT AT RIGHT SIDE OF FUNCTION BLOCKS.
4. MNEMONIC TABLE:

MNEMONIC	DESCRIPTION
LYSP	LOW-YTO SPAN

5. U2 IS A COMPENSATION NETWORK FOR THE YTO WITH FACTORY SELECTABLE COMPONENTS. THE TYPICAL CONFIGURATION IS:

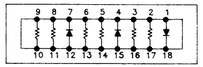

DIRECTION OF DIODES MAY BE DIFFERENT FROM DIAGRAM. ALSO, THERE MAY BE NO COMPONENTS BETWEEN PINS 7 AND 12, 8 AND 11, OR 9 AND 10.

A21

A21 FM Coil Driver, Circuit Description

The A21 FM Coil Driver performs two functions.

1. Separates the low-frequency component from the error voltage input (DET IN) and directs it to the A20 Main Coil Driver.
2. Provides drive current to the FM Coil of the YTO proportional to the high-frequency component of the error voltage input (DET IN).

Phase Detector Buffer Ⓐ

This buffer drives both the low-frequency (<100 Hz) portion of the error voltage input (DET IN) to be applied to the A20 Main Coil Driver and the high-frequency portion to be applied to the FM coil of the YTO.

100 Hz High-Pass Filter/Amplifier Ⓑ

This filter/amplifier separates the low-frequency (<100 Hz) signals from the input to be applied to the main coil of the YTO and amplifies the high-frequency signals to be applied to the FM Coil of the YTO.

Bias Stabilization Ⓓ

This circuit adjusts the dc current in Buffer Ⓒ to ensure there is not quiescent current applied to the YTO FM Coil.

Output Amplifier Ⓔ

Q1 and Q4 form a push-pull amplifier to provide drive current to the YTO FM Coil porportional to the high-frequency error voltage input (DET IN). This is done to tune the YTO frequency to a corrected output determined by the YTO Phase Lock Loop.

Matching Network Ⓕ

Provides impedance matching between the Output Amplifier and the YTO FM Coil to assure accurate tuning of the YTO frequency.

HP Part Number 85660-60040

A21 FM Coil Driver

Reference Designation	HP Part Number	C. (c)	Qty	Description	Mfr Code	Mfr Part Number
A21	85660-60040	f	1	BOARD ASSEMBLY, FM COIL DRIVER	28480	85660-60040
A21C1	0160-3879	i	1	CAPACITOR-FXD .01UF +-20% 100VDC CER	04222	SR201C103MAAH
A21C2	0180-0234	4	1	CAPACITOR-FXD 33uF 75 V WT-SLG-TA-ELCTLT	56289	109D336X0075F2-DYP
A21C3	0160-3879	7	1	CAPACITOR-FXD .01UF +-20% 100VDC CER	04222	SR201C103MAAH
A21C4	0180-1719	2	1	CAPACITOR-FXD 22uF 25 V WT-SLG-TA-ELCTLT	56289	109D226X9025C2-DYP
A21C5	0160-3879	7	1	CAPACITOR-FXD .01UF +-20% 100VDC CER	04222	SR201C103MAAH
A21C6	0180-0116	1	1	CAPACITOR-FXD 6.8UF+-10% 35VDC TA	56289	1500685X903582-DYS
A21C7	0160-4441	1	1	CAPACITOR-FXD .47UF +-10% 50VDC CER	04222	SR305C474KAAH
A21C8	0160-3879	7	1	CAPACITOR-FXD .01UF +-20% 100VDC CER	04222	SR201C103MAAH
A21C9	0160-3879	7	1	CAPACITOR-FXD .01UF +-20% 100VDC CER	04222	SR201C103MAAH
A21C10	0180-0491	F	1	CAPACITOR-FXD 10uF 25 V TA	56289	199D1112
A21C11	0180-0197	8	1	CAPACITOR-FXD 2.2UF+-10% 20VDC TA	56289	150D225X9020A2-DYS
A21C12	0180-0197	8	1	CAPACITOR-FXD 2.2UF+-10% 20VDC TA	56289	150D225X9020A2-DYS
A21C13	0160-3879	7	1	CAPACITOR-FXD .01UF +-20% 100VDC CER	04222	SR201C103MAAH
A21C14	0160-4084	8	1	CAPACITOR-FXD 0.1uF 50 V	56289	1C20X7R104M050B
A21C15	0160-3879	7	1	CAPACITOR-FXD .01UF +-20% 100VDC CER	04222	SR201C103MAAH
A21C16	0160-4084	8	1	CAPACITOR-FXD 0.1uF 50 V	56289	1C20X7R104M050B
A21C17	0160-3879	7	1	CAPACITOR-FXD .01UF +-20% 100VDC CER	04222	SR201C103MAAH
A21C18	0160-3879	7	1	CAPACITOR-FXD .01UF +-20% 100VDC CER	04222	SR201C103MAAH
A21C19	0180-1719	2	1	CAPACITOR-FXD 22uF 25 V WT-SLG-TA-ELCTLT	56289	109D226X9025C2-DYP
A21C20	0160-3879	7	1	CAPACITOR-FXD .01UF +-20% 100VDC CER	04222	SR201C103MAAH
A21C21	0160-4084	a	1	CAPACITOR-FXD 0.1uF 50 V	56289	1C20X7R104M050B
A21C22	0140-0194	1	1	CAPACITOR-FXD 110PF +-5% 300VDC MICA	09023	CD15FD111J03
A21C23	0160-2206	2	1	CAPACITOR-FXD 160PF +-5% 300VDC MICA	09023	CD15FD161J03
A21C24	0160-4084	a	1	CAPACITOR-FXD 0.1uF 50 V	56289	1C20X7R104M050B
A21CR1	1901-0040	1	1	DIODE-SWITCHING 30V 50MA 2NS DO-35	71468	
A21CR2	1901-0040	1	1	DIODE-SWITCHING 30V 50MA 2NS DO-35	71468	
A21L1	9100-2259	a	1	INDUCTOR RF-CH-MLD 1.5UH +-10% .105D	99800	1025-24
A21MP1				NOT ASSIGNED		
A21MP3	1200-0173	5	1	INSULATOR-XSTR DAP-GL	07047	A-10001 DAP
A21MP4	1205-0011	0	1	HEAT SINK TO-5/TO-39-CS	98978	TXBF-032-025B
A21MP5	1205-0037	0	1	HEAT SINK TO-18-CS	98978	TXBF-019-0258
A21MP6	5000-9043	6	1	EXTRACTOR PIN	28480	5000-9043
A21MP7	5040-6843	2	1	PC BOARD EXTRACTOR	28480	5040-6843
A21Q1	1854-0013	7	1	TRANSISTOR NPN 2N2218A SI TO-5 PD=800MW	27014	2N2218A
A21Q2	1854-0404	0	1	TRANSISTOR NPN SI TO-18 PD=360MW	04713	
A21Q3	1854-0477	7	1	TRANSISTOR NPN 2N2222A SI TO-18 PD=500MW	04713	2N2222A
A21Q4	1853-0012	4	1	TRANSISTOR PNP 2N2904A SI TO-39 PD=600MW	04713	2N2904A
A21Q5	1854-0477	7	1	TRANSISTOR NPN 2N2222A SI TO-18 PD=500MW	04713	2N2222A
A21Q6	1854-0023	9	1	TRANSISTOR NPN SI TO-18 PD=360MW	25403	
A21Q7	1854-0247	9	1	TRANSISTOR NPN SI TO-39 PD=1W FT=800MHZ	04713	
A21Q8	1853-0451	5	1	TRANSISTOR PNP 213799 SI TO-18 PD=360MW	04713	
A21R1	1757-0346	2	1	RESISTOR 10 +-1% .125W TF TC=O+-100	91637	CMF-55-1, T-l
A21R2	1757-0346	2	1	RESISTOR 10 +-1% .125W TF TC=O+-100	91637	CMF-55-1, T-l
A21R3	0757-0346	2	1	RESISTOR 10 +-1% .125W TF TC=O+-100	91637	CMF-55-1. T-l
A21R4	0757-0401	0	1	RESISTOR 100 +-1% .125W TF TC=O+-100	19701	SFR25H
A21R5	0757-0458	7	1	RESISTOR 51.1K +-1% .125W TF TC=O+-100	19701	SFR25H

**Indicates factory-selected value*

HP Part Number 85660-60040

A21 FM Coil Driver

Reference Designatior	HP Part Number	C- D	Qty	Description	Mfr Code	Mfr Part Number
A21R6	0757-0441	8	1	RESISTOR 8.251: +-1% .125W TF TC=O+-100	19701	SFR25H
A21R7	0698-0083	8	1	RESISTOR 1.96K 1% .125W TF TC=O+-100	19701	SFR25H
A21R8	0698-0083	8	1	RESISTOR 1.96K 1% .125W TF TC=O+-100	19701	SFR25H
A21R9	0698-3155		1	RESISTOR 4.641: 1% .125W TF TC=O+-100	19701	SFR25H
A21R10	0698-3155		1	RESISTOR 4.641: 1% .125W TF TC=O+-100	19701	SFR25H
A21R11	0698-3155	1	1	RESISTOR 4.64K 1% .125W TF TC=O+-100	19701	SFR25H
A21R12	0757-0416	7	1	RESISTOR 511 +-1% .125W TF TC=O+-100	19701	SFR25H
A21R13	0698-3150	6	1	RESISTOR 2.37K 1% .125W TF TC=O+-100	19701	SFR25H
A21R14	0757-0442	C	1	RESISTOR 10K +-1% .125W TF TC=O+-100	19701	SFR25H
A21R15	0757-0439	4	1	RESISTOR 6.81K +-1% .125W TF TC=O+-100	19701	SFR25H
A21R16	0757-0441	8	1	RESISTOR 8.25K +-1% .125W TF TC=O+-100	19701	SFR25H
A21R17	0757-0447	4	1	RESISTOR 16.2K +-1% .125W TF TC=O+-100	19701	SFR25H
A21R18	0698-0083	8	1	RESISTOR 1.96K 1% .125W TF TC=O+-100	19701	SFR25H
A21R19	0698-0083	8	1	RESISTOR 1.96K 1% .125W TF TC=O+-100	19701	SFR25H
A21R20	0757-0441	a	1	RESISTOR 8.251: +-1% .125W TF TC=O+-100	19701	SFR25H
A21R21	0698-3438	3	1	RESISTOR 147 1% .125W TF TC=O+-100	19701	SFR25H
A21R22	0757-0394	C	1	RESISTOR 51.1 +-1% .125W TF TC=O+-100	19701	SFR25H
A21R23	0698-3447	4	1	RESISTOR 422 1% .125W TF TC=O+-100	19701	SFR25H
A21R24	0698-3429	2	1	RESISTOR 19.6 1% .125W TF TC=O+-100	19701	SFR25H
A21R25	0757-0420	3	1	RESISTOR 750 +-1% .125W TF TC=O+-100	19701	SFR25H
A21R26	0686-1825	3	1	RESISTOR 1.8K 5% .5W CC TC=0+647	01121	EB1825
A21R27	0757-0420	3	1	RESISTOR 750 +-1% .125W TF TC=O+-100	19701	SFR25H
A21R28	0757-0346	i	1	RESISTOR 10 +-1% .125W TF TC=O+-100	91637	CMF-55-1. T-l
A21R29	0757-0346	i	1	RESISTOR 10 +-1% .125W TF TC=O+-100	91637	CMF-55-1, T-l
A21R30	0757-0346	2	1	RESISTOR 10 +-1% .125W TF TC=O+-100	91637	CMF-55-1, T-l
A21R31	0757-0346	2	1	RESISTOR 10 +-1% .125W TF TC=O+-100	91637	CMF-55-1. T-l
A21R32	0757-0802	5	1	RESISTOR 162 +-1% .5W TF TC=O+-100	19701	5053R
A21R33	0757-0802	5	1	RESISTOR 162 +-1% .5W TF TC=O+-100	19701	5053R
A21R34	0698-3442	9	1	RESISTOR 237 1% .125W TF TC=O+-100	19701	SFR25H
A21R35	0757-0420	3	1	RESISTOR 750 +-1% .125W TF TC=O+-100	19701	SFR25H
A21TP1	1251-0600	C	1	CONNECTOR-SGL CONT PIN 1.14-MM-BSC-SZ SQ	27264	16-06-0034
A21TP2	1251-0600	C	1	CONNECTOR-SGL CONT PIN 1.14-MM-BSC-SZ SQ	27264	16-06-0034
A21U1	1826-1058	3	1	IC OP AMP GP 8-TO-99 PKG	06665	OP-02CJ

**Indicates factory-selected value*

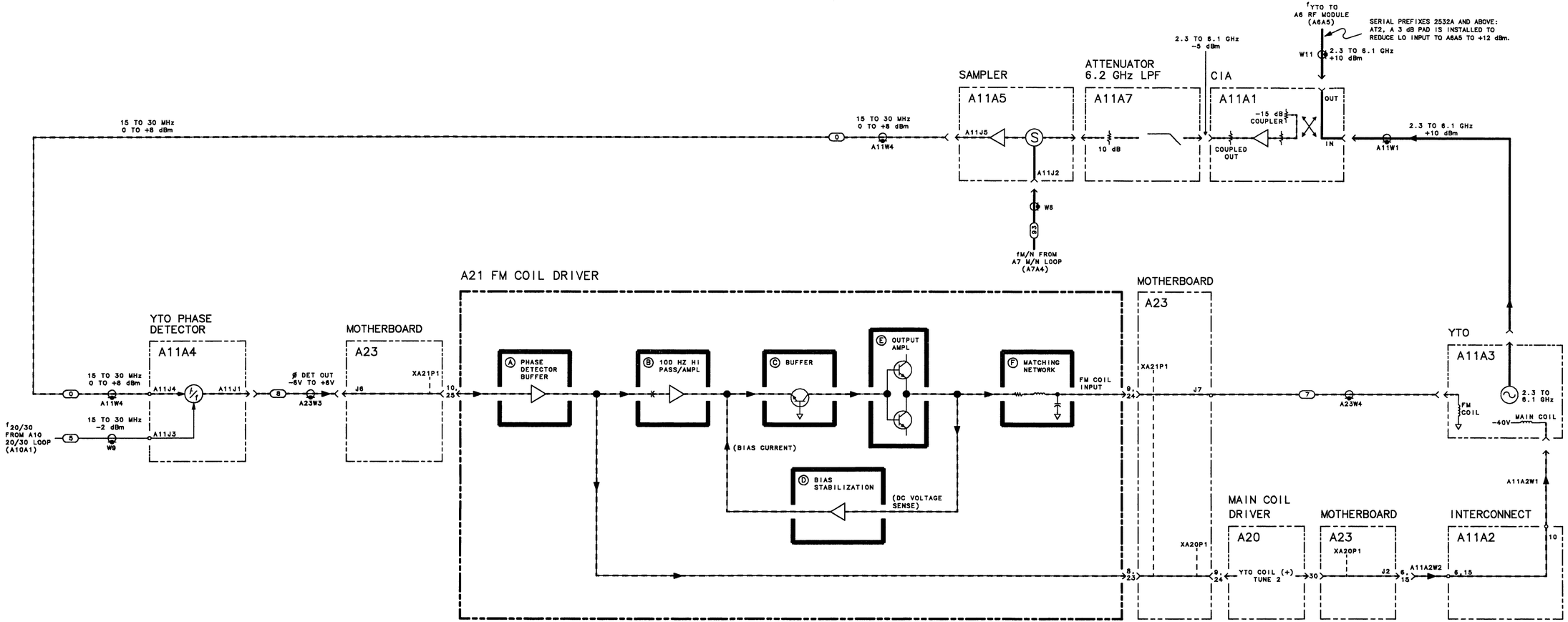

A21

A21 FM COIL DRIVER, BLOCK DIAGRAM

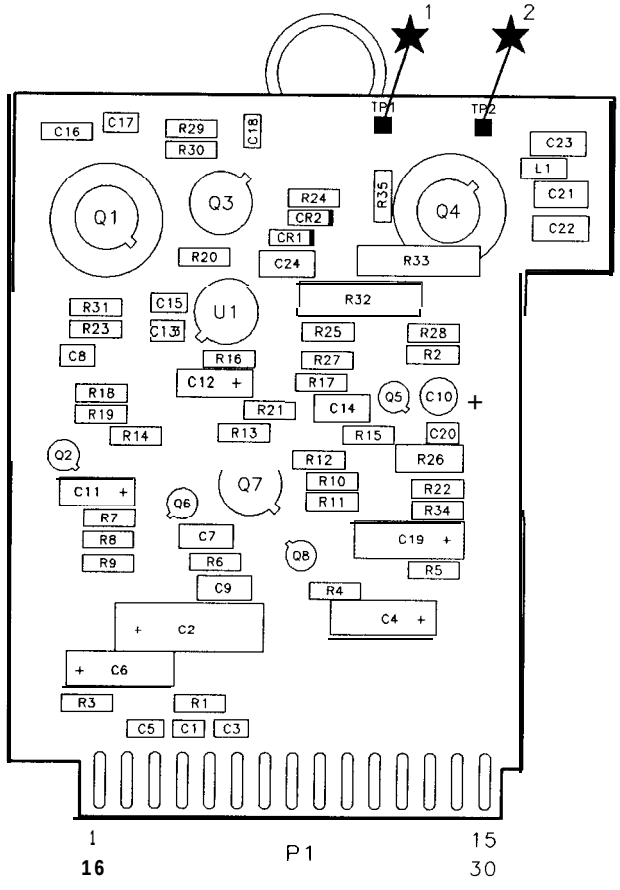

A21 FM Coil Driver Component Locations, 85660-60040

A21 FM COIL DRIVER
85660-60040
(SERIAL PREFIX: 2410A)

P1

PIN	SIGNAL	TO/FROM	FUNCTION BLOCK
1 16	+20V	A17P1-14,36	G
2 17	+5.2V	A17P1-16,38	NC
3 18	-40V	A18P1-11,29	G
4 19	-10V	A18P1-13,31	G
5 20	GND		G
6 21	GND		G
7 22	NC		
8 23	YTO TUNE 2	A20P1-9,24	A
9 24	FM COIL INPUT	A11A3	F
10 25	ø DET IN	A11J1	A
11 26	GND		G
12 27	NC GND		NC
13 28	GND		NC
14 29	NC		
15 30	NC		

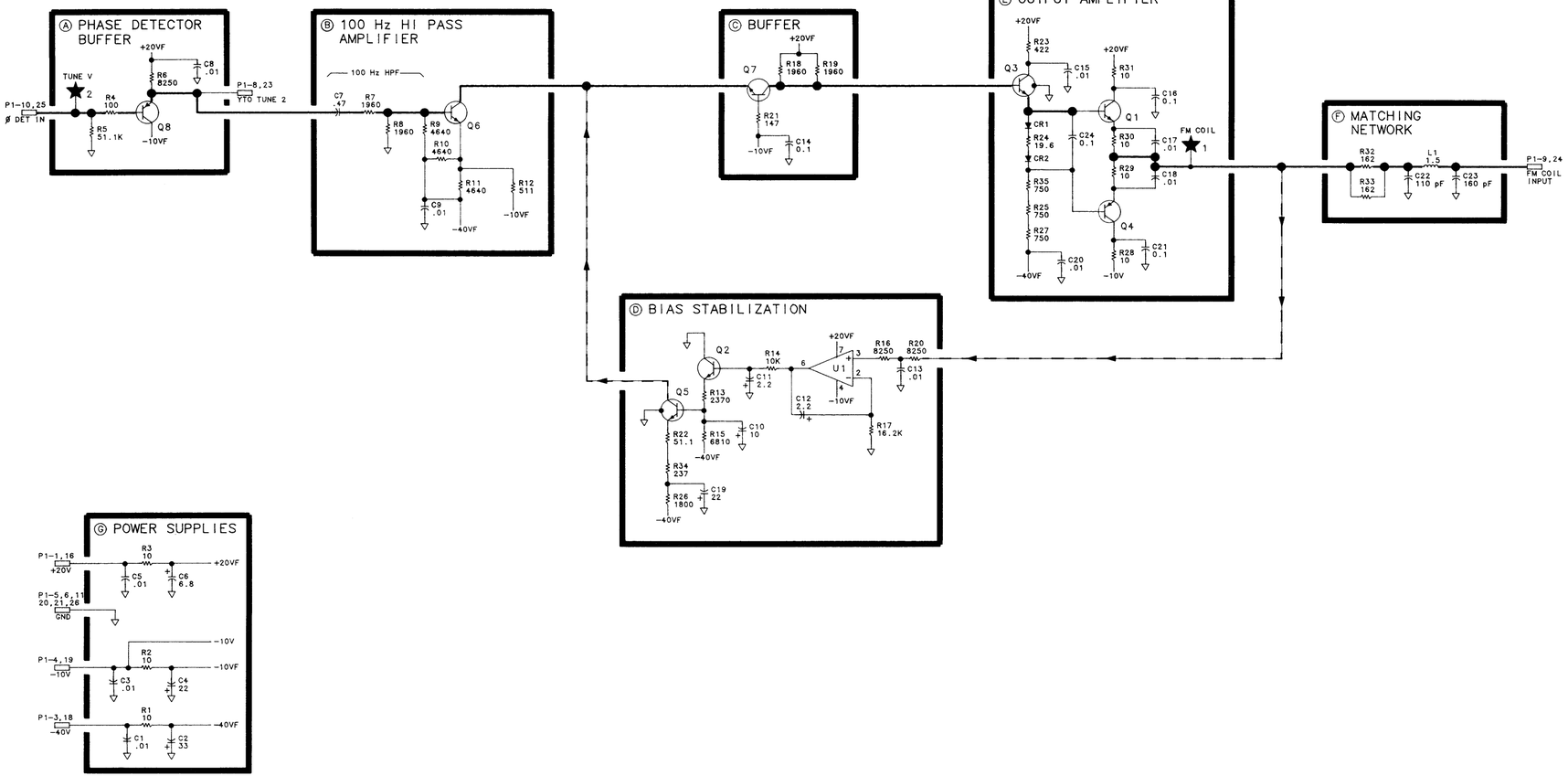

NOTES:

1. REFERENCE DESIGNATORS WITHIN THIS ASSEMBLY ARE ABBREVIATED. FOR COMPLETE REFERENCE DESIGNATION, PREFIX ABBREVIATION WITH ASSEMBLY DESIGNATION.
2. UNLESS OTHERWISE INDICATED: RESISTANCE IS IN OHMS (Ω). CAPACITANCE IS IN MICROFARADS (μF). INDUCTANCE IS IN MICROHENRIES (μH).
3. UNLESS OTHERWISE INDICATED: SIGNALS ENTER AT LEFT SIDE AND EXIT AT RIGHT SIDE OF FUNCTION BLOCKS.

A22

A22 10 MHz Frequency Standard

The 10 MHz Frequency Standard provides a stable frequency reference signal for the 100 MHz Reference Loop to phase lock to. The 100 MHz Reference Loop (A7A1 Reference Phase Detector and A7A2 100 MHz VCXO) in turn provides stable frequency reference signals of 10 MHz, 20 MHz, and 100 MHz to lock the remaining phased locked loops-A7 M/N Reference, A10 20/30 Synthesizer, and A6A9 Phase Lock.

Alternately, the rear-panel FREQ REFERENCE jumper cable can be removed and an external 5 Mhz or 10 MHz reference signal can be connected to the EXTERNAL FREQUENCY REFERENCE INPUT. The performance of the spectrum analyzer will be degraded unless the frequency reference phase noise and spurious signals are less than -140 dBc single sideband (1 Hz) referred to 10 MHz at a 100 Hz to 10 kHz offset.

The A22A1 Regulator Board assembly provides +12 V regulated voltage to the A22A2 Quartz Crystal Oscillator. Voltage Regulator IC, U1, provides +12 V resolution with Cl and C3 providing compensation and CR1 providing reverse-bias protection.

The A22A2 Quartz Crystal Oscillator is an extremely stable, compact, low-power source of 10 MHz. It has a very fast warm-up time, exhibits excellent temperature characteristics, and has low phase noise and power consumption.

The A22A2 Quartz Crystal Oscillator has the ability to be adjusted over a range of 20 Hz (2×10^{-6}), yet the control is sensitive enough to allow adjustment to better than 0.1 Hz (1×10^{-8}).

A22 10 MHz Frequency Standard Replacement

Note For location of hardware and cables referred to in this procedure, see Figure 1.

Removal

1. Remove ac line cords and RF Section bottom cover.
2. Remove All YTO Loop by removing three screws as indicated by instructions on top of YTO Loop assembly. Disconnect cable connector ②.
3. Release A22 10 MHz Standard by removing two screws ①.
4. When removing 10 MHz Standard, disconnect 87 (gray/violet) cable and 6-pin connector from behind.

Installation

5. When installing new 10 MHz Standard, check that rear studs are supported by both rear rubber mounts and reconnect 87 (gray/violet) cable and 6-pin connector (red wire to rear pin). Fasten 10 MHz Standard to RF Section with two screws ①.
6. Replace All YTO Loop. Replace three screws removed in step 2 and reconnect cable connector ②.
7. Replace RF Section bottom cover and reconnect ac line cords.

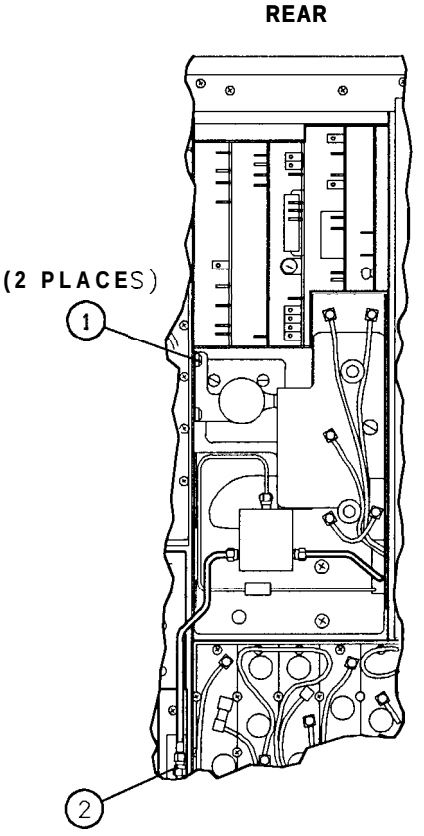

Figure 1. A22 10 MHz Standard Replacement

HP Part Number 5062-1916

A22 10 MHz Frequency Standard

Reference Designation	HP Part Number	C D	Qty	Description	Mfr Code	Mfr Part Number
A22	5062-1916	€	1	10 MHz FREQUENCY STANDARD ASSEMBLY (SERIAL PREFIX: 2728~)	2848C	5062-1916
A22A1	5062-1909	7	1	BOARD ASSEMBLY, 10 MHz FREQUENCY STANDARD REGULATOR (SERIAL NUMBERS: 2728A04255-2747A05706)	28480	5062-1909
A22A1C1	0180-2205	3	1	CAPACITOR-FXD .33UF +-10% 35VDC TA	28480	0180-2205
A22A1C2	0180-0197	a	1	CAPACITOR-FXD 2.2UF +-10% 20VDC TA	28480	0180-0197
A22A1CR1	1901-0518	a	1	DIODE-SCHOTTKY SM SIG	28480	1901-0518
A22A1J1	1251-2035	9	1	CONNECTOR-PC EDGE 15-CONT/ROW 2-ROWS	28480	1251-2035
A22A1J2	1250-0543	a	1	CONNECTOR-RF SM-SNP M PC 50-OHM	28480	1250-0543
A22A1J3	1252-2162	5	1	CONNECTOR 5-PIN/ROW l-ROW	28480	1252-2162
A22A1MP2	5021-7433	a	1	SHOCK-MOUNT STANDOFF	28480	5021-7433
A22A1U1	1826-0275	4	1	IC V RGLTR-FXD-POS 11.5/12.5V TO-92 PKG	28480	1826-0275
A22A1	5062-4837	6	1	BOARD ASSEMBLY, 10 MHz FREQUENCY STANDARD REGULATOR (SERIAL NUMBERS: 2747A05707 AND ABOVE)	28480	5062-4837
A22A1C1	1180-2205	3	1	CAPACITOR-FXD .33UF +-lo% 35VDC TA	28480	0180-2205
A22A1C2	)180-0197	a	1	CAPACITOR-FXD 2.2UF +-10% 20VDC TA	28480	0180-0197
A22A1C3	)180-0116	1	1	CAPACITOR-FXD 6.8UF 35V TA	28480	0180-0116
A22A1C4	)160-3097	1	1	CAPACITOR-FXD .47UF 50V CER	28480	0160-3097
A22A1CR1	1901-0518	8	1	DIODE-SCHDTTKY SM SIG	28480	1901-0518
A22A1J1	1251-2035	9	1	CONNECTOR-PC EDGE 15-CONT/ROW 2-ROWS	28480	1251-2035
A22A1J2	1250-0543	B	1	CONNECTOR-RF SM-SNP M PC 50-OHM	28480	1250-0543
A22A1J3	.252-2162	5	1	CONNECTOR 5-PIN/ROW l-ROW	28480	1252-2162
A22A1L1	)140-0400	1	1	INDUCTOR 8.2UH 5%	28480	9140-0400
A22A1MP2	5021-7433	B	1	SHOCK-MOUNT STANDOFF	28480	5021-7433
A22A1U1	.826-0275	4	1	IC V RGLTR-FXD-POS 11.5/12.5V TO-92 PKG	28480	1826-0275
A22A2	.0811-60111	3	1	OSCILLATOR, 10 MHZ QUARTZ CRYSTAL SEE HP 10811A/B QUARTZ CRYSTAL OSCILLATOR OPERATING AND SERVICE MANUAL, PART NUMBER 10811-90002.	28480	10811-60111
A22MP1	5021-7432	7	1	TOP COVER/BRACKET	28480	5021-7432
A22W1	5062-1922	4	1	CABLE ASSEMBLY, WIRE HARNESS, 5-WIRE (A2253 TO A23J3) (SERIAL PREFIXES: 2728A-2747A)	28480	5062-1922
A22W1	5062-6449	3	1	CABLE ASSEMBLY, WIRE HARNESS, 5-WIRE (A2253 TO A23J3) (SERIAL PREFIX:2748A)	28480	5062-6449

**Indicates factory-selected value*

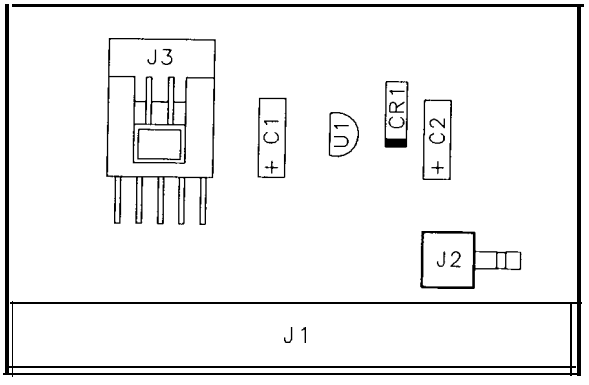

A22A1 **10 MHz FREQUENCY STANDARD REGULATOR, COMPONENT LOCATION** **5062-I 909**

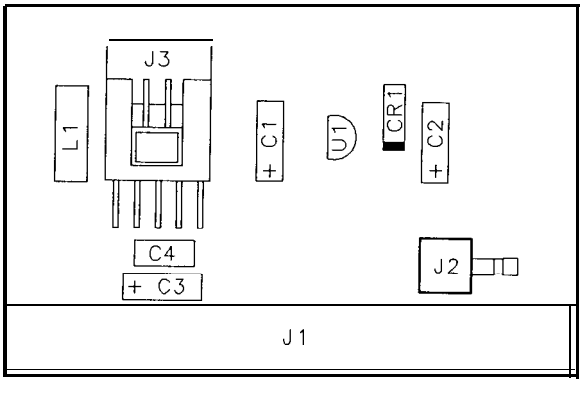

A22A1 **10 MHz FREQUENCY STANDARD REGULATOR, COMPONENT LOCATION** **5062-4837**

A22A1 Frequency Standard Regulator Component Locations, 5062-1909, 5062-4837

J3

PIN	SIGNAL	TO/FROM
1	GND	
2	+22V SWITCHED	A17P1-41
3	OVEN MONITOR	A12P2-2
4	+22V	A8P1-12,30
5	GND	

A22 10MHz FREQUENCY STANDARD ASSEMBLY
5062-1916 (SERIAL PREFIX: 2728A)

A22A1 10MHz FREQUENCY STANDARD REGULATOR
5062-1909 (SERIAL NUMBERS: 2728A04255-2747A05706)
5062-4837 (SERIAL NUMBERS: 2747A05707 AND ABOVE)

NOTES:

1. REFERENCE DESIGNATORS WITHIN THIS ASSEMBLY ARE ABBREVIATED. FOR COMPLETE REFERENCE DESIGNATION, PREFIX ABBREVIATION WITH ASSEMBLY DESIGNATION.
2. UNLESS OTHERWISE INDICATED: RESISTANCE IS IN OHMS (Ω) CAPACITANCE IS IN MICROFARADS (UF) INDUCTANCE IS IN MICROHENRIES (UH)
3. UNLESS OTHERWISE INDICATED: SIGNALS ENTER AT LEFT SIDE AND EXIT AT RIGHT SIDE OF FUNCTION BLOCKS.
4. A22A1 PART NUMBER CHANGED FROM 5062-1909 TO 5062-4837 WHEN ADDITIONAL FILTERING WAS ADDED TO REDUCE SPURS. ON 5062-4837, SERIES INDUCTOR, L1, AND BYPASS CAPACITORS. C3 AND C4, WERE ADDED TO THE +22V SUPPLY LINE.

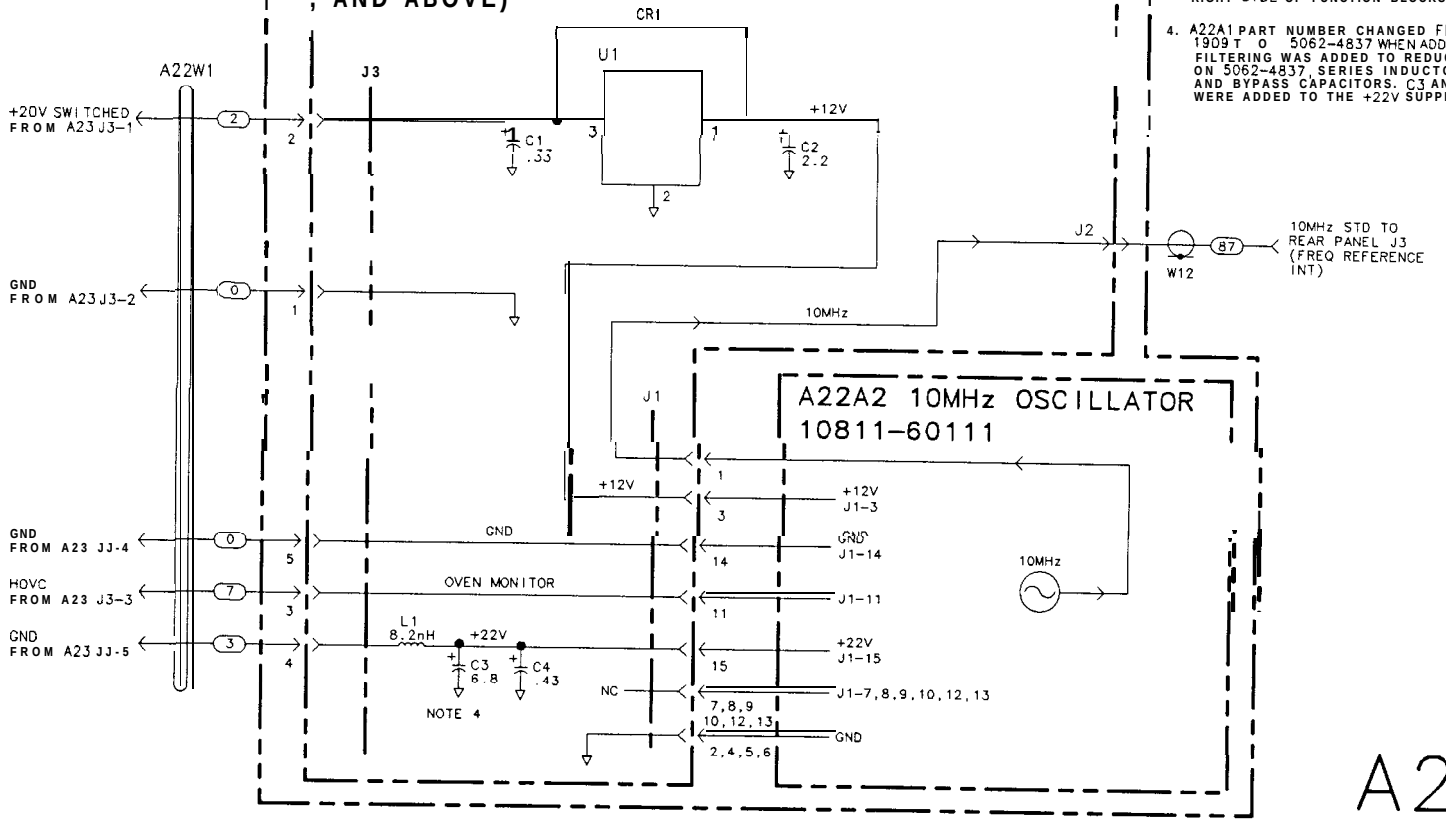

A22

A22 10 MHz FREQUENCY STANDARD REGULATOR, SCHEMATIC DIAGRAM

HP Part Number 85660-60041

A23 Motherboard

Reference Designation	HP Part Number	CD	Qty	Description	Mfr Code	Mfr Part Number
A23	85660-60041	7	1	BOARD ASSEMBLY, MOTHERBOARD (SERIAL PREFIX: 2410A-2950A)	28480	85660-60041
A23C1	0180-0452	8	1	CAPACITOR-FXD .031F +75-10% 25VDC AL (MUST BE ORDERED SEPARATELY)	28480	0180-0452
A23C2	0180-0454	0	1	CAPACITOR-FXD 4200UF +75-10% 75VDC AL (MUST BE ORDERED SEPARATELY)	28480	0180-0454
A23C3	0180-0453	9	1	CAPACITOR-FXD 8700UF +75-10% 40VDC AL (MUST BE ORDERED SEPARATELY)	28480	0180-0453
A23C4	0180-2798	9	1	CAPACITOR-FXD .03F +100-10% 20VDC AL (MUST BE ORDERED SEPARATELY)	28480	0180-2798
A23C5	0160-3879	7	1	CAPACITOR-FXD .01UF +-20% 100VDC CER	04222	SR201C103MAAH
A23C6	0160-0127	2	1	CAP-FXD 1uF 50 V	04222	SR835E105MAAH
A23C7	0170-0073	8	1	CAPACITOR-FXD 1UF 600V (400HZ OPTION ONLY)	28480	
A23CR1	1901-0743	1	1	DIODE-PWR RECT 1N4004 400V 1A DO-41	71744	1N4004
A23CR2	1901-0050	3	1	DIODE-SWITCHING 80V 200MA 2NS DO-35	9N171	1N4150
A23DS1	1990-0517	4	1	LED-LAMP LUM-INT=3MCD IF=20MA-MAX BVR=5V	28480	5082-4655
A23J2	1251-5799	8	1	CONN-POST TYPE .100-PIN-SPCG 20-CONT	76381	3428-2303
A23J3	1252-2689	1	1	CONN-HEADER, VERTICAL, 6-PIN	28480	1252-2689
A23K1	0490-0618	5	1	RELAY 2C 24VDC-COIL 5A 115VAC	77342	R40-E0161-1
A23L1	85660-80007	7	1	INDUCTOR P/S FILTER	28480	85660-80007
A23L2	85660-80007	7	1	INDUCTOR P/S FILTER	28480	85660-80007
A23L3	85660-80007	7	1	INDUCTOR P/S FILTER	28480	85660-80007
A23L4	85660-80007	7	1	INDUCTOR P/S FILTER	28480	85660-80007
A23L5	85660-80007	7	1	INDUCTOR P/S FILTER	28480	85660-80007
A23L6	85660-80007	7	1	INDUCTOR P/S FILTER	28480	85660-80007
A23L7	85660-80007	7	1	INDUCTOR P/S FILTER	28480	85660-80007
A23L8	85660-80007	7	1	INDUCTOR P/S FILTER	28480	85660-80007
A23MP1				NOT ASSIGNED		
A23MP2	0380-0076	6	4	SPACER-RVT-ON .5-IN-LG .152-IN-ID	00866	
A23MP3	0590-1491	6	11	THREADED INSERT-STDF 4-40 .156-IN-LG	46384	KFE-440-5-ET
A23MP4	2200-0105	4	2	SCREW SM440 .312 (MUST BE ORDERED SEPARATELY)	28480	2200-0105
A23MP5	0590-0519	7	14	THREADED INSERT-NUT 4-40 .062-IN-LG STL	46384	KF2-440-ET
A23MP6	85660-00026	2	1	SHOCK-MOUNT, BOTTOM (MUST BE ORDERED SEPARATELY)	28480	85660-00026
A23MP7	1520-0205	2	2	SHOCK-MOUNT. .31HG (MUST BE ORDERED SEPARATELY)	28480	1520-0205
A23MP8	85660-20093	5	2	STANDOFF-YTO CASTING SUPPORT	28480	85660-20093
A23MP9	0890-0324	8	1	TUBING-FLEX .032-ID TFE .012-WALL	09795	II-TW,FR-1
A23MP10	0890-0324	8	1	TUBING-FLEX .032-ID TFE .012-WALL	09795	II-TW,FR-1
A23MP11	0460-0778	5	1	TAPE PC, 6.85IN (MUST BE ORDERED SEPARATELY)	28480	0460-0778
A23MP12	85660-00027	3	1	HEAT SINK INSULATOR (MUST BE ORDERED SEPARATELY)	28480	85660-00027
A23MP13	85660-20061	7	1	TRANSISTOR HEAT SINK (MUST BE ORDERED SEPARATELY)	28480	85660-20061
A23MP14	0340-0923	8	10	INSULATOR, SPACER, .188L .115ID (MUST BE ORDERED SEPARATELY)	28480	0340-0923

**Indicates factory-selected value*

HP Part Number 85660-60041

A23 Motherboard

Reference Designation	HP Part Number	C D	Qty	Description	Mfr Code	Mfr Part Number
A23MP15	2200-0111	2	10	SCREW SM440 .500 PNPD (MUST BE ORDERED SEPARATELY)	28480	2200-0111
A23MP16	0340-1114	1	5	INSULATOR, TRANSISTOR TO-3ADH (MUST BE ORDERED SEPARATELY)	28480	0340-1114
A23MP17	2680-0129	8	8	SCREW SM1032 .312 PNPD (MUST BE ORDERED SEPARATELY)	28480	2680-0129
A23P1	1251-0600	0	1	CONNECTOR-SGL CONT PIN 1.14-MM-BSC-SZ SQ	27264	16-06-0034
A23P2	1251-0600	0	1	CONNECTOR-SGL CONT PIN 1.14-MM-BSC-SZ SQ	27264	16-06-0034
A23P3	1251-0600	0	1	CONNECTOR-SGL CDNT PIN 1.14-MM-BSC-SZ SQ	27264	16-06-0034
A23P4	1251-0600	0	1	CONNECTOR-SGL CONT PIN 1.14-MM-BSC-SZ SQ	27264	16-06-0034
A23P7	0360-1788	7	1	CONNECTOR-SGL CONT PIN .045-IN-BSC-SZ SQ	04574	
A23P8	0360-1788	7	1	CONNECTOR-SGL CDNT PIN .045-IN-BSC-SZ SQ	04574	
A23P9	0360-1788	7	1	CONNECTOR, SINGLE MALE SQ.045 (400HZ OPTION ONLY)	28480	
A23Q1	1854-0618	8	1	TRANSISTOR NPN SI DARL TO-3 PD=150W (MUST BE ORDERED SEPARATELY)	04713	MJ3000
A23Q2	1854-0294	0	1	TRANSISTOR NPN SI TO-3 PD=115W FT=500KHZ (MUST BE ORDERED SEPARATELY)	28480	1854-0294
A23Q3	1854-0618	8	1	TRANSISTOR NPN SI DARL TO-3 PD=150W (MUST BE ORDERED SEPARATELY)	04713	MJ3000
A23Q4	1854-0679	1	1	TRANSISTOR NPN 2N5885 SI TO-8 PD=200W (MUST BE ORDERED SEPARATELY)	28480	1854-0679
A23R1	0757-0421	4	1	RESISTOR 825 +-1% .125W TF TC=O+-100	19701	SFR25H
A23R2	0687-3321	0	1	RESISTOR 3.3K 10% .5W CC TC=0+647	01121	EB3321
A23R3	0683-7515	4	1	RESISTOR 750 5% .25W CF TC=O-400	2M627	R-25J
A23R4	0686-7525	2	1	RESISTOR 7.5K 5% .5W CC TC=0+647	01121	EB7525
A23R5	0683-2225	3	1	RESISTOR 2.2K 5% .25W CF TC=O-400	2M627	R-25J
A23R6	0698-0084	9	1	RESISTOR 2.15K 1% .125W TF TC=O+-100	19701	SFR25H
A23R7	0698-7229	8	1	RESISTOR 511 +-1% .05W TF TC=O+-100	19701	50635
A23R8	0698-7229	8	1	RESISTOR 511 +-1% .05W TF TC=O+-100	19701	50635
A23R9	0698-7229	8	1	RESISTOR 511 +-1% .05W TF TC=O+-100	19701	50635
A23R10	0698-7229	8	1	RESISTOR 511 +-1% .05W TF TC=O+-100	19701	50635
A23R11	3698-7229	8	1	RESISTOR 511 +-1% .05W TF TC=0+-100	19701	50635
A23R12	3698-7229	8	1	RESISTOR 511 +-1% .05W TF TC=0+-100	19701	50635
A23R13	3698-7229	8	1	RESISTOR 511 +-1% .05W TF TC=O+-100	19701	50635
A23U1	1826-0423	8	1	IC REGULATOR TO-3 (MUST BE ORDERED SEPARATELY)	27014	LM317K
A23W1	35660-60070	2	1	CABLE ASSEMBLY, COAX 3 (A19 TO A26) (MUST BE ORDERED SEPARATELY)	28480	85660-60070
A23W2	35660-60068	8	1	CABLE ASSEMBLY, COAX 84 (A19 TO A6A12) (MUST BE ORDERED SEPARATELY)	28480	85660-60068
A23W3	35660-60069	9	1	CABLE ASSEMBLY, COAX 8 (A21 TO A11J1) (MUST BE ORDERED SEPARATELY)	28480	85660-60069
A23W4	35660-60124	7	1	CABLE ASSEMBLY, COAX 7 (A21 TO A11A3) (MUST BE ORDERED SEPARATELY)	28480	85660-60124
A23W5	3120-2800	6	1	16-PIN CABLE ASSEMBLY [MUST BE ORDERED SEPARATELY)	28480	8120-2800
A23W6	3120-2804	0	1	26-PIN CABLE ASSEMBLY [MUST BE ORDERED SEPARATELY)	28480	8120-2804
A23W7	3120-2802	8	1	SO-PIN CABLE ASSEMBLY	28480	8120-2802

**Indicates factory-selected value*

HP Part Number 85660-60041

A23 Motherboard

Reference Designation	HP Part Number	CD	Qty	Description	Mfr Code	Mfr Part Number
				(MUST BE ORDERED SEPARATELY)		
A23XA8	1251-2026	8	1	CONNECTOR-PC EDGE 18-CONT/ROW 2-ROWS		SCM18D/7-1HP
A23XA10A1	1251-2035	9	1	CONNECTOR-PC EDGE 15-CONT/ROW 2-ROWS	26742	220-624-03
A23XA10A2	1251-2026	8	1	CONNECTOR-PC EDGE 18-CONT/ROW 2-ROWS		SCM18D/7-1HP
A23XA10A3	1251-2035	9	1	CONNECTOR-PC EDGE 15-CONT/ROW 2-ROWS	26742	220-624-03
A23XA10A4	1251-2035	9	1	CONNECTOR-PC EDGE 15-CONT/ROW 2-ROWS	26742	220-624-03
A23XA10A5	1251-2035	9	1	CONNECTOR-PC EDGE 15-CONT/ROW 2-ROWS	26742	220-624-03
A23XA10A6	1251-2035	9	1	CONNECTOR-PC EDGE 15-CONT/ROW E-ROWS	26742	220-624-03
A23XA10A7	1251-2026	8	1	CONNECTOR-PC EDGE 18-CONT/ROW L-ROWS		SCM18D/7-1HP
A23XA10A8	1251-2026	8	1	CONNECTOR-PC EDGE 18-CONT/ROW 2-ROWS		SCM18D/7-1HP
A23XA12P1	1251-7312	5	1	CONNECTOR-PC EDGE 25-CONT/ROW 2-ROWS	00779	1-530843-6
A23XA12P2	1251-2026	8	1	CONNECTOR-PC EDGE 18-CONT/ROW 2-ROWS		SCM18D/7-1HP
A23XA12P3	1251-2035	9	1	CONNECTOR-PC EDGE 15-CONT/ROW 2-ROWS	26742	220-624-03
A23XA15P1	1251-7312	5	1	CONNECTOR-PC EDGE 25-CONT/ROW 2-ROWS	00779	1-530843-6
A23XA15P2	1251-2026	8	1	CONNECTOR-PC EDGE 18-CONT/ROW 2-ROWS		SCM18D/7-1HP
A23XA15P3	1251-2035	9	1	CONNECTOR-PC EDGE 15-CONT/ROW 2-ROWS	26742	220-624-03
A23XA16P1	1251-2026	8	1	CONNECTOR-PC EDGE 18-CONT/ROW 2-ROWS		SCM18D/7-1HP
A23XA16P2	1251-2035	9	1	CONNECTOR-PC EDGE 15-CONT/ROW 2-ROWS	26742	220-624-03
A23XA17	1251-1365	6	1	CONNECTOR-PC EDGE 22-CONT/ROW 2-ROWS	26742	220-626-03
A23XA18	1251-2026	8	1	CONNECTOR-PC EDGE 18-CONT/ROW 2-ROWS		SCM18D/7-1HP
A23XA19	1251-2026	8	1	CONNECTOR-PC EDGE 18-CONT/ROW 2-ROWS		SCM18D/7-1HP
A23XA20	1251-2035	9	1	CONNECTOR-PC EDGE 15-CONT/ROW E-ROWS	26742	220-624-03
A23XA21	1251-2035	9		CONNECTOR-PC EDGE 15-CONT/ROW 2-ROWS	26742	220-624-03

**Indicates factory-selected value*

HP Part Number 85660-60368

A23 Motherboard

Reference Designation	HP Part Number	C D	Qty	Description	Mfr Code	Mfr Part Number
A23	85660-60368	1	1	BOARD ASSEMBLY, MOTHERBOARD (SERIAL PREFIX: 3001A)	28480	85660-60368
A23C1	0180-0452	8	1	CAPACITOR-FXD .031F +75-10% 25VDC AL	28480	0180-0452
A23C2	0180-0454	0	1	CAPACITOR-FXD 4200UF +75-10% 75VDC AL (MUST BE ORDERED SEPARATELY)	28480	0180-0454
A23C3	0180-0453	9	1	CAPACITOR-FXD 8700UF +75-10% 40VDC AL (MUST BE ORDERED SEPARATELY)	28480	0180-0453
A23C4	0180-2798	9	1	CAPACITOR-FXD .03F +100-10% 20VDC AL (MUST BE ORDERED SEPARATELY)	28480	0180-2798
A23C5	0160-3879	7	1	CAPACITOR-FXD .01UF +-20% 100VDC CER	04222	SR201C103MAAH
A23C6	0160-0127	2	1	CAPACITOR-FXD 1uF 50 V	04222	SR835E105MAAH
A23C7	0170-0073	8	1	CAPACITOR-FXD 1UF 600V (400HZ OPTION ONLY)	28480	0170-0073
A23CR1	1901-0743	1	1	DIODE-PWR RECT 1N4004 400V 1A DO-41	71744	1N4004
A23CR2	1901-0050	3	1	DIODE-SWITCHING 80V 200MA 2NS DO-35	9N171	1N4150
A23DS1	1990-0517	4	1	LED-LAMP LUM-INT=3MCD IF=20MA-MAX BVR=5V	28480	5082-4655
A23J2	1251-5799	8	1	CONN-POST TYPE .100-PIN-SPCG 20-CONT	76381	3428-2303
A23J3	1252-2689	1	1	CONN-HEADER. VERTICAL, 6-PIN	28480	1252-2689
A23K1	0490-1647	2	1	RELAY 2C 24VDC-COIL 5A 115VAC	77342	R40-E0161-1
A23L1	85660-80007	7	1	INDUCTOR P/S FILTER	28480	85660-80007
A23L2	85660-80007	7	1	INDUCTOR P/S FILTER	28480	85660-80007
A23L3	85660-80007	7	1	INDUCTOR P/S FILTER	28480	85660-80007
A23L4	85660-80007	7	1	INDUCTOR P/S FILTER	28480	85660-80007
A23L5	85660-80007	7	1	INDUCTOR P/S FILTER	28480	85660-80007
A23L6	85660-80007	7	1	INDUCTOR P/S FILTER	28480	85660-80007
A23L7	85660-80007	7	1	INDUCTOR P/S FILTER	28480	85660-80007
A23L8	85660-80007	7	1	INDUCTOR P/S FILTER	28480	85660-80007
A23MP1				NOT ASSIGNED		
A23MP2	0380-0076	6	4	SPACER-RVT-ON .5-IN-LG .152-IN-ID	00866	
A23MP3	0590-1491	6	11	THREADED INSERT-STDF 4-40 .156-IN-LG	46384	KFE-440-5-ET
A23MP4	2200-0105	4	2	SCREW SM440 .312 (MUST BE ORDERED SEPARATELY)	28480	2200-0105
A23MP5	0590-0519	7	14	THREADED INSERT-NUT 4-40 .062-IN-LG STL	46384	KF2-440-ET
A23MP6	85660-00026	2	1	SHOCK-MOUNT, BOTTOM (MUST BE ORDERED SEPARATELY)	28480	85660-00026
A23MP7	1520-0205	2	2	SHOCK-MOUNT, .31HG (MUST BE ORDERED SEPARATELY)	28480	1520-0205
A23MP8	85660-20093	5	2	STANDOFF-YTD CASTING SUPPORT	28480	85660-20093
A23MP9	0890-0324	8	1	TUBING-FLEX .032-ID TFE .012-WALL	09795	II-TW.FR-1
A23MP10	0890-0324	8	1	TUBING-FLEX .032-ID TFE .012-WALL	09795	II-TW,FR-1
A23MP11	0460-0778	5	1	TAPE PC, 6.85IN (MUST BE ORDERED SEPARATELY)	28480	0460-0778
A23MP12	85660-00027	3	1	HEAT SINK INSULATOR (MUST BE ORDERED SEPARATELY)	28480	85660-00027
A23MP13	85660-20061	7	1	TRANSISTOR HEAT SINK (MUST BE ORDERED SEPARATELY)	28480	85660-20061
A23MP14	0340-0923	8	10	INSULATOR, SPACER, .188L .115ID (MUST BE ORDERED SEPARATELY)	28480	0340-0923

**Indicates factory-selected value*

HP Part Number 85660-60368

A23 Motherboard

Reference Designation	HP Part Number	CD	Qty	Description	Mfr Code	Mfr Part Number
A23MP15	2200-0111	2	10	SCREW SM440 .500 PNPD (MUST BE ORDERED SEPARATELY)	28480	2200-0111
A23MP16	0340-1114	1	5	INSULATOR, TRANSISTOR TO-3ADH (MUST BE ORDERED SEPARATELY)	28480	0340-1114
A23MP17	2680-0129	8	8	SCREW SM1032 .312 PNPD (MUST BE ORDERED SEPARATELY)	28480	2680-0129
A23P1	1251-0600	0	1	CONNECTOR-SGL CDNT PIN 1.14-MM-BSC-SZ SQ	27264	16-06-0034
A23P2	1251-0600	0	1	CONNECTOR-SGL CONT PIN 1.14-MM-BSC-SZ SQ	27264	16-06-0034
A23P3	1251-0600	0	1	CONNECTOR-SGL CONT PIN 1.14-MM-BSC-SZ SQ	27264	16-06-0034
A23P4	1251-0600	0	1	CONNECTOR-SGL CONT PIN 1.14-MM-BSC-SZ SQ	27264	16-06-0034
A23P7	0360-1788	7	1	CONNECTOR-SGL CONT PIN .045-IN-BSC-SZ SQ	04574	
A23P8	0360-1788	7	1	CONNECTOR-SGL CONT PIN .045-IN-BSC-SZ SQ	04574	
A23P9	0360-1788	7	1	CONNECTOR, SINGLE MALE SQ.045 (400HZ OPTION ONLY)		
A23Q1	1854-0618	8	1	TRANSISTOR NPN SI DARL TO-3 PD=150W (MUST BE ORDERED SEPARATELY)	04713	MJ3000
A23Q2	1854-0294	0	1	TRANSISTOR NPN SI TO-3 PD=115W FT=500KHZ (MUST BE ORDERED SEPARATELY)	28480	1854-0294
A23Q3	1854-0618	8	1	TRANSISTOR NPN SI DARL TO-3 PD=150W (MUST BE ORDERED SEPARATELY)	04713	MJ3000
A23Q4	1854-0679	1	1	TRANSISTOR NPN 2N5885 SI TO-8 PD=200W (MUST BE ORDERED SEPARATELY)	28480	1854-0679
A23R1	0757-0421	4	1	RESISTOR 825 +-1% .125W TF TC=O+-100	19701	SFR25H
A23R2	1687-3321	0	1	RESISTOR 3.3K 10% .5W CC TC=0+647	01121	EB3321
A23R3	3683-7515	4	1	RESISTOR 750 5% .25W CF TC=O-400	2M627	R-25J
A23R4	3686-7525	2	1	RESISTOR 7.5K 5% .5W CC TC=0+647	01121	EB7525
A23R5	3683-2225	3	1	RESISTOR 2.2K 5% .25W CF TC=O-400	2M627	R-25J
A23R6	1698-0084	9	1	RESISTOR 2.15K 1% .125W TF TC=O+-100	19701	SFR25H
A23R7	1698-7229	8	1	RESISTOR 511 +-1% .05W TF TC=O+-100	19701	50635
A23R8	3698-7229	8	1	RESISTOR 511 +-1% .05W TF TC=O+-100	19701	50635
A23R9	0698-7229	8	1	RESISTOR 511 +-1% .05W TF TC=O+-100	19701	50635
A23R10	0698-7229	8	1	RESISTOR 511 +-1% .05W TF TC=O+-100	19701	50635
A23R11	1698-7229	8	1	RESISTOR 511 +-1% .05W TF TC=0+-100	19701	50635
A23R12	1698-7229	8	1	RESISTOR 511 +-1% .05W TF TC=O+-100	19701	50635
A23R13	3698-7229	8	1	RESISTOR 511 +-1% .05W TF TC=O+-100	19701	50635
A23U1	1826-0423	8	1	IC REGULATOR TO-3 (MUST BE ORDERED SEPARATELY)	27014	LM317K
A23W1	35660-60070	2	1	CABLE ASSEMBLY, COAX 3 (A19 TO A26) (MUST BE ORDERED SEPARATELY)	28480	85660-60070
A23W2	35660-60068	8	1	CABLE ASSEMBLY, COAX 84 (A19 TO A6A12) (MUST BE ORDERED SEPARATELY)	28480	85660-60068
A23W3	35660-60069	9	1	CABLE ASSEMBLY, COAX 8 (A21 TO A11J1) (MUST BE ORDERED SEPARATELY)	28480	85660-60069
A23W4	35660-60124	7	1	CABLE ASSEMBLY, COAX 7 (A21 TO A11A3) (MUST BE ORDERED SEPARATELY)	28480	85660-60124
A23W5	3120-2800	6	1	16-PIN CABLE ASSEMBLY (MUST BE ORDERED SEPARATELY)	28480	8120-2800

**Indicates factory-selected value*

HP Part Number 85660-60368

A23 Motherboard

Reference Designation	HP Part Number	C D	Qty	Description	Mfr Code	Mfr Part Number
A23W6	3120-2804	0	1	26-PIN CABLE ASSEMBLY (MUST BE ORDERED SEPARATELY)	28480	8120-2804
A23W7	3120-2802	8	1	50-PIN CABLE ASSEMBLY (MUST BE ORDERED SEPARATELY)	28480	8120-2802
A23XA8	1251-2026	8	1	CONNECTOR-PC EDGE 18-CONT/ROW 2-ROWS		SCM18D/7-1HP
A23XA10A1	1251-2035	9	1	CONNECTOR-PC EDGE 15-CONT/ROW 2-ROWS	26742	220-624-03
A23XA10A2	1251-2026	8	1	CONNECTOR-PC EDGE 18-CONT/ROW L-ROWS		SCM18D/7-1HP
A23XA10A3	1251-2035	9	1	CONNECTOR-PC EDGE 15-CONT/ROW E-ROWS	26742	220-624-03
A23XA10A4	1251-2035	9	1	CONNECTOR-PC EDGE 15-CONT/ROW 2-ROWS	26742	220-624-03
A23XA10A5	1251-2035	9	1	CONNECTOR-PC EDGE 15-CONT/ROW L-ROWS	26742	220-624-03
A23XA10A6	1251-2035	9	1	CONNECTOR-PC EDGE 15-CONT/ROW 2-ROWS	26742	220-624-03
A23XA10A7	1251-2026	8	1	CONNECTOR-PC EDGE 18-CONT/ROW 2-ROWS		SCM18D/7-1HP
A23XA10A8	1251-2026	8	1	CONNECTOR-PC EDGE 18-CONT/ROW 2-ROWS		SCM18D/7-1HP
A23XA12P1	1251-7312	5	1	CONNECTOR-PC EDGE 25-CONT/ROW 2-ROWS	00779	1-530843-6
A23XA12P2	1251-2026	8	1	CONNECTOR-PC EDGE 18-CONT/ROW 2-ROWS		SCM18D/7-1HP
A23XA12P3	1251-2035	9	1	CONNECTOR-PC EDGE 15-CONT/ROW E-ROWS	26742	220-624-03
A23XA15P1	1251-7312	5	1	CONNECTOR-PC EDGE 25-CONT/ROW 2-ROWS	00779	1-530843-6
A23XA15P2	1251-2026	8	1	CONNECTOR-PC EDGE 18-CONT/ROW 2-ROWS		SCM18D/7-1HP
A23XA15P3	1251-2035	9	1	CONNECTOR-PC EDGE 15-CONT/ROW 2-ROWS	26742	220-624-03
A23XA16P1	1251-2026	8	1	CONNECTOR-PC EDGE 18-CONT/ROW 2-ROWS		SCM18D/7-1HP
A23XA16P2	1251-2035	9	1	CONNECTOR-PC EDGE 15-CONT/ROW 2-ROWS	26742	220-624-03
A23XA17	1251-1365	6	1	CONNECTOR-PC EDGE 22-CONT/ROW L-ROWS	26742	220-626-03
A23XA18	1251-2026	8	1	CONNECTOR-PC EDGE 18-CONT/ROW L-ROWS		SCM18D/7-1HP
A23XA19	1251-2026	8	1	CONNECTOR-PC EDGE 18-CONT/ROW 2-ROWS		SCM18D/7-1HP
A23XA20	1251-2035	9	1	CONNECTOR-PC EDGE 15-CONT/ROW 2-ROWS	26742	220-624-03
A23XA21	1251-2035	9	1	CONNECTOR-PC EDGE 15-CONT/ROW 2-ROWS	26742	220-624-03

**Indicates factory-selected value*

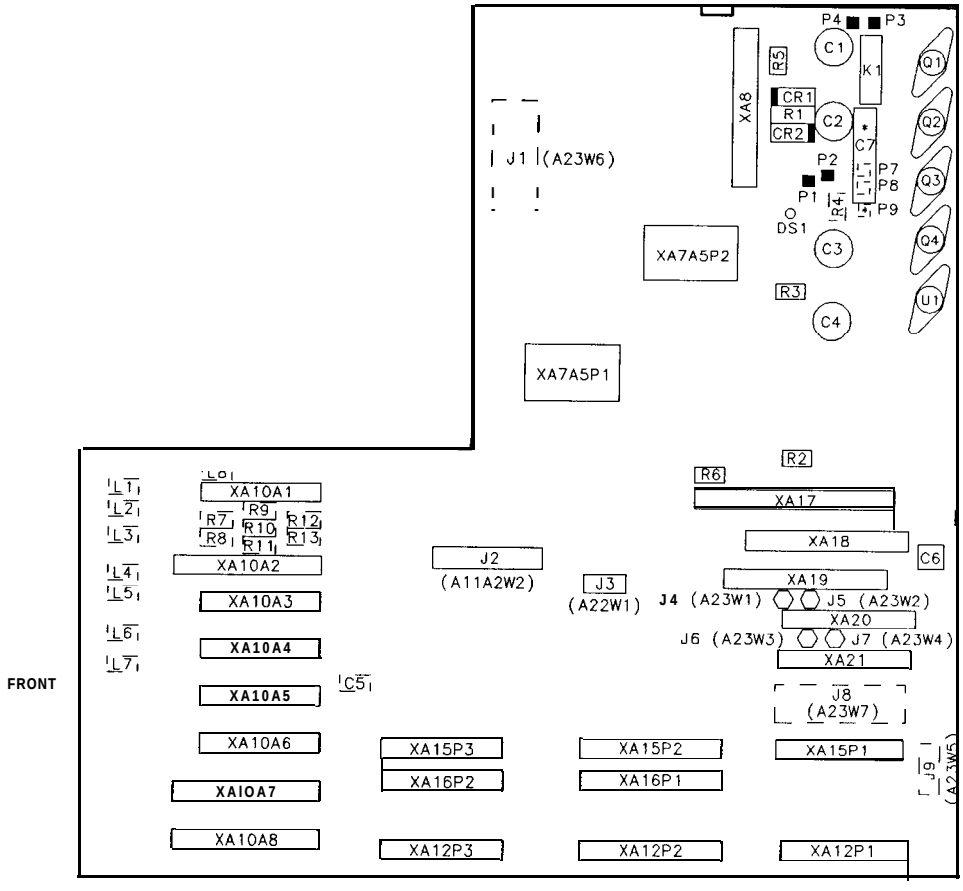

* **LOADED FOR OPTION 400** (400Hz) **ONLY**

[ ] **INDICATES COMPONENT ON REVERSE SIDE**

A23 Motherboard Component Locations, 85660-60041

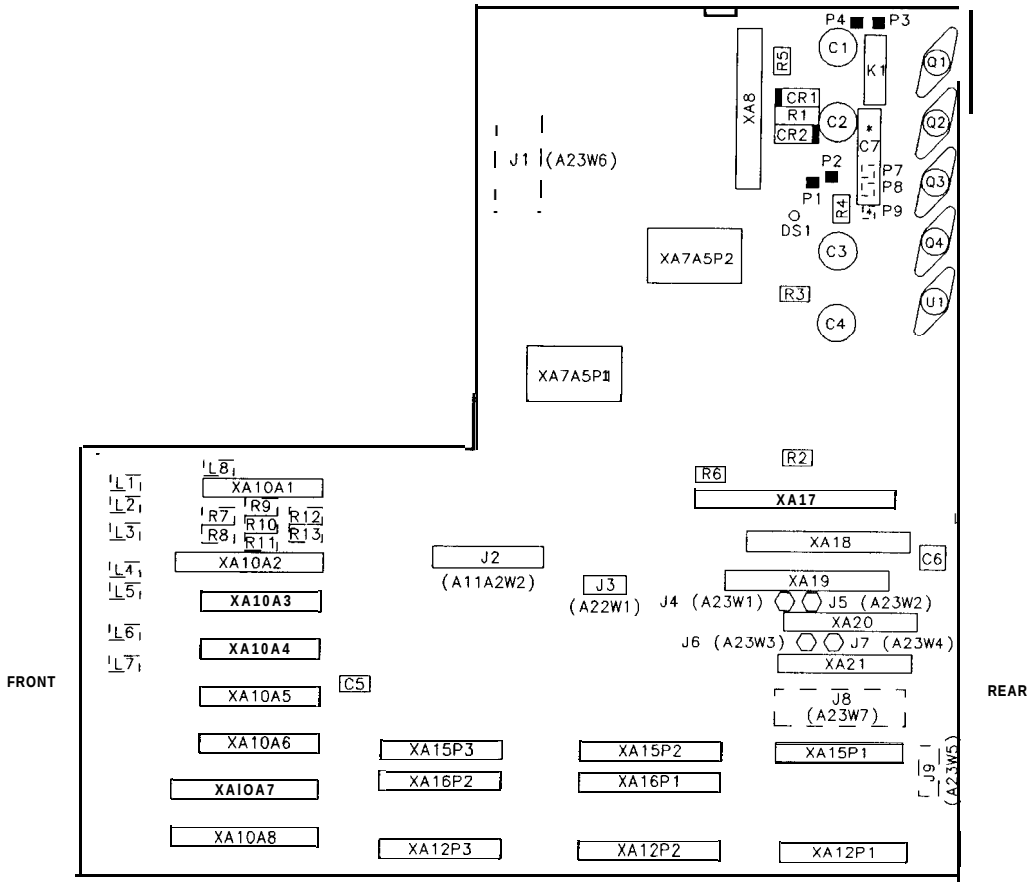

* **LOADED FOR OPTION 400** (400Hz) **ONLY**

_ **INDICATES COMPONENT ON REVERSE SIDE**

A23 Motherboard Component Locations, 85660-60368

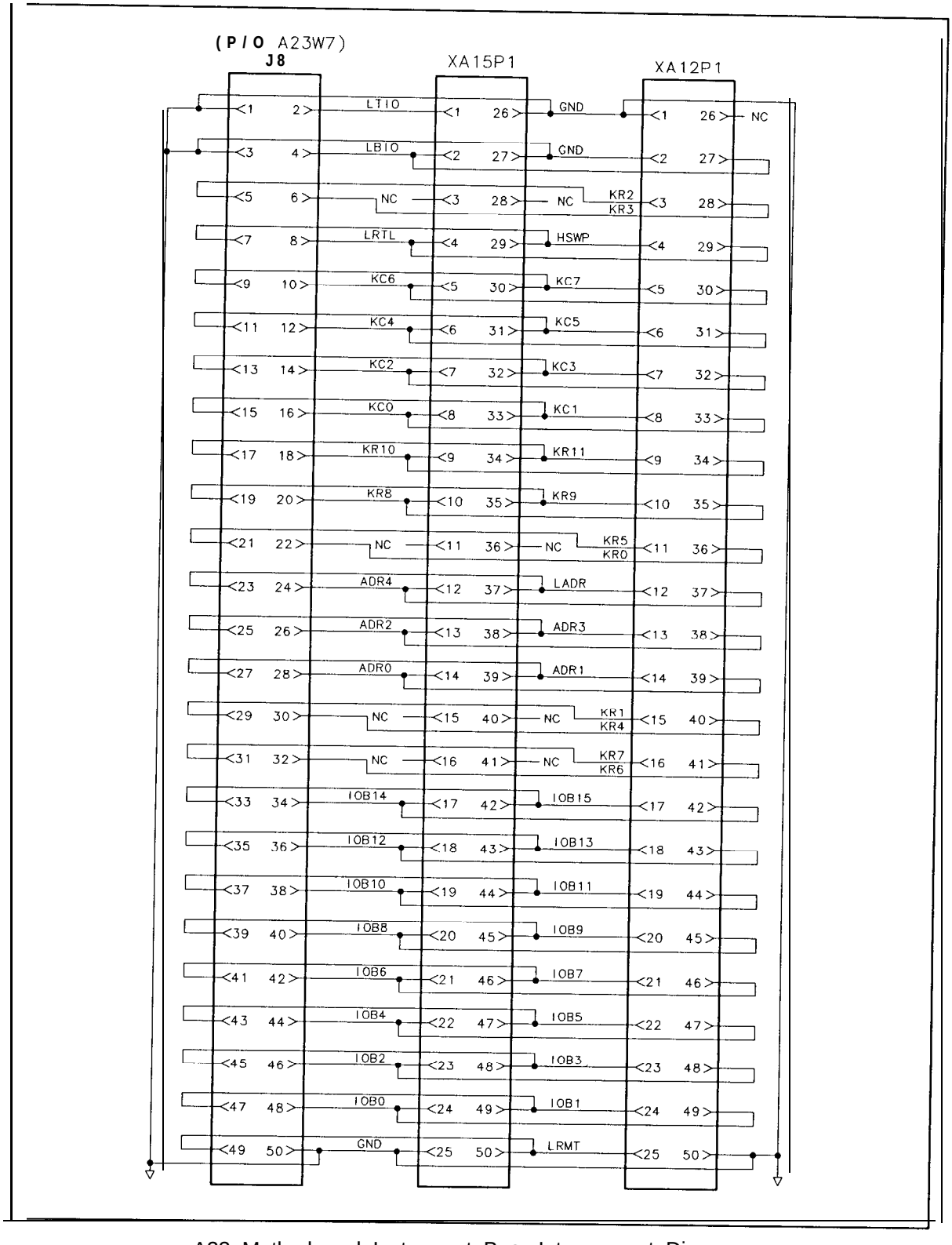

A23 Motherboard Instrument BUS, Interconnect Diagram

A23 MOTHERBOARD
85660-60041
(SERIAL PREFIXES: 2410A-2950A)

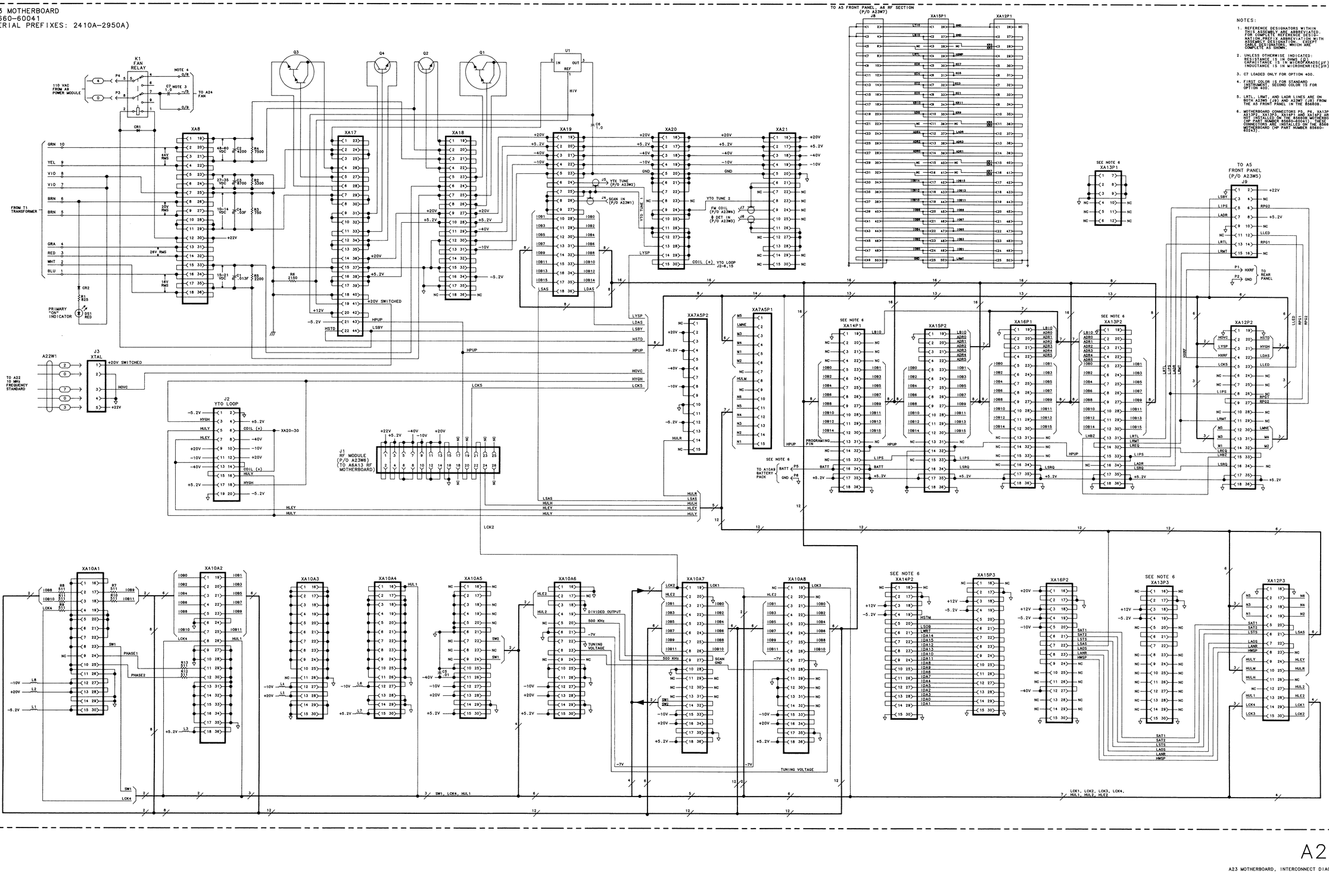

A23

A23 MOTHERBOARD, INTERCONNECT DIAGRAM

A23 MOTHERBOARD
85660-60368
(SERIAL PREFIX: 3014A)

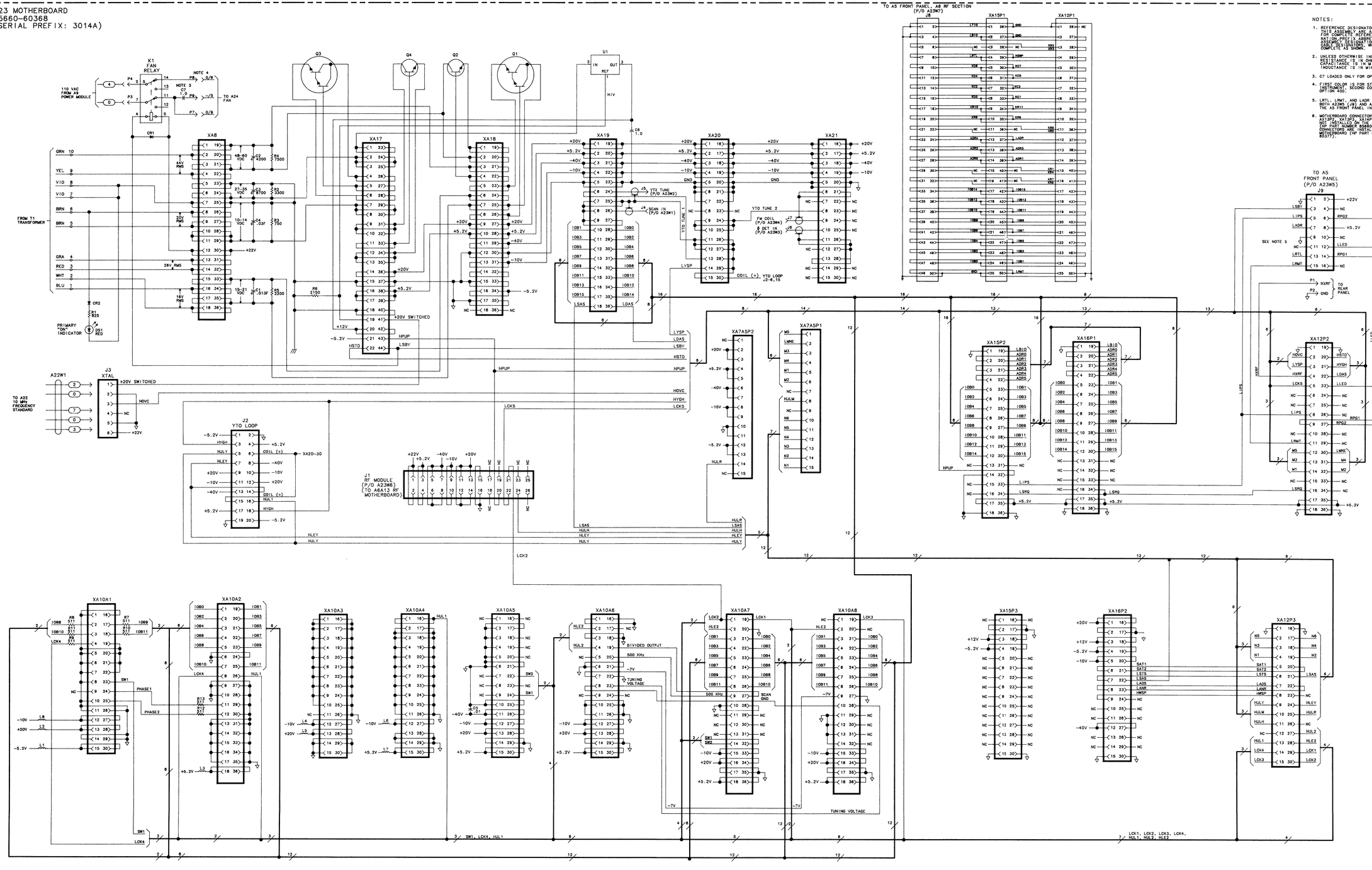

2-116

General Parts Listing

Introduction

This chapter contains information on ordering replacement parts and assemblies. The parts lists document all assembly versions up to the time that the manual is printed.

Table 1 lists reference designations, abbreviations, and value multipliers used in the parts lists.

Table 2 lists the names and addresses that correspond to the manufacturer code numbers in the parts lists.

Table 3 lists the various types of AC power cables that are available, their description, and part numbers.

Table 4 lists all major assemblies, part numbers, and descriptions of the assemblies.

Table 5 lists cables, part numbers, and descriptions of the cables .

Table 6 lists miscellaneous parts, part numbers, and descriptions of the parts.

Figures 1 through 9 illustrate the locations of instrument assemblies and hardware with the part numbers listed.

General Parts List Format

The following information is listed for each part:

1. The Hewlett-Packard part number.
2. The part number check digit (CD).
3. The total quantity (Qty) in the assembly. (This number is stated once and only at the first mention of the part.)
4. The description of the part.
5. A five-digit code indicating a typical manufacturer of the part.
6. The manufacturer part number.

Ordering Information

To order a part listed in the general parts table, quote the HP part number, include the check digit, and indicate the quantity required. Address and mail the order to the Hewlett-Packard Sales and Service Office nearest you. The check digit ensures accurate and timely processing of your order.

To order a part that is not listed in the general parts table, include the function and description of the part, and the number of parts required. Address and mail the order to the Hewlett-Packard Sales and Service Office nearest you.

Direct Mail-Order System

Within the USA, Hewlett-Packard can supply parts through a direct mail-order system. Advantages of using the system are as follows:

1. Direct ordering and shipment from the Hewlett-Packard Parts Center in Mountain View, California.
2. No maximum or minimum quantity requirement on any mail order. (There is a minimum-order quantity imposed on orders made through the Hewlett-Packard Sales and Service Offices when the orders require billing and invoicing.)
3. Prepaid transportation. (There is a handling charge added to each order.)
4. No invoices.

A check or money order must accompany direct-mail orders. Mail-order forms and specific ordering information are available from Hewlett-Packard Sales and Service Offices.

Direct Phone-Order System

A phone-order system is available within the USA for regular and hotline replacement parts service. Hewlett-Packard has provided a toll-free phone number, and accepts Mastercard or Visa for orders.

Regular Orders

The toll-free phone number is (800) 227-8164. It is available 6 am to 5 pm (Pacific time), Monday through Friday. Regular orders require a four-day delivery time.

Hotline Orders

The hotline service for ordering emergency parts is available 24 hours a day, 365 days a year. There is an additional charge on hotline orders to cover the cost of freight and special handling.

The toll-free hotline phone number is (800) 227-8164, available 6 am to 5 pm (Pacific time), Monday through Friday. The phone number for after-hours, weekends, and holidays is (415) 968-2347. Hotline orders are normally delivered the following business day.

Table 1. Reference Designations, Abbreviations, and Multipliers (1 of 4)

REFERENCE DESIGNATIONS

A	Assembly	F	Fuse	RT	Thermistor
AT	Attenuator, Isolator, Limiter, Termination	FL	Filter	S	Switch
		HY	Circulator	T	Transformer
B	Fan, Motor	J	Electrical Connector (Stationary Portion), Jack	TB	Terminal Board
BT	Battery			TC	Thermocouple
C	Capacitor			TP	Test Point
CP	Coupler	K	Relay	U	Integrated Circuit, Microcircuit
CR	Diode, Diode Thyristor, Step Recovery Diode, Varactor	L	Coil, Inductor		
		M	Meter	V	Electron Tube
		MP	Miscellaneous Mechanical Part	VR	Breakdown Diode (Zener), Voltage Regulator
DC	Directional Coupler	P	Electrical Connector (Movable Portion), Plug		
DL	Delay Line			W	Cable, Wire, Jumper
DS	Annunciator, Lamp, Light Emitting Diode (LED), Signaling Device (Visible)			X	Socket
		Q	Silicon Controlled Rectifier (SCR), Transistor, Triode Thyristor	Y	Crystal Unit (Piezoelectric, Quartz)
				Z	Tuned Cavity, Tuned Circuit
E	Miscellaneous Electrical Part	R	Resistor		

ABBREVIATIONS

	A	BSC	Basic	CNDCT	Conducting, Conductive, Conductivity, Conductor
		BTN	Button		
A	Across Flats, Acrylic, Air (Dry Method), Ampere				
			C		
				CONT	Contact, Continuous, Control, Controller
4DJ	Adjust, Adjustment	C	Capacitance, Capacitor, Center Tapped, Cermet, Cold, Compression		
4NSI	American National Standards Institute (formerly USASI-ASA)			CONV	Converter
				CPRSN	Co mpression
4SSY	Assembly	CCP	Carbon Composition Plastic	CUP-PT	Cup Point
4WG	American Wire Gage			c w	Clockwise, Continuous Wave
		CD	Cadmium, Card, Cord		
	B				
		CER	Ceramic		
BCD	Binary Coded Decimal	CHAM	Chamfer		
		CIIAR	Character, Characteristic, Charcoal		**D**
BD	Board, Bundle				
BE-CU	Beryllium Copper			D	Deep, Depletion, Depth, Diameter, Direct Current
BNC	Type of Connector	CMOS	Complementary Metal Oxide Semiconductor		
BRG	Bearing, Boring				
BRS	Brass			DA	Darlington

Table 1. Reference Designations, Abbreviations, and Multipliers (2 of 4)

ABBREVIATIONS

DAP-GL	Diallyl Phthalate Glass	FT	Current Gain Bandwidth Product (Transition Frequency), Feet, Foot	JFET	Junction Field Effect Transistor
DBL	Double				
DCDR	Decoder				**K**
DEG	Degree				
D-HOLE	D-Shaped Hole	FXD	Fixed	K	Kelvin, Key, Kilo, Potassium
DIA	Diameter				
DIP	Dual In-Line Package		G	KNRLD	Knurled
DIP-SLDR	Dip Solder			KVDC	Kilovolts
D-MODE	Depletion Mode	GEN	General, Generator		Direct Current
DO	Package Type Designation	GND	Ground		
		GP	General Purpose, Group		**L**
DP	Deep, Depth, Diametric Pitch, Dip			LED	Light Emitting Diode
DP3T	Double Pole Three Throw		**H**	LG	Length, Long
DPDT	Double Pole Double Throw	H	Henry, High	LIN	Linear, Linearity
		HDW	Hardware	LK	Link, Lock
DWL	Dowel1	IIEX	Hexadecimal, Hexagon, Hexagonal	LKG	Leakage, Locking
				LUM	Luminous
	E	HLCL	Helical		
E-R	E-Ring	HP	Hewlett-Packard Company, High Pass		M
EXT	Extended, Extension: External, Extinguish			M	Male, Maximum, Mega, Mil, Milli, Mode
			I		
	F				
F	Fahrenheit, Farad, Female, Film (Resistor), Fixed, Flange, Frequency	IC	Collector Current, Integrated Circuit	MA	Milliampere
		ID	Identification, Inside Diameter	MACH	Machined
				MAX	Maximum
		IF	Forward Current, Intermediate Frequency	MC	Molded Carbon Composition
FC	Carbon Film/ Composition, Edge of Cutoff Frequency, Face	IN	Inch	MET	Metal, Metallized
		INCL	Including	MHZ	Megahertz
		INT	Integral, Intensity, Internal	MINTR	Miniature
FDTHRU	Feedthrough			MIT	Miter
FEM	Female			MLD	Mold, Molded
FIL-HD	Fillister Head			MM	Magnetized Material, Millimeter
FL	Flash, Flat, Fluid		**J**	MOM	Momentary
FLAT-PT	Flat Point			MTG	Mounting
FR	Front	I-FET	Junction Field Effect Transistor	MTLC	Metallic
FREQ	Frequency			MW	Milliwatt

Table 1. Reference Designations, Abbreviations, and Multipliers (3 of 4)

ABBREVIATIONS

	N
N	Nano, None
N-CHAN	N-Channel
NH	Nanohenry
NM	Nanometer, Nonmetallic
NO	Normally Open, Number
NOM	Nominal
NPN	Negative Positive Negative (Transistor)
NS	Nanosecond, Non-Shorting, Nose
NUM	Numeric
NYL	Nylon (Polyamide)
	0
OA	Over-All
OD	Outside Diameter
OP AMP	Operational Amplifier
OPT	Optical, Option, Optional
	P
PA	Picoampere, Power Amplifier
PAN-HD	Pan Head
PAR	Parallel, Parity
PB	Lead (Metal), Pushbutton
PC	Printed Circuit
PCB	Printed Circuit Board
P-CHAN	P-Channel
PD	Pad, Power Dissipation
PF	Picofarad, Power Factor
PKG	Package
PLSTC	Plastic
PNL	Panel
PNP	Positive Negative Positive (Transistor
POLYC	Polycarbonate
POLYE	Polyester
POT	Potentiometer
POZI	Pozidriv Recess
PREC	Precision
PRP	Purple, Purpose
PSTN	Piston
PT	Part, Point, Pulse Time
PW	Pulse Width
	Q
3	Figure of Merit
	R
R	Range, Red, Resistance, Resistor Right, Ring
REF	Reference
RES	Resistance, Resistor
RF	Radio Frequency
RGD	Rigid
RND	Round
RR	Rear
RVT	Rivet, Riveted
	S
SAWR	Surface Acoustic Wave Resonator
SEG	Segment
SGL	Single
SI	Silicon, Square Inch
SL	Slide, Slow
SLT	Slot. Slotted
SMA	Subminiature, A Type (Threaded Connector)
SMB	Subminiature, B Type (Slip-on Connector)
SMC	Submi niature, C-Type (Threaded Connector)
SPCG	Spacing
SPDT	Single Pole Double Throw
SPST	Single Pole Single Throw
SQ	Square
SST	Stainless Steel
STL	Steel
SUBMIN	Subminiature
SZ	Size
	T
T	Teeth, Temperatu re, Thickness, Time, Timed, Tooth, Typical
TA	Ambient Temperature, Tantalum
TC	Temperature Coeffi cient
THD	Thread, Threaded
THK	Thick
TO	Package Type Designation
TPG	Tapping
TRMR	Trimmer
TRN	Turn, Turns
TRSN	Torsion

Table 1. Reference Designations, Abbreviations, and Multipliers (4 of 4)

ABBREVIATIONS					
	U	VAR	Variable		Y
		VDC	Volts-Direct Current		
UCD	Microcandela			YIG	Yttrium-Iron-Garnet
UF	Microfarad				
UH	Microhenry		**W**		
UL	Microliter,				
	Underwriters' Laboratories, Inc.	W	Watt, Wattage, White, Wide, Width		Z
UNHDND	Unhardened	W/SW	With Switch	ZNR	Zener
		w w	Wire Wound		
	V				
			X		
V	Variable, Violet, Volt, Voltage	X	By (Used with Dimensions), Reactance		
VAC	Vacuum, Volts—Alternating Current				

MULTI 'LIERS					
Abbreviation	**Prefix**	**Multiple**	Abbreviation	**Prefix**	Multiple
T	tera	10^{12}	m	milli	10^{-3}
G	giga	10^{9}	μ	micro	10^{-6}
M	mega	10^{6}	n	nano	10-s
k	kilo	10^{3}	p	pico	10^{-12}
da	deka	10^{2}	f	femto	10^{-15}
d	deci	10^{-1}	a	atto	10^{-18}
c	centi	10^{-2}			

Table 2. Manufacturers Code List

Mfr Code	Manufacturer Name	Address	Country	ZIP Code
00039	NEC ELECTRONICS INC	MTN VIEW, CA	US	9404
00046	UNITRODE CORP	LEXINGTON, MA	US	0217
00075	ARIZONA COIL INC	NOGALES, AZ	US	8562
00273	STILLWATER MFG CO	EAST FREEDOM, MA	US	0271
00278	MCCOY ELECTRONICS CO	HOLLY SPRINGS, PA	US	1706
00350	EXAR INTEGRATED SYSTEMS INC	SUNNYVALE, CA	US	9408
00466	NORELCO NORTH AMER PHILIPS LTG CORP	LOS ANGELES, CA	US	9002
00493	UNITED CHEMI-CON INC	COMPTON, CA	US	9022
00746	ROHM CORP	IRVINE, CA	US	9271
00779	NICHICON (AMERICA) CORP	SCHAUMBERG, IL	US	6019
00830	KYOCERA INTERNATIONAL INC	SAN DIEGO, CA	US	
00901	UNION CARBIDE CORP	DANBURY, CT	US	0681
01064	SCHAAL BROS INC	BERTHOUD, CO	US	8051
01074	HOLSWORTHY ELECTRONICS LTD	HOLSWORTHY	EG	
01128	RES-NET CORP	WHIPPANY, NJ	US	0798
01131	WESTERN THERMISTOR CORP	OCEANSIDE, CA	US	9205
01136	ELCO INDUSTRIES INC	ROCKFORD, IL	US	6112
01172	R C D COMPONENTS INC	BEDFORD, NH	US	0310
01185	MAGNET WIRE CORP	NEW YORK, NY	US	1001
01230	AEROVOX CORP	NEW BEDFORD, MA	US	0274
01250	GTE SYLVANIA ELEK COMPONENTS GROUP	WALTHAM, MA	US	0215
01339	GETTIG ENGRG & MFG CO INC	SPRING MILLS, PA	US	1687
01380	AMP INC	HARRISBURG, PA	US	1711
01409	CROVEN CRYSTALS	WHITBY	CN	L1N
01417	NEL FREQUENCY CONTROLS INC	BURLINGTON, WI	US	5310
01452	SANGAMO WESTON INC	NORCROSS, GA	US	3007
01461	GOE ENGINEERING CO INC	ONTARIO, CA	US	9176
01468	STETTNER & CO	LAUF	GM	D-85
01478	BOYD CORP	PLEASANTON, CA	US	9456
01542	HP DIV 01 SAN JOSE COMPONENTS	SAN JOSE, CA	US	9513
01590	PLESSEY SEMICONDUCTORS	SANTA ANA, CA	US	9270
01607	ALLEN-BRADLEY CO INC	EL PASO, TX	US	7993
01688	MURATA CORPORATION OF AMERICA	MARIETTA, GA	US	3006
01691	TRW INC SEMICONDUCTOR DIV	LAWNDALE, CA	US	9026
01698	TEXAS INSTRUMENTS INC	DALLAS, TX	US	7526
01708	JUBULATION	SANTA CRUZ, CA	US	9506
01736	ALLIED ELECTRONICS CORP	CHICAGO, IL	US	6061
01760	MATSUO ELECTRONICS OF AMERICA	HUNTINGTON BEACH, CA	US	9024
01795	SYNERTEK	SANTA CLARA, CA	US	9505
01850	AROMAT CORP	MOUNTAINSIDE, NJ	US	0709
01854	RCL ELECTRONICS INC	NORTHBROOK, IL	US	6006
01869	PULSE ENGINEERING INC	SAN DIEGO, CA	US	9211
01876	HP DIV 02 SCD IC'S	SANTA CLARA, CA	US	9505
01885	HAMILTON STANDARD CONTROLS INC	WINDWOR LOCKS, CT	US	0609
01886	COILCRAFT INC	CARY, IL	US	6001
01887	FERROXCUBE CORP	SAUGERTIES, NY	US	1247

Table 2. Manufacturers Code List (continued)

Mfr Code	Manufacturer Name	Address	Countr	ZIP Cod
01898	HI-G CO INC	HARTFORD, CT	US	0611
01916	BUNKER RAMO CORP AMPHENOL CONN DI'	BROADVILLE, IL	US	6015
01921	RCA CORP	NEW YORK, NY	US	1011
01923	NYLOGRIP PRODUCTS	WALTHAM, MA	US	0215
01924	ITW FASTEX	DES PLAINES, IL	US	6001
01939	ELPAC INC COMPONENTS DIV	IRVINE, CA	US	9266
01943	HP DIV 04 SPD CABLES 64	PALO ALTO, CA	US	9430
01953	HP DIV 04 SPD MOLDING 91	PALO ALTO, CA	US	9430
01973	GE CO SEMICONDUCTOR PROD DEPT	AUBURN, NY	US	1320
01991	TRANSITRON ELECTRONIC CORP	WAKEFIELD, MA	US	0188
01992	KDI PYROFILM CORP	WHIPPANY, NJ	US	0798
01993	MARKEL CORP	NORRISTOWN, PA	US	1940
02010	AVX CORP	GREAT NECK, NY	US	1102
02030	NATIONAL WIRE & CABLE CO INC	LOS ANGELES, CA	US	90031
02037	MOTOROLA INC	ROSELLE, IL	US	6019
02038	UNICORP	ORANGE, NJ	US	0705
02062	HP DIV 05 MSD	SAN JOSE, CA	US	9430
02086	WESTINGHOUSE ELEC CORP SEMICON DEPT	YOUNGWOOD, PA	US	1569
02091	ULTRONIX INC	GRAND JUNCTION, CO	US	8150
02123	EG & G INC	WELLESLEY, MA	US	0218
02139	MEPCO/ELECTRA INC	MORRISTOWN, NJ	US	0796
02145	RAYCHEM CORP	MENLO PARK, CA	US	9402
02160	PANDUIT CORP	TINLEY PARK, IL	US	6047
02170	AMATOM ELEK HARDWARE DIV OF MITE	NEW ROCHELLE, NY	US	0651
02172	JEFFERS ELECTRONICS INC	NOGALES, AZ	US	8562
02180	PRECISION MONOLITHICS INC	SANTA CLARA, CA	US	9505
02191	CORNING COMPONENTS INC	CORNING, NY	US	1483
02194	ROBINSON NUGENT INC	NEW ALBANY, IN	US	4715
02210	MILTON ROSS CO	SOUTHHAMPTON, PA	US	1896
02215	KELVIN ELECTRIC CO	VAN NUYS, CA	US	9140
02236	SILICON TRANSISTOR CORP	CHELMSFORD, MA	US	1153
02237	FAIRCHILD SEMICONDUCTOR CORP	CUPERTINO, CA	US	9501
02273	TRW INC BURLINGTON DIV	BURLINGTON, IA	US	5260
02290	RAYTHEON CO SEMICONDUCTOR DIV HQ	MOUNTAIN VIEW, CA	US	9404
02296	HP DIV 08 COLO SPRGS	COLORADO SPGS, CO	US	8090
02344	GE CO MINIATURE LAMP PROD DEPT	CLEVELAND, OH	US	4411
02362	HP DIV 09 LID COMPONENTS	LOVELAND, CO	US	8053
02363	HP DIV C5 COLORADO IC	FT COLLINS, CO	US	8052
02366	KOA SPEER ELECTRONICS INC	BRADFORD, PA	US	1670
02367	CORNELL-DUBILIER/SANGAMO	WAYNE, NJ	US	0747
02379	TEXAS CAPACITOR CO INC	HOUSTON, TX	US	7703
02392	C & K COMPONENTS INC	NEWTON, MA	US	0215
02408	DIXON INDUSTRIES CORPORATION	BRISTOL, RI	US	0280
02414	BURNDY CORP	NORWALK, CT	US	0685
02415	DALE ELECTRONICS INC	YANKTON, SD	US	5707
02440	THOMPSON BREMER DIV VARE	CHICAGO, IL	US	6062

Table 2. Manufacturers Code List (continued)

Mfr Code	Manufacturer Name	Address	Country	ZIP Code
02465	ANILLO INDUSTRIES INC	ORANGE, CA	US	92667
02483	CTS CORP	ELKHART, IN	US	46514
02484	CTS CORP PASO ROBLES	PASO ROBLES, CA	US	93446
02499	IRC INC	BOONE, NC	US	28607
02501	TELEDYNE INDUSTRIES INC	LOS ANGELES, CA	US	90067
02556	MONTROSE PRODUCTS CO	AUBURN, MA	US	01501
02567	OMTRONICS MFG INC	OMAHA, NE	US	68105
02569	CRYSTALONICS, DIV TELEDYNE	CAMBRIDGE, MA	US	02140
02572	TELEDYNE THERMATICS	ELM CITY, NC	US	27822
02574	RLC ELECTRONICS INS	MT KISCO, NY	US	10549
02577	HAMLIN INC	LAKE MILLS, WI	US	53551
02582	CLAROSTAT MFG CO INC	DOVER, NH	US	03820
02598	UNITRODE CORP	WATERTOWN, MA	US	02172
02603	NATIONAL WIRE & STAMPING INC	ENGLEWOOD, CO	US	80110
02608	THERMALLOY INC	DALLAS, TX	US	75234
02619	SOLITRON DEVICES INC (DIODES)	TAPPAN, NY	US	10983
02634	SPRAGUE ELECTRIC SEMICON DIV	CONCORD, NH	US	03301
02664	SEMTECH CORP	NEWBURY PARK, CA	US	91320
02668	EDISON ELEK DIV MCGRAW-EDISON	MANCHESTER, NH	US	03130
02675	AMERICAN COMPONENTS INC	CONSHOHOCKEN, PA	US	19428
02682	ITT SEMICONDUCTORS DIV	TUSTIN, CA	US	92680
02685	LOBAUGH ROLLIN J	SOUTH SAN FRANC, CA	US	94080
02686	WATKINS-JOHNSON CO	PALO ALTO, CA	US	94304
02688	MICROSEMI CORP	SCOTSDALE, AZ	US	85252
02696	CORNING GLASS WORKS ELEK PROD DIV	CORNING, NY	US	14830
02706	WARD LEONARD HAGERSTOWN DIV	HAGERSTOWN, MD	US	21740
02713	GENERAL INSTRUMENT CORP (DIODE)	HICKSVILLE, NY	US	11802
02718	VALOR ELECTRONICS INC	SANTA ANA, CA	US	92705
02734	AMETEK INC RODAN DIV	ANAHEIM, CA	US	92806
02739	MINI-CIRCUITS LAB	BROOKLYN, NY	US	11235
02744	ELEC-TROL INC	SAUGUS, CA	US	91350
02761	FENWAL ELECTRONICS INC	SADDLE BROOK, NJ	US	07662
02763	TELEDYNE SEMICONDUCTOR	MOUNTAIN VIEW, CA	US	94043
02771	ANSLEY ELECTRIC	LOS ANGELES, CA	US	90032
02788	M/A-COM INC	BURLINGTON, MA	US	01803
02798	CORNING ELECTRONICS	RALEIGH, NC	US	27604
02803	CODI SEMICONDUCTOR	LINDEN, NJ	US	07410
02805	COOPER INDUSTRIES INC	HOUSTON, TX	US	77210
02813	U S CAPACITOR CORP	BURBANK, CA	US	91504
02826	DENNISON MFG CO	FRAMINGHAM, MA	US	01701
02856	MOHAWK SPRING CO INC	ARLINGTON HEIGH, IL	US	60008
02865	ALPHA INDUSTRIES INC	WOBURN, MA	US	01801
02877	ANGSTROHM PRECISION INC	VAN NUYS, CA	US	91405
02883	SILICONIX INC	SANTA CLARA, CA	US	95054
02910	SIGNETICS CORP	SUNNYVALE, CA	US	94086
02923	CHOMERICS INC	WOBURN, MA	US	01801

Table 2. Manufacturers Code List (continued)

Mfr Code	Manufacturer Name	Address	Country	ZIP Cod
02928	VISHAY INTERTECHNOLOGY INC	MALVERN, PA	US	1935
02937	VOLTRONICS CORP	HANOVER, NJ	US	0793
02946	DUPONT E I DE NEMOURS & CO	WILMINGTON, DE	US	1980
02995	MEPCO/CENTRALAB INC	RIVIERA, FL	US	3340
03038	INTL RECTIFIER CORP	LOS ANGELES, CA	US	9006
03122	EMCON DIV ITW	SAN DIEGO, CA	US	9212
03123	MICRO-OHM CORP	EL TORO, CA	US	9263
03171	SOLITRON DEVICES INC	PALM BEACH, FL	US	3340
03172	TRW MICROWAVE	SUNNYVALE, CA	US	9408
03174	ANZAC ELEK DIV ADAMS-RUSSEL CO INC	WALTHAM, MA	US	0215
03206	DUPONT CONNECTOR SYSTEMS	CAMP HILL, PA	US	1701
03232	PRODUCT COMPONENT CORP	MT VERNON, NY	US	1055
03239	WAVETEK	SAN DIEGO, CA	US	9211
03257	M-TRON INDUSTRIES INC	YANKTON, SD	US	5707
03259	STANFORD APPLIED ENGINEERING	SANTA CLARA, CA	US	9505
03263	ELECTRONIZED CHEMICALS CORP	BURLINGTON, MA	US	0180
03273	GOWANDA ELECTRONICS CORP	GOWANDA, NY	US	1407
03282	GENERAL CABLE CORP	NEW YORK, NY	US	1001
03285	ANALOG DEVICES INC	NORWOOD, MA	US	0206
03291	AVANTEK INC	SANTA CLARA, CA	US	9505
03292	CORNING GLASS WORKS	CORNING, NY	US	1483
03297	EMC TECHNOLOGY INC	CHERRY HILL, NJ	US	0803
03316	SPECIALTY CONNECTOR CO	FRANKLIN, IN	US	4613
03317	AEG-TELEFUNKEN CORP	ENGLEWOOD, NJ	US	0763
03334	NV PHILIPS ELCOMA	EINDHOVEN	NE	0287
03352	SWISS AUTOMATICS INC	COLUMBUS, NE	US	6860
03371	USM CORP NYLOK FASTENER DIV	TORRANCE, CA	US	9050
03380	GRIES/DYNACAST CO DIV COATES-CLARK	NEW ROCHELLE, NY	US	1080
03389	VARADYNE INC	SANTA MONICA, CA	US	9040
03394	METHODE ELECTRONICS INC	CHICAGO, IL	US	6065
03395	MEPCO/CENTRALAB INC	WEST PALM BEACH, FL	US	3340
03406	NATIONAL SEMICONDUCTOR CORP	SANTA CLARA, CA	US	9505
03412	CORNING GLASS WORKS (WILMINGTON)	WILMINGTON, NC	US	2840
03418	MOLEX INC	LISLE, IL	US	6053
03428	NONOTUCK MFG CO	HADLEY FALLS, MA	US	0107
03441	F-DYNE ELECTRONICS CO	BRIDGEPORT, CT	US	0660
03521	JOHANSON DIELECTRICS INC	BURBANK, CA	US	9151
03530	STACKPOLE COMPONENT CO	RALEIGH, NC	US	2762
03545	TELEDYNE PHILBRICK NEXUS	DEDHAM, MA	US	0202
03594	CARTER SEMICONDUCTORS	LOWELL, MA	US	0185
03621	M/A-COM CABLEWAVE MINI PROD	BURLINGTON, MA	US	0180
03627	SOLID STATE DEVICES INC	LA MIRADA, CA	US	9063
03647	INSTRUMENT SPECIALTIES CO INC	DEL WATER GAP, PA	US	0742
03651	MEPCO/ELECTRA CORP	SAN DIEGO, CA	US	9212
03658	ALPHA IND MICROELECTRONICS DIVISION	COLMAR, PA	US	1891
03706	WEST-CAP ARIZONA	SAN FERNANDO, CA	US	9134

Table 2. Manufacturers Code List (continued)

Mfr Code	Manufacturer Name	Address	Country	ZIP Code
03714	INTERSIL INC	CUPERTINO, CA	CA	95014
03724	BIVAR INC	SANTA ANA, CA	US	92705
03740	ERIE TECH PROD INC ERIE FREQ CONT	CARLISLE, PA	US	17013
03744	BOURNS INC	RIVERSIDE, CA	US	92507
03746	SPECTRUM CONTROL INC	ERIE, PA	US	16505
03747	COLORADO CRYSTAL CORP	LOVELAND, CO	US	80535
03762	TELE-TECH CORP	BOZEMAN, MT	US	59771
03793	SILICON GENERAL INC	SAN JOSE, CA	US	95134
03794	ADVANCED MICRO DEVICES INC	SUNNYVALE, CA	US	94086
03795	MOTOROLA INC	FRANKLIN PARK, IL	US	60131
03799	HARRIS CORP	MELBOURNE, FL	US	32901
03811	INTEL CORP	SANTA CLARA, CA	US	95054
03827	FAIR RITE PRODUCTS CORP	WALLKILL, NY	US	12589
03849	MICROSYSTEMS INTERNATIONAL LTD	OTTAWA	CN	
03910	GENERAL ELECTRIC CO	PHILADELPHIA, PA	US	19124
03923	SIEMENS CORP	ISELIN, NJ	US	08830
03938	MIDLAND-ROSS CORP	CLEVELAND, OH	US	44113
03972	OHMITE MFG CO	SKOKIE, IL	US	60076
03973	HP DIV 45 NMD	SANTA ROSA, CA	US	95401
04068	LABINAL COMPONENTS & SYSTEMS INC	ELK GROVE VILLA, IL	US	60007
04078	SGS-THOMSON MICROELECTRONICS INC	PHOENIX, AZ	US	85022
04092	MONOLITHIC MEMORIES INC	SANTA CLARA, CA	US	95054
04121	SEMICONDUCTOR CIRCUITS INC	HAVERHILL, MA	US	01830
04150	VICLAN INC	SAN DIEGO, CA	US	92138
04169	SANGAMO ELECTRIC CO	SPRINGFIELD, IL	US	62702
04181	AHAM-TOR	RANCHO, CA	US	91702
04182	SHALLCROSS INC	NORTHBROK, IL	US	60062
04200	SPRAGUE ELECTRIC CO	LEXINGTON, MA	US	02173
04204	SPS TECHNOLOGIES	NEWTOWN, PA	US	18940
04213	STIMPSON EDWIN B CO INC	BROOKLYN, NY	US	11705
04225	THOMAS & BETTS CORP	RARITAN, NJ	US	08869
04234	DELBERT BLINN CO	POMONA, CA	US	91766
04261	INSULECTRO CORP	BURLINGAME, CA	US	94010
04314	VLN CORP VICTOREEN INSTRUMENT DIV	CLEVELAND, OH	US	44103
04379	AMETEK INC	PAOLI, PA	US	19301
04393	CENTRE ENGINEERING INC	STATE COLLEGE, PA	US	16801
04418	ALLEN MFG CO	HARTFORD, CT	US	06101
04423	G.E. CERAMICS, INC.	CHATTANOOGA, TN	US	37405
04458	BLILEY ELECTRIC CO	ERIE, PA	US	16508
04464	BRAND REX CO	WILLIMANTIC, CT	US	06226
14475	CAMBRIDGE THERMIONIC CORP	CAMBRIDGE, MA	US	02138
04486	ITT CORP	NEW YORK, NY	US	10022
04492	CENTRALAB INC	MILWAUKEE, WI	US	53209
04504	GENERAL INSTRUMENT CORP	CLIFTON, NJ	US	07012
04507	TRW INC	CLEVELAND, OH	US	44124
04514	DOW CORNING CORP	MIDLAND, MI	US	48641

Table 2. Manufacturers Code List (continued)

Mfr Code	Manufacturer Name	Address	Country	ZIP Code
04522	ELECTRO MOTIVE CORP	FLORENCE, SC	US	0622(
04550	GENERAL ELECTRIC CO	FAIRFIELD, CT	US	0643(
04563	ERIE TECHNOLOGICAL PRODUCTS INC	ERIE, PA	US	1651:
04564	ESSEX INTERNATIONAL INC	FORT WAYNE, IN	US	4680-
04567	ITT HARPER DIV	CHICAGO, IL	US	6060(
04568	BECKMAN INDUSTRIAL CORP	FULLERTON, CA	US	9263:
04581	BARWOOD MFG CORP	EVERETT, MA	US	0214:
04605	FISCHER SPECIAL MFG CO	CINCINNATI, OH	US	4520(
04615	J F D ELECTRONICS CORP	BROOKLYN, NY	US	1121:
04645	SIGNALITE DIV GENERAL INST CORP	NEPTUNE, NJ	US	0775:
04648	PIEZO CRYSTAL CO	CARLSILE, PA	US	1701:
04670	EF JOHNSON CO	WASECA, MN	US	5609:
04672	TRW INC PHILADELPHIA DIV	PHILADELPHIA, PA	US	1910:
04703	LITTELFUSE INC	DES PLAINES, IL	US	6001(
04719	MARWEDEL C W	SAN FRANCISCO, CA	US	9410:
04726	3M CO	ST PAUL, MN	US	5514-
04733	BELL INDUSTRIES INC MILLER JW DIV	COMPTON, CA	US	9022-
04757	OAK SWITCH SYSTEMS INC	CRYSTAL LAKE, IL	US	6001-
04776	POTTER & BRUMFIELD INC	PRINCETON, IN	US	4767:
04805	ILLINOIS TOOL WORKS INC SHAKEPROOF	ELGIN, IL	US	6012(
04821	TILLEY MFG CO	MORGAN HILL, CA	US	9407(
04822	STACKPOLE CARBON CO	ST MARYS, PA	US	1585:
04828	TINNERMAN PRODUCTS INC	CLEVELAND, OH	US	4410:
04830	STEWART STAMPING CORP	YONKERS, NY	US	1070-
04853	VARFLEX CORP	ROME, NY	US	1344(
04880	ZIERICK MFG CO	MT KISCO, NY	US	1054:
04935	MEPCO ELECTRA CORP	MORRISTOWN, NJ	US	0796(
04939	SCHNITZER ALLOY PRODUCTS CO	ELIZABETH, NJ	US	0720(
04977	ITT CORP COMPONENTS DIV	NEW YORK, NY	US	1002:
04990	GRAYHILL INC	LA GRANGE, IL	US	6052:
05016	MONITOR PRODUCTS CO INC	OCEANSIDE, CA	US	9205-
05065	TEXAS INSTRUMENTS INC	ATTLEBORO, MA	US	0270:
05088	VARO INC	GARLAND, TX	US	7504(
05098	VICTORY ENGINEERING CORP	SPRINGFIELD, NJ	US	0708:
05108	KULKA-SMITH INC	MANASQUAN, NJ	US	0873(
05131	ELECTRONIC DEVICES INC	YONKERS, NY	US	1071(
05160	VRN INTERNATIONAL	ST PETERSBURG, FL	US	3371(
05176	AMERICAN SHIZUKI CORP	CANOGA PARK, CA	US	9130-
05232	BRADY W H CO	MILWAUKEE, WI	US	5320:
05293	PRECISION METAL PRODUCT CO	STONEHAM, MA	US	0218(
05347	UNIMICA	NEW YORK, NY	US	1001:
05350	WILMINGTON FIBRE SPECIALTY CO	NEW CASTLE, DE	US	1972(
05364	LITTON PRECISION PROD INC	VAN NUYS, CA	US	9140:
05368	FCP INC	OLATHE, KS	US	6606:
05400	REESE J RAMSEY INC	NEW YORK, NY	US	1000:
05436	BURR-BROWN CORP	TUCSON, AZ	US	8570(

Table 2. Manufacturers Code List (continued)

Mfr Code	Manufacturer Name	Address	Countr;	ZIP Code
05447	BERGQUIST CO	MINNEAPOLIS, MN	US	5542(
05453	ICO-RALLY CORP	SUNNYVALE, CA	US	9430(
05461	ITT HARPER INC	MORTON GROVE, IL	US	6005(
05466	EMHART CORP	FARMINGTON, CT	US	06032
05507	MILLER DIAL & NAMEPLATE CO	EL MONTE, CA	US	91734
05518	AUGAT INC	MANSFIELD, MA	US	02048
05524	DALE ELECTRONICS INC	COLUMBUS, NE	US	68601
05535	KEYSTONE ELECTRONICS CORP	NEW YORK, NY	US	10012
05545	NATIONAL TEL TRONICS CORP	YONKERS, NY	US	10701
05559	ALPHA WIRE CORP	ELIZABETH, NJ	US	07207
05568	JACOBSON MFG CO INC	KENILWORTH, NJ	US	07033
05589	UNIFORM TUBES	COLLEGEVILLE, PA	US	19426
05623	CAMDEN WIRE CO INC	CAMDEN, NY	US	13316
05630	WESTON COMPONENTS	ARCHBALD, PA	US	18403
05648	MAGNECRAFT ELECTRIC CO	CHICAGO, IL	US	60630
05661	ALCO ELECTRONIC PRODUCTS INC	NORTH ANDOVER, MA	US	01845
05668	VITRAMON INC	MONROE, CT	US	06468
05683	WECKESSER CO INC	CHICAGO, IL	US	60641
05704	SAN FERNANDO ELECTRIC MFG CO	SAN FERNANDO, CA	US	91341
05742	P C A ELECTRONICS INC	SEPULVEDA, CA	US	91343
05768	MALCO-A MICRODOT CO	PASADENA, CA	US	91030
05769	ITT SEALECTRO CORP	TRUMBULL, CT	US	06611
05792	INTL ELECTRONIC RESEARCH CORP	BURBANK, CA	US	91502
05809	MARSHALL IND CAPACITOR DIV	MONROVIA, CA	US	91016
05826	AMER PRCN IND INC DELEVAN DIV	AURORA, NY	US	14052
05879	AMPHENOL CORPORATION	DANBURY, CT	US	06810
05917	RIFA AB	STOCKHOLM	SW	S-163
05943	TEXAS INSTRUMENTS DEUTSCHLAND GMBH	FREISING	GM	8050
05946	VALVO GMBH	HAMBURG	GM	2000
05951	WICKMANN-WERKE A G	WITTEN-ANNEN	GM	5870
05959	MARQUARDT GMBH	RIETHEIM	GM	D-720
05967	VTM A/S	GLOSTRUP	DK	2080
05982	CELDUC CONSTR ELECTRIQUES DU CENTRE	SORBIERS	FR	42
05985	SESCOSEM	SAINT EGREVE	FR	75781
05992	EFCO COMPOSANTS	NANTERRE	FR	
05993	CORNING GLASS EUROPE SOVCOR	LE VESINET	FR	
06003	SESCOSEM (63)	PARIS	FR	75781
06032	STC/STANTEL	DEVON	EG	
06039	SEALECTRO LTD	PORTSMOUTH	EG	
06058	BOURNS TRIMPOT LTD	MIDDLESEX	EG	
06118	ROEDERSTEIN/RESISTA GMBH	LANDSHUT	GM	8300
06121	SIEMENS AG	MUNICH	GM	8000
06127	WIMA	MANNHEIM	GM	6800
06252	AB ELEKTRONIK GMBH	SALZBURG	AU	A-501
06328	SCHURTER AG	LUZERN	SW	CH-60
06330	CONDENSATEURS FRIBOURG S A	FRIBOURG	SW	

Table 2. Manufacturers Code List (continued)

Mfr Code	Manufacturer Name	Address	Country	ZIP Cod
06337	PHILLIPS GLOEILAMPENFABRIEKEN N V	EINDHOVEN	HL	
06344	FUJITSU MICROELECTRONICS INC	SANTA CLARA, CA	US	9505
06347	HITACHI AMERICA LTD	SUNNYVALE, CA	US	9408
06352	TDK CORPORATION OF AMERICA	SKOKIE, IL	US	6007
06354	TOSHIBA CORP	TOKYO	JP	
06424	E-SIL COMPONENTS LTD	SUNDERLAND	EG	SR4
06501	BARBER & COLEMAN LTD	SALE CHES	EG	
06563	SIEMENS CORP COMPONENTS GROUP	SCOTTSDALE, AZ	US	8525
06650	AEG-TELEFUNKEN	HEILBRONN	GM	7100
06665	SAMTEC	NEW ALBANY, IN	US	4715
06784	MIDWEST COMPONENTS	MUSKEGON, MI	US	4944
06857	TRAK MICROWAVE CORP	TAMPA, FL	US	3361
06860	HUBER & SUHNER AG	HERISAU	SW	
06900	JUDD WIRE	BURLINGTON, MA	US	0180
06916	SONY CORP	TOYKO	JP	141
06951	TRW RESISTIVE PRODUCTS DIV	CORPUS CHRISTI, TX	US	78411
07041	R.A.F. ELECTRONIC HARDWARE INC	STRATFORD, CT	US	06497
07050	MICRO POWER SYSTEMS	SANTA CLARA, CA	US	95050
07158	EATON CORP	CLEVELAND, OH	US	4414
07179	AAVID ENGINEERING INC	LACONIA, NH	US	0324
07221	SUPERTEX INC	SUNNYVALE, CA	US	9408
07284	PAKTRON DIV ITW	VIENNA, VA	US	2218
07338	J K L COMPONENTS CORP	LOS ANGELES, CA	US	9006
07379	SAN-O INDUSTRIAL CORP	BOHEMIA LI, NY	US	1171
07398	BEL FUSE INC	JERSEY CITY, NJ	US	0730
07477	AMERICAN OIL & SUPPLY CO	NEWARK, NJ	US	0710
07766	LA RADIOTECHNIQUE COMPELEC	VILLEVRBANNE	FR	
07798	REMTEK CORP	SUNNYVALE, CA	US	
08097	SPRAGUE-GOODMAN ELECTRONICS	NEW HYDE PARK, NY	US	1104
08113	KAHGAN ELECTRONICS CORP	HEMPSTEAD, NY	US	1155
08123	COIL-Q CORP	BRONXVILLE, NY	US	
08259	DALE ELECTRONICS INC	TEMPE, AZ	US	85252
08261	STAR MICRONICS INC	NEW YORK, NY	US	
08335	SOURIAU INC	SAUGUS, CA	US	95203
08369	FILECA	STE GENEVIEVE	FR	
08560	OXLEY DEV LTD	CUMBRIA	EG	
08666	PANEL COMPONENTS CORP	SANTA ROSA, CA	US	
08709	PANASONIC INDUSTRIAL CO	SECAUCUS, NJ	US	07094
08778	MADISON CABLE CORP	WORCHESTER, MA	US	01603
08779	MITSUBISHI ELECTRONICS AMERICA	SUNNYVALE, CA	US	94086
08781	CATALYST RESEARCH CORP	BALTIMORE, MD	US	
08810	ROCKWELL INTERNATIONAL	ANAHEIM, CA	US	
08838	AND (ALPHA NUMERIC DISPLAYS)	BURLINGAME, CA	US	
08852	METELICS CORP	SUNNYVALE, CA	US	
09043	GLOW-LITE DIV OF DUTCH BOY	PAULS VALLEY, OK	US	
09050	XENELL	WYNNEWOOD, OK	US	

Table 2. Manufacturers Code List (continued)

Mfr Code	Manufacturer Name	Address	Country	ZIP Cod
09126	ASJ PTE LTD	JURONG TOWN	SG	
09171	RHOMBUS INDUSTRIES INC	HUNTINGTON BEACH, CA	US	9264
09226	NEC ELECTRONICS INC	SANTA CLARA, CA	US	
09235	FOX ELECTRONICS	FT MEYERS, FL	US	3391
09283	TOPAZ SEMICONDUCTOR	SAN JOSE, CA	US	9513
09441	APPLIED ENGINEERING PRODUCT CO	HAMDEM, CT	US	
09448	WAMCO INC	FOUNTAIN VALLEY, CA	US	
09454	PRECISION RESISTIVE PRODS INC	MEDIAPOLIS, IA	US	5263
09507	HP DIV 53 SAD	ROHNERT PARK, CA	US	9492
09538	TUSONIX	TUCSON, AZ	US	8574
09694	ELECTRONIC ESSENTIALS	WOODSIDE, NY	US	
09849	NDK AMERICA INC	CUPERTINO, CA	US	5401
09855	KOWASANGYO CORP	TOKYO	JP	
09859	CERA-MITE CORP	GRAFTON, WI	US	5302
09862	HITACHI CABLE LTD	TOKYO	JP	
09914	UNITRODE CORP	LEXINGTON, MA	US	
09939	MURATA ERIE NORTH AMERICA INC	SMYRNA, GA	US	3008
09955	BOYD CORP	DENVER, CO	US	
10183	TADIRAN	TEL-AVIV	IS	
10200	ELECTRONIC CONCEPTS INC	EATONTOWN, NJ	US	
10290	COMMODORE SEMICONDUCTOR GROUP	NORRISTOWN, PA	US	
10302	CENTENNIAL PLASTICS	YELLVIELLE, AR	US	
10358	VOGT AG	LOSTORF	GM	
10401	NEW SYSTEMS MOLDING CORP	LOVELAND, CO	US	80537
10407	LSI LOGIC CORP	MILPITAS, CA	US	9503
10421	EPSON	TORRENCE, CA	US	
0443	HP DIV 64 NID	CORVALLIS, OR	US	
0456	PLASTEC PRODUCTS INC	FORT COLLINS, CO	US	
0457	JERMYN INDUSTRIES LTD (63)	KENT SEVENOAKS	EG	
0481	DALE ELECTRONICS INC	NORFOLK, NE	US	68701
0549	SCI MANUFACTURING INC	HUNTSVILLE, AL	US	35805
0572	XICOR, INC	MILPITAS, CA	US	
0631	GASKET SPECIALTIES	BRISBANE, CA	US	
0784	SHINNITTOKU ELECTRIC CO LTD	MINATO-KU TOKYO	JP	145
0795	STANDEX - PAUL SMITH DIVISION	CINCINNATI, OH	US	
0858	LINEAR TECHNOLOGY CORP	MILPITAS, CA	US	95035
0881	THOMSON-CSF	COURBEVOIE	FR	
0905	FIRA	LYON	FR	
1047	TEKA PRODUCTS INC	WOODSIDE, NY	US	
1111	SEEQ TECHNOLOGY INC	SAN JOSE, CA	US	
1171	SYNERGY MICROWAVE CORP	FAIRFIELD, NJ	US	
1187	VLSI TECHNOLOGY INC	SAN JOSE, CA	US	95131
1212	INDUCTOR SUPPLY, INC.	HUNTINGTON BEACH, CA	US	
1248	MICRON DIV OF R G ALLEN CO INC	NORTH HOLLYWOOD, CA	US	
1263	W GUNTHER GMBH	NURNBERG	GM	
1298	AVEL-LINDBURG	DANBURY	CT	

Table 2. Manufacturers Code List (continued)

Mfr Code	Manufacturer Name	Address	Countr	ZIP Code
11345	CYPRESS SEMICONDUCTOR CORP	SAN JOSE, CA	US	95134
11357	BRISTOL ROYAL WORKSHOP BLIND	BRISTOL	EG	
11412	ISOLANTITE MFG COMPANY INC	STIRLING, NJ	US	
11421	KYOCERA CORPORATION	KYOTO	JP	
11599	MICRO-COAX COMPONENTS, INC	COLLEGEVILLE, PA	US	19426
11677	SARONIX	PALO ALTO, CA	US	
11684	JOSLYN DEFENSE SYSTEMS INC	BURLINGTON, VT	US	05401
11686	KYUSHU DENTSU CO LTD	NAGASAKI	JP	
11699	CENTRAL SEMICONDUCTOR CORP	HAUPPAUGE, NY	US	11788
11703	POWER GENERAL	CANTON, MA	US	
11708	THOMSON SEMICONDUCTORS	VELIZY VILLACOU	FR	78140
11723	CTL COMPONENTS LTD	LONDON	EG	SW19
11781	MIDLAND-ROSS CORP	LIVINGSTON, NJ	US	07039
11844	ELECTREY S A	MONTERREY	MX	64000
11892	EVOX/RIFA INC	LINCOLNSHIRE, IL	US	60015
11920	MIYAMA DENSEN CO LTD	TOKYO	JP	
11946	BKC INTERNATIONAL ELECTRONICS	LAWRENCE, MA	US	01841
11961	ALEXCO ENGINEERING SUPPLIES	COWDENBEATH	EG	KY4 9
11981	POWEREX	YOUNGWOOD, PA	US	15697
12125	SAMSUNG SEMICONDUCTOR INC	SANTA CLARA, CA	US	95054
12127	RF MONOLITHICS INC	DALLAS, TX	US	75234
12131	PRESIDIO COMPONENTS INC	SAN DIEGO, CA	US	92121
12186	DALLAS SEMICONDUCTOR CORP	DALLAS, TX	US	75244
12213	STACKPOLE ELECTRONICS INC	RALEIGH, NC	US	27620
12261	ERIE SPECIALTY PRODUCTS INC	ERIE, PA	US	16512
12340	KEMET ELECTRONICS CORPORATION	GREENVILLE, SC	US	29606
12355	INTERCONNECTION PRODUCTS INC	SANTA ANA, CA	US	92707
12382	LATTICE SEMICONDUCTOR CORP	BEAVERTON, OR	US	97006
12395	FEI MICROWAVE, INC.	SUNNYVALE, CA	US	94086
12418	OWL WIRE AND CABLE	CANASTATA, NY	US	13032
12456	WIRE PRO INC	SALEM, NJ	US	08079
12465	INTERNATIONAL POWER DEVICES	BRIGHTON, MA	US	02135
12473	AVX-RALEIGH DIVISION	RALEIGH, NC	US	27604
12482	BRADFORD ELECTRONICS INC	BRADFORD, PA	US	16701
12513	BUNNELL PLASTICS, INC	MICKLETON, NJ	US	08056
12516	MICROTRONICS ASSOCIATES PTE LTD	SINGAPORE	SG	1334
12580	SOUTH AMERICAN DEVELOPMENT CO	HYDE PARK, NY	US	12538
12656	BEYSCHLAG GMBH	HEIDE	GM	
12703	CHAMPION TECHNOLOGIES INC	FRANKLIN PARK, IL	US	60131
12830	KETEMA	BENSALEM, PA	US	19020
12845	WARTH INTERNATIONAL LTD	EAST GRINSTEAD	EG	RH192
12896	DOWKEY MICROWAVE INC	VENTURA, CA	US	93003

PLUG TYPE *	CABLE HP PART NUMBER	PLUG DESCRIPTION	CABLE LENGTH CM (INCHES)	CABLE COLOR	FOR USE IN COUNTRY
250V 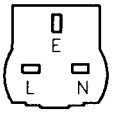	8120-1351 8120-1703	Straight**BS1363A 90°	229 (90) 229 (90)	Mint Gray Mint Gray	Great Britain, Cyprus, Nigeria Rhodesia, Singapore, So.Africa, Indi
250V 	8120-1369 8120-0696	Straight**NZSS198/ASC112 90°	201 (79) 221 (87)	Gray Gray	Australia, New Zealand
250V 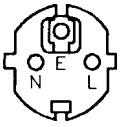	8120-1689 8120-1692	Straight**CEE7-Y11 90°	201 (79) 201 (79)	Mint Gray Mint Gray	East and West Europe, Saudi Arabia, United Arab Republic (unpolarized in many nations)
125V 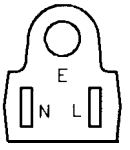	8120-1348 8120-1398 8120-1754	Straight**NEMA5-15P 90' Straight**NEMA5-15P	203 (80) 203 (80) 91 (36)	Black Black Block	United States Canada, Japan (100 V or 200 V), Mexico, Phillipines, Taiwan
	8120-1378 8120-1521 8120-1676	Straight**NEMA5-15P 90' Straight**NEMA5-15P	203 (80) 203 (80) 91 (36)	Jade Gray Jade Gray Jade Gray	
250v 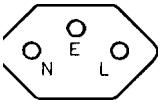	8120-2104	Straight**SEV1011 1959-24507 Type 12	201 (79)	Gray	Switzerland
220V 	8120-0698	Straight**NEMA6-15P			
250V 	8120-1860	Straight**CEE22-VI			

* E = Earth Ground; L = Line; N = Neutral

** Part number for plug is industry identifier for plug only. Number shown for cable is HP Part Number for complete cable, including plug.

Table 3. AC Power Cables Available

RF Section Assemblies

Reference Designator	HP Part Number	CD	Qty	Description	Mfr Code	Mfr Part Number
A5	85660-60258	3	1	FRONT PANEL ASSEMBLY (INCLUDES A5A1 KEYBOARD AND A5A2 ROTARY PULSE GENERATOR) (SERIAL NUMBER PREFIXES: 2516A AND ABOVE) (NOT AVAILABLE FOR FIELD REPLACEMENT)	28480	85660-6025
A5	85660-60232	3	1	FRONT PANEL ASSEMBLY (INCLUDES A5A1 KEYBOARD AND A5A2 ROTARY PULSE GENERATOR)(SERIAL NUMBER PREFIXES: 2410A-2511A) (NOT AVAILABLE FOR FIELD REPLACEMENT)	28480	85660-6023
A5Al	85660-60210	2	1	BOARD ASSEMBLY, KEYBOARD	28480	85660-6021C
A5A2	0960-0684	2	1	ROTARY PULSE GENERATOR (SERIAL NUMBER PREFIXES: 2449A AND ABOVE)	28480	0960-0684
A5A2	5060-0329	9	1	ROTARY PULSE GENERATOR (SERIAL NUMBER PREFIXES: 2410A-2430A)(NO LONGER AVAILABLE. REPLACE WITH 0960-0684 AND COMPATIBLE A12 ASSEMBLY).	28480	5060-0329
A6A1	3106-0029	2	1	RF SWITCH SPDT F SMA	28480	3106-0029
A6A1	85660-60101	0	1	RF SWITCH (OBSOLETE. ORDER HP PART NUMBER 85660-60228 FOR REPLACEMENT.)	28480	85660-60101
A6A2	85660-60336	3	1	RF ATTENUATOR/ERROR CORRECTION ROM (INCLUDES A12U8)	28480	85660-6033
A6A2	85660-60304	5	1	RF ATTENUATOR/ERROR CORRECTION ROM (INCLUDES A12U8) (OBSOLETE. ORDER HP PART NUMBER 85660-60336 FOR REPLACEMENT.)	28480	85660-6030
A6A2	85660-60121	4	1	RF ATTENUATOR/ERROR CORRECTION ROM (INCLUDES A12U8) (OBSOLETE. ORDER HP PART NUMBER 85660-60336 FOR REPLACEMENT.)	28480	85660-60121
A6A3	85660-60003	1	1	LAST CONVERTER ASSEMBLY (INCLUDES A6A3Al LAST CONVERTER BOARD)	28480	85660-60003
A6A3A1	85660-60002	0	1	BOARD ASSEMBLY, LAST CONVERTER (PART OF A6A3 LAST CONVERTER ASSEMBLY. MAY NOT BE ORDERED SEPARATELY.)	28480	85660-60002
A6A4	5086-7248	9	1	SECOND CONVERTER	28480	5086-7248
A6A5	5086-7133	1	1	AMPLIFIER/COUPLER/LOAD UNIT (ACLU)	28480	5086-7133
A6A6	5086-7247	8	1	FIRST CONVERTER	28480	5086-7247
A6A7	85660-60128	1	1	BOARD ASSEMBLY, YIG-TUNED MIXER CURRENT DRIVER	28480	85660-60128
A6A8	5086-7226	3	1	YIG-TUNED MIXER (YTX) (NEW)	28480	5086-7226
A6A8	5086-6226	1	1	YIG-TUNED MIXER (YTX) (RESTORED 5086-7226)	28480	5086-6226
A6A9	85660-60256	6	1	PHASE LOCK ASSEMBLY (INCLUDES A6A9A1 PHASE LOCK BOARD) (SERIAL NUMBER PREFIXES: 2504A AND ABOVE)	28480	85660-60256

Reference Designator	HP Part Number	CD	Qty	Description	Mfr Code	Mfr Part Number
A6A9	85660-6022(	0	1	PHASE LOCK ASSEMBLY (INCLUDES A6A9A1 (PART OF A6A9 PHASE LOCK ASSEMBLY. MAY NOT BE ORDERED SEPARATELY.)	28480	35660-6022
A6A9A1	85660-6020?	2	1	BOARD ASSEMBLY, PHASE LOCK (SERIAL NUMBER PREFIXES: 2410A-2503A) (PART OF A6A9 PHASE LOCK ASSEMBLY. MAY NOT BE ORDERED SEPARATELY.)	28480	35660-6020
A6A10	85660-6032?	7	1	BOARD ASSEMBLY, MISCELLANEOUS BIAS/RELAY DRIVER (SERIAL NUMBER PREFIXES: 2747A AND ABOVE)	28480	35660-6032
A6A10	85660-6018(	5	1	BOARD ASSEMBLY, MISCELLANEOUS BIAS/RELAY DRIVER (SERIAL NUMBER PREFIXES: 2410A-2729A)	28480	35660-6018
A6A11	85660-6023(	4	1	BOARD ASSEMBLY, SLOPE GENERATOR (SERIAL NUMBER PREFIXES: 2613A AND ABOVE)	28480	35660-6023
A6A11	85660-6012(	9	1	BOARD ASSEMBLY, SLOPE GENERATOR (SERIAL NUMBER PREFIXES: 2410A-2611A)	28480	35660-6012
A6A12	85660-6036(	9	1	BOARD ASSEMBLY, YIG-TUNED MIXER (YTX) DRIVER (SERIAL NUMBER PREFIXES: 2936A AND ABOVE)	28480	35660-6036
A6A12	85660-60235	1	1	BOARD ASSEMBLY, YIG-TUNED MIXER (YTX) DRIVER (SERIAL NUMBER PREFIXES: 2503A-2928A)	28480	35660-6023
A6A12	85660-60013	3	1	BOARD ASSEMBLY, YIG-TUNED MIXER (YTX) DRIVER (SERIAL NUMBER PREFIXES: 2410A-2449A)	28480	35660-6001
A6A13	85660-60014	4	1	BOARD ASSEMBLY, RF MODULE MOTHERBOARD	28480	35660-6001
A6A14	5086-7261	6	1	LIMITER, 0-2.5 GHZ	28480	5086-7261
A6A15	9135-0067	5	1	BANDPASS FILTER, 3.6 GHZ, SMA CONNECTORS	28480	9135-0067
A6A16	0955-0487	2	1	LOW PASS FILTER, 1.0 GHZ (SERIAL NUMBER PREFIXES: 2950A AND ABOVE)	28480	0955-0487
A6A16	5086-7299	0	1	LOW PASS FILTER, 1.5 GHZ (SERIAL NUMBER PREFIXES: 2410A-2949A)	28480	5086-7299
A6A17	0955-0117	5	1	BANDPASS FILTER, 300 MHZ	28480	0955-0117
A6A18	9135-0108	5	1	LOW PASS FILTER, 26 GHZ	28480	9135-0108
A7A1	85660-60015	5	1	BOARD ASSEMBLY, REFERENCE PHASE DETECTOR	28480	35660-6001
A7A2	85660-60135	0	1	BOARD ASSEMBLY, 100 MHZ VOLTAGE-CONTROLLED CRYSTAL OSCILLATOR (VCXO)	28480	35660-6013
A7A3	85660-60136	1	1	BOARD ASSEMBLY, M/N PHASE DETECTOR	28480	35660-6013
A7A4	85660-60267	9	1	ASSEMBLY, M/N OUTPUT (INCLUDES A7A4A1 M/N VCO ASSEMBLY AND A7A4A2 M/N OUTPUT BOARD ASSEMBLY)(SERIAL NUMBER PREFIXES: 2611A AND ABOVE)	28480	35660-6026
A7A4	85660-60113	4	1	ASSEMBLY, M/N OUTPUT (INCLUDES A7A4A1 M/N VCO ASSEMBLY AND A7A4A2 M/N OUTPUT BOARD ASSEMBLY)(SERIAL NUMBER PREFIXES: 2410A-2607A)	28480	35660-6011

RF Section Assemblies (continued)

Reference Designator	HP Part Number	CD	Qty	Description	Mfr Code	Mfr Part Number
A7A4A1	85660-60096	2	1	M/N VCO ASSEMBLY (INCLUDES A7A4A1A1 OSCILLATOR ASSEMBLY AND A7A4A1A2 BOARD ASSEMBLY)	28480	85660-60096
A7A4A2	85660-60266	8	1	BOARD ASSEMBLY, M/N OUTPUT (SERIAL NUMBER PREFIXES: 2611A AND ABOVE)	28480	85660-60266
A7A4A2	85660-60239	5	1	BOARD ASSEMBLY, M/N OUTPUT (SERIAL NUMBER PREFIXES: 2503A-2607A)	28480	85660-60239
A7A4A2	85660-60192	9	1	BOARD ASSEMBLY, M/N OUTPUT (SERIAL NUMBER PREFIXES: 2410A-2449A)		
A7A5	85660-60265	2	1	BOARD ASSEMBLY, M/N REFERENCE MOTHERBOARD (SERIAL NUMBER PREFIXES: 2611A AND ABOVE)	28480	85660-60265
A7A5	85660-60020	1	1	BOARD ASSEMBLY, M/N REFERENCE MOTHERBOARD (SERIAL NUMBER PREFIXES: 2410A-2607A)	28480	85660-60020
A8	85660-60196	3	1	BOARD ASSEMBLY, RECTIFIER	28480	85660-60196
A9	0960-0443	1	1	LINE MODULE-FILTERED	28480	0960-0443
A10A1	85660-60131	6	1	BOARD ASSEMBLY, PHASE LOCK LOOP 1 (PLL1) VOLTAGE-CONTROLLED OSCILLATOR (VCO)	28480	85660-60131
A10A2	85660-60023	5	1	BOARD ASSEMBLY, PHASE LOCK LOOP 1 (PLL1) DIVIDER	28480	85660-60023
A10A3	85660-60024	6	1	BOARD ASSEMBLY, PHASE LOCK LOOP 1 (PLL1) IF	28480	85660-60024
A10A4	85660-60025	7	1	BOARD ASSEMBLY, PHASE LOCK LOOP 3 (PLL3) UP CONVERTER	28480	85660-60025
A10A5	85660-60168	9	1	BOARD ASSEMBLY, PHASE LOCK LOOP 2 (PLL2) VOLTAGE-CONTROLLED OSCILLATOR (VCO)	28480	85660-60168
A10A6	85660-60276	0	1	BOARD ASSEMBLY, PHASE LOCK LOOP 2 (PLL2) PHASE DETECTOR (SERIAL NUMBER PREFIXES: 2618A AND ABOVE)	28480	85660-60276
A10A6	85660-60254	4	1	BOARD ASSEMBLY, PHASE LOCK LOOP 2 (PLL2) PHASE DETECTOR (SERIAL NUMBER PREFIXES: 2511A-2613A)	28480	85660-60254
A10A6	85660-60229	3	1	BOARD ASSEMBLY, PHASE LOCK LOOP 2 (PLL2) PHASE DETECTOR (SERIAL NUMBER PREFIXES: 2416A-2504A)	28480	85660-60229
A10A6	85660-60130	5	1	BOARD ASSEMBLY, PHASE LOCK LOOP 2 (PLL2) PHASE DETECTOR (SERIAL NUMBER PREFIXES: 2410A)	28480	5660-60130
A10A7	85660-60028	0	1	BOARD ASSEMBLY, PHASE LOCK LOOP 2 (PLL2) DIVIDER	28480	85660-60028
A10A8	85660-60176	9	1	BOARD ASSEMBLY, PHASE (PLL2) DISCRIMINATOR LOCK LOOP 2	28480	85660-60176
A11A1	5086-7295	6	1	COUPLER/ISOLATOR/AMPLIFIER (CIA)	28480	5086-7295

Reference Designato	HP Part Number	CI	Qty	Description	Mfr Code	Mfr Part Number
A11A2	85660-6012	6	1	BOARD ASSEMBLY, INTERCONNECT, YTO LOOP	28480	85660-60123
A11A3	85660-6021	5	1	YIG-TUNED OSCILLATOR (YTO) WITH A20U8 COMPENSATION PACKAGE	28480	85660-60213
A11A3	85660-6021	6	1	REBUILT YIG-TUNED OSCILLATOR (YTO) WITH A20U8 COMPENSATION PACKAGE	28480	85660-60214
A11A3	5086-7314	0	1	YIG-TUNED OSCILLATOR(YTO) UNCOMPENSATED (UNCOMPENSATED YTO IS NOT AVAILABLE FOR FIELD REPLACEMENT.ORDER 85660-60214 OR 85660-60213.)	28480	5086-7314
A11A4	85660-6017	8	1	BOARD ASSEMBLY, YIG-TUNED OSCILLATOR (YTO) DETECTOR	28480	85660-60175
A11A5	85660-6019	6	1	BOARD ASSEMBLY, SAMPLER	28480	85660-60199
A11A7	9135-0187	0	1	CABLE ASSEMBLY, LOW PASS FILTER, 6.2 GHZ	28480	9135-0187
A12	85660-6029	4	1	BOARD ASSEMBLY, FRONT PANEL INTERFACE (SERIAL NUMBER PREFIXES: 2618A AND ABOVE)		
A12	85660-6024	4	1	BOARD ASSEMBLY, FRONT PANEL INTERFACE (SERIAL NUMBER PREFIXES: 2449A-2613A)	28480	85660-60246
A12	85660-6021	3	1	BOARD ASSEMBLY, FRONT PANEL INTERFACE (SERIAL NUMBER PREFIXES: 2410A-2430A)	28480	85660-60211
A15	85660-6024	3	1	BOARD ASSEMBLY, CONTROLLER (SERIAL NUMBER PREFIXES: 2503A AND ABOVE)	28480	85660-60245
A15	85660-6020	9	1	BOARD ASSEMBLY, CONTROLLER (SERIAL NUMBER PREFIXES: 2410A-2449A)	28480	85660-60209
A16	85660-6024	5	1	BOARD ASSEMBLY, SCAN GENERATOR (SERIAL NUMBER PREFIXES: 2449A AND ABOVE)	28480	85660-60247
A16	85660-6019	5	1	BOARD ASSEMBLY, SCAN GENERATOR (SERIAL NUMBER PREFIXES: 2410A-2430A)	28480	85660-60198
A17	85660-6032	8	1	BOARD ASSEMBLY, POSITIVE REGULATOR (SERIAL NUMBER PREFIXES: 2747A AND ABOVE)	28480	85660-60323
A17	85660-6027	9	1	BOARD ASSEMBLY, POSITIVE REGULATOR (SERIAL NUMBER PREFIXES: 2607A-2729A)	28480	85660-60275
A17	85660-6017	7	1	BOARD ASSEMBLY, POSITIVE REGULATOR (SERIAL NUMBER PREFIXES: 2410A-2532A)	28480	85660-60174
A18	85660-6028	5	1	BOARD ASSEMBLY, NEGATIVE REGULATOR SERIAL NUMBER PREFIXES: 2627A AND ABOVE)	28480	85660-60289
A18	85660-6013	2	1	BOARD ASSEMBLY, NEGATIVE REGULATOR SERIAL NUMBER PREFIXES: 2410A-2618A)	28480	85660-60137
A19	85660-6021	4	1	BOARD ASSEMBLY, DIGITAL-TO-ANALOG CONVERTER (DAC)	28480	85660-60212
A20	85660-6020	6	1	BOARD ASSEMBLY, MAIN COIL DRIVER	28480	85660-60206
A21	85660-6004	6	1	BOARD ASSEMBLY, FM COIL DRIVER	28480	85660-60040

RF Section Assemblies (continued)

Reference Designator	HP Part Number	CI	Qty	Description	Mfr Code	Mfr Part Number
A22	5062-1916	6	1	10 MHZ FREQUENCY STANDARD ASSEMBLY (SERIAL NUMBER PREFIXES: 2728A AND ABOVE)	2848(	5062-1916
A22	85660-6004(	2	1	10 MHZ FREQUENCY STANDARD (SERIAL NUMBER PREFIXES: 2410A-2637A) (OBSOLETE. ORDER HP PART NUMBER 5062-1916 FOR REPLACEMENT.)	2848(	85660-60046
A23	85660-6036(	1	1	BOARD ASSEMBLY, MOTHERBOARD (SERIAL NUMBER PREFIXES: 3001A AND ABOVE)	2848(	85660-60368
A23	85660-60041	7	1	BOARD ASSEMBLY, MOTHERBOARD SERIAL NUMBER PREFIXES: 2410A-2950A)	28480	85660-60041
A24	85660-60358	9	1	FAN ASSEMBLY	28480	85660-60358
A24	85660-60049	5	1	FAN ASSEMBLY (OBSOLETE. ORDER HP PART NUMBER 85660-60358 FOR REPLACEMENT.)	28480	85660-60049
A24	85660-60359	0	1	FAN ASSEMBLY (400 HZ OPTION ONLY)	28480	85660-60359
A24	85660-60116	7	1	FAN ASSEMBLY (400 HZ OPTION) (OBSOLETE. ORDER HP PART NUMBER 85660-60359 FOR REPLACEMENT.)	28480	85660-60116
A25	85660-60225	9	1	REAR SUPPORT ASSEMBLY	28480	85660-60225

RF Section Cables

Reference Designator	HP Part Number	CI	Qty	Description	Mfr Code	Mfr Part Number
W1	85660-6006(	6	1	CABLE ASSEMBLY, COAX 81, A6A3 LAST CONV TO REAR PANEL J1P1	28480	85660-6006(
W2	85660-6007:	5	1	CABLE ASSEMBLY, COAX 85, A7A2 100 MHZ VCXO TO A6A9 PHASE LOCK	28480	85660-6007:
W3	85660-6006:	3	1	CABLE ASSEMBLY, COAX 82, A6A12 YTX DRIVER TO REAR PANEL J4 (SWEEP + TUNE)	28480	85660-6006:
W4	85660-6007(	8	1	CABLE ASSEMBLY, COAX 9, A7A1 REFERENCE PHASE DETECTOR TO A10A7 PLL2 DIVIDER	28480	85660-6007(
W5	85660-6007:	9	1	CABLE ASSEMBLY, COAX 86, A7A1 REFERENCE PHASE DETECTOR TO A10A2 PLL1 DIVIDER	28480	85660-6007:
W6	85660-6007:	0	1	CABLE ASSEMBLY, COAX 80, REAR PANEL J2 (FREQ REFERENCE EXT) TO A7A1 REFERENCE PHASE DETECTOR	28480	85660-6007:
W7	85660-6007:	7	1	CABLE ASSEMBLY, COAX 8, A7A2 100 MHZ VCXO TO AlOA4 PLL3 UP CONVERTER	28480	85660-6007:
W8	85660-6007:	4	1	CABLE ASSEMBLY, COAX 93, A7A4 M/N OUTPUT TO A11A5 SAMPLER	28480	85660-6007:
W9	85660-6007-	6	1	CABLE ASSEMBLY, COAX 5, AlOA1 PLL1 VCO TO A11A4 PHASE DETECTOR	28480	85660-6007-
W10				NOT ASSIGNED		
W11	85660-20277	7	1	CABLE ASSEMBLY, A11A1 DIRECTIONAL COUPLER TO AT2 (SERIAL NUMBER PREFIXES: - 2532A AND ABOVE)	28480	85660-20277
W11	85660-20067	3	1	CABLE ASSEMBLY, A11A1 DIRECTIONAL COUPLER TO A6W6 (SERIAL NUMBER - PREFIXES: 2410A-2532A)	28480	85660-20067
W12	85660-60062	2	1	CABLE ASSEMBLY, COAX 87, A22 10 MHZ FREQUENCY REFERENCE TO REAR PANEL J3 (FREQ REFERENCE INT)	28480	85660-60062
W13	85660-60065	5	1	CABLE ASSEMBLY, COAX 4, A16 SCAN GENERATOR TO REAR PANEL J1P3	28480	85660-60065
W14	85660-60064	4	1	CABLE ASSEMBLY, COAX 1, A16 SCAN GENERATOR TO REAR PANEL J1P4	28480	85660-60064
W15	85660-60117	8	1	CABLE ASSEMBLY, REAR PANEL J2 REFERENCE INT) TO REAR PANEL J3 (FREQ REFERENCE EXT)	28480	85660-60117
W16	85660-60067	7	1	CABLE ASSEMBLY, COAX 6, A7A1 REFERENCE PHASE DETECTOR TO REAR PANEL J5 (10 MHZ OUT)	284808	85660-60067
A6W1	85660-20073	7	1	CABLE ASSEMBLY, COAX A6J3 RF INPUT TO A6A2 RF ATTENUATOR (0-22 GHZ)	28480	85660-20073
A6W2	85660-20074	2	1	CABLE ASSEMBLY, COAX A6A2 RF ATTENUATOR TO A6A1 RF SWITCH (0-22 GHZ)	28480	85660-20074
A6W3	85660-20075	3	1	CABLE ASSEMBLY, COAX A6A1 RF SWITCH TO A6A8 YTX (2-22GHZ)	28480	85660-20075
A6W4	85660-20079	7	1	CABLE ASSEMBLY, COAX A6A14 LIMITER TO A6A6 1ST CONVERTER (0-2.5 GHZ)	28480	85660-20079

RF Section Cables (continued)

Reference Designato	HP Part Number	CD	Qty	Description	Mfr Code	Mfr Part Number
A6W5	85660-2007	4	1	CABLE ASSEMBLY, COAX A6A8 YTX TO/FROM A6A5 ACLU	28480	85660-2007
A6W6	85660-2007	5	1	CABLE ASSEMBLY, COAX AT2 3DB ATTENUATOR TO A6A5 ACLU (YTO LOOP OUT)	28480	85660-2007
A6W7	85660-2008	2	1	CABLE ASSEMBLY, COAX A6A5 ACLU TO A6A6 1ST CONVERTER (3.6 - 6.1 GHZ)	28480	85660-2008
A6W8	85660-2010	9	1	CABLE ASSEMBLY, COAX A6A5 ACLU TO A6J2 (FRONT PANEL) (1ST LO OUTPUT)	28480	85660-2010
A6W10	85660-2008	1	1	CABLE ASSEMBLY, COAX A6A15 3.6GHz BPF TO A6A4 SECOND CONVERTER (3621.4 MHZ)	28480	85660-2008
A6W11	85660-6005	3	1	CABLE ASSEMBLY, COAX 5 A6A4 SECOND CONVERTER TO A6A9 PHASE LOCK (3.3 GHZ)	28480	85660-6005
A6W12	85660-6009	3	1	CABLE ASSEMBLY, COAX 4 A6A9 PHASE LOCK TO A6A4 SECOND CONVERTER (TUNE VOLTAGE)	28480	85660-6009
A6W13	85660-2010	8	1	CABLE ASSEMBLY, COAX A6A5 ACLU TO A6J4 (FRONT PANEL) (IF OUTPUT)	28480	85660-2010
A6W14	85660-2011	9	1	CABLE ASSEMBLY, COAX A6A16 LPF TO A6A4 SECOND CONVERTER (321.4 MHZ)	28480	85660-2011
A6W15	85660-6005	5	1	CABLE ASSEMBLY, COAX 1 A6A4 SECOND CONVERTER TO A6A3 LAST CONVERTER (321.4 MHZ)	28480	85660-6005
A6W16	85660-6005	6	1	CABLE ASSEMBLY, COAX O A6A9 PHASE LOCK TO A6J1 (FRONT PANEL) (CAL OUTPUT)	28480	85660-6005
A6W17	85660-6005	4	1	CABLE ASSEMBLY, COAX 2 A6A9 PHASE LOCK TO A6A17 300 MHZ BPF (300 MHZ)	28480	85660-6005
A6W18	85660-6005	2	1	CABLE ASSEMBLY, COAX 2 A6A17 300 MHZ BPF TO A6A3 LAST CONVERTER (300 MHZ)	28480	85660-6005
A6W19	8120-2847	1	1	CABLE ASSEMBLY, 14 WIRE-RIBBON A6A13 RF MOTHERBOARD TO A6A7 YTX CURRENT DRIVER	28480	8120-2847
A6W20	1250-1397	2	1	ADAPTER-COAX A6A1 RF SWITCH TO A6A14 LIMITER (0-2.5 GHZ)	28480	1250-1397
A6W21	85660-6006	0	1	CABLE ASSEMBLY, A6A1/A6A4/A6A5/A6R1 HARNESS TO A6A13 RF MOTHERBOARD	28480	85660-6006
A6W22	85660-20101	6	1	CABLE ASSEMBLY, COAX A6J4 (FRONT PANEL) (IF OUTPUT) TO A6J5 (FRONT PANEL) (IF INPUT) FRONT PANEL JUMPER)	28480	85660-20101
A6W23	85660-20102	7	1	CABLE ASSEMBLY, COAX A6J5 (FRONT PANEL) (IF INPUT) TO A6A16 LPF (321.4 MHZ)	28480	85660-20102
A6A2W1	5062-0701	5	1	CABLE ASSEMBLY, 14 WIRE RIBBON A6A13 RF MOTHERBOARD TO A6A2 RF ATTENUATOR	28480	5062-0701
A6A8W1	8061-1053	0	1	CABLE ASSEMBLY, HARNESS A6A7 YTX CURRENT DRIVER TO A6A8 YTX	28480	8061-1053
A7A1W1	85660-60084	8	1	CABLE ASSEMBLY, COAX 83 A7A2 100 MHZ VCXO TO A7A1 REFERENCE PHASE DETECTOR	28480	85660-60084

RF Section Cables (continued)

Reference Designator	HP Part Number	CD	Qty	Description	Mfr Code	Mfr Part Number
A7A2W1	85660-6008	6	1	CABLE ASSEMBLY, COAX 96 A7A2 100 MHZ VCXO TO A7A3 M/N PHASE DETECTOR (400 MHZ)	2848(	85660-6008;
A7A3W1	85660-6008	7	1	CABLE ASSEMBLY, COAX 92 A7A4A2 M/N OUTPUT TO A7A3 M/N PHASE DETECTOR (355-395 MHZ)	2848(	85660-6008;
A7A3W2	85660-6008	9	1	CABLE ASSEMBLY, COAX 89 A7A1 REFERENCE PHASE DETECTOR TO A7A3 M/N PHASE DETECTOR (20 MHZ)	2848(	85660- 6008
A7A4A1A2W	85660-6011	9	1	CABLE ASSEMBLY, COAX 9 A7A4A1A2 M/N VCO TO A7A4A2 M/N OUTPUT (355-395 MHZ)	28480	85660-60118
A7A4A2W1	85660-6010	2	1	CABLE ASSEMBLY, 3 WIRE HARNESS, A7A4A2 M/N OUTPUT TO A7A4A1A2 M/N VCO	28480	85660-60103
A10A1W1	85660-6008	3	1	CABLE ASSEMBLY, COAX 1 A10A5 PLL2 VCO TO A10A1 PLL1 VCO (15-30 MHZ)	28480	85660-60089
A10A2W1	85660-6009(	6	1	CABLE ASSEMBLY, COAX 3 A10A3 PLL1 IF TO A10A2 PLL1 DIVIDER (36-139.7 MHZ)	28480	85660-60090
A10A3W1	85660-6009	8	1	CABLE ASSEMBLY, COAX 6 A10A4 PLL3 UP CONVERTER TO A10A3 PLL1 IF (160.15-166 MHZ)	28480	85660-60092
A10A3W2	85660-6009	7	1	CABLE ASSEMBLY, COAX 4 A10A1 PLL1 VCO TO A10A3 PLL3 IF (199-300 MHZ)	28480	85660-60091
A10A4W1	85660-6009	9	1	CABLE ASSEMBLY, COAX 7 A10A5 PLL2 VCO TO A10A4 PLL3 UP CONVERTER (0.15-6 MHZ)	28480	85660-60093
A10A5W1	85660-6008	2	1	CABLE ASSEMBLY, COAX 83 A10A8 PLL2 DISCRIMINATOR TO A10A5 PLL2 VCO (VCO TUNE)	28480	85660-60088
A10A7W1	85660-6008	1	1	CABLE ASSEMBLY, COAX 96 A10A5 PLL2 VCO TO A10A7 PLL2 DIVIDER (75-150 MHZ)	28480	85660-60087
A10A8W1	85660-6008	0	1	CABLE ASSEMBLY, COAX 97 A10A5 PLL2 VCO TO A10A8 PLL2 DISCRIMINATOR (0.15-0.3 MHZ)	28480	85660-60086
A10A8W2	85660-6007	3	1	CABLE ASSEMBLY, COAX 2 A16 SCAN GENERATOR TO A10A8 PLL2 DISCRIMINATOR (SCAN OUT)	28480	85660-60071
A11W1	85660-2008	6	1	CABLE ASSEMBLY, COAX A11A3 YTO TO A11A1 CIA 2.3-6.1 GHZ)	28480	85660-20086
A11W4	85660-6008	5	1	CABLE ASSEMBLY, COAX 0 A11J5 TO A11J4 (YTO IF OUT) (15-30 MHZ)	28480	85660-60081
A11A2W1	8120-2801	7	1	CABLE ASSEMBLY, 14 WIRE-RIBBON A11A2 INTERCONNECT TO A11A3 YTO	28480	8120-2801
A11A2W2	8120-2803	9	1	CABLE ASSEMBLY, 20 WIRE-RIBBON A11A2 INTERCONNECT TO/FROM A23J2	28480	8120-2803
A11A2W3	85660-6010	7	1	CABLE ASSEMBLY, BIAS 92 A11A2 INTERCONNECT TO A11A1 CIA (+5.2V PIN)	28480	85660-60108
A11A2W4	85660-6010	8	1	CABLE ASSEMBLY, BIAS 96 A11A2 INTERCONNECT TO A11A1 CIA (CIA GATE BIAS PIN)	28480	85660-60109
A12W1-4	0757-0346	2	1	RESISTOR 10 OHM 1% (JUMPERS FOR 85660A/B COMPATIBILITY)	28480	0757-0346

RF Section Cables (continued)

Reference Designator	HP Part Number	CD	Qty	Description	Mfr Code	Mfr Part Number
A16W1	1460-1489	8	1	WIREFORM (JUMPER FOR SCAN OUT)	28480	1460-1489
A22W1	5062-1922	4	1	CABLE ASSEMBLY, HARNESS A23 MOTHERBOARD TO A22Al 10 MHZ FREQUENCY STANDARD	28480	5062-1922
A23W1	85660-60070	2	1	CABLE ASSEMBLY, COAX 3 A16 SCAN GENERATOR TO A23 MOTHERBOARD FOR Al9 DAC (SCAN OUT)	28480	85660-60070
A23W2	85660-60068	8	1	CABLE ASSEMBLY, COAX 84 A23 MOTHERBOARD (FROM A19 DAC) TO A6A12 YTX DRIVER (YTX TUNE)	28480	85660-60068
A23W3	85660-60069	9	1	CABLE ASSEMBLY, COAX 8 A11J1 YTO LOOP TO A23 MOTHERBOARD FOR A21 FM COIL DRIVER (PHASE DET OUT)	28480	85660-60069
A23W4	85660-60124	7	1	CABLE ASSEMBLY, COAX 7 A21 FM COIL DRIVER TO A11A3 YTO (FM COIL INPUT)	28480	85660-60124
A23W5	8120-2800	6	1	CABLE ASSEMBLY, 16 WIRE-RIBBON MOTHERBOARD TO A5A1 KEYBOARD A23	28480	8120-2800
A23W6	8120-2804	0	1	CABLE ASSEMBLY, 26 WIRE-RIBBON A23 MOTHERBOARD TO A6A13 RF MOTHERBOARD	28480	8120-2804
A23W7	8120-2802	8	1	CABLE ASSEMBLY, 50 WIRE-RIBBON A23 MOTHERBOARD TO A5A1 KEYBOARD/A6A13 RF MOTHERBOARD	28480	8120-2802
A25W1	5061-5481	6	1	CABLE ASSEMBLY, 24 WIRE-RIBBON A15 CONTROLLER TO A25 REAR PANEL J7 (HP-IB REAR PANEL OUTPUT)	28480	5061-5481
A25W2	5062-1920	2	1	CABLE ASSEMBLY, 50 WIRE-RIBBON A15 CONTROLLER TO A25 REAR PANEL J6 (INSTRUMENT BUS REAR PANEL OUTPUT)	28480	5062-1920

RF Section Miscellaneous Parts

Reference Designator	HP Part Number	CD	Qty	Description	Mfr Code	Mfr Part Number
AT1	1810-0118			TERMINATION-COAX SMA (TERMINATES 1ST LO OUTPUT)	28480	1810-0118
AT2	0955-0114			ATTENUATOR, 3DB (SERIAL NUMBER PREFIXES: 2532A AND ABOVE)	28480	0955-0114
B1				FAN (SEE A24)		
				FILTER CAPACITOR (SEE A23C1)		
				FILTER CAPACITOR (SEE A23C2)		
				FILTER CAPACITOR (SEE A23C3)		
				FILTER CAPACITOR (SEE A23C4)		
	2110-0055			FUSE 4A 250V FAST-BLO 1.25X.25 UL IEC (FOR 100/120 VOLT OPERATION)	28480	2110-0055
	2110-0006			FUSE 2A 250V SLO-BLO 1.25X.25 UL (FOR 220/240 VOLT OPERATION)	28480	2110-0006
FL1				LINE MODULE (SEE A9)		
	1251-7498			CONNECTOR 5-PIN (IF/SWEEP)	28480	1251-7498
				PART OF W6		
				PART OF W12		
				PART OF W3		
				PART OF W16		
				PART OF A25W2		
				PART OF A25W1		
				FAN RELAY (SEE A23K1)		
	3101-0070			SWITCH-SL DPDT-NS MINTR .5A 125VAC/DC (FREQ REFERENCE INT/EXT)	28480	3101-0070
	9100-4068			TRANSFORMER, POWER, AC LINE	28480	9100-4068
	85660-60048	4	1	TRANSFORMER, POWER, AC LINE (OBSOLETE) ORDER HP PART NUMBER 9100-4068 FOR REPLACEMENT.)	28480	85660-60048
	85660-90016	9	1	INFORMATION CARD, ENGLISH (MANUAL OPERATION)	28480	85660-90016
	85660-90017	0	1	INFORMATION CARD, ENGLISH (REMOTE OPERATION)	28480	85660-90017

This page intentionally left blank.

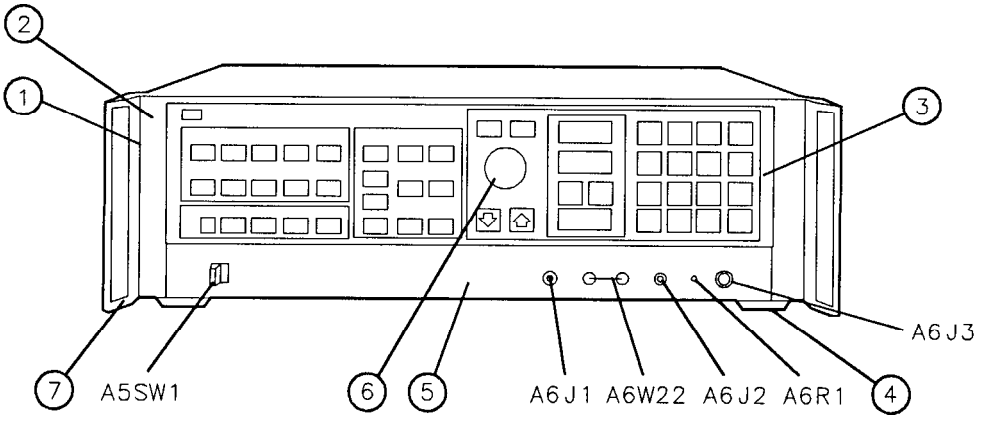

Item	HP Part Number	CD	Description	Mfr Code	Mfr Part Number
1	85660-20356	3	FRAME, FRONT, RF SECTION *	28480	85660-20356
	85660-20084	4	FRAME, FRONT, RF SECTION **	28480	85660-20084
2	5021-8699	0	BEZEL, FRONT *	28480	5021-8699
	85680-20125	8	BEZEL, FRONT **	28480	85680-20125
3	85660-00113	8	PANEL, DRESS, UPPER FRONT, RF SECTION	28480	85660-00113
4	5041-8801	8	FOOT, BOTTOM	28480	5041-8801
5	85660-00112	7	PANEL, FRONT DRESS, LOWER, RF SECTION	28480	58660-00112
6	0370-3069	2	KNOB, ROUND, RPG, DATA CONTROL	28480	0370-3069
7	5062-3989	7	FRONT HANDLES (INCLUDES TRIM), PAIR *	28480	5062-3989
	5061-0089	0	FRONT HANDLES (INCLUDES TRIM), PAIR **	28480	5061-0089

* Serial Numbers 2516A03432 and above.
** Serial Numbers 2410A00101 to 2503A03431.

Figure 1. Instrument Parts Identification, Front View

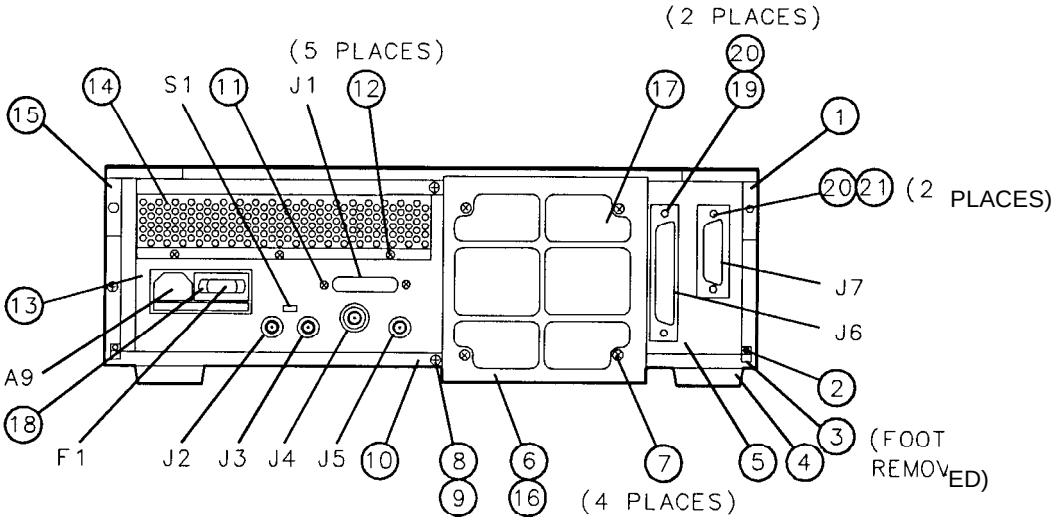
(2 PLACES)
(5 PLACES)
20
14
S1
11
J1
12
17
19
1
15
20
21
(2 PLACES)
J7
13
J6
A9
2
18
3
(FOOT
REMOVED)
F1
J2
J3
J4
J5
10
8
6
7
5
4
9
16
(4 PLACES)

Item	HP Part Number	CI	Description	Mfr Code	Mfr Part Number
1	5021-8540	0	LOCK FOOT, LOWER RIGHT	28480	5021-8540
	0515-1244	9	SCREW, METRIC 3.5 X 12 PAN HD *	28480	0515-1244
	2360-0121	2	SCREW, 6-32, .500-IN-LG PAN HD **	28480	2360-0121
2	0515-1232	5	SCREW, METRIC 3.5 X 8 PAN HD	28480	0515-1232
	2360-0119	8	SCREW, 6-32, .438-IN LG, PAN HD	28480	2360-0119
3	5041-8821	2	FOOT, REAR	28480	5041-8821
4	5041-8801	8	FOOT, BOTTOM	28480	5041-8801
5	85660-60225	9	SUPPORT, PC BOARD, REAR	28480	85660-60225
6	85660-00118	3	AIR FILTER, GRILL	28480	85660-00118
7	2190-0007	2	WASHER LOCK, .141 ID X 6	2848(	2190-0007
	2360-0197	2	SCREW, 6-32 .375-IN-LG PAN HD	2848(	2360-0197
8	0515-1245	0	SCREW, COVER MOUNTING, 6-32, .460-IN LG *	28480	0515-1245
	2360-0196	1	SCREW, COVER MOUNTING, 6-32, .460-IN LG **	28480	2360-0196
9	0510-0952	4	RETAINER RING FOR SCREW (8)	28480	0510-0952
10	5062-3747	5	COVER, 18-IN (FOR BOTTOM WITH FEET) *	28480	5062-3747
	5060-9847	4	COVER, 18-IN (FOR BOTTOM WITH FEET) **	28480	5060-9847
11	1251-2942	7	SCREW, 4-40 (INCLUDES NUT AND WASHER)	28480	1251-2942
12	2360-0115	4	SCREW, MACH, 6-32, .312-IN LG, PAN HD	28480	2360-0115
13	85660-00011	7	PANEL, REAR, RF SECTION	28480	85660-00011
14	85660-20061	7	HEAT SINK, TRANSISTOR	28480	85660-20061
15	5021-8538	6	LOCK FOOT, LOWER LEFT	28480	5021-8538
	0515-1244	9	SCREW, METRIC 3.5 X 12 PAN HD *	28480	0515-1244
	2360-0121	2	SCREW, 6-32, .500-IN-LG PAN HD **	28480	2360-0121
16	85660-00114	9	FAN, HOUSING GRILL (SERIAL NUMBERS: 2747A05729 AND ABOVE)	28480	85660-00114
	85660-60357	8	FAN HOUSING REPLACEMENT KIT (SERIAL NUMBERS: 2410A00101-2747A05728)	28480	85660-60357
17	85660-00049	9	AIR FILTER	28480	85660-00049
18	9135-0392	9	LINE MODULE WINDOW	28480	9135-0392
19	5021-3292	9	STANDOFF, BUS CABLE	28480	5021-3292
20	5001-8748	8	LOCKING PLATE (INSIDE REAR SUPPORT)	28480	5001-8748
21	1251-7002	0	STANDOFF, HP-IB CABLE	28480	1251-7002

* Serial Numbers 2516A03432 and above.
** Serial Numbers 2410A00101 to 2503A03431.

Figure 2. RF Section Parts Identification

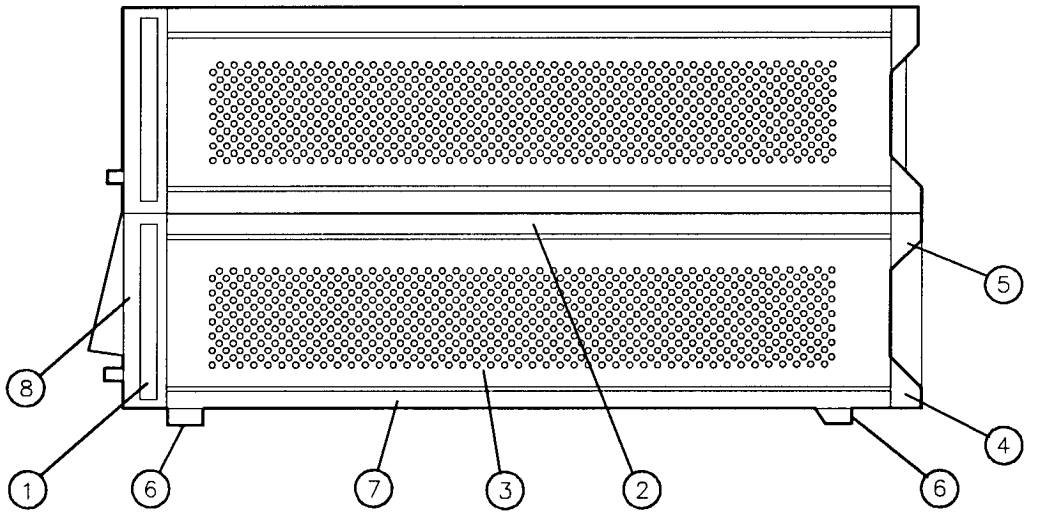

Item	HP Part Number	CD	Description	Mfr Code	Mfr Part Number
1	5062-3989	7	TRIM STRIP (PART OF FRONT HANDLES KIT)	28480	5062-3989
2	5062-3735	1	COVER, 18-IN (TOP AND BOTTOM W/O FEET) *	28480	5062-3735
	5060-9835	0	COVER, 18-IN (TOP AND BOTTOM W/O FEET) **	28480	5060-9835
3	5062-3812	5	COVER, 18-IN, SIDE, PERFORATED *	28480	5062-3812
	5060-9912	4	COVER, 18-IN, SIDE, PERFORATED **	28480	5060-9912
4	5041-8821	2	FOOT, REAR	28480	5041-8821
5	5021-8538	6	LOCK FOOT, LOWER LEFT	28480	5021-8538
6	5041-8801	8	FOOT, BOTTOM	28480	5041-8801
7	5062-3747	5	COVER, 18-IN (FOR BOTTOM WITH FEET) *	28480	5062-3747
	5060-9847	4	COVER, 18-IN (FOR BOTTOM WITH FEET) **	28480	5060-9847
8	85660-20355	2	FRAME, FRONT, RF SECTION *	28480	85660-20355
	85660-20084	4	FRAME, FRONT, RF SECTION **	28480	85660-20084

* Serial Numbers 2516A03432 and above.

** Serial Numbers 2410A00101 to 2503A03431.

Figure 3. RF Section Parts Identification, Right Side View

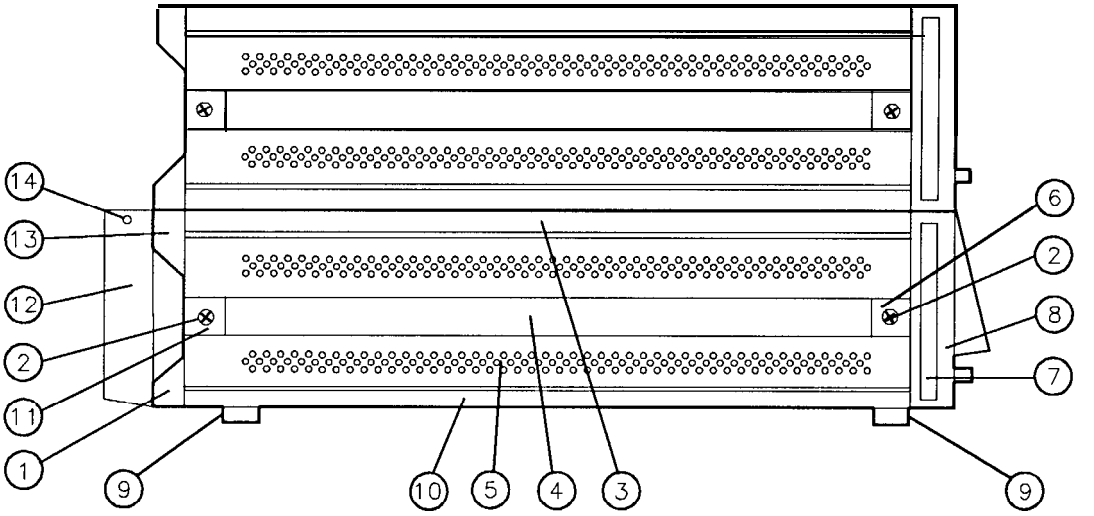

Item	HP Part Number	CD	Description	Mfr Code	Mfr Part Number
1	5041-8821	2	FOOT, REAR	28480	5041-8821
2	0515-1132	4	SCREW, METRIC, 5.0 X 10, FLAT HD *	28480	0515-1132
	2680-0172	1	SCREW, 10-32, .375 IN LG, FLAT HD **	28480	2680-0172
3	5062-3735	1	COVER, 18-IN (TOP AND BOTTOM W/O FEET) *	28480	5062-3735
	5060-9835	0	COVER, 18-IN (TOP AND BOTTOM W/O FEET) **	28480	5060-9835
4	5062-3704	4	STRAP HANDLE ASSEMBLY, 18-IN	28480	5062-3704
5	5062-3837	4	COVER, 18-IN, SIDE, PERFORATED *	28480	5062-3837
	5060-9937	3	COVER, 18-IN, SIDE, PERFORATED **	28480	5060-9937
6	5041-8819	8	COVER, STRAP HANDLE, FRONT *	28480	5041-8819
	5040-7219	8	COVER, STRAP HANDLE, FRONT **	28480	5040-7219
7	5062-3989	7	TRIM STRIP, (PART OF FRONT HANDLES KIT)	28480	5062-3989
8	85660-20355	2	FRAME, FRONT, RF SECTION *	28480	85660-20355
	85660-20084	4	FRAME, FRONT, RF SECTION **	28480	85660-20084
9	5041-8801	8	FOOT, BOTTOM	28480	5041-8801
10	5062-3747	5	COVER, 18-IN (FOR BOTTOM WITH FEET) *	28480	5062-3747
	5060-9847	4	COVER, 18-IN (FOR BOTTOM WITH FEET) **	28480	5060-9847
11	5041-8820	1	COVER, STRAP HANDLE, REAR *	28480	5041-8820
	5040-7220	1	COVER, STRAP HANDLE, REAR **	28480	5040-7220
12	5002-0659	6	HOUSING, SIDE, FAN	28480	5002-0659
13	5021-8540	2	LOCK FOOT, LOWER RIGHT	28480	5021-8540
14	2200-0770	9	SCREW, MACH, 4-40, .188-IN LG, 100 DEG FH	28480	2200-0770

* Serial Numbers 2516A03432 and above.
** Serial Numbers 2410A00101 to 2503A03431.

Figure 4. RF Section Parts Identification, Left Side View

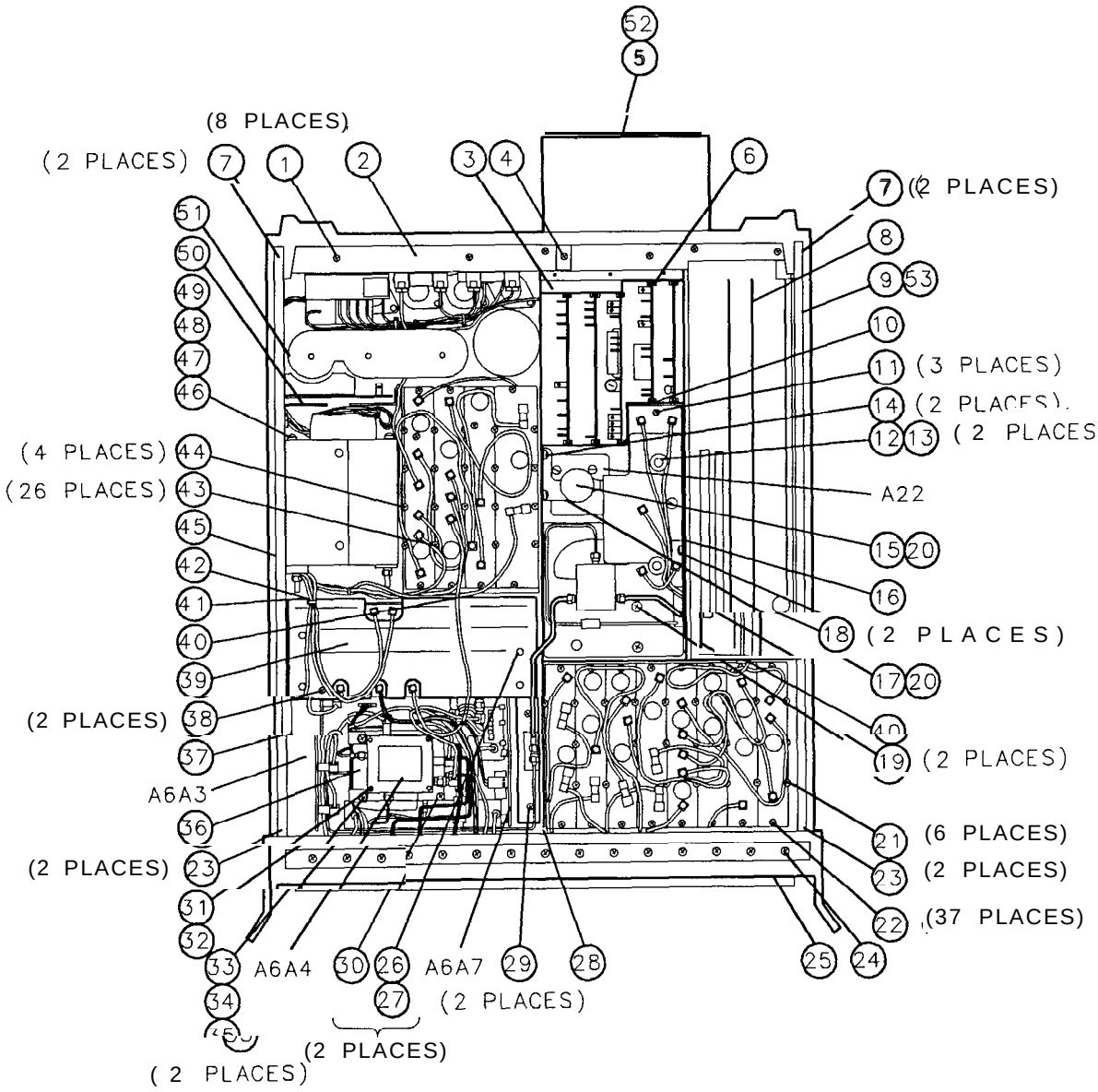

Figure 5. RF Section Parts Identification, Bottom View (1 of 3)

Item	HP Part Number	CD	Description	Mfr Code	Mfr Part Number
1	2360-0115	4	SCREW, MACH, 6-32, .312-IN LG, PAN HD	28480	2360-0115
2	85660-20233	5	FRAME, REAR, RF SECTION *	28480	85660-2023
	85660-20085	5	FRAME, REAR, RF SECTION **	28480	85660-2008
3	85660-00075	1	COVER, PLASTIC, REGULATOR	28480	85660-0007
4	86701-00028	6	SPRING, FLAT (FOR COVER (3))	28480	86701-0002
5	85660-00115	0	FAN HOUSING BOTTOM (SERIAL NUMBERS: 2747A05729 AND ABOVE)	28480	85660-0011.
	85660-60357	8	FAN HOUSING REPLACEMENT KIT (SERIAL NUMBERS: 2410A00001-2747A05728)	28480	85660-6035
6	86701-20005	1	GUIDE, PC BOARD, REGULATOR	28480	86701-2000
7	0515-1331	5	SCREW, METRIC 4 X 6 SPCL FLAT HD *	28480	0515-1331
	2510-0195	9	SCREW, 8-32, .375-IN-LG, 100 DEG, FLAT HD **	28480	2510-0195
8	85660-00074	0	COVER, CONTROLLER	28480	85660-0007
9	5021-5837	2	STRUT, CORNER, 18-IN *	28480	5021-5837
	85660-20099	1	STRUT, CORNER, 18-IN **	28480	85660-2009
10	86701-20006	2	GUIDE, PC BOARD, REGULATOR	28480	86701-2000
11	2360-0331	6	SCREW, MACH, 6-32, .25-IN LG, PAN HD	28480	2360-0331
12	2200-0103	2	SCREW, MACH, 4-40, .35-IN LG, PAN HD	28480	2200-0103
13	85660-20100	5	EXTRACTOR, PC BOARD	28480	85660-2010
14	2360-0111	0	SCREW, MACH, 6-32, .188-IN LG, PAN HD	28480	2360-0111
15	85660-00025	1	MOUNT, SUPPORT BRACKET ISOLATION (FOR A22)	28480	85660-0002
16	85660-00002	4	DIVIDER, PROCESSOR	28480	85660-0000:
17	85660-00026	2	SHOCK MOUNT SUPPORT BRACKET, BOTTOM (FOR A22)	28480	85660-0002
18	2200-0103	2	SCREW, MACH, 4-40, .25-IN LG, PAN HD	28480	2200-0103
19	2360-0333	8	SCREW, MACH, 6-32, .25-IN LG, 100 DEG FH	28480	2360-0333
20	1520-0205	2	SHOCK MOUNT (FOR A22)	28480	1520-0205
21	0515-0917	1	SCREW, METRIC 3.5 X 10 PAN HD	28480	0515-0917
22	2200-0105	4	SCREW, MACH, 4-40, .312-IN LG, 82 DEG FH	28480	2200-0105
23	0515-1331	5	SCREW, METRIC 4 X 6 SPCL FLAT HD *	28480	0515-1331
	2510-0192	6	SCREW, 8-32, .25-IN-LG, 100 DEG, FLAT HD **	28480	2510-0192
24	2360-0116	5	SCREW, MACH, 6-32, .312-IN LG, 82 DEG FH	28480	2360-0116
25	85660-20355	2	FRAME, FRONT, RF SECTION *	28480	85660-20355
	85660-20084	2	FRAME, FRONT, RF SECTION **	28480	85660-20084

* Serial Numbers 2516A03432 and above.
** Serial Numbers 2410A00101 to 2503A03431.

Figure 5. RF Section Parts Identification, Bottom View (2 of 3)

Iten	HP Part Number	CI	Description	Mfr Code	Mfr Part Number
26	2360-0117	6	SCREW, MACH, 6-32, .375-IN LG, PAN HD	28480	2360-0117
27	3050-1260	6	WASHER, FLAT, NO. 6, .149-IN (FOR SCREW (26))	28480	3050-1260
28	85660-0000	3	DIVIDER, CENTER	28480	85660-0000:
29	2360-0116	5	SCREW, MACH, 6-32, .312-IN LG, 82 DEG FH	28480	2360-0116
30	1400-0053	4	CLAMP, CABLE, NYLON, .172-IN DIA, .375-IN WIDE	28480	1400-0053
31	0520-0137	3	SCREW, MACH, 2-56, .75-IN LG, PAN HD	28480	0520-0137
32	2190-0890	1	WASHER, LOCK, HLCL, NO . 2 (FOR SCREW (31))	28480	2190-0890
33	2200-0145	2	SCREW, MACH, 4-40, .438-IN LG, PAN HD	28480	2200-0145
34	2190-0003	8	WASHER, LOCK, HLCL, NO. 4 (FOR SCREW (33))	28480	2190-0003
35	3050-0105	6	WASHER, FLAT, NO. 4 (FOR SCREW (33))	28480	3050-0105
36	35660-00021	7	COVER, MICROCIRCUIT MOUNT	28480	85660-00021
37	35660-00015	9	MAIN BRACKET, RF MODULE	28480	85660-0001:
38	2200-0105	4	SCREW, MACH, 4-48 .312-IN-LG PAN HD	28480	2200-0105
39	35660-0007:	9	COVER, PC BOARD, RF MODULE	28480	85660-00073
40	0400-0009	9	GROMMET, ROUND, .125-IN ID, .25-IN OD	18480	0400-0009
41	35660-00091	1	CHASSIS, RF MODULE *	18480	85660-00091
	35660-00007	9	CHASSIS, RF MODULE **	18480	85660-00007
12	0400-0219	3	GROMMET, ROUND, .5-IN ID, .093-IN WIDE	18480	0400-0219
13	2200-0105	4	SCREW, MACH, 4-40, .312-IN LG, PAN HD	38480	2200-0105
14	35660-60100	9	SCREW, MACH, 4-40, .312-IN LG, PAN HD (INCLUDES WASHER)	18480	85660-60100
15	1566620232	4	STRUT, CORNER, 18-IN *	28480	85660-20232
	5020-8837	6	STRUT, CORNER, 18-IN **	28480	5020-8837
46	2360-0197	2	SCREW, MACH, 6-32, .375-IN LG, PAN HD	28480	2360-0197
47	2190-0006	1	WASHER, LOCK, HLCL, NO. 6 (FOR SCREW (46))	28480	2190-0006
48	3050-0227	3	WASHER, FLAT, NO. 6 (FOR SCREW (46))	28480	3050-0227
49	2420-0002	6	NUT, HEX, 6-32 THREAD (FOR SCREW (46))	28480	2420-0002
50	35660-0001:	7	SUPPORT, PC BOARD, RECTIFIER	28480	85660-0001:
51	86701-00016	2	SUPPORT, CAPACITOR	28480	86701-00016
52	35660-00114	9	FAN, HOUSING GRILL (SERIAL NUMBERS: 2747A05729 AND ABOVE)	28480	85660-00114
	35660-60357	8	FAN HOUSING REPLACEMENT KIT (SERIAL NUMBERS: 2410A00001-2747A05728)	28480	85660-60357
53	35660-00004	6	PROCESSOR PIVOT BRACKET	18480	85660-00004

* Serial Numbers 2516A03432 and above.
** Serial Numbers 2410A00101 to 2503A03431

Figure 5. RF Section Parts Identification, Bottom View (3 of 3)

This page intentionally left blank

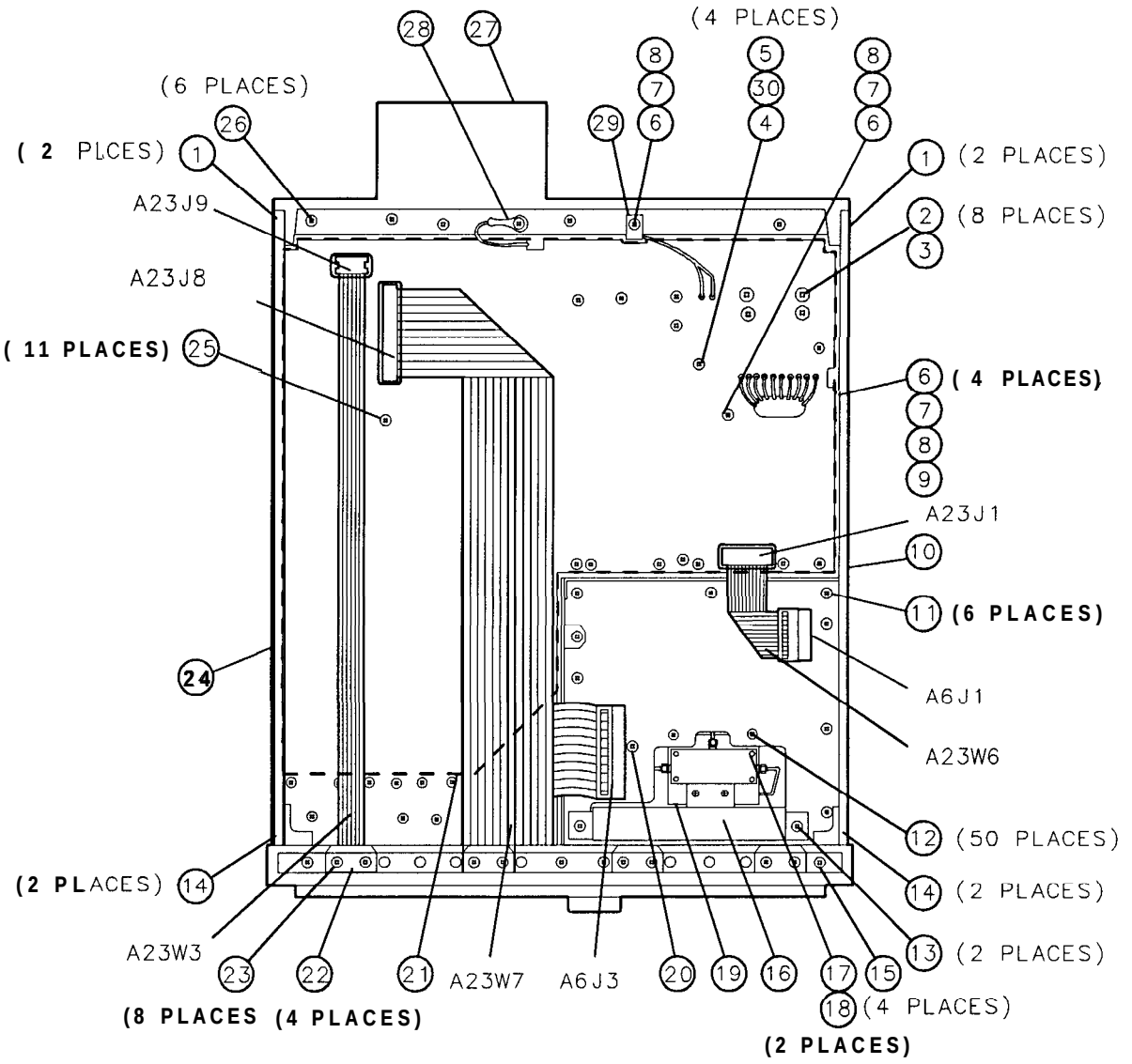

Figure 6. RF Section Parts Identification, Top View (1 of 2)

Item	HP Part Number	CD	Description	Mfr Code	Mfr Part Number
1	0515-1331	5	SCREW, METRIC 6 X FLAT CLHD *	28480	0515-1331
	2510-0195	9	SCREW, 8-32 .375-IN-LG, 100 FLAT HD **	28480	2510-0195
2	2680-0129	8	SCREW, MACH 0-21 2-IN PAN HD	28480	2680-0129
3	2190-0011	8	WASHER, LOCK, INTERNAL TOOTH (FOR SCREW (2))	28480	2190-0011
4	2200-0155	4	SCREW, MACH 440 IN L1.0 PAN HD	28480	2200-0155
5	3050-0105	6	WASHER, FLAT NO.4 (FOR SCREW (4))	28480	3050-0105
6	2360-0197	2	SCREW, MACH 6-32 .375-IN PAN HD	28480	2360-0197
7	2190-0006	1	WASHER, LOCK, HLCL, 6 NO. SCREW (6))	28480	2190-0006
8	3050-0227	3	WASHER, FLAT, NO.6 (FOR SCREW (6)	28480	3050-0227
9	2420-0002	6	NUT, HEX, 6-32 THREAD SCREW (6))	28480	2420-0002
10	85660-20231	3	STRUT, CORNER, 18-1N *	28480	85660-2023
	85660-20098	0	STRUT, CORNER, 18-1N **	28480	85660-2009
11	2360-0115	4	SCREW, MACH. 6-3.312N-LG PAN HD	28480	2360-0115
12	2200-0105	4	SCREW, MACH, 4-40, .312-IN LG, PAN HD	28480	2200-0015
13	2360-0017	5	SCREW, MACH, 6-32, .375-IN LG, PAN HD	28480	2360-0017
14	0515-1331	5	SCREW, METRIC 4 X 6 SPCL FLAT HD *	28480	0515-1331
	2510-0192	6	SCREW, 8-32, .25-IN-LG 100 DEG FLAT HD **	28480	2510-0192
15	0515-0907	9	SCREW, METRIC 3.0 X 8 FLAT HD *	28480	0515-0907
	2360-0116	5	SCREW, 6-32 .312-IN-LG, 82 DEG FLAT HD **	28480	2360-0116
16	85660-00019	3	MOUNT, ATTENUATOR	28480	85660-0001
17	5020-0137	3	SCREW, MACH, 2-56, .75-IN LG, PAN HD	28480	5020-0137
18	2190-0680	7	WASHER, LOCK, HLCL, NO. 2 (FOR SCREW (17))	28480	2190-0680
19	85660-20072	0	MOUNT, MICROCIRCUIT	28480	85660-2007
20	2360-0119	8	SCREW, MACH, 6-32, .438-IN LG, PAN HD	28480	2360-0119
21	85660-00033	1	INSULATOR, PC BOARD, PLASTIC	28480	85660-0003
22	1600-0367	7	METAL LOCK LINK, STAINLESS STEEL	28480	1600-0367
23	0515-0887	4	SCREW, METRIC 3.5 X 6 PAN HD *	28480	0515-0887
	2360-0330	5	SCREW, 6-32, .188-IN-LG, PAN HD **	28480	2360-0330
24	5021-5837	2	STRUT, CORNER, 18-IN *	28480	5021-5837
	5020-8837	6	STRUT, CORNER, 18-1N **	28480	5020-8837
25	2200-0139	4	SCREW, 4-40 .25 IN-LG PAN HD	28480	2200-0139
26	2360-0115	4	SCREW, MACH, 6-32, .312-IN LG, PAN HD	28480	2360-0115
27	85660-00116	1	FAN HOUSING TOP (SERIAL NUMBERS: 2747A05729 AND ABOVE)	28480	85660-0011
	85660-60357	8	FAN HOUSING REPLACEMENT KIT (SERIAL NUMBERS: 2410A00001-2747A05728)	28480	85660-6035
28	2360-0268	8	LUG, TERMINAL, GROUND	28480	2360-0268
29	1400-0907	7	CLAMP, WIRE	05683	3/16-HFR
30	2190-0003	8	WASHER, LOCK, HLCL, NO. 4 (FOR SCREW (4))	28480	2190-0003

* Serial Numbers 2516A03432 and above.
** Serial Numbers 2410A00101 to 2503A03431.

Figure 6. RF Section Parts Identification, Top View (2 of 2)

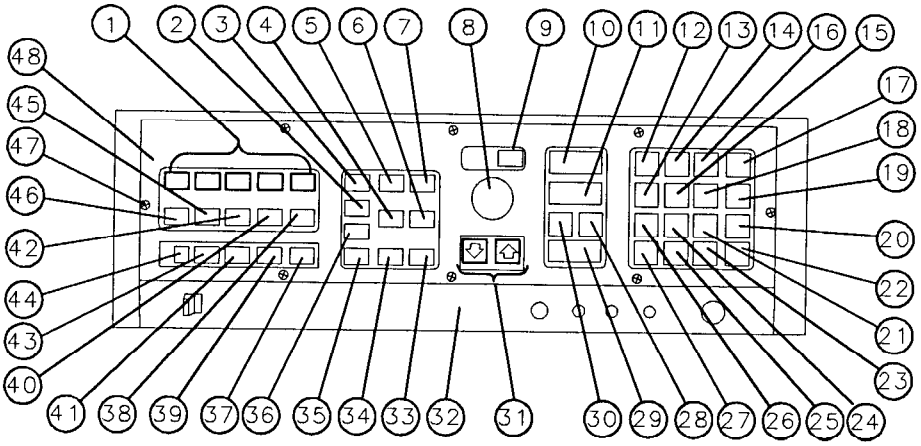

Item	HP Part Number	CD	Description	Mfr Code	Mfr Par Numbe
1	5041-0706	6	KEY, [AUTO]	28480	5041-070
2	5041-0712	4	KEY, [MKR→CF]	28480	5041-071
3	5041-0938	6	KEY, [PEAK SEARCH]	28480	5041-0938
4	5041-0716	8	KEY, [▲]	28480	5041-0716
5	5041-0692	9	KEY, [OFF]	28480	5041-0692
6	5041-0717	9	KEY, [ZOOM]	28480	5041-0717
7	5041-0698	5	KEY, [NORMAL]	28480	5041-0698
8	0370-3069	2	KNOB, ROUND, RPG, DATA CONTROL	28480	0370-3069
9	5041-0725	9	KEY, [HOLD]	28480	5041-0725
10	5041-0673	6	KEY, [CENTER FREQUENCY]	28480	5041-0673
11	5041-0674	7	KEY, [FREQUENCY SPAN]	28480	5041-0674
12	5041-0751	1	KEY, [7]	28480	5041-0751
13	5041-0748	6	KEY, [4]	28480	5041-0748
14	5041-0752	2	KEY, [8]	28480	5041-0752
15	5041-0749	7	KEY, [5]	28480	5041-0749
16	5041-0753	3	KEY, [9]	28480	5041-0753
17	5041-0727	1	KEY, [GHz +dBm dB]	28480	5041-0727

Figure 7. RF Section Parts Identification, Front Panel, Front View (1 of 2)

Item	HP Part Number	CD	Description	Mfr Code	Mfr Part Number
18	5041-0750	0	KEY, [6]	28480	5041-0750
19	5041-0728	2	KEY, [MHz −dBm sec]	28480	5041-0728
20	5041-0729	3	KEY, [kHz mV msec]	28480	5041-0729
21	5041-0828	3	KEY, [3]	28480	5041-0828
22	5041-0730	6	KEY, [Hz μV μsec]	28480	5041-0730
23	5041-0757	7	KEY, [BACK SPACE]	28480	5041-0757
24	5041-0827	2	KEY, [2]	28480	5041-0827
25	5041-0755	5	KEY, [.]	28480	5041-0755
26	5041-0826	1	KEY, [1]	28480	5041-0826
27	5041-0754	4	KEY, [0]	28480	5041-0754
28	5041-0669	0	KEY, [STOP FREQ]	28480	5041-0669
29	5041-0675	8	KEY, [REFERENCE LEVEL]	28480	5041-0675
30	5041-0668	9	KEY, [START FREQ]	28480	5041-0668
31	5041-0756	6	KEY, [↑] [↓]	28480	5041-0756
32	85660-00112	7	PANEL, DRESS, LOWER FRONT	28480	85660-00112
33	5041-0937	5	KEY, [SIGNAL TRACK]	28480	5041-0937
34	5041-0917	1	KEY, [PRESEL PEAK]	28480	5041-0917
35	5041-0715	7	KEY, [MKR→REF LVL]	28480	5041-0715
36	5041-0714	6	KEY, [MKR/Δ→ STP SIZE]	28480	5041-0714
37	5041-0724	8	KEY, [2-22 GHZ]	28480	5041-0724
38	5041-0711	3	KEY, [CF STEP SIZE]	28480	5041-0711
39	5041-0723	7	KEY, [0-2.5 GHZ]	28480	5041-0723
40	5041-0710	2	KEY, [ATTEN]	28480	5041-0710
41	5041-0775	9	KEY, [RECALL]	28480	5041-0775
42	5041-0709	9	KEY, [SWEEP TIME]	28480	5041-0709
43	5041-0095	6	KEY, [SAVE]	28480	5041-0095
44	5041-0726	0	KEY, [LCL]	28480	5041-0726
45	5041-0708	8	KEY, [VIDEO BW]	28480	5041-0708
46	5041-0707	7	KEY, [RES BW]	28480	5041-0707
47	0624-0264	2	SCREW, 4-40, .312-IN-LG FLAT HD	28480	0624-0264
48	85680-00011	9	PANEL, SUB, UPPER FRONT, RF SECTION	28480	85680-00011
	85660-00113	8	PANEL, DRESS, UPPER FRONT (COVERS (48))	28480	85660-00113

Figure 7. RF Section Parts Identification, Front Panel, Front View (2 of 2)

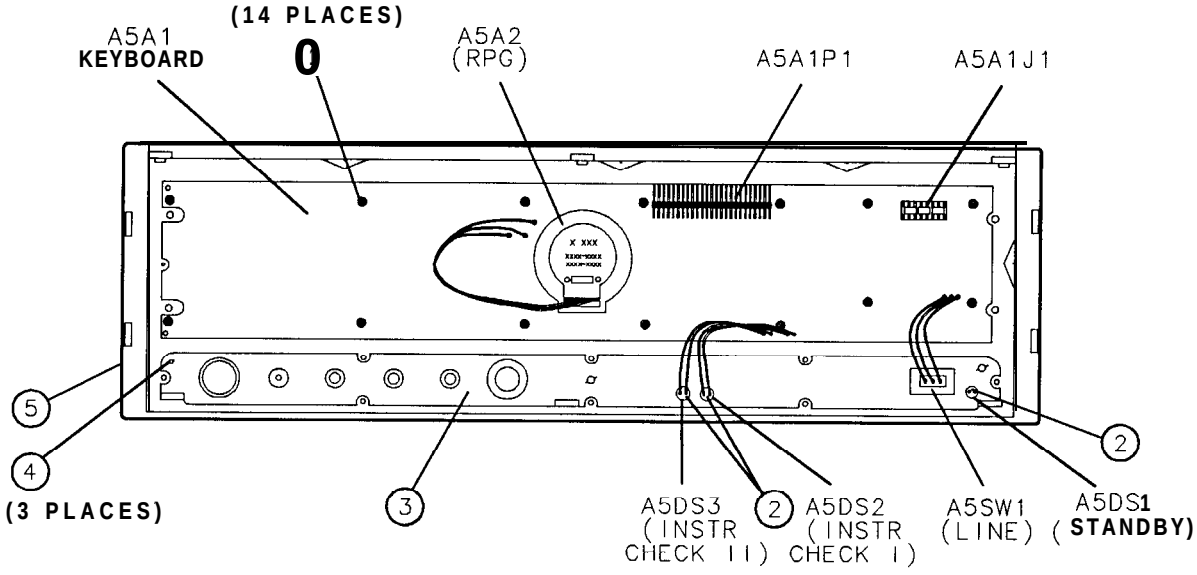

Item	HP Part Number	CD	Description	Mfr Code	Mfr Part Number
1	2200-0103	2	SCREW, MACH, 4-40, .24-1N LG, PAN HD	28480	2200-0103
2	85680-40004	4	MOUNT, LED (FOR INSTR CHECK LEDS)	28480	85680-40004
3	85660-00056	8	PANEL, SUB, LOWER FRONT	28480	85660-00056
4	0510-1148	2	RETAINER, PUSH-ON (TO ATTACH DRESS PANELS)	28480	0510-1148
5	5021-8699	0	BEZEL, FRONT, RF SECTION *	28480	5021-8699
	85680-20125	8	BEZEL, FRONT, RF SECTION **	28480	85680-20125

* Serial Numbers 2516A03432 and above.

** Serial Numbers 2410A00101 to 2503A03431.

Figure 8. RF Section Parts Identification, Front Panel

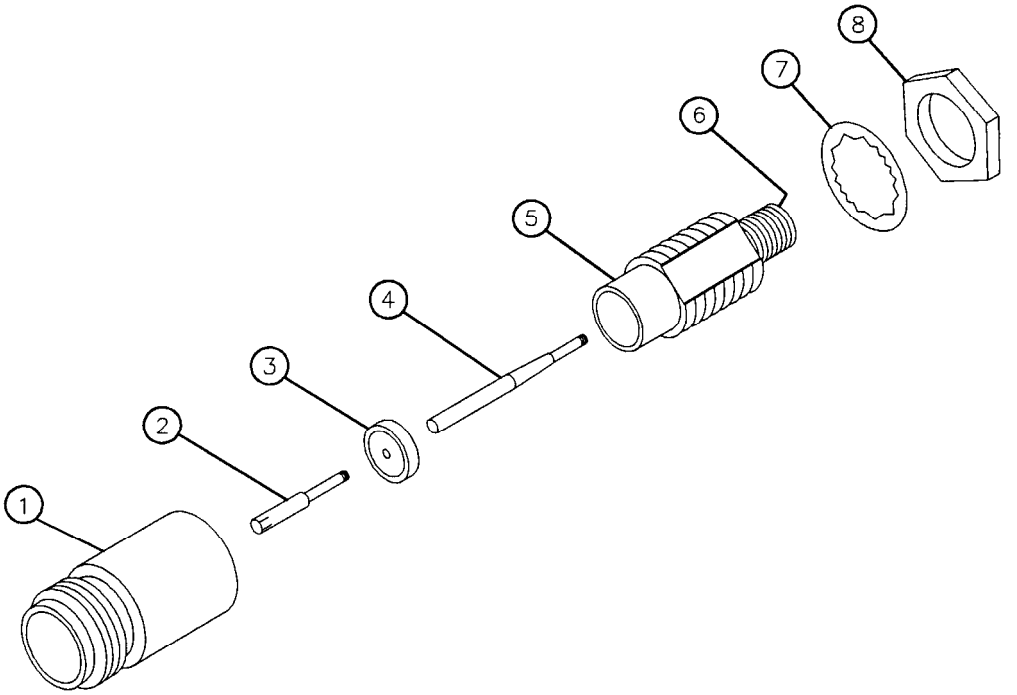

Item	HP Part Number	CD	Description	Mfr Code	Mfr Part Number
A6J3	86290-60005	7	CONNECTOR ASSEMBLY (TYPE N)	28480	86290-60005
1	1250-1577	0	BODY: RF CONNECTOR (TYPE N)	02660	131-150
2	1250-0915	8	CONTACT: RF CONNECTOR (TYPE N)	02660	131-149
3	5040-0306	0	INSULATOR	28480	5040-0306
4	08555-20093	5	CENTER CONDUCTOR	28480	08555-20093
5	08555-20094	6	BODY: BULKHEAD	28480	08555-20094
6	08761-2027	4	INSULATOR	28480	08761-2027
7	2190-0104	0	WASHER: LOCK 0.439-IN ID	28480	2190-0104
8	2950-0132	6	NUT: HEX 7/16-28	28480	2950-0132

Figure 9. RF Input Connector, Parts Identification

Major Assembly and Component Locations

Major Assembly and Component Locations

Assembly	Location	Assembly	Location
ACLU	A6A5	Phase Lock Loop 2 Discriminator	A10A8
Controller	A15	Phase Lock Loop 2 Divider	A10A7
Coupler/Isolator/Amplifier (CIA)	A11A1	Phase Lock Loop 2 Phase Detector	A10A6
Digital Analog Converter (DAC)	A19	Phase Lock Loop 2 VCO	A10A5
FM Coil Driver	A21	Phase Lock Loop 3 Up Converter	A10A4
Fan	A24	Positive Regulator	A17
First Converter	A6A6	RF Module	A6
Front Panel	A5	RF Module Motherboard	A6A13
Front Panel Interface	A12	Rotary Pulse Generator (RPG)	A5A2
Interconnect	A11A2	Rectifier	A8
Keyboard	A5A1	Reference Phase Detector	A7A1
Last Converter	A6A3	Sampler	A11A5
Line Module	A9	Scan Generator	A16
M/N Output	A7A4	Second Converter	A6A4
M/N Phase Detector	A7A3	Slope Generator	A6A11
M/N Reference	A7	STANDBY/ON Switch	A5S1
M/N Reference Motherboard	A7A5	YIG-TUNED MIXER (YTX)	A6A8
Main Coil Driver	A20	YTO Loop	A11
Miscellaneous Bias/Relay Driver	A6A10	YTO Phase Detector	A11A4
Motherboard	423	YTX Current Driver	A6A7
Negative Regulator	418	YTX Driver	A6A12
Phase Lock	A6A9	6.2 GHz Low-Pass Filter	A11A7
Phase Lock Loop 1 Divider	A10A2	10 MHz Frequency Standard	A22
Phase Lock Loop 1 IF	A10A3	20/30 Synthesizer	A10
Phase Lock Loop 1 VCO	A10A1	100 MHz VCXO	A7A2

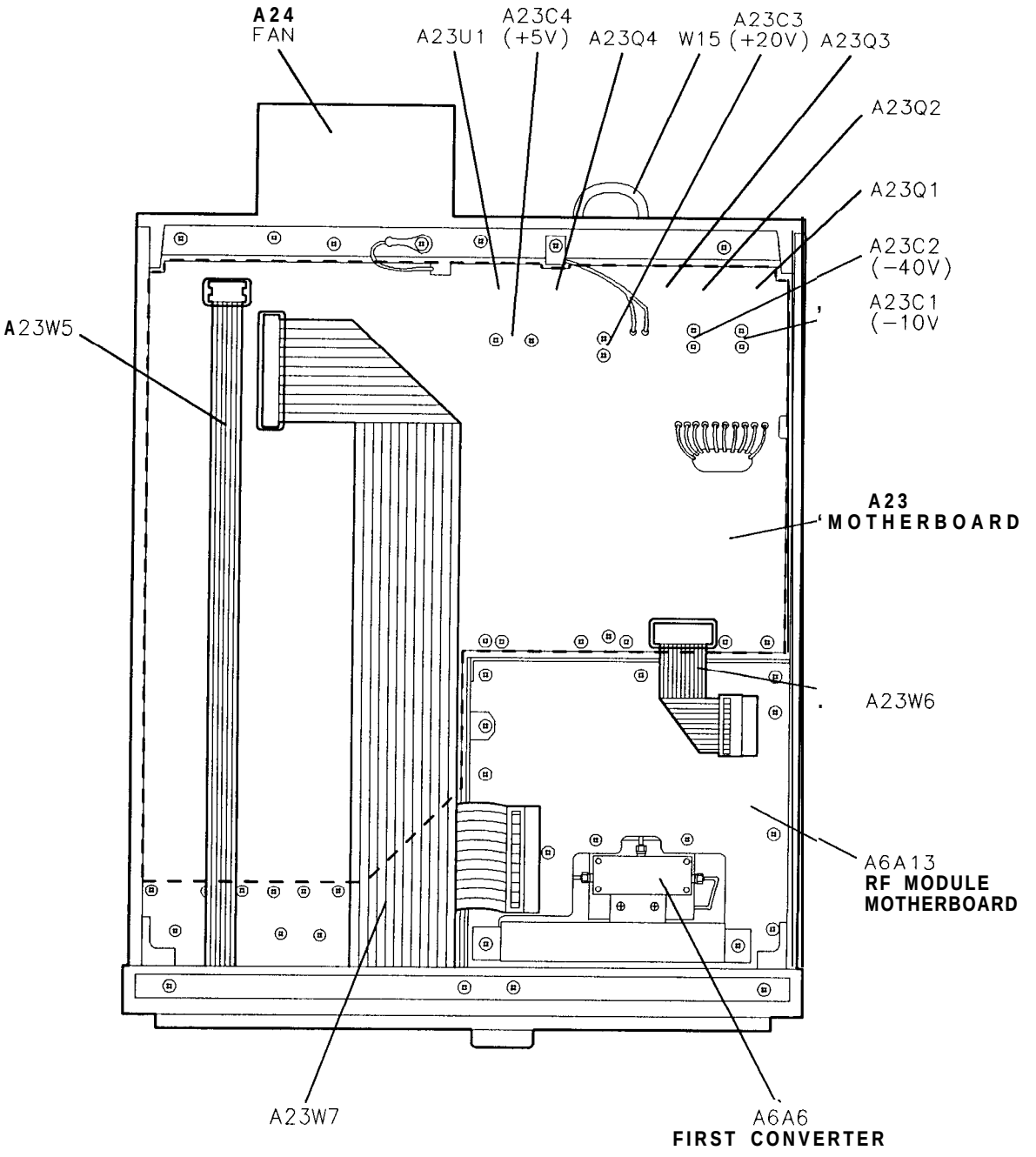

Figure 1. Major Assembly and Component Locations, Bottom View

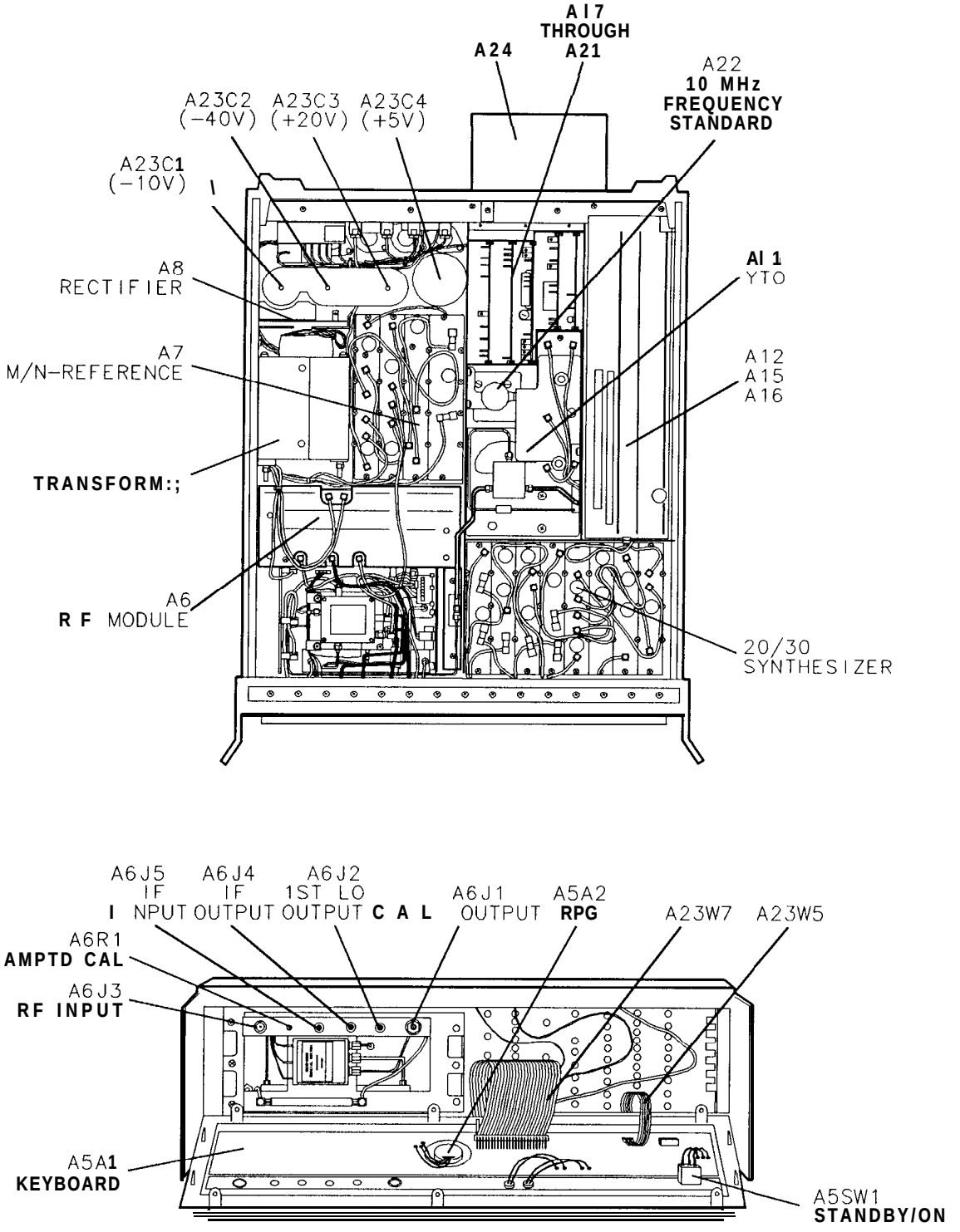

Figure 2. Major Assembly and Component Locations, Top and Front Views

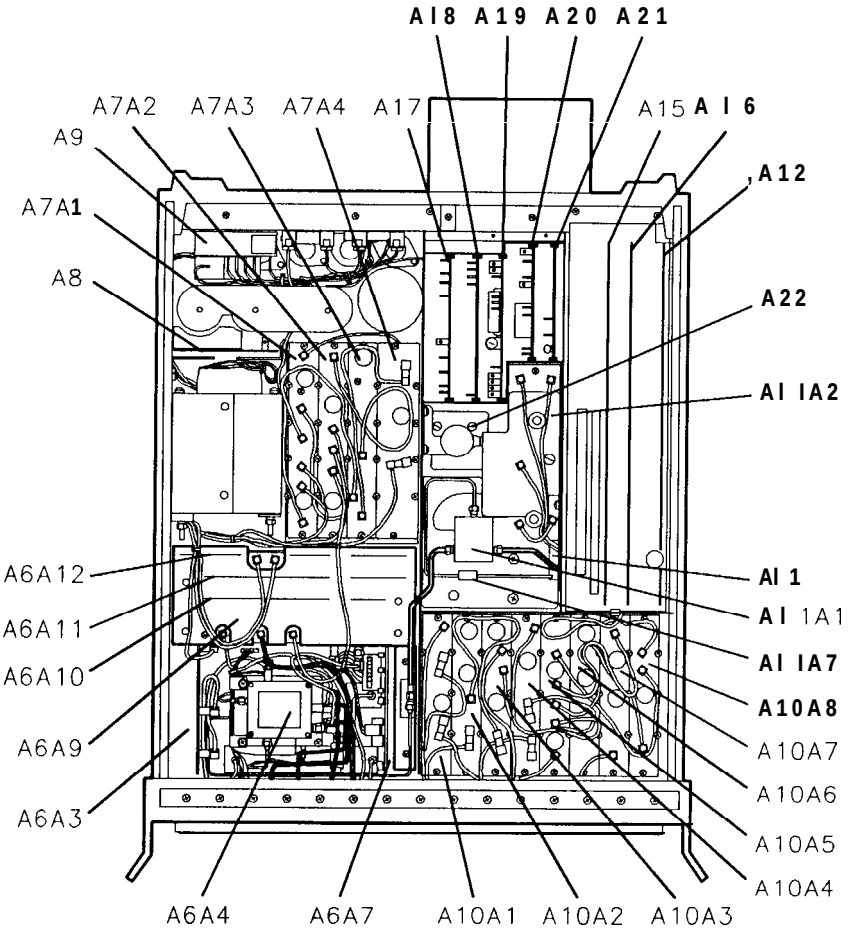

Figure 3. Major Assemby and Component Locations, Top View

Table 1-2. Hewlett-Packard Sales and Service Offices

US FIELD OPERATIONS HEADQUARTERS
Kewlett-Packard Company
19320 Pruneridge Avenue
Cupertino, CA 95014, USA
(408) 973-1919

California
Hewlett-Packard Co.
1421 South Manhattan Ave.
Fullerton, CA 92631
(714) 999-6700

Hewlett-Packard Co.
301 E. Evelyn
Mountain View, CA 94041
(415) 694-2000

Colorado
Hewlett-Packard Co.
24 Inverness Place, East
Englewood, CO 80112
(303) 649-5000

Georgia
Hewlett-Packard Co.
1000 South Park Place
Atlanta, GA 30339
(404) 955- 1500

Illinois
Hewlett-Packard Co.
5201 Tollview Drive
Rolling Meadows, IL 60008
(708) 255-9800

New Jersey
Hewlett-Packard Co.
120 W. Century Road
Paramus, NJ 07653
(201) 599-5000

Texas
Hewlett-Packard Co.
930 E. Campbell Rd.
Richardson, TX 75081
(214) 231-6101

EUROPEAN OPERATION HEADQUARTERS
Hewlett-Packard S.A.
150, Route du Nant-d'Avril
1217 Meyrin 2/Geneva
Switzerland
(41 22) 780.8111

France
Hewlett-Packard France
1 Avenue Du Canada
Zone D'Activite De Courtaboeuf
F-91947 Les Ulis Cedex
France
(33 1) 69 82 60 60

Germany
Hewlett-Packard GmbH
Berner Strasse 117
6000 Frankfurt 56
West Germany
(49 69) 500006-O

Great Britain
Hewlett-Packard Ltd.
Eskdale Road, Winnersh Triangle
Wokingham, Berkshire RG11 5DZ
England
(44 734) 696622

INTERCON OPERATIONS HEADQUARTERS
Hewlett-Packard Company
3495 Deer Creek Rd.
Palo Alto, California 94304-1316
(415) 857-5027

Australia
Hewlett-Packard Australia Ltd.
31-41 Joseph Street
Blackburn, Victoria 3130
(61 3) 895-2895

Canada
Hewlett-Packard (Canada) Ltd.
17500 South Service Road
Trans-Canada Highway
Kirkland, Quebec H9J 2X8
Canada
(514) 697-4232

Japan
Yokogawa-Hewlett-Packard Ltd.
1-27-15 Yabe, Sagamihara
Kanagawa 229, Japan
(81 427) 59-1311

People's Republic of China
China Hewlett-Packard, Ltd.
38 Bei San Huan Xl Road
Shuang Yu Shu
Hai Dian District
Beijing, China
(86 1) 256-6888

Singapore
Hewlett-Packard Singapore Pte. Ltd.
1150 Depot Road
Singapore 0410
(65) 273 7388

Taiwan
Hewlett-Packard Taiwan
8th Floor, H-P Building
337 Fu Hsing North Road
Taipei, Taiwan
(886 2) 712-0404



HP Part No. 85660-90210
Printed in USA