TS-5020 and TS-5040 Compact Functional Test System

KEYSIGHT

SITE PREPARATION AND INSTALLATION GUIDE

THIS PAGE HAS BEEN INTENTIONALLY LEFT BLANK.

Notices

Manual Part Number

E2240-90000

Edition

Edition 5, October 2023

Printed in Malaysia

Keysight Technologies Microwave Products
(Malaysia) Sdn. Bhd.
Bayan Lepas Free Industrial Zone
11900 Penang, Malaysia.

Technical Assistance

You can find information about technical and professional services, product support, and equipment repair and service on the Web:

http://www.keysight.com/contacts/English/noscript.html

Double-click the link to **Test & Measurement**. Select your country from the drop-down menus. The Web page that appears next has contact information specific for your country.

If you do not have access to the Internet, call one of the numbers in Table 1.

Table 1 Keysight Call Centers

United States and Canada:	Test and Measurement Call Center (800) 452 4844 (toll-free in US)
Europe:	(41 22) 780 8111
Japan:	Measurement Assistance Center (81) 0426 56 7832
Latin America:	305 269 7548
Asia-Pacific:	(85 22) 599 7777
United States and Canada:	Test and Measurement Call Center (800) 452 4844 (toll-free in US)

Contents

List of Figures

THIS PAGE HAS BEEN INTENTIONALLY LEFT BLANK.

List of Tables

THIS PAGE HAS BEEN INTENTIONALLY LEFT BLANK.

1 Legal Information

KEYSIGHT TECHNOLOGIES

Legal Information

Warranty

The material contained in this document is provided “as is,” and is subject to being changed, without notice, in future editions. Further, to the maximum extent permitted by applicable law, Keysight disclaims all warranties, either express or implied, with regard to this manual and any information contained herein, including but not limited to the implied warranties of merchantability and fitness for a particular purpose. Keysight shall not be liable for errors or for incidental or consequential damages in connection with the furnishing, use, or performance of this document or of any information contained herein. Should Keysight and the user have a separate written agreement with warranty terms covering the material in this document that conflict with these terms, the warranty terms in the separate agreement shall control.

Technology Licenses

The hardware and/or software described in this document are furnished under a license and may be used or copied only in accordance with the terms of such license.

Restricted Rights Legend

If software is for use in the performance of a U.S. Government prime contract or subcontract, Software is delivered and licensed as “Commercial computer software” as defined in DFAR 252.227-7014 (June 1995), or as a “commercial item” as defined in FAR 2.101(a) or as “Restricted computer software” as defined in FAR 52.227-19 (June 1987) or any equivalent agency regulation or contract clause. Use, duplication or disclosure of Software is subject to Keysight Technologies’ standard commercial license terms, and non-DOD Departments and Agencies of the U.S. Government will receive no greater than Restricted Rights as defined in FAR 52.227-19(c)(1-2)(June 1987). U.S. Government users will receive no greater than Limited Rights as defined in FAR 52.227-14 (June 1987) or DFAR 252.227-7015 (b)(2)(November 1995), as applicable in any technical data.

Service And Support

Any adjustment, maintenance, or repair of this product must be performed by qualified personnel. Contact your customer engineer through your local Keysight Technologies Service Center.

Keysight On The Web

You can find information about technical and professional services, product support, and equipment repair and service on the Web:
http://www.keysight.com/

Double-click the link to **Test & Measurement**. Select your country from the drop-down menus. The Web page that appears next has contact information specific for your country

Keysight By Phone

If you do not have access to the Internet, call one of the numbers in Table 1-1.

Table 1-1 Keysight Call Centers and Regional Headquarters

United States and Canada:	Test and Measurement Call Center (800) 452 4844 (toll-free in US)
Europe:	(41 22) 780 8111
Japan:	Measurement Assistance Center (81) 0426 56 7832
Latin America:	305 269 7548
Asia-Pacific:	(85 22) 599 7777

Manufacturing Address

Keysight Technologies Microwave Products (Malaysia) Sdn. Bhd.

Bayan Lepas Free Industrial Zone,

11900 Penang,

Malaysia.

THIS PAGE HAS BEEN INTENTIONALLY LEFT BLANK.

2 Safety and Regulatory Information

KEYSIGHT TECHNOLOGIES

Safety Information

Safety Summary

The following general safety precautions must be observed during all phases of operation of this instrument. Failure to comply with these precautions or with specific warnings elsewhere in this manual violates safety standards of design, manufacture, and intended use of the instrument. Keysight Technologies assumes no liability for the customer's failure to comply with these requirements.

Safety Notice

CAUTION

A **CAUTION** notice denotes a hazard. It calls attention to an operating procedure, practice, or the like, that, if not correctly performed or adhered to, could result in damage to the product or loss of important data. Do not proceed beyond a **CAUTION** notice until the indicated conditions are fully understood and met.

WARNING

A WARNING notice denotes a hazard. It calls attention to an operating procedure, practice, or the like that, if not correctly performed or adhered to, could result in personal injury or death. Do not proceed beyond a WARNING notice until the indicated conditions are fully understood and met.

General

This product is provided with a protective earth terminal. The protective features of this product may be impaired if it is used in a manner not specified in the operation instructions.

WARNING

DO NOT OPERATE IN AN EXPLOSIVE ATMOSPHERE. Do not operate the product in the presence of flammable gases or flames.

WARNING

DO NOT REMOVE RACK PANELS OR INSTRUMENT COVERS. Operating personnel must not remove any rack panels or instrument covers. Component replacement and internal adjustments must be made only by qualified service personnel. Products that appear damaged or defective should be made inoperative and secured against unintended operation until they can be repaired by a qualified service personnel.

WARNING The protection provided by the TS-5020 system may be impaired if the system is used in a manner not specified by Keysight.

Environmental Conditions

The TS-5020 Automotive Electronics Functional Test System and the TS-5040 Compact Functional Test System are designed for indoor use only. Table 2-1 shows general environmental requirements.

Table 2-1 Environment Requirements

Environment Conditions	Requirements
Maximum Altitude	2000 meters
Temperature (Operation)	5°C to 40°C
Maximum Relative Humidity	The test system is designed to operate in the range from 50% to 80% relative humidity (non-condensing).

CAUTION This product is designed for use in Installation Category II and Pollution Degree 2, per IEC 61010-1 and 664 respectively.

Before Applying Power

Verify that the product is set to match the available line voltage and all safety precautions are taken. Note the external markings of the instruments described in “Safety Symbols and Regulatory Markings”.

Ground The System

To minimize shock hazard, the instrument chassis and cover must be connected to an electrical protective earth ground. The instrument must be connected to the ac power mains through a grounded power cable, with the ground wire firmly connected to an electrical ground (safety ground) at the power outlet. Any interruption of the protective (grounding) conductor or disconnection of the protective earth terminal will cause a potential shock hazard that could result in personal injury.

Fuses

Use only fuses with the required rated current, voltage, and specified type (normal blow, time delay). Do not use repaired fuses or short-circuited fuse holders. To do so could cause a shock or fire hazard.

WARNING In order to aviod electrical hazards, all system internal fuses must be replaced by trained and qualified personnel.

Operator Safety Information

WARNING Module connectors and Test Signal cables connected to them cannot be operator accessible.

Cables and connectors are considered inaccessible if a tool (e.g. screwdriver, wrench, socket, etc.) or a key (equipment in a locked cabinet) is required to gain access to a conductive surface connected to any cable conductor (High, Low or Ground).

WARNING Assure the equipment under test has adequate insulation between the cable connections and any operator-accessible parts (doors, covers, panels shields, cases, cabinets, etc.)

Verify there are multiple and sufficient protective means (rated for the voltages you are applying) to assure the operator will NOT come into contact with any energized conductor even if one of the protective means fails to work as intended. For example, the inner side of a case, cabinet, door cover or panel can be covered with an insulating material as well as routing the test cables to the front panel connectors of the module through non-conductive, flexible conduit such as that used in electrical power distribution.

Safety Symbols and Regulatory Markings

Symbols and markings on the system, in manuals and on instruments alert you to potential risks, provide information about conditions, and comply with international regulations. Table 2-2 defines the symbols and markings you may find in a manual or on an instrument.

Table 2-2 Safety Symbols and Regulatory Markings

Safety symbols	
	Warning: risk of electric shock.
	Warning: hot surface
	Caution: refer to accompanying documents.
	Laser radiation symbol: marked on products that have a laser output.
	Alternating current.
	Both direct and alternating current.
3	Three-phase alternating current.
	Earth (ground) terminal
	Protective earth (ground) terminal
	Frame or chassis terminal
	Terminal is at earth potential. Used for measurement and control circuits designed to be operated with one terminal at earth potential.
N	Terminal for neutral conductor on permanently installed equipment.
L	Terminal for line conductor on permanently installed equipment.
	Standby (supply); units with this symbol are not completely disconnected from ac mains when this switch is off. To completely disconnect the unit from ac mains, either disconnect the power cord, or have a qualified electrician install an external switch.
	Switch setting indicator = Off = On
Regulatory markings	
	The CE mark is a registered trademark of the European Community. If it is accompanied by a year, it indicates the year the design was proven.

Safety symbols	
	The CSA mark is a registered trademark of the Canadian Standards Association.
N10149	The C-tick mark is a registered trademark of the Spectrum Management Agency of Australia. This signifies compliance with the Australian EMC Framework regulations under the terms of the Radio Communications Act of 1992.
ISM - 1A	This text indicates that the instrument is an Industrial Scientific and Medical Group 1 Class A product (CISPER 11, Clause 4).

Declaration of Conformity

The Declaration of Conformity (DoC) for this instrument is available on the Keysight website. You can search the DoC by its product model or description at the web address below.

http://www.keysight.com/go/conformity

NOTE **If you are unable to search for the respective DoC, contact your local Keysight representative.**

Electrostatic Discharge (ESD) Precautions

Static electricity is destructive to your production process and the TS-5020. Careless handling and poor site planning can cause system reliability problems and reduce your product yield. The system may not be as easily damaged as the modules you will be testing, but good anti-static planning will help ensure high reliability.

The ESD symbol below indicates areas where ESD caution must be exercised. This is to prevent damage to instruments and/or test disruption.

ESD Symbol	
	**Caution: Static Sensitive**. Electrostatic discharge in this area may cause equipment damage or test disruption.

While not an exhaustive list of anti-static precautions, Table 2-3 shows suggestions to consider as you plan your system area:

Table 2-3 Suggested Anti-Static Solutions for Site Planning

Precaution	Suggested Solution
Anti-static flooring	Plan to use an anti-static floor covering or mats.
Grounding straps	Plan for foot straps in conjunction with anti-static flooring and wrist straps for system operators.

CAUTION The system test rack is secured to the pallet of the shipping crate and wrapped with a plastic wrap. Do not move the crate or the test rack and pallet to a static sensitive area until you have removed the plastic wrap from the test rack.

End of Life: Waste Electrical and Electronic Equipment (WEEE) Directive 2002/96/EC

This product complies with the WEEE Directive (2002/96/EC) marking requirement. The affixed product label (see below) indicates that you must not discard this electrical/electronic product in domestic household waste.

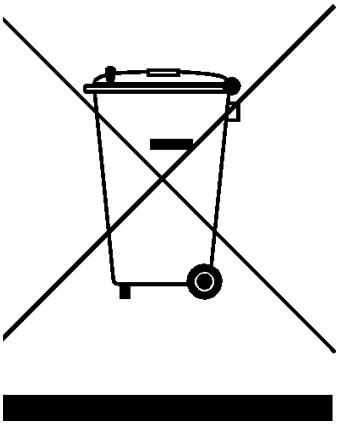

Product Category:

With reference to the equipment types in the WEEE directive Annex 1, this product is classified as a “Monitoring and Control Instrumentation” product.

Do not dispose in domestic household waste

To return unwanted products, contact your local Keysight office, or see:

http://www.keysight.com/environment/product

for more information.

THIS PAGE HAS BEEN INTENTIONALLY LEFT BLANK.

3 Site Preparation and Power Requirements

KEYSIGHT TECHNOLOGIES

Preparing Your Site for the System

WARNING

No operator serviceable parts inside. Refer servicing to qualified personnel. To prevent electrical shock do not remove instrument covers.

The protection provided by the TS-5020 system and the TS-5040 system may be impaired if used in a manner not specified by Keysight.

Typical System

Figure 3-1 shows a typical hardware configuration of the TS-5020 Automotive Electronics Functional Test system.

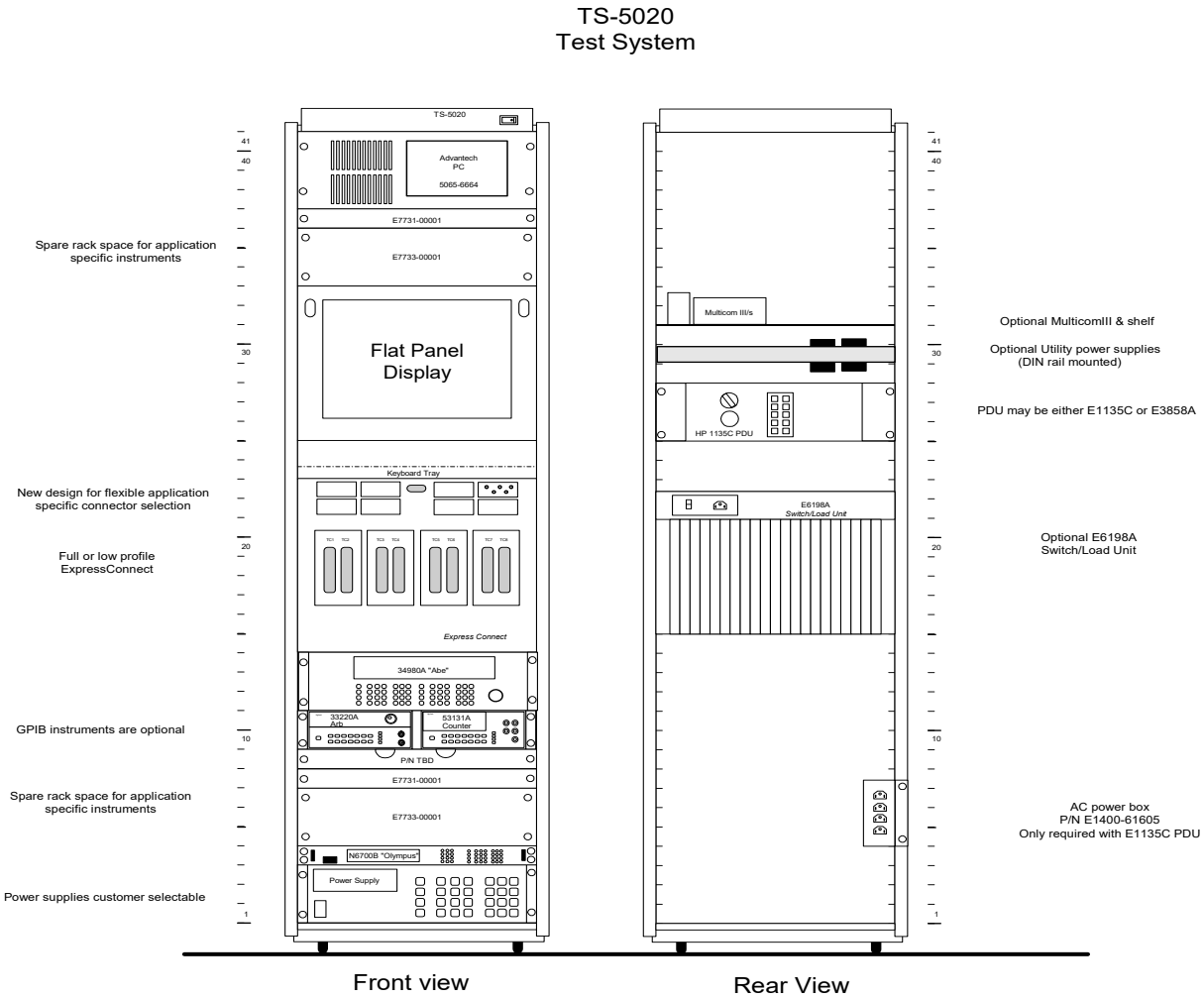

Figure 3-1 TS-5020 Automotive Electronics Functional Tests System

Figure 3-2 shows the TS-5040 (rear mount) system rack layout and rack dimensions.

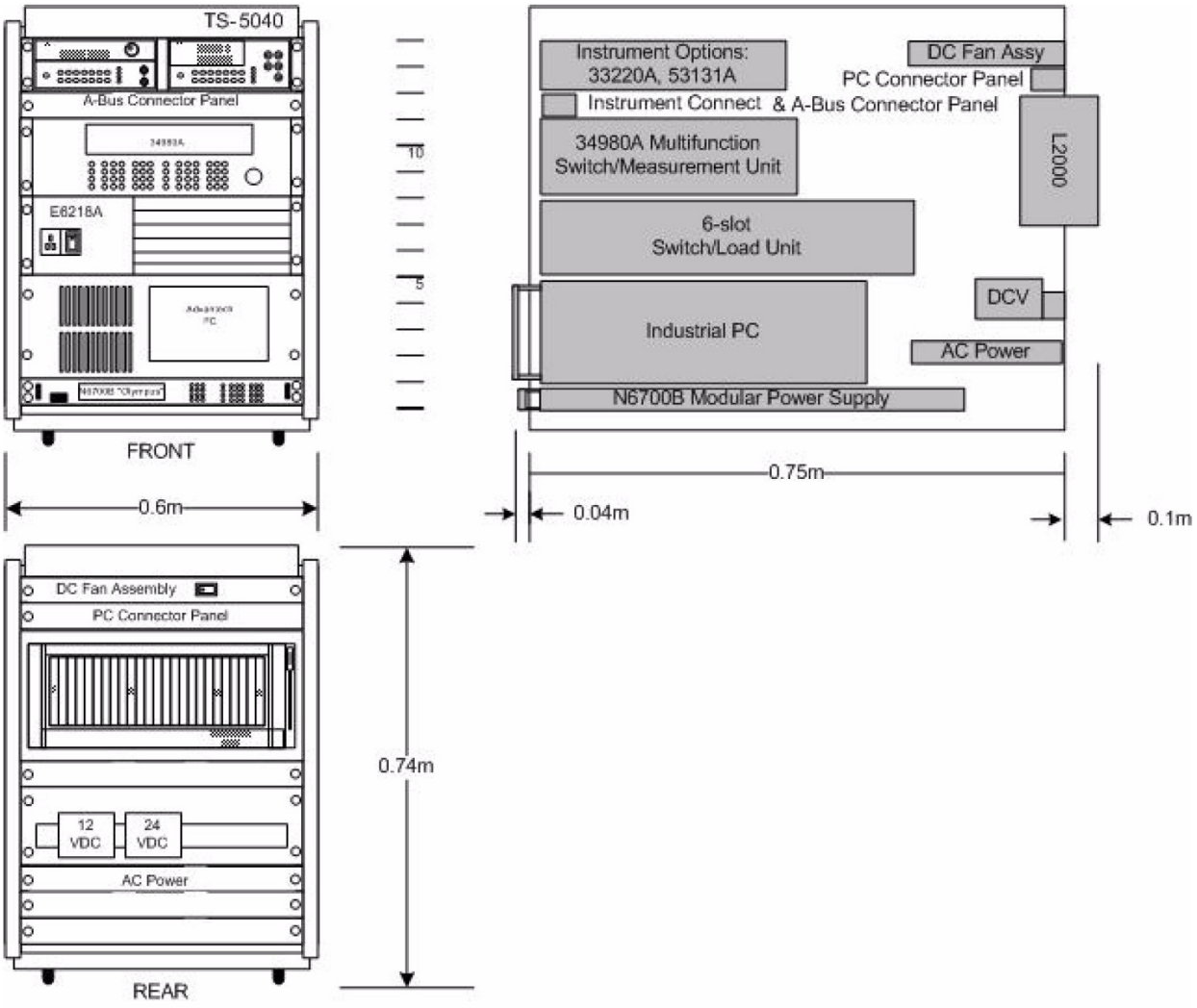

Figure 3-2 TS-5040 Rack Layout (Rear Mount)

Figure 3-3 shows the TS-5040 (top mount) system rack layout and rack dimensions.

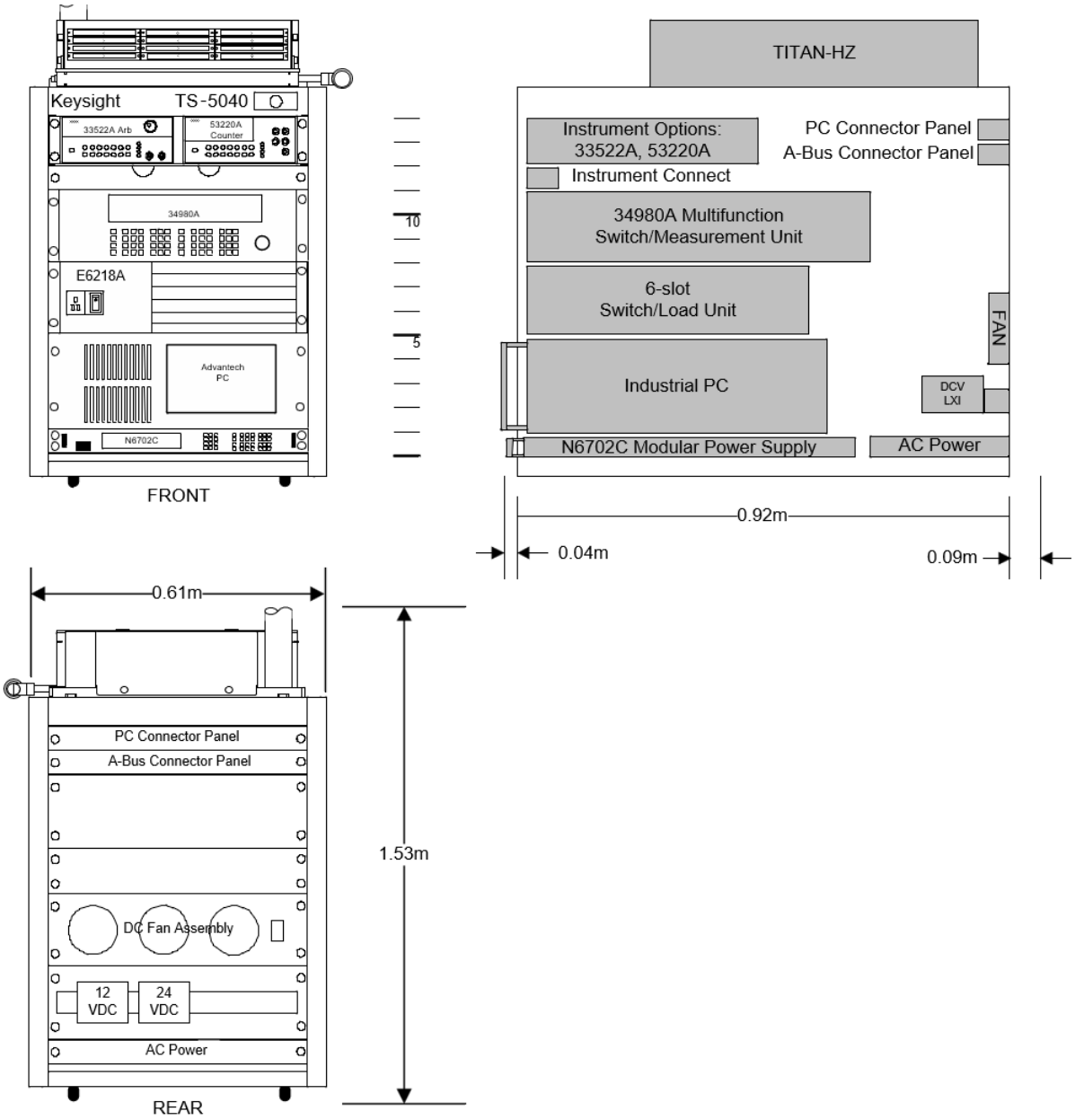

Figure 3-3 TS-5040 Rack Layout (Top Mount)

System Dimensions

Table 3-1 shows the rack dimensions for the test systems.

Table 3-1 Test System Rack Dimensions

Test System	Size	No. of Bays per Pallet	Height	Width	Depth	Estimated Weight
TS-5020	2.00 m	1	2020 mm (79.5 in.)	600 mm (23.6 in.)	905 mm (35.6 in.)	600 lbs
TS-5040 (Top Mount)	1.55 m	1	1525 mm (60.0 in.)	610 mm (24.0 in.)	965 mm (38.0 in.)	410 lbs
TS-5040 (Rear Mount)	0.75 m	1	745 mm (29.3 in.)	610 mm (24.0 in.)	1050 mm (41.3 in.)	410 lbs

System Plan Drawing

A system plan diagram should be used for all aspects of site preparation. A complete drawing details power availability, communications cabling, and system placement with respect to other equipment. It can also serve to verify physical access.

Figure 3-4 shows a recommended layout for a typical TS-5020 Automotive Electronics Functional Test System. Allow 1 meter (3.3 feet of space) behind the system for service.

For TS-5040, when emergency button on TS-5040 is pressed, the system rack turns off all equipment.

The Main ON/OFF Switch is located on the Keysight E1135C / E3858B Power Distribution Unit (PDU), located at rear bottom of system rack. ALWAYS allow 1 meter (3.3 feet of space) behind the system to be able to access the ON/OFF switch at the rear of E3858B PDU.

WARNING The Remote ON/Standby switch at the upper right-hand corner of the system rack turns off all equipment. The Main ON/OFF switch is located on the Keysight E1135C or E3858B Power Distribution Unit (PDU), located behind the rear cabinet door of the system (see Figure 3-6 and Figure 3-10). ALWAYS allow 1 meter (3.3 feet of space) behind the system to be able to access the ON/OFF switch at the rear of the E1135C PDU.

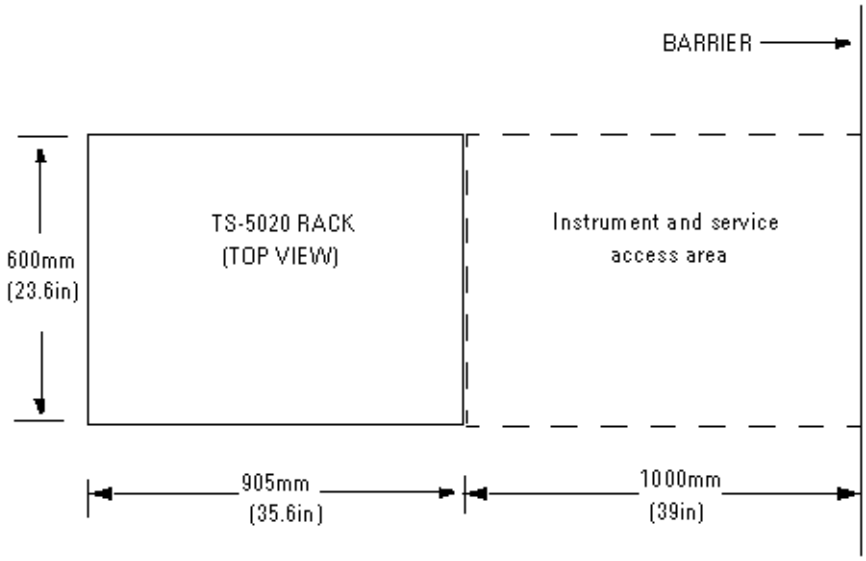

Figure 3-4 Recommended TS-5020 Automotive Electronics Functional Layout (overhead view)

Figure 3-2 shows a typical layout for a typical Keysight TS-5040 Automotive Functional Test System. If the operator will be positioned in front of the system, allow 1 meter (3.3 feet) of space in front of the system. You should allow 1 meter (3.3 feet) of space behind the system for service. The 0.75 meter rack is designed to fit under many production lines. Roll the system to its final position. Lower its leveling feet to stabilize the system and prevent it from moving.

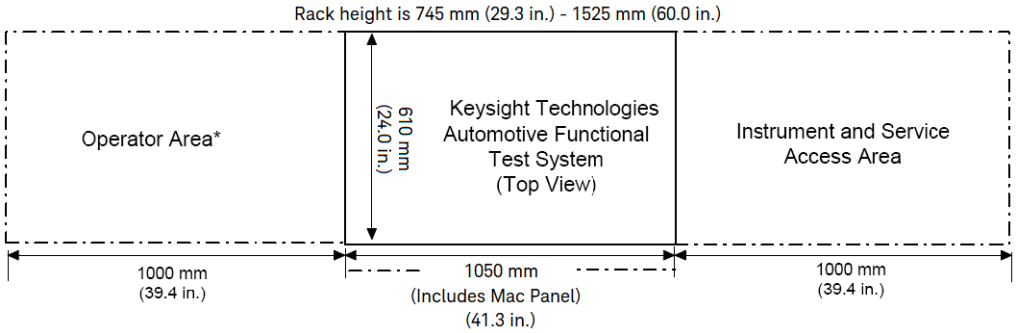

**For example purposes only. The operator does not have to be positioned in front of the system.*

Figure 3-5 Recommended TS-5040 Automotive Functional Test System Layout (overhead view)

System Power Requirements

The TS-5020 Automotive Electronics Functional Test System has been designed for use with either single-phase or three-phase AC voltage in the range of 100 to 240VAC ± 10% (see Table 3-2).

Figure 3-6 shows the location of the Keysight Power Distribution Unit (PDU) in your system.

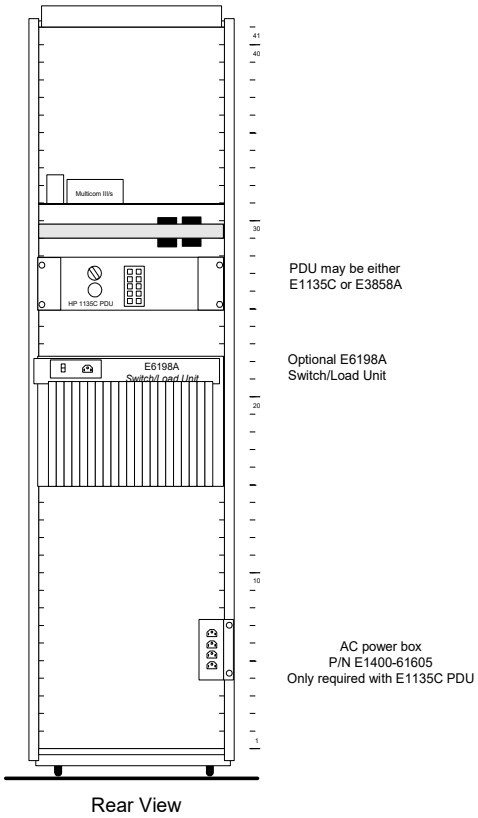

Figure 3-6 Rear View of The TS-5020 Automotive Electronics Functional Test System

Minimum Power Requirements

The following lists the minimum power requirements for the TS-5020 and TS-5040 Automotive Electronics Functional Test System:

- AC mains power must be supplied to the system's power distribution unit (PDU), either the Keysight E1135C or E3858B, depending on the option chosen.
- AC voltage and current ratings: see Table 3-2
- Power cord for all systems and options to be supplied by customer.

CAUTION Power cord must be wired by an electrician.

Table 3-2 AC Power Requirements

AC Frequency	AC Voltage Range	AC Current (max)	No. of Phase	PDU Supported
50 Hz/60 Hz	200 - 240 VAC	5 amps	Single Phase	E1135C or E3858B
	200 - 240 VAC	4 amps	Three Phase	E1135C only
	100 - 120 VAC	10 amps	Single Phase	E1135C or E3858B

Power Recommendations

- Provide a separate AC mains for the system due to the current requirements of the system.
- Use copper wire for the system drop between the AC source and system.
- For Keysight E1135C PDU, a jumper wire may need to be installed for some options. This PDU has a mains disconnect switch that serves as master power for the entire rack.
- In the case of E3858B, external power is plugged directly to the input connector on the right side of the E3858B (see Figure 3-7). The AC Mains switch serves as the master switch for the switched and unswitched AC outlets.
- The power service may have a mains disconnect installed adjacent to the system to quickly remove power in case of emergency (see "Mains Disconnect Requirements" on page 37 for more information).
- On the E1135C PDU is a 25.4mm (1in) hole to install a cable clamp and power cord. Use a power cord with a locking plug (one that cannot be easily pulled from its outlet) or hard-wire the system to the AC power. Customer is to provide both cable and strain relief (see Figure 3-8).
- To avoid electric shock, physically remove the mains plug from the power outlet before servicing.

CAUTION Verify the AC source and that service conductors are sized correctly before connecting the system.

WARNING Electrical Shock Hazard Protection. This is a Safety Class 1 Product (provided with a protective earthing ground incorporated in the power cord). The mains plug shall be inserted into only a socket outlet provided with a protective earth contact.

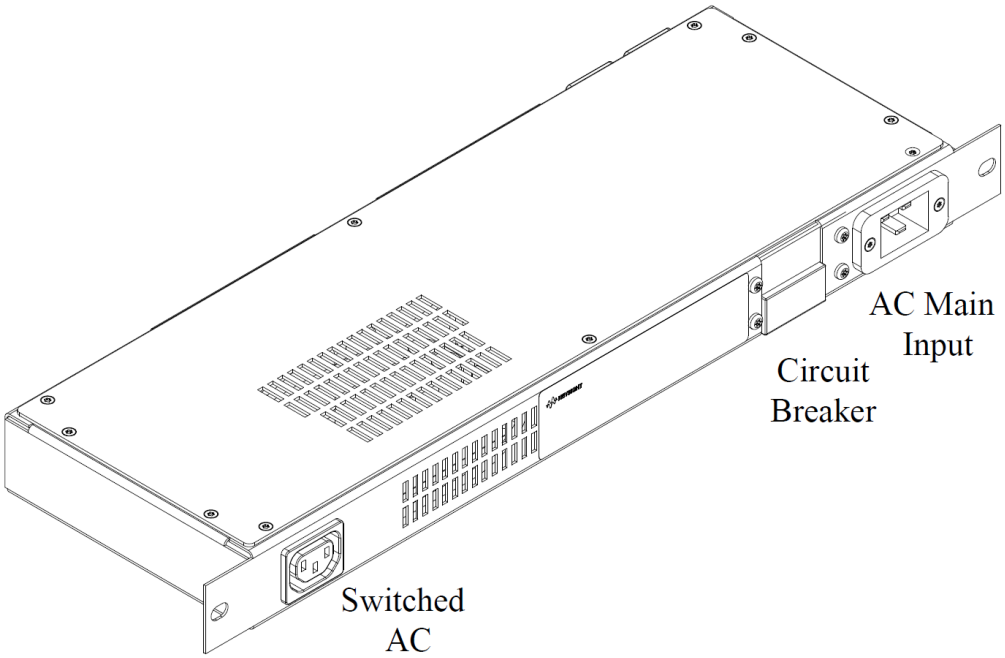

Figure 3-7 E3858B Mains Switch and Input

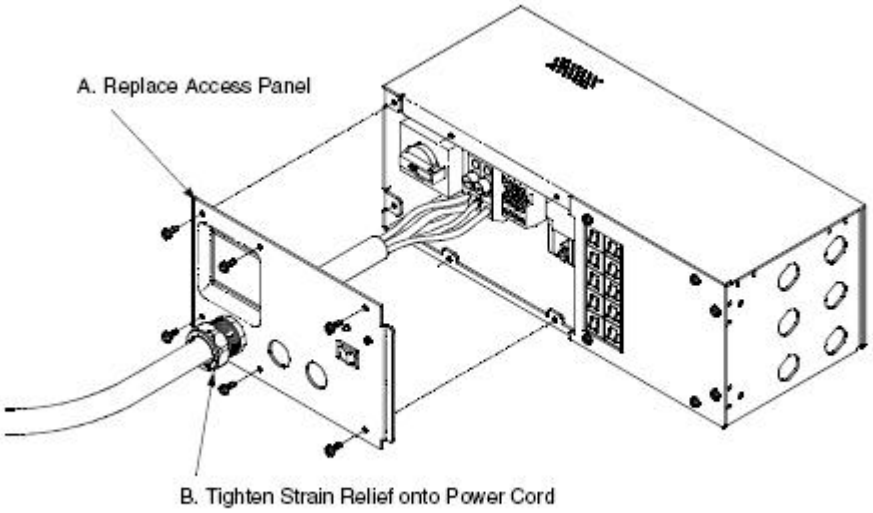

Figure 3-8 E1135C Power Cord Installation

Additional Power Information

- Conventional 50/60-hertz current probes cannot make accurate input current measurements of the system's power supplies due to the harmonics on the currents. A current measuring instrument needs a bandwidth that is above 10 kHz. Improper instruments may yield results that are 50 percent less than actual.
- For the E1135C, system input power connections on the PDU are made to an input connector block and the ground connection to a terminal bolted to the chassis. Power is connected to the mains disconnect switch and a ground terminal attached to the chassis. For ease of installation, in areas where it meets local code requirements, use multi-strand wire from a AC mains to the PDU.

CAUTION For the E1135C, ten thermally-activated circuit breakers designed to protect the output terminal block are located on the front of the PDU. Under normal operation, a detected fault sets the rocker on the breaker to the open position. Reset the rocker by gently pushing it back in place. These breakers must not be opened by force or permanent damage can result. Damage caused by intentionally opening the breaker is not covered by warranty.

- For the E3858B AC mains connection, determine the power plug type and power cord needed. Make the appropriate connections between the IEC320/C19 (see Figure 3-9) power connector and the customer-provided wall outlet connector. Plug the IEC320/C19 connector into the E3858B AC Mains Input shown in Figure 3-10.
- If 2-pin wall outlet connector (without grounding) is used, external ground cable is required with E2230-31600 for grounding purpose.

Figure 3-9 Power Strip's Power Connector

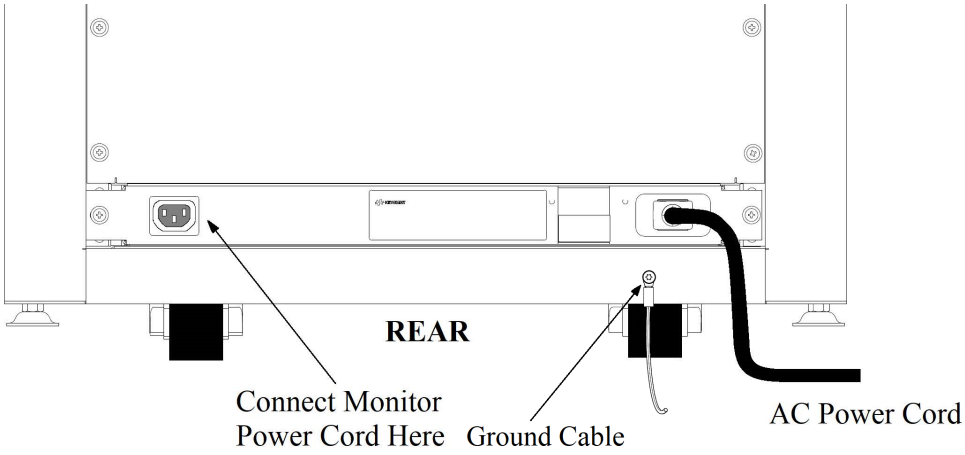

Figure 3-10 Filtered Power Strip/Cord Location

Mains Disconnect Requirements

Although the Keysight PDU (E1135C or E3858B) contains a mains disconnect switch, in some cases, the user may also want to install an external mains disconnect circuit breaker. Be sure the circuit breaker is adjacent to the equipment for easy access. Usual mounting is an approved enclosure on a floor-mounted pedestal.

Disconnect Circuit Breaker Requirements

The disconnect circuit breaker must be:

- Rated for the maximum system amperes,
- Approved for use in building installations in your locality,
- Marked "Mains Disconnect" or the equivalent in your local language,
- Marked for the "Off" position,
- Capable of locking in the "Off" position, but not in the "On" position,
- Open all phases and neutral conductors, but not the safety grounding conductor.

Mains Circuit Breaker Requirements

Requirements for the mains circuit breaker are the same as the “Disconnect Circuit Breaker Requirements” above plus the breaker must be rated a minimum 10,000 amperes interrupting capacity (AIC), for 100-240 V AC circuit, or 14,000 AIC for higher voltage circuit.

Site Configuration for AC Power

The following information is not required, but may save time and effort implementing this configuration when installing the system.

NOTE

The following requires that you:

1. Use a wire and not a conduit for the safety ground conductor.
2. Use the same size wire for all the neutral and ground as is used for the phase conductors.
3. Bond the neutral and the ground wires together at the transformer, and not at the breaker box or anywhere else.

Use the following information to configure your site:

Tap into the main AC power source of the building consisting of 200 to 240 volts AC, 47Hz to 63Hz. Connect the power through a one-to-one or step-down transformer to the correct voltage for the system.

Important recommendations about wiring

- Make certain that the wire used for the neutral is the same size as the hot leads or larger.
- Do not rely on conduit for the ground; always use at least one wire for the ground-the more strands the better.
- Use the same lengths of wire for the phase conductors, the neutral, and the ground.
- It is extremely important that the neutral and ground be connected only at the transformer using an X-O bond.

Safety Ground Connection

As the Keysight TS-5020 & TS-5040 is connected to the AC mains by means of a plug/socket connection, a permanent earth ground must be supplied to reduce the risk of electric shock.

Make a permanent connection from the system rack to protective earth ground. This connection will serve as a redundant Protective Earth Connection to the primary Protective Earth connection, which is part of the AC power cord. The "Earth (ground) terminal" found at the bottom of the system rack, see Figure 3-11, should be connected by a wire separate from the system AC power cord to the Protective Earth connection at the AC source where the system AC power cord is connected. The wire must be the same wire size as the protective conductor of the system AC power cord. The wire may be either a bare conductor or a green with yellow stripe insulated conductor.

The redundant Protective Earth connection wire shall have a correctly sized wire lug on both ends. The wire lugs shall also be sized to fit the "Earth (ground) terminal" stud or bolt as found on the system rack and for the Protective Earth connection at the source end of system AC power cord. In some cases, the Protective Earth connection at the source end of the system AC power cord will receive the conductor without a wire lug.

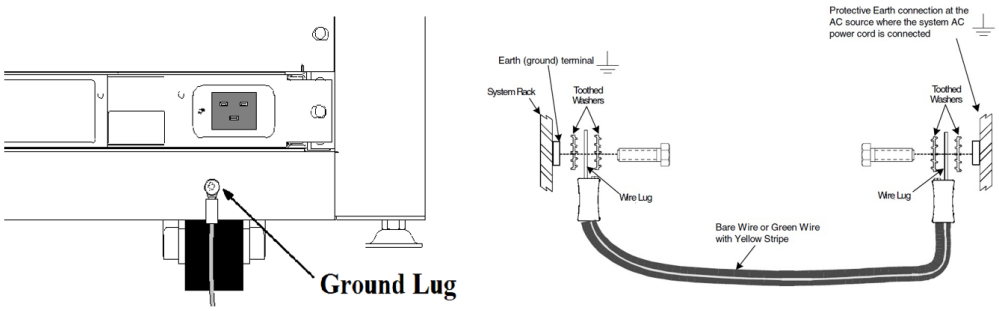

Figure 3-11 Safety Ground Connections

Ventilation

There is one set of 200 cfm extractor fans mounted towards the back at the top of the rack. For TS5040, there is one set of 210 - 315 cfm extractor fans mounted at the rear side of the rack. To maintain proper airflow, keep the area directly above the fans, the back, as well as the intake air louvers on the back clear for a minimum of 1 meter (3.3 feet).

Cleaning Instructions

WARNING To prevent electrical shock, disconnect the TS-5020 system and the TS-5040 system from mains before cleaning. Use a dry cloth or one slightly dampened with water to clean the external case parts. Do not attempt to clean internally.

System Transportation Instructions

The system is shipped from the factory on one pallet with a few smaller boxes.

Ramp Requirements

The cabinet will negotiate ramps with inclines up to 8 degrees before the leveling feet drag on the floor when moved on its casters.

Hallway and Door Width Requirements

Make sure that all doors, elevators, and passageways enroute to the system's final location are large enough to allow passage of the crated system. The crated system requires the use of a floor jack or fork lift to engage the pallet and lift the crated system. Consider this when evaluating hallways, doors and elevators along the route the system must travel.

If the System Cannot be Moved in the Crate

If obstacles or lack of space restrict moving the crated system, remove the system from the pallet in the receiving area and push it on the cabinet casters to the final destination.

The system is equipped with four rack mounted casters for easy movement throughout the facility. Due to weight distribution of instrumentation, the system is most stable during movement when you push from the front with the back of the rack leading. Always push the rack in this front-to-back direction during movement. Avoid side-to-side or back to front movement except for final positioning.

WARNING **Deploying the rack from its shipping carton requires moving it in the Back-to-Front direction. NEVER stand directly in front of the rack when loading or unloading from a shipping carton.**

THIS PAGE HAS BEEN INTENTIONALLY LEFT BLANK.

4 Installing The Keyboard, Mouse, and Printer

KEYSIGHT TECHNOLOGIES

Tools Required

2 Phillips screwdriver

This chapter describes how to install the keyboard shelf, mouse tray and printer tray onto the Test Rack, how to connect the keyboard and mouse, and how to connect an optional strip printer.

NOTE Four captive nuts are installed on the front of the test rack to receive the keyboard shelf screws. These nuts are located immediately below the flat panel display. If you need to locate the shelf elsewhere, four additional captive nuts are included with the shelf kit.

Installation Procedure for TS-5020

Printer Tray

NOTE The following assume a right-hand mouse and left-hand printer arrangement. You can reverse this orientation if necessary.

Attach the printer tray to the keyboard shelf. Make sure that the two hooks engage the shelf and the bottom of the tray is inserted into the tab under the keyboard shelf.

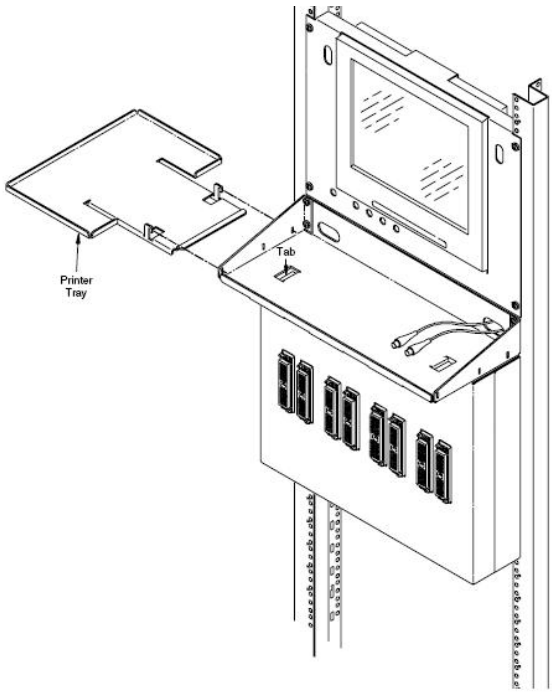

Figure 4-1 Attaching Printer Tray

Mouse Tray

Attach the mouse tray to the keyboard shelf. Make sure that the two hooks engage the shelf and the bottom of the tray is inserted into the tab under the keyboard shelf.

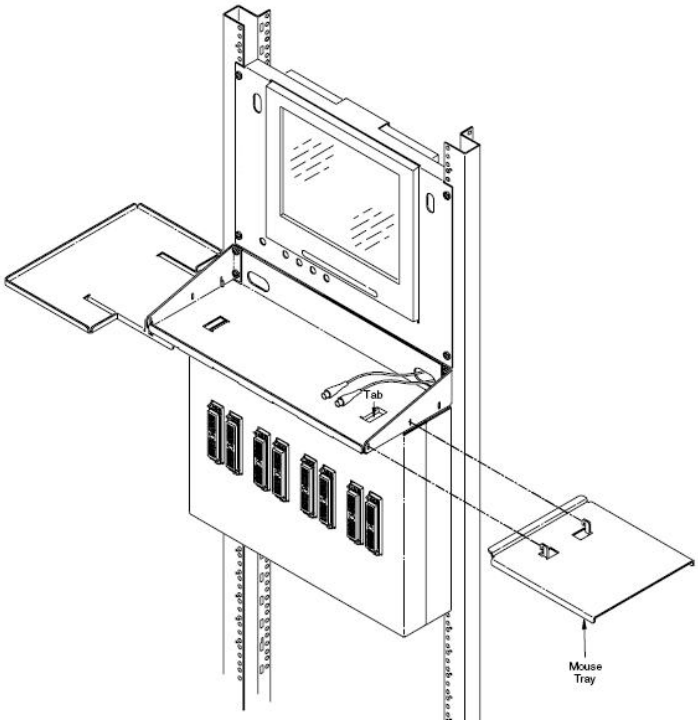

Figure 4-2 Attaching Mouse Tray

Palm Rest

Install the plastic palm rest by slipping it into the sots in the keyboard shelf.

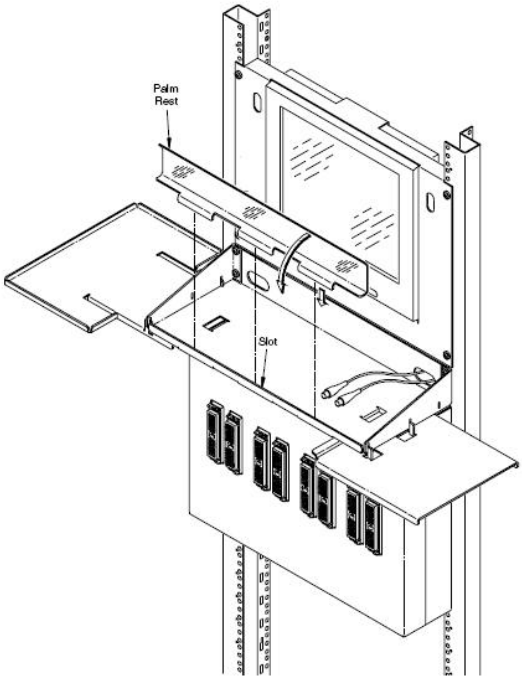

Figure 4-3 Installing Palm Rest

Connect Keyboard and Mouse

Connect the keyboard and mouse connectors to the extension cables (extension cables are labelled “Keyboard” and “Mouse”). Slide the excess cabling into the slot in the keyboard shelf.

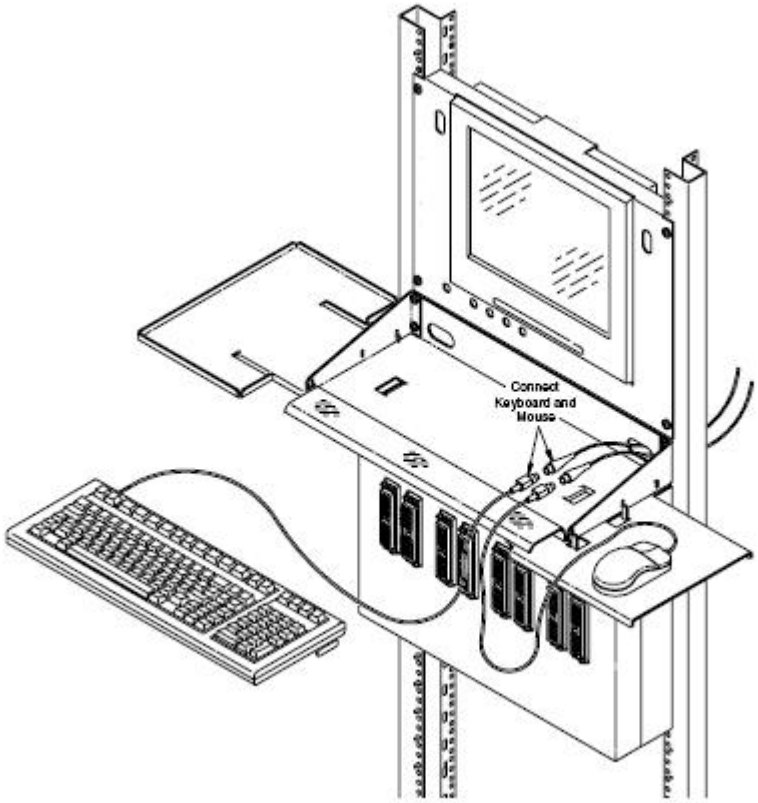

Figure 4-4 Connecting Keyboard and Mouse

If you have an optional Strip Printer (not provided by Keysight Technologies), connect its serial cable to one of the PC serial ports. Power (ac mains) is provided at the PDU. You can route the ac power cable through the holes underneath the Test System Interface to the back of the system rack.

Installation Procedure for TS-5040

Monitor Arm Pole

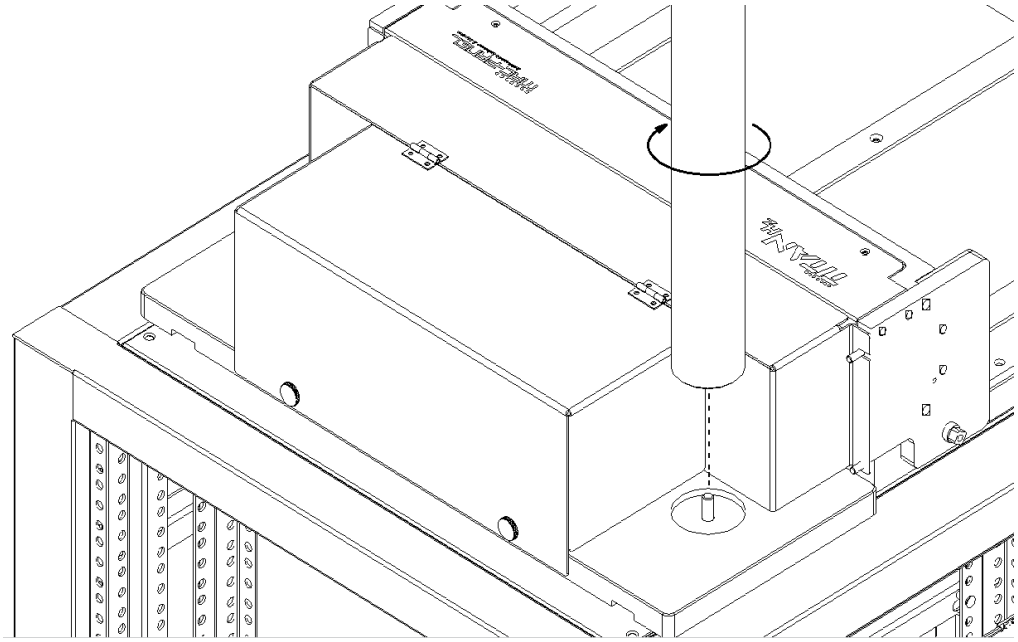

Figure 4-5 Attaching Monitor Arm

Monitor Arm

Install the monitor arm clamp onto the pole and tighten it using the four screws provided. After the clamp is secured, place the monitor arm into the slot as shown below.

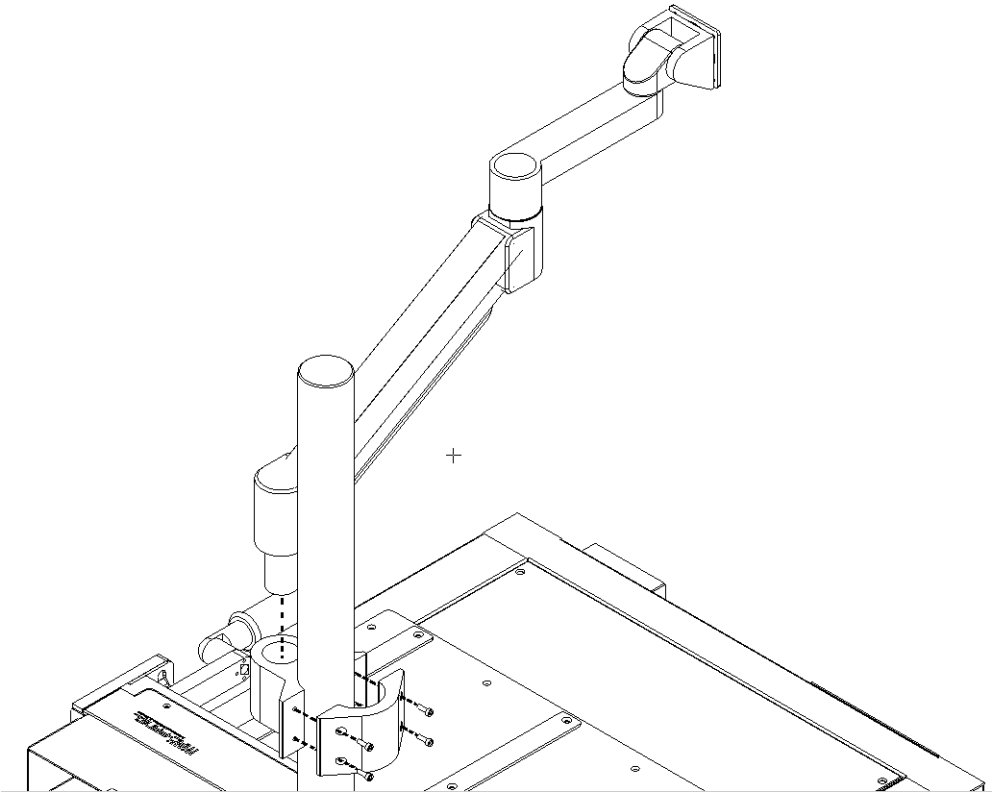

Figure 4-6 Installing Monitor Arm and Clamp

Keyboard Tray

Install the keyboard tray to the monitor arm using the four flat-head screws provided.

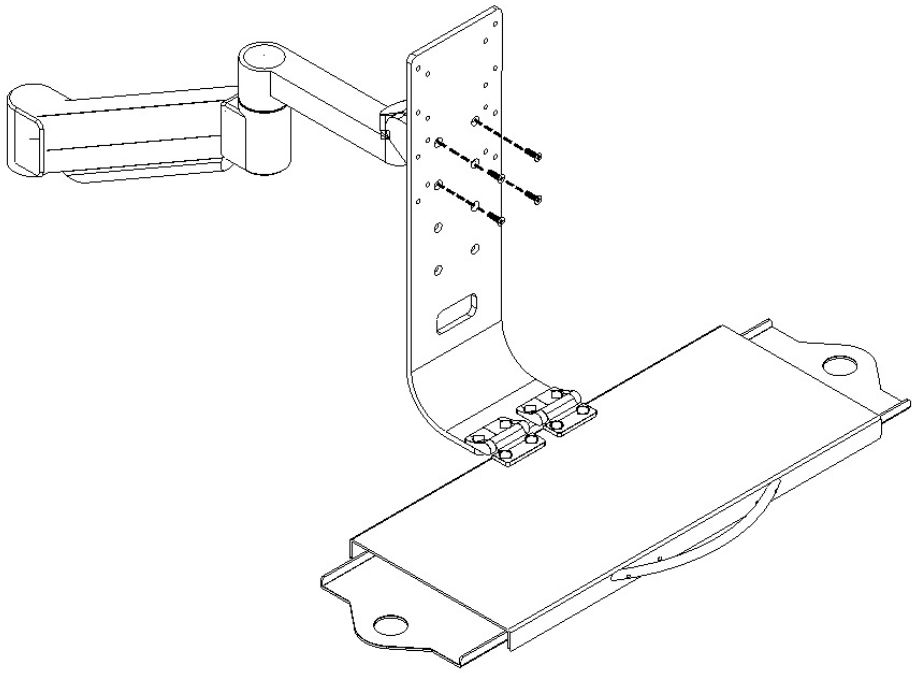

Figure 4-7 Installing Keyboard Tray

Installation Procedure for TS-5040

PC and Peripheral Connections

For your convenience, PC connections have been brought out to the rear of the system on the PC and GPIB Connector Panel (Figure 4-8).

1 Connect the monitor, keyboard, mouse, and any USB.

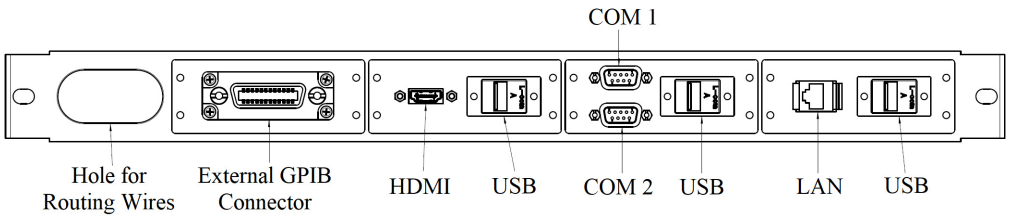

Figure 4-8 PC and GPIB Connector Panel

2 Connect the monitor's power cord to the receptacle on the Filtered Power Strip located at the bottom rear of the rack (Figure 4-9).

NOTE The monitor receptacle is rated for 2 Amp maximum current.

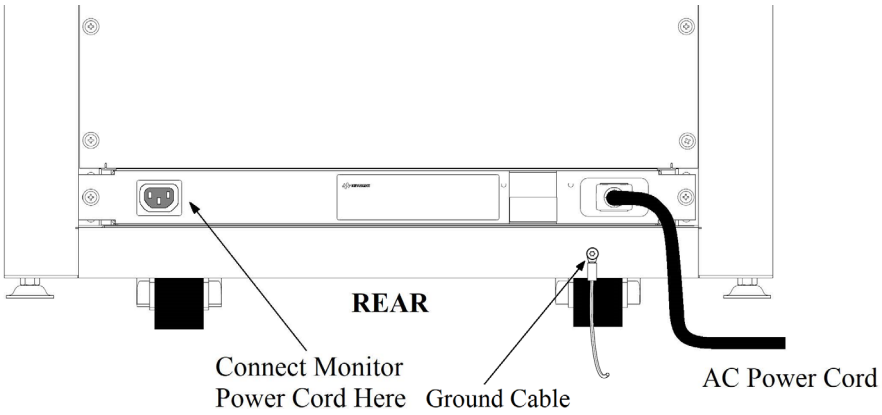

Figure 4-9 Monitor Power Connector

3 After securing all cables, you can apply power to the system by setting the front panel on off switch to ON.

NOTE DO NOT secure the AC power cord to the cable strain relief bracket such that it would prevent the plug from being removed from the power strip in an emergency.

Power Strip Breakers

The Filtered Power Strip contains a 15 A breaker (Figure 4-10). When a breaker opens (trips), switch will be flipped to the right side. Flip the switch to left side to reset it.

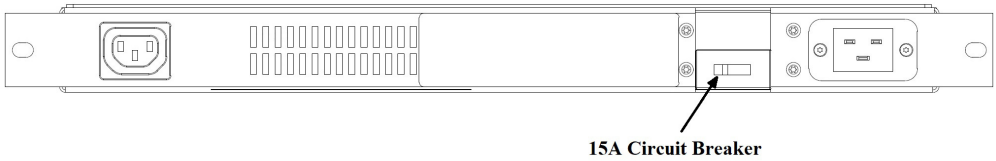

Figure 4-10 Filtered Power Strip Circuit Breakers

THIS PAGE HAS BEEN INTENTIONALLY LEFT BLANK.

Edition 5, October 2023
E2240-90000
www.keysight.com