Keysight 2-Port and 4-Port PNA-X Network Analyzer

N5247A - 10 MHz to 67 GHz

KEYSIGHT

DATA SHEET AND TECHNICAL SPECIFICATIONS

Documentation Warranty

THE MATERIAL CONTAINED IN THIS DOCUMENT IS PROVIDED "AS IS," AND IS SUBJECT TO BEING CHANGED, WITHOUT NOTICE, IN FUTURE EDITIONS. FURTHER, TO THE MAXIMUM EXTENT PERMITTED BY APPLICABLE LAW, KEYSIGHT DISCLAIMS ALL WARRANTIES, EITHER EXPRESS OR IMPLIED WITH REGARD TO THIS MANUAL AND ANY INFORMATION CONTAINED HEREIN, INCLUDING BUT NOT LIMITED TO THE IMPLIED WARRANTIES OF MERCHANTABILITY AND FITNESS FOR A PARTICULAR PURPOSE. KEYSIGHT SHALL NOT BE LIABLE FOR ERRORS OR FOR INCIDENTAL OR CONSEQUENTIAL DAMAGES IN CONNECTION WITH THE FURNISHING, USE, OR PERFORMANCE OF THIS DOCUMENT OR ANY INFORMATION CONTAINED HEREIN. SHOULD KEYSIGHT AND THE USER HAVE A SEPARATE WRITTEN AGREEMENT WITH WARRANTY TERMS COVERING THE MATERIAL IN THIS DOCUMENT THAT CONFLICT WITH THESE TERMS, THE WARRANTY TERMS IN THE SEPARATE AGREEMENT WILL CONTROL.

U.S. Government Rights

U.S. Government Rights. The Software is “commercial computer software,” as defined by Federal Acquisition Regulation (“FAR”) 2.101. Pursuant to FAR 12.212 and 27.405-3 and Department of Defense FAR Supplement (“DFARS”) 227.7202, the U.S. government acquires commercial computer software under the same terms by which the software is customarily provided to the public. Accordingly, Keysight provides the Software to U.S. government customers under its standard commercial license, which is embodied in its End User License Agreement (EULA), a copy of which can be found at http://www.keysight.com/find/sweula. The license set forth in the EULA represents the exclusive authority by which the U.S. government may use, modify, distribute, or disclose the Software. The EULA and the license set forth therein, does not require or permit, among other things, that Keysight: (1) Furnish technical information related to commercial computer software or commercial computer software documentation that is not customarily provided to the public; or (2) Relinquish to, or otherwise provide, the government rights in excess of these rights customarily provided to the public to use, modify, reproduce, release, perform, display, or disclose commercial computer software or commercial computer software documentation. No additional government requirements beyond those set forth in the EULA shall apply, except to the extent that those terms, rights, or licenses are explicitly required from all providers of commercial computer software pursuant to the FAR and the DFARS and are set forth specifically in writing elsewhere in the EULA. Keysight shall be under no obligation to update, revise or otherwise modify the Software. With respect to any technical data as defined by FAR 2.101, pursuant to FAR 12.211 and 27.404.2 and DFARS 227.7102, the U.S. government acquires no greater than Limited Rights as defined in FAR 27.401 or DFAR 227.7103-5 (c), as applicable in any technical data.

Definitions 6

Corrected System Performance 7

System Dynamic Range and Receiver Dynamic Range 7

Table 1. System Dynamic Range, Options 200 or 400, and Receiver Dynamic Range, All Options 8

Table 2a. System Dynamic Range at Test Port (dB), Options 200 or 400 9

Table 2b. System Dynamic Range at Test Port (dB), Options 219 or 419 10

Table 2c. System Dynamic Range at Test Port (dB), Option 224 11

Table 2d. System Dynamic Range at Test Port (dB), Options 224 or 423 12

Table 2e. System Dynamic Range at Test Port (dB), Options 224 or 423 with 029[1] 13

Table 3a. Extended Dynamic Range at Direct Receiver Access Input (dB) - Specification 14

Table 3b. Extended Dynamic Range at Direct Receiver Access Input (dB), Options 224 or 423 15

Table 3c. Extended Dynamic Range at Direct Receiver Access Input (dB), Options 224 or 423 with 029[1] 16

N5247A Corrected System Performance, All Options 17

Table 4. 85058B Calibration Kit 17

Table 5. N4694A 2-Port Electronic Calibration Module 20

Table 6a. Uncorrected System Performance (dB), All Options, All Ports - Specification 23

Table 6b. Uncorrected System Performance (dB), All Options, All Ports - Typical 24

Table 6c. Noise Mode[1] Uncorrected System Performance (dB), Option 029 - Specification 25

Table 6d. Noise Mode[1] Uncorrected System Performance (dB), Option 029 - Typical 25

Test Port Output 26

Table 7. Frequency Information, All Options 26

Table 8a. Maximum Leveled Power (dBm), Options 200 or 400 27

Table 8b. Maximum Leveled Power (dBm), Options 219 or 419 28

Table 8c. Maximum Leveled Power (dBm), Options 224 or 423 29

Table 8d. Maximum Leveled Power (dBm), Options 224 or 423, Combine Mode - Typical 30

Table 8e. Maximum Leveled Power (dBm), Option 224 31

Table 8f. Maximum Leveled Power (dBm), Options 224 or 423 with 029[1] 32

Table 8g. Maximum Leveled Power (dBm), Options 224 or 423 with 029[1], Combine Mode - Typical 33

Table 8h. Maximum Leveled Power (dBm), Noise Mode[1], Options 224 or 423 with 029 - Typical 34

Table 9. Power Level Accuracy (dB) at Nominal Power[1], All Options 35

Table 10a. Power Level Linearity[1] (dB), All Options - Specification 35

Table 10b. Power Level Linearity[1] (dB), All Options - Specification 36

Table 10c. Power Level Linearity[1] (dB), Option 224 - Specification 36

Table 11a. Power Sweep Range (dB), Options 200 or 400 37
Table 11b. Power Sweep Range (dB), Options 219 or 419 38
Table 11c. Power Sweep Range (dB), Options 224 or 423 39
Table 11d. Power Sweep Range (dB), Option 224 40
Table 11e. Power Sweep Range (dB), Options 224 or 423 with 029[1] 41
Table 12. N5247A Nominal Power (Preset Power, dBm) 42
Table 13. Power Resolution and Maximum/Minimum Settable Power, All Ports[1] 42
Table 14. 2nd and 3rd Harmonics at Max Specified Power (dBc), All Options - Typical 42
Table 15. Non-Harmonic Spurs at Nominal Power (dBc), All Options, All Ports - Typical 43
Table 16. Phase Noise (dBc/Hz), All Options, All Ports - Typical 43

Test Port Input 44
Table 17. Noise Floor[1] (dBm) @ 10 Hz IFBW, All Ports, All Options 44
Table 18. Test Port Compression at 0.1 dB (dBm), All Options, All Ports - Typical 44
Table 19. Receiver Compression Test Port Power[1] (dBm), All Ports - Specification 45
Table 20a. Trace Noise[1] Magnitude (dB rms) 45
Table 20b. Trace Noise[1] Phase (deg rms) 46
Table 21. Reference Level - Specification 46
Table 22. Stability[1] - Typical 46
Table 23. Damage Input Level - Specification 47

Noise Receiver Input (Option 029 only) 48
Table 24. Noise Receiver Bandwidth 48
Table 25. Receiver Noise Figure (dB), Port 2, @ 4 MHz BW, High Gain Setting 48
Table 26. Noise Figure Trace Noise[1] (dB rms) @ 4 MHz BW, All Gain Settings 48
Table 27. Noise Receiver Linearity (dB) @ 4 MHz BW - Specification 48
Table 28. Noise Receiver Input Range - Specification 49

Dynamic Accuracy 50
Table 29. Dynamic Accuracy - Specification 50
Table 30. Test Port Input (Group Delay)[1] 55

General Information 56
Table 31. Miscellaneous Information 56
Table 32. Front Panel Information, All Options 56
Table 33. Rear Panel Information, All Options 57
Table 34. Analyzer Dimensions and Weight 61
Operating Environment 61

Measurement Throughput Summary 62
Table 35a. Cycle Time (ms) for Measurement Completion, All Options - Typical 62

Table 35b. Typical Cycle Time (ms) for Full-Span Measurement Completion - Typical..... 63
Table 36. Cycle Time vs. IF Bandwidth - Typical 63
Table 37. Cycle Time (ms) vs. Number of Points - Typical 64
Table 38. Data Transfer Time[1] (ms) - Typical..... 65

Specifications: Front-Panel Jumpers 66
Table 39. Measurement Receiver Inputs (dBm) - Typical 66
Table 40a. Reference Receiver Inputs and Reference Source Outputs (dBm) - Typical 67
Table 40b. Reference Receiver Inputs and Reference Source Outputs (dBm) - Typical 68
Table 40c. Reference Receiver Inputs and Reference Source Outputs (dBm) - Typical 69
Table 41a. Source Outputs (dBm) - Typical..... 70
Table 41b. Source Outputs (dBm) - Typical 71
Table 42. Coupler Inputs (dB) - Typical 72
Table 43. Damage Level - Typical..... 73

Test Set Block Diagrams 74
Figure 1. 2-Port N5247A Base Unit Option 200 74
Figure 2. 2-Port N5247A Option 219..... 75
Figure 3. 2-Port N5247A Option 224..... 75
Figure 4. 2-Port N5247A Option 224 with 029..... 76
Figure 5. 4-Port N5247A Base Unit Option 400 77
Figure 6. 4-Port N5247A Option 419..... 77
Figure 7. 4-Port N5247A Option 423..... 78
Figure 8. 4-Port N5247A Option 423 with 029..... 78
Figure 9. Receiver Block Diagram..... 79

This is a complete list of the technical specifications for the N5247A PNA-X network analyzer with the following options:

Option 029, adds hardware and firmware for high-accuracy noise figure measurements. It requires one of Option 224 or 423. See the block diagram.

Option 200, 2-port standard test set (includes six front-panel access loops) and power range. See the block diagram.

Option 219, adds 2-port extended power range, source and receiver attenuators, and bias-tees (requires Option 200). See the block diagram.

Option 224, adds an internal second source, a combiner, and mechanical switches to the 2-port analyzer (requires Option 200, 219, and 080). See the block diagram.

Option 400, 4-port standard test set (includes twelve front-panel access loops), power range, and an internal second source (Option 080 recommended). See the block diagram.

Option 419, adds 4-port extended power range, source and receiver attenuators, and bias-tees (requires Option 400). See the block diagram.

Option 423, adds an internal combiner, and mechanical switches to the 4-port analyzer (requires Option 400, 419, and 080). See the block diagram.

Notes

This document provides technical specifications for the 85058B calibration kit, and the N4694A 2-Port ECal module. Please download our free Uncertainty Calculator from http://www.keysight.com/find/na_calculator to generate the curves for your calibration kit and PNA setup. Typical performance information between 67 GHz and 70 GHz is shown in this document where available. The performance is degraded at particular frequencies in this range due to the modes of the 1.85 mm connectors used in the analyzer, test port cables and adapters.

For all tables in this data sheet, the specified performance at the exact frequency of a break is the degraded value of the two specifications at that frequency.

Definitions

All specifications and characteristics apply over a 25 °C ±5 °C range (unless otherwise stated) and 90 minutes after the instrument has been turned on.

Specification (spec.): Warranted performance. Specifications include guardbands to account for the expected statistical performance distribution, measurement uncertainties, and changes in performance due to environmental conditions.

Characteristic (char.): A performance parameter that the product is expected to meet before it leaves the factory, but that is not verified in the field and is not covered by the product warranty. A characteristic includes the same guardbands as a specification.

Typical (typ.): Expected performance of an average unit which does not include guardbands. It is not covered by the product warranty.

Nominal (nom.): A general, descriptive term that does not imply a level of performance. It is not covered by the product warranty.

Calibration: The process of measuring known standards to characterize a network analyzer's systematic (repeatable) errors.

Corrected (residual): Indicates performance after error correction (calibration). It is determined by the quality of calibration standards and how well "known" they are, plus system repeatability, stability, and noise.

Uncorrected (raw): Indicates instrument performance without error correction. The uncorrected performance affects the stability of a calibration.

Standard: When referring to the analyzer, this includes no options unless noted otherwise.

Corrected System Performance

The specifications in this section apply for measurements made with the N5247A analyzer with the following conditions:

- 10 Hz IF bandwidth
- No averaging applied to data
- Isolation calibration with an averaging factor of 8
- Source in filtered mode where applicable

System Dynamic Range and Receiver Dynamic Range

- System Dynamic Range is defined as the maximum leveled output power (spec) minus the noise floor (spec).
- Extended Dynamic Range at Direct Access Input is defined as the maximum leveled output power (spec) minus the direct receiver access input noise floor (spec).
- Receiver Dynamic Range is defined as the test port compression at 0.1 dB (typical) minus the noise floor (typical).

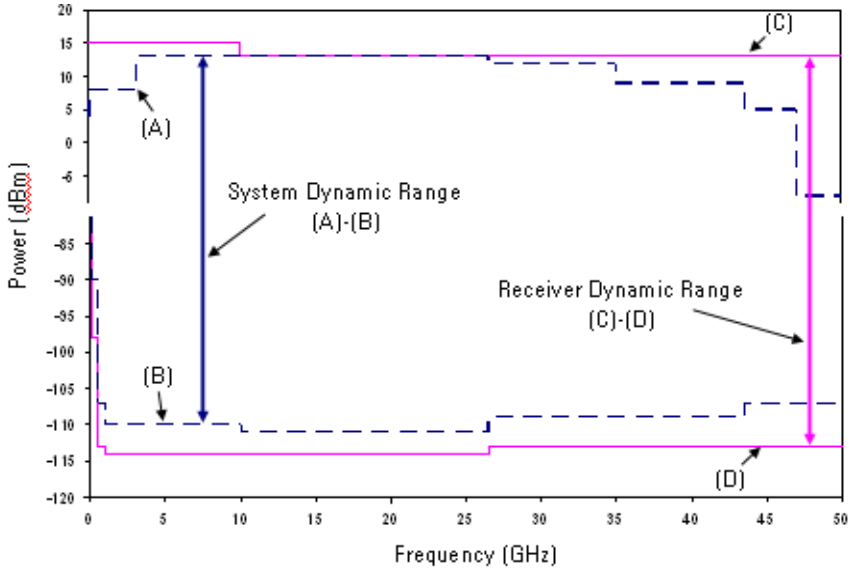

NOTE The effective dynamic range must take measurement uncertainties and interfering signals into account.

The direct receiver access input extended dynamic range is calculated as the difference between the direct receiver access input noise floor and the source maximum output power. The effective dynamic range must take measurement uncertainties and interfering signals into account. This set-up should only be used when the receiver input will never exceed its maximum receiver input. When the analyzer is in segment sweep mode, it can have predefined frequency segments which will output a higher power level when the extended dynamic range is required (i.e. devices with high insertion loss), and reduced power when the maximum receiver input level will occur (i.e. devices with low insertion loss). The extended range is only available in one-path transmission measurements.

It may typically be degraded at particular frequencies below 500 MHz due to spurious receiver residuals.

Table 1. System Dynamic Range, Options 200 or 400, and Receiver Dynamic Range, All Options

Description	Specification, Options 200, 400			Typical, All Options		
	System Dynamic Range (dB) (A)-(B)	Max Leveled Output Power (dBm) (A)	Test Port Noise Floor (dBm) (B)	Receiver Dynamic Range (dB) (C)-(D)	Test Port Compression at 0.1 dB (dBm) (C)	Test Port Noise Floor (dBm) (D)
	Ports 1,3[1]	Ports 1,3[1]	All Ports	All Ports	All Ports	All Ports
10 MHz to 50 MHz	74	4	-70	91	15	-76
50 MHz to 100 MHz	100	8	-92	113	15	-98
100 MHz to 500 MHz	108	8	-100	122	15	-107
500 MHz to 1 GHz	118	8	-110	131	15	-116
1 GHz to 2 GHz	123	8	-115	134	15	-119
2 GHz to 3.2 GHz	125	10	-115	134	15	-119
3.2 GHz to 10 GHz	128	13	-115	134	15	-119
10 GHz to 13.5 GHz	127	11	-116	133	12	-121
13.5 GHz to 16 GHz	129	12	-117	133	12	-121
16 GHz to 19 GHz	128	10	-118	134	12	-122
19 GHz to 24 GHz	129	11	-118	134	12	-122
24 GHz to 26.5 GHz	129	11	-118	134	12	-122
26.5 GHz to 30 GHz	116	10	-106	122	12	-110
30 GHz to 32 GHz	113	7	-106	121	11	-110
32 GHz to 35 GHz	115	9	-106	121	11	-110
35 GHz to 40 GHz	110	5	-105	121	11	-110
40 GHz to 50 GHz	112	10	-102	119	11	-108
50 GHz to 60 GHz	111	10	-101	118	11	-107
60 GHz to 64 GHz	110	10	-100	118	11	-107
64 GHz to 67 GHz	110	10	-100	118	11	-107
67 GHz to 70 GHz	--	--	--	106	11	-95

[1] Either port can be used as the source port. Any other port can be used as the receiver port.

Table 2a. System Dynamic Range at Test Port (dB), Options 200 or 400

Description	Specification[2]		Typical	
	Ports 1, 3[1]	Ports 2, 4[1]	Ports 1, 3[1]	Ports 2, 4[1]
10 MHz to 50 MHz	74	82	88	93
50 MHz to 100 MHz	100	105	111	118
100 MHz to 500 MHz	108	113	120	127
500 MHz to 1 GHz	118	123	130	136
1 GHz to 2 GHz	123	128	131	139
2 GHz to 3.2 GHz	125	128	134	136
3.2 GHz to 10 GHz	128	128	137	137
10 GHz to 13.5 GHz	127	127	137	136
13.5 GHz to 16 GHz	129	129	137	137
16 GHz to 19 GHz	128	128	137	137
19 GHz to 24 GHz	129	129	137	137
24 GHz to 26.5 GHz	129	129	136	136
26.5 GHz to 30 GHz	116	116	124	124
30 GHz to 32 GHz	113	113	122	122
32 GHz to 35 GHz	115	115	123	123
35 GHz to 40 GHz	110	110	119	119
40 GHz to 50 GHz	112	112	121	121
50 GHz to 60 GHz	111	111	120	120
60 GHz to 64 GHz	110	110	120	120
64 GHz to 67 GHz	110	110	120	120
67 GHz to 70 GHz	--	--	107	107

[1] Either port can be used as the source port. Any other port can be used as the receiver port.

[2] Specification applies to new instruments. Test limit during recertification is defined by Maximum Leveled Power - Noise Floor.

Table 2b. System Dynamic Range at Test Port (dB), Options 219 or 419

Description	Specification[2]		Typical	
	Ports 1, 3[1]	Ports 2, 4[1]	Ports 1, 3[1]	Ports 2, 4[1]
10 MHz to 50 MHz	74	81	88	93
50 MHz to 100 MHz	100	105	111	118
100 MHz to 500 MHz	108	113	120	127
500 MHz to 1 GHz	118	123	130	136
1 GHz to 2 GHz	123	128	131	139
2 GHz to 3.2 GHz	124	128	134	136
3.2 GHz to 10 GHz	126	127	137	137
10 GHz to 13.5 GHz	125	125	136	136
13.5 GHz to 16 GHz	127	127	136	136
16 GHz to 19 GHz	126	126	135	135
19 GHz to 24 GHz	126	126	134	134
24 GHz to 26.5 GHz	125	125	134	134
26.5 GHz to 30 GHz	113	113	122	122
30 GHz to 32 GHz	111	111	120	120
32 GHz to 35 GHz	112	112	121	121
35 GHz to 40 GHz	106	106	118	118
40 GHz to 50 GHz	108	108	118	118
50 GHz to 60 GHz	106	106	117	117
60 GHz to 64 GHz	104	104	117	117
64 GHz to 67 GHz	104	104	116	116
67 GHz to 70 GHz	--	--	101	101

[1] Either port can be used as the source port. Any other port can be used as the receiver port.

[2] Specification applies to new instruments. Test limit during recertification is defined by Maximum Leveled Power - Noise Floor.

Table 2c. System Dynamic Range at Test Port (dB), Option 224

Description	Specification[1]		Typical	
	Source 2 Out 1	Source 2 Out 2	Source 2 Out 1	Source 2 Out 2
10 MHz to 50 MHz	74	83	86	93
50 MHz to 100 MHz	100	107	110	119
100 MHz to 500 MHz	108	115	119	128
500 MHz to 1 GHz	118	125	130	137
1 GHz to 2 GHz	123	130	133	140
2 GHz to 3.2 GHz	125	130	133	137
3.2 GHz to 10 GHz	129	131	138	139
10 GHz to 13.5 GHz	128	128	138	140
13.5 GHz to 16 GHz	130	130	138	139
16 GHz to 19 GHz	129	130	139	139
19 GHz to 24 GHz	129	130	139	139
24 GHz to 26.5 GHz	129	130	138	138
26.5 GHz to 30 GHz	117	118	126	126
30 GHz to 32 GHz	115	116	124	124
32 GHz to 35 GHz	117	117	125	125
35 GHz to 40 GHz	111	111	123	123
40 GHz to 50 GHz	113	113	124	125
50 GHz to 60 GHz	113	115	124	125
60 GHz to 64 GHz	112	114	124	126
64 GHz to 67 GHz	112	114	124	126

[1] Specification applies to new instruments. Test limit during recertification is defined by Maximum Leveled Power - Noise Floor.

Table 2d. System Dynamic Range at Test Port (dB), Options 224 or 423

Description	Specification[2]		Typical			
	Ports 1, 3[1]	Ports 2, 4[1]	Ports 1, 3[1]	Ports 2, 4[1]	Source1 Port 1 Combine Mode	Source 2 Port 1 Combine Mode
10 MHz to 50 MHz	74	80	87	93	81	81
50 MHz to 100 MHz	99	105	110	117	104	104
100 MHz to 500 MHz	107	113	120	126	113	113
500 MHz to 1 GHz	117	123	129	135	123	123
1 GHz to 2 GHz	122	128	131	138	125	125
2 GHz to 3.2 GHz	124	128	133	135	127	127
3.2 GHz to 10 GHz	126	127	136	136	128	128
10 GHz to 13.5 GHz	124	124	135	135	127	127
13.5 GHz to 16 GHz	126	126	135	135	127	127
16 GHz to 19 GHz	125	125	134	134	126	126
19 GHz to 24 GHz	125	125	133	133	124	124
24 GHz to 26.5 GHz	124	124	133	133	124	124
26.5 GHz to 30 GHz	112	112	121	121	112	112
30 GHz to 32 GHz	110	110	119	119	109	109
32 GHz to 35 GHz	111	111	120	120	110	110
35 GHz to 40 GHz	105	105	117	117	107	107
40 GHz to 50 GHz	107	107	118	118	108	108
50 GHz to 60 GHz	105	105	116	116	105	105
60 GHz to 64 GHz	102	102	116	116	104	104
64 GHz to 67 GHz	102	102	115	115	103	103

[1] Either port can be used as the source port. Any other port can be used as the receiver port.

[2] Specification applies to new instruments. Test limit during recertification is defined by Maximum Leveled Power - Noise Floor.

Table 2e. System Dynamic Range at Test Port (dB), Options 224 or 423 with 029[1]

Description	Specification[2]		Typical			
	Port 1	Port 2	Port 1	Port 2	Source1 Port 1 Combine Mode	Source 2 Port 1 Combine Mode
10 MHz to 50 MHz	74	80	87	93	81	81
50 MHz to 100 MHz	99	105	110	117	104	104
100 MHz to 500 MHz	107	113	120	126	113	113
500 MHz to 1 GHz	117	123	129	135	123	123
1 GHz to 2 GHz	122	128	131	138	125	125
2 GHz to 3.2 GHz	124	128	133	135	127	127
3.2 GHz to 10 GHz	124	125	135	135	127	127
10 GHz to 13.5 GHz	122	122	134	134	126	126
13.5 GHz to 16 GHz	123	123	135	135	127	127
16 GHz to 19 GHz	122	122	134	134	126	126
19 GHz to 24 GHz	122	122	133	133	124	124
24 GHz to 26.5 GHz	122	122	132	132	123	123
26.5 GHz to 30 GHz	110	110	120	120	111	111
30 GHz to 32 GHz	108	108	118	118	108	108
32 GHz to 35 GHz	109	109	119	119	109	109
35 GHz to 40 GHz	103	103	116	116	106	106
40 GHz to 50 GHz	106	106	116	116	106	106
50 GHz to 60 GHz	104	104	114	114	103	103
60 GHz to 64 GHz	101	101	113	113	101	101
64 GHz to 67 GHz	101	101	113	113	101	101

[1] Option 029 affects system dynamic range with port 1 or port 2 as the source port. Refer to Table 2c and 2d for the system dynamic range with port 3 or port 4 as the source port. Port 1 impedance tuner switch is in bypass position and port 2 noise receiver switch is in normal position.

[2] Specification applies to new instruments. Test limit during recertification is defined by Maximum Leveled Power - Noise Floor.

Table 3a. Extended Dynamic Range at Direct Receiver Access Input (dB) - Specification

Description	Options 200, 400		Options 219, 419	
	Ports 1, 3[1]	Ports 2, 4[1]	Ports 1, 3[1]	Ports 2, 4[1]
10 MHz to 50 MHz	104	112	104	111
50 MHz to 100 MHz	113	118	113	118
100 MHz to 500 MHz	121	126	121	126
500 MHz to 1 GHz	131	136	131	136
1 GHz to 2 GHz	135	140	135	140
2 GHz to 3.2 GHz	137	140	136	140
3.2 GHz to 10 GHz	140	140	138	139
10 GHz to 13.5 GHz	139	139	137	137
13.5 GHz to 16 GHz	141	141	139	139
16 GHz to 19 GHz	139	139	137	137
19 GHz to 24 GHz	140	140	137	137
24 GHz to 26.5 GHz	140	140	136	136
26.5 GHz to 30 GHz	127	127	124	124
30 GHz to 32 GHz	124	124	122	122
32 GHz to 35 GHz	126	126	123	123
35 GHz to 40 GHz	121	121	117	117
40 GHz to 50 GHz	122	122	118	118
50 GHz to 60 GHz	120	120	115	115
60 GHz to 64 GHz	118	118	112	112
64 GHz to 67 GHz	118	118	112	112

[1] Either port can be used as the source port. Any other port can be used as the receiver port.

Table 3b. Extended Dynamic Range at Direct Receiver Access Input (dB), Options 224 or 423

Description	Specification				Typical	
	Option 224		Options 224, 423		Options 224, 423	
	Source 2 Out 1	Source 2 Out 2	Ports 1, 3[1]	Ports 2, 4[1]	Source 1 Port 1 Combine Mode	Source 2 Port 1 Combine Mode
10 MHz to 50 MHz	104	113	104	110	111	111
50 MHz to 100 MHz	113	120	112	118	117	117
100 MHz to 500 MHz	121	128	120	126	126	126
500 MHz to 1 GHz	131	138	130	136	136	136
1 GHz to 2 GHz	135	142	134	140	137	137
2 GHz to 3.2 GHz	137	142	136	140	139	139
3.2 GHz to 10 GHz	141	143	138	139	140	140
10 GHz to 13.5 GHz	140	140	136	136	139	139
13.5 GHz to 16 GHz	142	142	138	138	139	139
16 GHz to 19 GHz	140	140	136	136	137	137
19 GHz to 24 GHz	140	140	136	136	135	135
24 GHz to 26.5 GHz	140	140	135	135	135	135
26.5 GHz to 30 GHz	128	128	123	123	123	123
30 GHz to 32 GHz	126	126	121	121	120	120
32 GHz to 35 GHz	128	128	122	122	121	121
35 GHz to 40 GHz	122	122	116	116	118	118
40 GHz to 50 GHz	123	123	117	117	118	118
50 GHz to 60 GHz	122	122	114	114	114	114
60 GHz to 64 GHz	120	120	110	110	112	112
64 GHz to 67 GHz	120	120	110	110	111	111

[1] Either port can be used as the source port. Any other port can be used as the receiver port.

Table 3c. Extended Dynamic Range at Direct Receiver Access Input (dB), Options 224 or 423 with 029[1]

Description	Specification		Typical	
	Port 1	Port 2	Source 1 Port 1 Combine Mode	Source 2 Port 1 Combine Mode
10 MHz to 50 MHz	104	110	111	111
50 MHz to 100 MHz	112	118	117	117
100 MHz to 500 MHz	120	126	126	126
500 MHz to 1 GHz	130	136	136	136
1 GHz to 2 GHz	134	140	137	137
2 GHz to 3.2 GHz	136	140	139	139
3.2 GHz to 10 GHz	136	137	139	139
10 GHz to 13.5 GHz	134	134	138	138
13.5 GHz to 16 GHz	135	135	139	139
16 GHz to 19 GHz	133	133	137	137
19 GHz to 24 GHz	133	133	134	134
24 GHz to 26.5 GHz	133	133	134	134
26.5 GHz to 30 GHz	121	121	122	122
30 GHz to 32 GHz	119	119	119	119
32 GHz to 35 GHz	120	120	120	120
35 GHz to 40 GHz	114	114	117	117
40 GHz to 50 GHz	116	116	116	116
50 GHz to 60 GHz	113	113	112	112
60 GHz to 64 GHz	109	109	109	109
64 GHz to 67 GHz	109	109	109	109

[1] Option 029 affects system dynamic range with port 1 or port 2 as the source port. Refer to Table 3b for the extended dynamic range with port 3 or port 4 as the source port. Port 1 impedance tuner switch is in bypass position and port 2 noise receiver switch is in normal position.

N5247A Corrected System Performance, All Options

For any Sii reflection measurement:

- Sjj = 0.

For any Sij transmission measurement:

- Sji = Sij when Sij ≤ 1
- Sji = 1/Sij when Sij > 1
- Skk = 0 for all k

Applies to the N5247A Option 200 or 219 or 224 or 400 or 419 or 423 analyzers, 85058B (1.85 mm) calibration kit, N4697F flexible test port cable set, and a full 2-port calibration. Also applies to the following condition: Environmental temperature 23° ±3 °C, with < 1 °C deviation from calibration temperature

The uncertainty charts were generated for Option 423, although they are applicable for any option without Option 029. Please download our free Uncertainty Calculator from http://www.keysight.com/find/na_calculator to generate the curves for your calibration kit and PNA setup.

Table 4. 85058B Calibration Kit

Description	Specification (dB)							
	10 MHz to 45 MHz	45 MHz to 2 GHz	2 GHz to 10 GHz	10 GHz to 20 GHz	20 GHz to 35 GHz	35 GHz to 50 GHz	50 GHz to 60 GHz	60 GHz to 67 GHz
Directivity	35	35	41	38	37	37	34	34
Source Match	34	34	44	40	41	42	40	40
Load Match	35	35	41	37	36	36	33	33
Reflection Tracking[1]								
Mag	±0.019	±0.019	±0.010	±0.033	±0.033	±0.020	±0.030	±0.030
Phase (°)	±0.125	±0.125	±0.066	±0.218	±0.218	±0.132	±0.198	±0.198
Transmission Tracking without Option 029								
Mag	±0.149	±0.128	±0.061	±0.094	±0.100	±0.093	±0.121	±0.137
Phase (°)	±0.983	±0.845	±0.402	±0.619	±0.663	±0.616	±0.801	±0.903
S_{21} Transmission Tracking with Option 029[1]								
Mag	±0.170	±0.128	±0.064	±0.099	±0.100	±0.093	±0.127	±0.137
Phase (°)	±1.119	±0.845	±0.423	±0.655	±0.663	±0.616	±0.837	±0.903
S_{12} Transmission Tracking with Option 029[1]								
Mag	±0.170	±0.128	±0.064	±0.099	±0.100	±0.093	±0.127	±0.137
Phase (°)	±1.119	±0.845	±0.423	±0.655	±0.663	±0.616	±0.837	±0.903

[1] The port 1 noise tuner switch set to the bypass position, and port 2 noise receiver switch set to the normal position.

Transmission Uncertainty

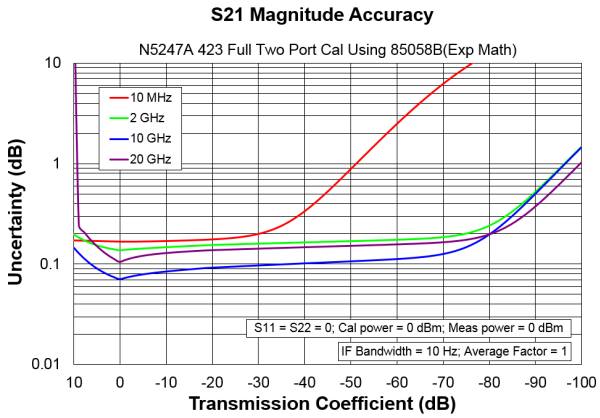

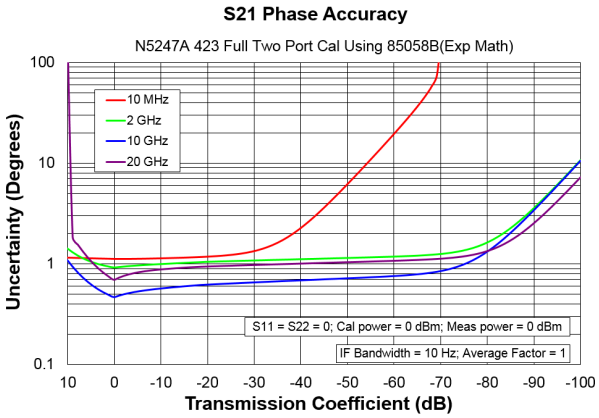

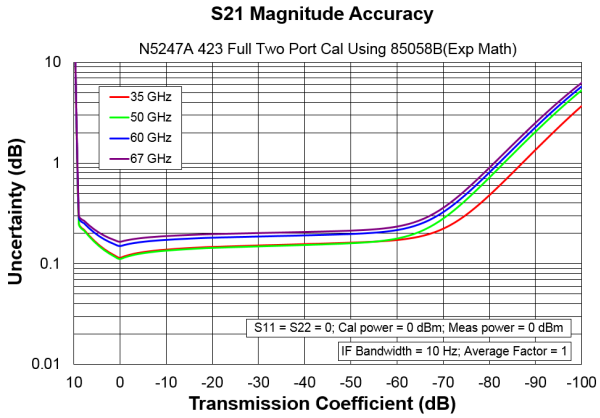

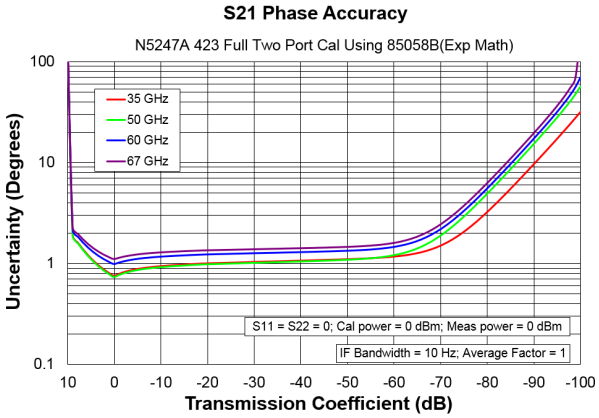

Reflection Uncertainty

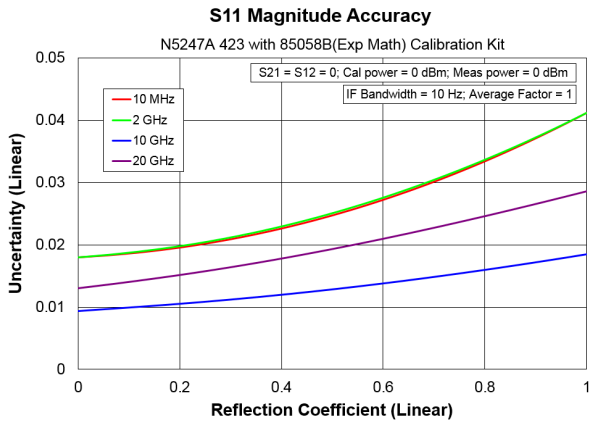

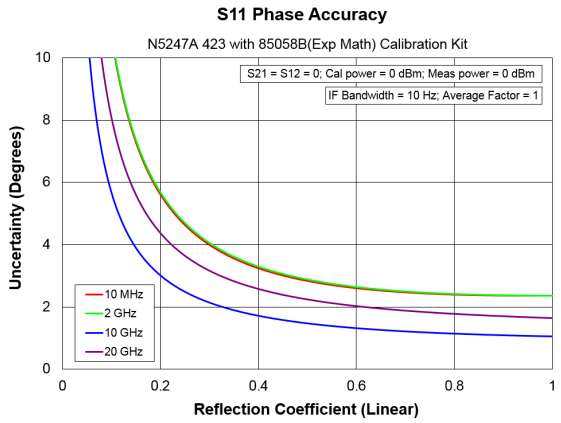

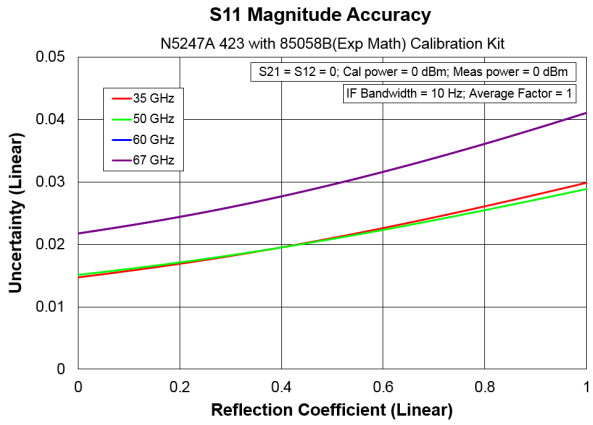

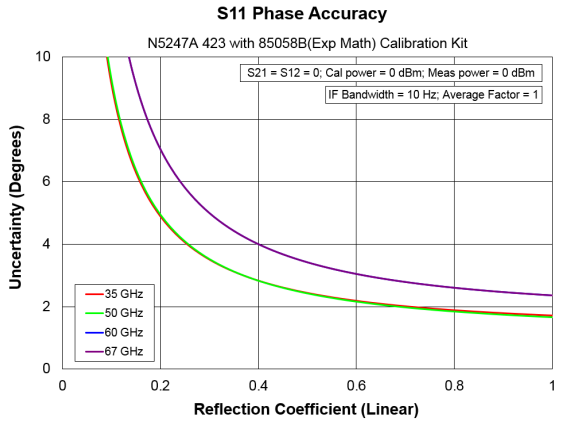

Table 5. N4694A 2-Port Electronic Calibration Module

Description	Specification (dB)							
	10 MHz to 45 MHz	45 MHz to 2 GHz	2 GHz to 10 GHz	10 GHz to 20 GHz	20 GHz to 35 GHz	35 GHz to 50 GHz	50 GHz to 60 GHz	60 GHz to 67 GHz
Directivity	33	41	47	47	44	42	41	38
Source Match	25	38	39	39	34	33	30	27
Load Match	25	37	38	38	33	32	29	26
Reflection Tracking[1]								
Mag	±0.050	±0.040	±0.040	±0.040	±0.060	±0.070	±0.080	±0.090
Phase (°)	±0.330	±0.264	±0.264	±0.264	±0.396	±0.462	±0.528	±0.594
Transmission Tracking without Option 029								
Mag	±0.136	±0.074	±0.057	±0.057	±0.087	±0.104	±0.114	±0.144
Phase (°)	±0.897	±0.491	±0.378	±0.378	±0.576	±0.688	±0.754	±0.951
S_{21} Transmission Tracking with Option 029[1]								
Mag	±0.186	±0.094	±0.057	±0.059	±0.087	±0.104	±0.114	±0.144
Phase (°)	±1.226	±0.623	±0.378	±0.392	±0.576	±0.688	±0.754	±0.951
S_{12} Transmission Tracking with Option 029[1]								
Mag	±0.186	±0.094	±0.057	±0.059	±0.087	±0.104	±0.114	±0.144
Phase (°)	±1.226	±0.623	±0.378	±0.392	±0.576	±0.688	±0.754	±0.951

[1] The port 1 noise tuner switch set to the internal position, and port 2 noise receiver switch set to the normal position.

Transmission Uncertainty

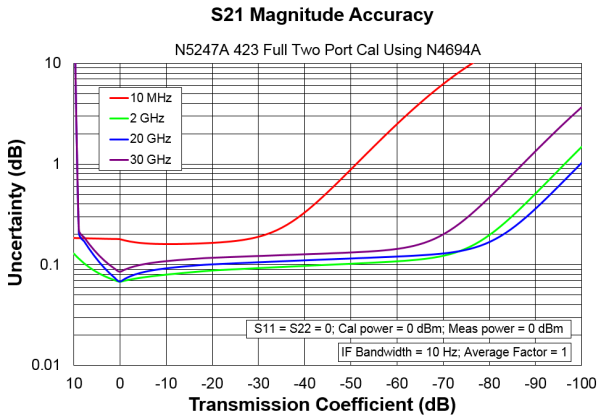

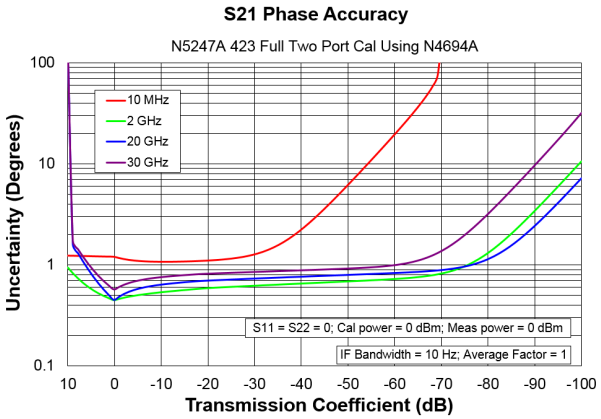

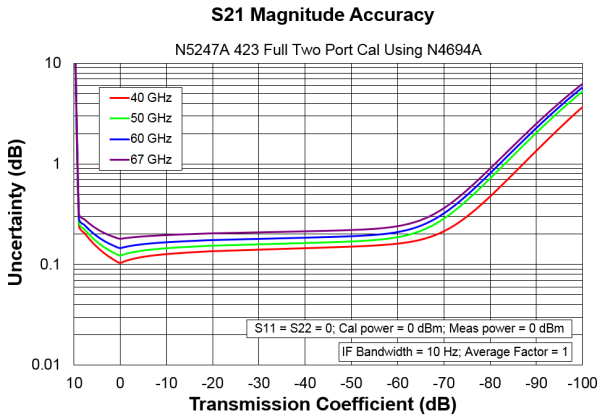

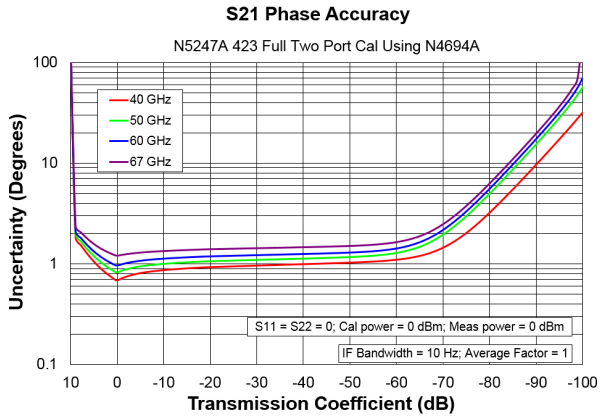

Reflection Uncertainty

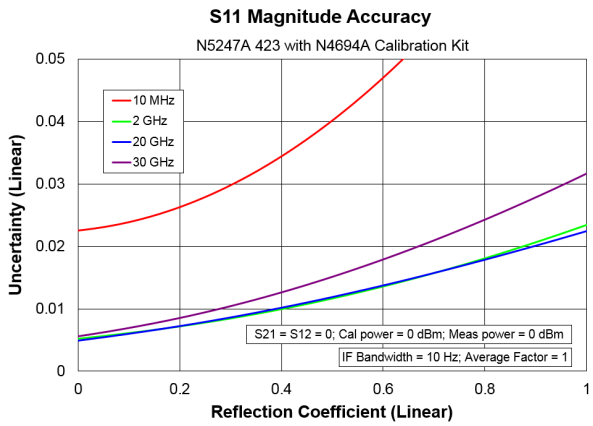

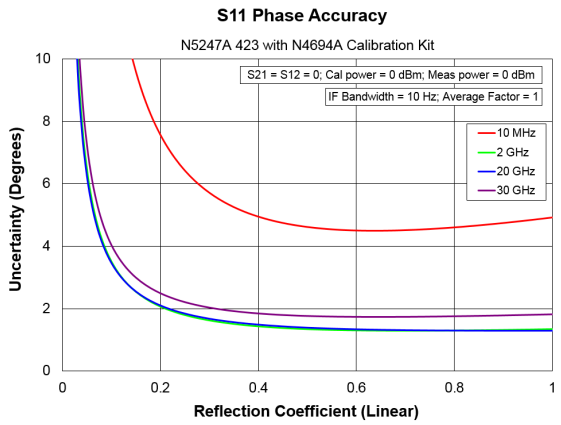

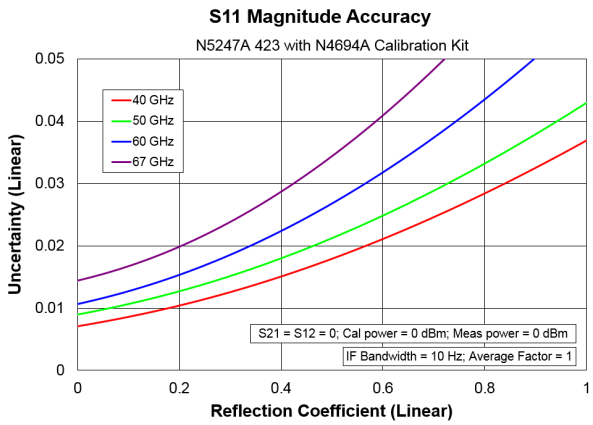

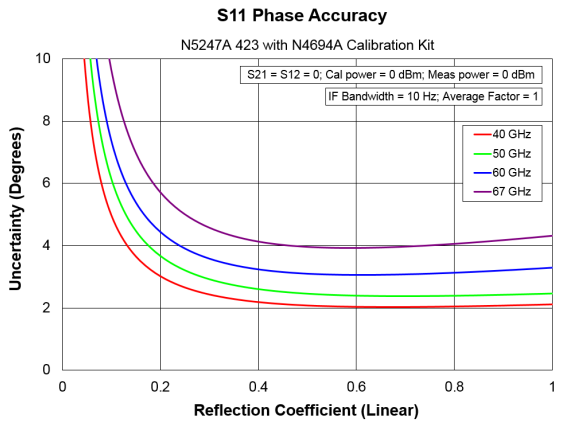

Uncorrected System Performance

Specifications apply to following conditions:

- Cable loss not included in Transmission Tracking.
- Crosstalk measurement conditions: normalized to a thru, measured with shorts on all ports, 10 Hz IF bandwidth, averaging factor of 8, alternate mode, source power set to the specified maximum power.
- With option 029, port 1 impedance tuner switch is in bypass position and port 2 noise receiver switch is in normal position unless specified.

Table 6a. Uncorrected System Performance (dB), All Options, All Ports – Specification

Description	Directivity	Source Match	Load Match
10 MHz to 50 MHz	17	7	6[1]
50 MHz to 500 MHz	24	15	11
500 MHz to 2 GHz	24	10	7
2 GHz to 3.2 GHz	20	10	7
3.2 GHz to 10 GHz	20	7	7[1]
10 GHz to 16 GHz	16	7	6
16 GHz to 20 GHz	16	7	7[1]
20 GHz to 26.5 GHz	14	7	7[1]
26.5 GHz to 50 GHz	13	7	6
50 GHz to 60 GHz	13	7	7[1]
60 GHz to 67 GHz	10	6	6

[1] Port 1 and 2 load matches with Option 029 are degraded by 1 dB.

Table 6b. Uncorrected System Performance (dB), All Options, All Ports - Typical

Description	Directivity	Source Match	Load Match	Reflection Tracking	Transmission Tracking	Cross talk
10 MHz to 50 MHz	20	9	8	+/-1.5	+/-1.5	-90
50 MHz to 100 MHz	28	19	17	+/-1.5	+/-1.5	-109
100 MHz to 500 MHz	28	19	17	+/-1.5	+/-1.5	-123
500 MHz to 2 GHz	31	14	12	+/-1.5	+/-1.5	-124
2 GHz to 3.2 GHz	28	14	12	+/-1.5	+/-1.5	-124
3.2 GHz to 10 GHz	25	11	10	+/-1.5	+/-1.5	-124
10 GHz to 13.5 GHz	23	10	10	+/-1.5	+/-1.5	-124
13.5 GHz to 16 GHz	23	11	11	+/-1.5	+/-1.5	-124
16 GHz to 20 GHz	20	11	11	+/-1.5	+/-1.5	-124
20 GHz to 26.5 GHz	18	11	11	+/-1.5	+/-1.5	-124
26.5 GHz to 35 GHz	16	11	11	+/-1.5	+/-1.5	-117
35 GHz to 43.5 GHz	16	11	11	+/-1.5	+/-1.5	-115
43.5 GHz to 46 GHz	19	11	11	+/-1.5	+/-1.5	-113
46 GHz to 50 GHz	19	11	12	+/-1.5	+/-1.5	-113
50 GHz to 60 GHz	16	11	12	+/-1.5	+/-1.5	-113
60 GHz to 67 GHz	16	9	10	+/-1.5	+/-1.5	-113
67 GHz to 70 GHz	15	10	10	+5/-10	+/-1.5	-110

Table 6c. Noise Mode[1] Uncorrected System Performance (dB), Option 029 - Specification

Description	Source Match		Load Match	
	Port 1	Port 2	Port 1	Port 2
10 MHz to 50 MHz	3	3	3	3
50 MHz to 500 MHz	8	12	8	12
500 MHz to 2 GHz	7	14	7	15
2 GHz to 3.2 GHz	7	14	7	14
3.2 GHz to 10 GHz	7	7	7	7
10 GHz to 50 GHz	6	6	6	6

[1] Noise mode sets port 1 impedance tuner switch to tuner position and port 2 noise receiver switch to noise receiver position.

Table 6d. Noise Mode[1] Uncorrected System Performance (dB), Option 029 - Typical

Description	Source Match		Load Match		Reflection Tracking		Transmission Tracking
	Port 1	Port 2	Port 1	Port 2	Port 1	Port 2	Port 1, 2
10 MHz to 50 MHz	4	4	3	4	-2.5/-5	+/- 2.5	+/- 1.5
50 MHz to 500 MHz	11	19	8	17	-2.5/-6.5	+/- 1.5	+/- 1.5
500 MHz to 3.2 GHz	12	14	7	12	-2.5/-6.5	+/- 1.5	+/- 1.5
3.2 GHz to 10 GHz	11	11	7	10	-2.5/-6.5	+/- 1.5	+/- 1.5
10 GHz to 13.5 GHz	10	10	6	10	-2.5/-6.5	+/- 1.5	+/- 1.5
13.5 GHz to 16 GHz	11	11	6	11	-2.5/-6.5	+/- 1.5	+/- 1.5
16 GHz to 20 GHz	11	11	6	11	-4/-11	+/- 1.5	+/- 1.5
20 GHz to 24 GHz	10	11	6	11	-4/-11	+/- 1.5	+/- 1.5
24 GHz to 26.5 GHz	11	11	6	11	-4/-11	+/- 1.5	+/- 1.5
26.5 GHz to 43.5 GHz	11	11	6	11	-4/-9	+/- 2.5	+/- 1.5
43.5 GHz to 46 GHz	11	10	6	10	-5/-9.5	+/- 3	+/- 1.5
46 GHz to 50 GHz	11	11	6	11	-5/-9.5	+/- 3	+/- 1.5

[1] Noise mode sets port 1 impedance tuner switch to tuner position and port 2 noise receiver switch to noise receiver position.

Test Port Output

See Block diagrams for all models and options.

With option 029, port 1 noise tuner switch is in bypass position and port 2 noise receiver switch is in normal position unless specified.

Table 7. Frequency Information, All Options

Description	Specification	Typical
Frequency Range	10 MHz to 67 GHz	67 GHz to 70 GHz
Frequency Resolution	1 Hz	--
Frequency Accuracy	+/- 1 ppm	--
Frequency Stability	--	+/-0.05 ppm, -10° to 70° C[1] +/-0.1 ppm/yr maximum[2]

[1] Assumes no variation in time.
[2] Assumes no variation in temperature.

Table 8a. Maximum Leveled Power (dBm), Options 200 or 400

Description	Specification			Typical		
	Ports 1, 3[1]		Ports 2, 4[1]	Ports 1, 3[1]		Ports 2, 4[1]
	Filtered Mode[2]	Hi Power Mode[2]		Filtered Mode[2]	Hi Power Mode[2]	
10 MHz to 50 MHz	4	10	10	12	19	17
50 MHz to 500 MHz	8	13	13	13	20	20
500 MHz to 1 GHz	8	13	13	14	19	20
1 GHz to 2 GHz	8	13	13	12	18	20
2 GHz to 3.2 GHz	10	10	13	15	16	17
3.2 GHz to 10 GHz	13	13	13	18	18	18
10 GHz to 13.5 GHz	11	11	11	16	16	15
13.5 GHz to 16 GHz	12	12	12	16	16	16
16 GHz to 19 GHz	10	10	10	15	15	15
19 GHz to 26.5 GHz	11	11	11	15	15	15
26.5 GHz to 30 GHz	10	10	10	14	14	14
30 GHz to 32 GHz	7	7	7	12	12	12
32 GHz to 35 GHz	9	9	9	13	13	13
35 GHz to 40 GHz	5	5	5	9	9	9
40 GHz to 67 GHz	10	10	10	13	13	13
67 GHz to 70 GHz	--	--	--	12	12	12

[1] Either port can be used as the source port.

[2] In Filtered Mode, the signal path goes through filters to minimize harmonics below 3.2 GHz. In Hi Power Mode, the signal bypasses the filters to maximize output power.

Table 8b. Maximum Leveled Power (dBm), Options 219 or 419

Description	Specification			Typical		
	Ports 1, 3[1]		Ports 2, 4[1]	Ports 1, 3[1]		Ports 2, 4[1]
	Filtered Mode[2]	Hi Power Mode[2]		Filtered Mode[2]	Hi Power Mode[2]	
10 MHz to 50 MHz	4	9	9	12	19	17
50 MHz to 500 MHz	8	13	13	13	20	20
500 MHz to 1 GHz	8	13	13	14	19	20
1 GHz to 2 GHz	8	13	13	12	18	20
2 GHz to 3.2 GHz	9	9	13	15	15	17
3.2 GHz to 10 GHz	11	11	12	18	18	18
10 GHz to 13.5 GHz	9	9	9	15	15	15
13.5 GHz to 16 GHz	10	10	10	15	15	15
16 GHz to 19 GHz	8	8	8	13	13	13
19 GHz to 24 GHz	8	8	8	12	12	12
24 GHz to 30 GHz	7	7	7	12	12	12
30 GHz to 32 GHz	5	5	5	10	10	10
32 GHz to 35 GHz	6	6	6	11	11	11
35 GHz to 40 GHz	1	1	1	8	8	8
40 GHz to 50 GHz	6	6	6	10	10	10
50 GHz to 60 GHz	5	5	5	10	10	10
60 GHz to 64 GHz	4	4	4	10	10	10
64 GHz to 67 GHz	4	4	4	9	9	9
67 GHz to 70 GHz	--	--	--	6	6	6

[1] Either port can be used as the source port.

[2] In Filtered Mode, the signal path goes through filters to minimize harmonics below 3.2 GHz. In Hi Power Mode, the signal bypasses the filters to maximize output power.

Table 8c. Maximum Leveled Power (dBm), Options 224 or 423

Description	Specification			Typical		
	Ports 1, 3[1]		Ports 2, 4[1]	Ports 1, 3[1]		Ports 2, 4[1]
	Filtered Mode[1]	Hi Power Mode[1]		Filtered Mode[1]	Hi Power Mode[1]	
10 MHz to 50 MHz	4	8	8	11	18	17
50 MHz to 500 MHz	7	13	13	12	19	19
500 MHz to 1 GHz	7	13	13	13	18	19
1 GHz to 2 GHz	7	13	13	12	17	19
2 GHz to 3.2 GHz	9	9	13	14	14	16
3.2 GHz to 10 GHz	11	11	12	17	17	17
10 GHz to 13.5 GHz	8	8	8	14	14	14
13.5 GHz to 16 GHz	9	9	9	14	14	14
16 GHz to 19 GHz	7	7	7	12	12	12
19 GHz to 24 GHz	7	7	7	11	11	11
24 GHz to 30 GHz	6	6	6	11	11	11
30 GHz to 32 GHz	4	4	4	9	9	9
32 GHz to 35 GHz	5	5	5	10	10	10
35 GHz to 40 GHz	0	0	0	7	7	7
40 GHz to 50 GHz	5	5	5	10	10	10
50 GHz to 60 GHz	4	4	4	9	9	9
60 GHz to 64 GHz	2	2	2	9	9	9
64 GHz to 67 GHz	2	2	2	8	8	8

[1] Either port can be used as the source port.

[2] In Filtered Mode, the signal path goes through filters to minimize harmonics below 3.2 GHz. In Hi Power Mode, the signal bypasses the filters to maximize output power.

Table 8d. Maximum Leveled Power (dBm), Options 224 or 423, Combine Mode - Typical

Description	Source 1 Port 1		Source 2 Port 1	
	Filtered Mode[1]	Hi Power Mode[1]	Filtered Mode[1]	Hi Power Mode[1]
10 MHz to 50 MHz	5	12	5	12
50 MHz to 500 MHz	6	13	6	13
500 MHz to 1 GHz	7	12	7	12
1 GHz to 2 GHz	6	11	6	11
2 GHz to 3.2 GHz	8	8	8	8
3.2 GHz to 10 GHz	9	9	9	9
10 GHz to 16 GHz	6	6	6	6
16 GHz to 19 GHz	4	4	4	4
19 GHz to 30 GHz	2	2	2	2
30 GHz to 32 GHz	-1	-1	-1	-1
32 GHz to 35 GHz	0	0	0	0
35 GHz to 40 GHz	-3	-3	-3	-3
40 GHz to 50 GHz	0	0	0	0
50 GHz to 60 GHz	-2	-2	-2	-2
60 GHz to 64 GHz	-3	-3	-3	-3
64 GHz to 67 GHz	-4	-5	-4	-5

[1] In Filtered Mode, the signal path goes through filters to minimize harmonics below 3.2 GHz. In Hi Power Mode, the signal bypasses the filters to maximize output power.

Table 8e. Maximum Leveled Power (dBm), Option 224

Description	Specification			Typical		
	Source 2 Out 1		Source 2 Out 2	Source 2 Out 1		Source 2 Out 2
	Filtered Mode[1]	Hi Power Mode[1]		Filtered Mode[1]	Hi Power Mode[1]	
10 MHz to 50 MHz	4	11	11	10	18	17
50 MHz to 500 MHz	8	17	15	12	21	21
500 MHz to 1 GHz	8	16	15	14	20	21
1 GHz to 2 GHz	8	15	15	14	19	21
2 GHz to 3.2 GHz	10	10	15	14	14	18
3.2 GHz to 10 GHz	14	14	16	19	19	20
10 GHz to 13.5 GHz	12	12	12	17	17	19
13.5 GHz to 16 GHz	13	13	13	17	17	18
16 GHz to 24 GHz	11	11	12	17	17	17
24 GHz to 30 GHz	11	11	12	16	16	16
30 GHz to 32 GHz	9	9	10	14	14	14
32 GHz to 35 GHz	11	11	11	15	15	15
35 GHz to 40 GHz	6	6	6	13	13	13
40 GHz to 50 GHz	11	11	11	16	16	17
50 GHz to 60 GHz	12	12	14	17	17	18
60 GHz to 67 GHz	12	12	14	17	17	19

[1] In Filtered Mode, the signal path goes through filters to minimize harmonics below 3.2 GHz. In Hi Power Mode, the signal bypasses the filters to maximize output power.

Table 8f. Maximum Leveled Power (dBm), Options 224 or 423 with 029[1]

Description	Specification			Typical		
	Port 1		Port 2	Port 1		Port 2
	Filtered Mode2	Hi Power Mode[2]		Filtered Mode2	Hi Power Mode[2]	
10 MHz to 50 MHz	4	8	8	11	18	17
50 MHz to 500 MHz	7	13	13	12	19	19
500 MHz to 1 GHz	7	13	13	13	18	19
1 GHz to 2 GHz	7	13	13	12	17	19
2 GHz to 3.2 GHz	9	9	13	14	14	16
3.2 GHz to 10 GHz	9	9	10	16	16	16
10 GHz to 13.5 GHz	6	6	6	13	13	13
13.5 GHz to 16 GHz	6	6	6	14	14	14
16 GHz to 19 GHz	4	4	4	12	12	12
19 GHz to 24 GHz	4	4	4	11	11	11
24 GHz to 30 GHz	4	4	4	10	10	10
30 GHz to 32 GHz	2	2	2	8	8	8
32 GHz to 35 GHz	3	3	3	9	9	9
35 GHz to 40 GHz	-2	-2	-2	6	6	6
40 GHz to 50 GHz	4	4	4	8	8	8
50 GHz to 60 GHz	3	3	3	7	7	7
60 GHz to 67 GHz	1	1	1	6	6	6

[1] Option 029 affects port 1 and port 2 maximum leveled power. Refer to Table 8c and 8e for other ports.

[2] In Filtered Mode, the signal path goes through filters to minimize harmonics below 3.2 GHz. In Hi Power Mode, the signal bypasses the filters to maximize output power.

Table 8g. Maximum Leveled Power (dBm), Options 224 or 423 with 029[1], Combine Mode – Typical

Description	Source 1 Port 1		Source 2 Port 1	
	Filtered Mode[2]	Hi Power Mode[2]	Filtered Mode[2]	Hi Power Mode[2]
10 MHz to 50 MHz	5	12	5	12
50 MHz to 500 MHz	6	13	6	13
500 MHz to 1 GHz	7	12	7	12
1 GHz to 2 GHz	6	11	6	11
2 GHz to 10 GHz	8	8	8	8
10 GHz to 13.5 GHz	5	5	5	5
13.5 GHz to 16 GHz	6	6	6	6
16 GHz to 19 GHz	4	4	4	4
19 GHz to 24 GHz	2	2	2	2
24 GHz to 30 GHz	1	1	1	1
30 GHz to 32 GHz	-2	-2	-2	-2
32 GHz to 35 GHz	-1	-1	-1	-1
35 GHz to 40 GHz	-4	-4	-4	-4
40 GHz to 50 GHz	-2	-2	-2	-2
50 GHz to 60 GHz	-4	-4	-4	-4
60 GHz to 64 GHz	-6	-6	-6	-6
64 GHz to 67 GHz	-6	-7	-6	-7

[1] Option 029 affects port 1 and port 2 maximum leveled power. Refer to Table 8c and 8e for other ports.

[2] In Filtered Mode, the signal path goes through filters to minimize harmonics below 3.2 GHz. In Hi Power Mode, the signal bypasses the filters to maximize output power.

Table 8h. Maximum Leveled Power (dBm), Noise Mode[1], Options 224 or 423 with 029 - Typical

Description	Port 1				Source 2 Port 1		Port 2
	Normal Mode		Combine Mode		Combine Mode		
	Filtered Mode2	Hi Power Mode[2]	Filtered Mode[2]	Hi Power Mode[2]	Filtered Mode2	Hi Power Mode[2]	
10 MHz to 50 MHz	6	13	0	7	0	7	5
50 MHz to 500 MHz	9	16	3	10	3	10	10
500 MHz to 2 GHz	9	14	3	8	3	8	10
2 GHz to 3.2 GHz	10	10	4	4	4	4	7
3.2 GHz to 10 GHz	12	12	4	4	4	4	6
10 GHz to 13.5 GHz	8	8	0	0	0	0	3
13.5 GHz to 16 GHz	9	9	1	1	1	1	4
16 GHz to 19 GHz	5	5	-3	-3	-3	-3	2
19 GHz to 30 GHz	4	4	-5	-5	-5	-5	0
30 GHz to 32 GHz	2	2	-8	-8	-8	-8	-2
32 GHz to 35 GHz	3	3	-7	-7	-7	-7	-1
35 GHz to 40 GHz	0	0	-10	-10	-10	-10	-4
40 GHz to 50 GHz	1	1	-9	-9	-9	-9	-2
50 GHz to 60 GHz	-1	-1	-12	-12	-12	-12	-3
60 GHz to 64 GHz	-2	-2	-14	-14	-14	-14	-8
64 GHz to 67 GHz	-2	-2	-14	-15	-15	-15	-8

[1] Noise mode sets port 1 impedance tuner switch to tuner position and port 2 noise receiver switch to noise receiver position.

[2] In Filtered Mode, the signal path goes through filters to minimize harmonics below 3.2 GHz. In Hi Power Mode, the signal bypasses the filters to maximize output power.

Table 9. Power Level Accuracy (dB) at Nominal Power[1], All Options

Description	Specification		Typical	
	Ports 1, 2, 3, 4[2]	Source 2 Out 1 Source 2 Out 2	Ports 1, 2, 3, 4[2]	Source 2 Out 1 Source 2 Out 2
10 MHz to 50 MHz	+/- 1.6	+/- 2.6	+/- 0.40	+/- 0.86
50 MHz to 1 GHz	+/- 1.0	+/- 2.0	+/- 0.29	+/- 0.40
1 GHz to 3.2 GHz	+/- 1.2	+/- 2.0	+/- 0.32	+/- 0.28
3.2 GHz to 10 GHz	+/- 1.5	+/- 2.0	+/- 0.39	+/- 0.80
10 GHz to 13.5 GHz	+/- 2.25	+/- 2.0	+/- 0.93	+/- 0.77
13.5 GHz to 20 GHz	+/- 2.25	+/- 2.5	+/- 0.51	+/- 0.68
20 GHz to 26.5 GHz	+/- 2.25	+/- 2.5	+/- 0.60	+/- 1.01
26.5 GHz to 40 GHz	+/- 3.0	+/- 3.5	+/- 0.83	+/- 1.26
40 GHz to 50 GHz	+/- 3.0	+/- 3.5	+/- 0.65	+/- 1.04
50 GHz to 60 GHz	+/- 4.0	+/- 4.0	+/- 1.03	+/- 1.57
60 GHz to 67 GHz	+/- 4.5	+/- 4.5	+/- 1.17	+/- 3.14
67 GHz to 70 GHz			+/- 4.62	+/- 7.22

[1] Level accuracy at power other than nominal power, Power Level Accuracy (dB) at Nominal Power + Power Level Linearity (dB)

[2] Any port can be used as the source port. Source in filtered mode where applicable.

Table 10a. Power Level Linearity[1] (dB), All Options - Specification

Description	Ports 1, 3[2] -25 dBm ≤ P < -20 dBm	Ports 1, 3[2] -20 dBm ≤ P < -15 dBm	Ports 1, 3[2] -15 dBm ≤ P ≤ Max Specified Port Power
10 MHz to 50 MHz	+/- 2.7	+/- 2.0	+/- 1.5
50 MHz to 67 GHz	+/- 1.5	+/- 1.5	+/- 1.5

[1] Referenced to nominal power

[2] Either port can be used as the source port. Source in filtered mode.

Table 10b. Power Level Linearity[1] (dB), All Options - Specification

Description	Ports 2, 4[2] -25 dBm ≤ P < -20 dBm	**Ports 2, 4[2]** **-20 dBm ≤ P** ≤ Max Specified Port Power
10 MHz to 50 MHz	+/- 4.0	+/- 2.0
50 MHz to 10 GHz	+/- 2.5	+/- 1.5
10 GHz to 16 GHz	+/- 2.0	+/- 1.5
16 GHz to 67 GHz	+/- 1.5	+/- 1.5

[1] Referenced to nominal power.

[2] Either port can be used as the source port.

Table 10c. Power Level Linearity[1] (dB), Option 224 - Specification

Description	Source 2 Out 1[2] -15 dBm ≤ P ≤ Max Specified Port Power	**Source 2 Out 2** **-15 dBm ≤ P ≤ Max Specified Port Power**
10 MHz to 50 MHz	+/- 2.0	+/- 2.0
50 MHz to 67 GHz	+/- 1.5	+/- 1.5

[1] Referenced to nominal power.

[2] Source in filtered mode.

Table 11a. Power Sweep Range (dB), Options 200 or 400

Description	Specification		Typical	
	Ports 1, 3[1]	Ports 2, 4[1]	Ports 1, 3[1]	Ports 2, 4[1]
10 MHz to 50 MHz	37	37	46	44
50 MHz to 500 MHz	38	38	47	47
500 MHz to 1 GHz	38	38	46	47
1 GHz to 2 GHz	38	38	45	47
2 GHz to 3.2 GHz	35	38	43	44
3.2 GHz to 10 GHz	38	38	45	45
10 GHz to 13.5 GHz	36	36	43	42
13.5 GHz to 16 GHz	37	37	43	43
16 GHz to 19 GHz	35	35	42	42
19 GHz to 24 GHz	36	36	42	42
24 GHz to 26.5 GHz	36	36	41	41
26.5 GHz to 30 GHz	35	35	41	41
30 GHz to 32 GHz	32	32	39	39
32 GHz to 35 GHz	34	34	40	40
35 GHz to 40 GHz	30	30	36	36
40 GHz to 67 GHz	35	35	40	40
67 GHz to 70 GHz	--	--	39	39

[1] Either port can be used as the source port. Source in Hi Power mode where applicable.

Table 11b. Power Sweep Range (dB), Options 219 or 419

Description	Specification		Typical	
	Ports 1, 3[1]	Ports 2, 4[1]	Ports 1, 3[1]	Ports 2, 4[1]
10 MHz to 50 MHz	36	36	46	44
50 MHz to 500 MHz	38	38	47	47
500 MHz to 1 GHz	38	38	46	47
1 GHz to 2 GHz	38	38	45	47
2 GHz to 3.2 GHz	34	38	42	44
3.2 GHz to 10 GHz	36	37	45	45
10 GHz to 13.5 GHz	34	34	42	42
13.5 GHz to 16 GHz	35	35	42	42
16 GHz to 19 GHz	33	33	40	40
19 GHz to 24 GHz	33	33	39	39
24 GHz to 30 GHz	32	32	39	39
30 GHz to 32 GHz	30	30	37	37
32 GHz to 35 GHz	31	31	38	38
35 GHz to 40 GHz	26	26	35	35
40 GHz to 50 GHz	31	31	37	37
50 GHz to 60 GHz	30	30	37	37
60 GHz to 64 GHz	29	29	37	37
64 GHz to 67 GHz	29	29	36	36
67 GHz to 70 GHz	--	--	33	33

[1] Either port can be used as the source port. Source in Hi Power mode where applicable.

Table 11c. Power Sweep Range (dB), Options 224 or 423

Description	Specification		Typical	
	Ports 1, 3[1]	Ports 2, 4[1]	Ports 1, 3[1]	Ports 2, 4[1]
10 MHz to 50 MHz	35	35	45	44
50 MHz to 500 MHz	38	38	46	46
500 MHz to 1 GHz	38	38	45	46
1 GHz to 2 GHz	38	38	44	46
2 GHz to 3.2 GHz	34	38	41	43
3.2 GHz to 10 GHz	36	37	44	44
10 GHz to 13.5 GHz	33	33	41	41
13.5 GHz to 16 GHz	34	34	41	41
16 GHz to 19 GHz	32	32	39	39
19 GHz to 24 GHz	32	32	38	38
24 GHz to 30 GHz	31	31	38	38
30 GHz to 32 GHz	29	29	36	36
32 GHz to 35 GHz	30	30	37	37
35 GHz to 40 GHz	25	25	34	34
40 GHz to 50 GHz	30	30	37	37
50 GHz to 60 GHz	29	29	36	36
60 GHz to 64 GHz	27	27	36	36
64 GHz to 67 GHz	27	27	35	35

[1] Either port can be used as the source port. Source in Hi Power mode where applicable.

Table 11d. Power Sweep Range (dB), Option 224

Description	Specification		Typical	
	Source 2 Out 1[1]	**Source 2 Out 2**	Source 2 Out 1[1]	**Source 2 Out 2**
10 MHz to 50 MHz	38	38	45	44
50 MHz to 500 MHz	42	40	48	48
500 MHz to 1 GHz	41	40	47	48
1 GHz to 2 GHz	40	40	46	48
2 GHz to 3.2 GHz	35	40	41	45
3.2 GHz to 10 GHz	39	41	46	47
10 GHz to 13.5 GHz	37	37	44	46
13.5 GHz to 16 GHz	38	38	44	45
16 GHz to 24 GHz	36	37	44	44
24 GHz to 30 GHz	36	37	43	43
30 GHz to 32 GHz	34	35	41	41
32 GHz to 35 GHz	36	36	42	42
35 GHz to 40 GHz	31	31	40	40
40 GHz to 50 GHz	36	36	43	44
50 GHz to 67 GHz	37	39	44	45

[1] Source in Hi Power mode where applicable.

Table 11e. Power Sweep Range (dB), Options 224 or 423 with 029[1]

Description	Specification		Typical	
	Ports 1, 3[2]	Ports 2, 4[2]	Ports 1, 3[2]	Ports 2, 4[2]
10 MHz to 50 MHz	35	35	45	44
50 MHz to 500 MHz	38	38	46	46
500 MHz to 1 GHz	38	38	45	46
1 GHz to 2 GHz	38	38	44	46
2 GHz to 3.2 GHz	34	38	41	43
3.2 GHz to 10 GHz	34	35	43	43
10 GHz to 13.5 GHz	30	30	40	40
13.5 GHz to 16 GHz	31	31	41	41
16 GHz to 19 GHz	29	29	39	39
19 GHz to 24 GHz	29	29	38	38
24 GHz to 30 GHz	29	29	37	37
30 GHz to 32 GHz	27	27	35	35
32 GHz to 35 GHz	28	28	36	36
35 GHz to 40 GHz	23	23	33	33
40 GHz to 50 GHz	29	29	35	35
50 GHz to 60 GHz	28	28	34	34
60 GHz to 67 GHz	26	26	33	33

[1] Option 029 affects port 1 and port 2 power sweep ranges. Refer to Table 11c and 11d for other ports.

[2] Source in Hi Power mode where applicable.

Table 12. N5247A Nominal Power (Preset Power, dBm)

Description	Options 200, 400	Options 219, 419, 224, 423	Option 224		Options 224, 423	
	Ports 1, 2, 3, 4[1]	Ports 1, 2, 3, 4[1]	Source 2 Out 1	Source 2 Out 2	Source 1 Port 1 Combine Mode	Source 2 Port 1 Combine Mode
Preset Power	0	-5	0	0	-5	-5

[1] Any port can be used as the source port.

Table 13. Power Resolution and Maximum/Minimum Settable Power, All Ports[1]

Description	Specification (dB)	Typical (dBm)		
	All Options	All Options	Options 200, 400	Options 219, 419, 224, 423
Power Resolution	0.01	--	--	--
Maximum Settable Power	--	30	--	--
Minimum Settable Power	--	--	-30	-80

[1] Any port can be used as the source port·

Table 14. 2nd and 3rd Harmonics at Max Specified Power (dBc), All Options – Typical

Description[1]	Ports 1, 3[2], Source 2 Out 1[3]	Port 2, 4[2], Source 2 Out 2
10 MHz to 2 GHz	-51	-13
2 GHz to 13.5 GHz	-60	-21
13.5 GHz to 70 GHz	-60	-60

[1] Listed frequency is fundamental frequency; test at max specified power

[2] Any port can be used as the source port. Source in Filtered mode where applicable.

[3] At port 1 max specified power.

Table 15. Non-Harmonic Spurs at Nominal Power (dBc), All Options, All Ports - Typical

Description	Based on 8kHz offset Frac-N	Based on 100kHz offset Frac-N
10 MHz to 500 MHz	-50	-50
500 MHz to 2GHz	-60	-42
2 GHz to 4 GHz	-57	-45
4 GHz to 8 GHz	-51	-39
8 GHz to 16 GHz	-45	-33
16 GHz to 48 GHz	-39	-27
48 GHz to 64 GHz	-33	-21
64 GHz to 70 GHz	-27	-15

Table 16. Phase Noise (dBc/Hz), All Options, All Ports - Typical

Description	**1 kHz Offset**	**10 kHz Offset**	**100 kHz Offset**	**1 MHz Offset**
10 MHz to 500 MHz	-100	-95	-95	-120
500 MHz to 1 GHz	-107	-117	-112	-127
1 GHz to 2 GHz	-101	-111	-106	-121
2 GHz to 4 GHz	-95	-105	-100	-115
4 GHz to 8 GHz	-89	-99	-94	-109
8 GHz to 16 GHz	-83	-93	-88	-103
16 GHz to 32 GHz	-77	-87	-82	-97
32 GHz to 64 GHz	-71	-81	-76	-91
64 GHz to 70 GHz	-65	-75	-70	-85

Test Port Input

Table 17. Noise Floor[1] (dBm) @ 10 Hz IFBW, All Ports, All Options

Description	Specification		Typical	
	Test Port	Direct Receiver Access Input	Test Port	Direct Receiver Access Input
10 MHz to 50 MHz[2]	-70	-100	-76	-106
50 MHz to 100 MHz[2]	-92	-105	-98	-111
100 MHz to 500 MHz[2]	-100	-113	-107	-120
500 MHz to 1 GHz	-110	-123	-116	-129
1 GHz to 10 GHz	-115	-127	-119	-131
10 GHz to 13.5 GHz	-116	-128	-121	-133
13.5 GHz to 16 GHz	-117	-129	-121	-133
16 GHz to 26.5 GHz	-118	-129	-122	-133
26.5 GHz to 35 GHz	-106	-117	-110	-121
35 GHz to 40 GHz	-105	-116	-110	-121
40 GHz to 50 GHz	-102	-112	-108	-118
50 GHz to 60 GHz	-101	-110	-107	-116
60 GHz to 67 GHz	-100	-108	-107	-115
67 GHz to 70 GHz	--	--	-95	-101

[1] Total average (rms) noise power calculated as the mean value of a linear magnitude trace expressed in dBm.
[2] May typically be degraded at particular frequencies below 500 MHz due to spurious receiver residuals.

Table 18. Test Port Compression at 0.1 dB (dBm), All Options, All Ports - Typical

Description	Typical
10 MHz to 10 GHz	15
10 GHz to 30 GHz	12
30 GHz to 67 GHz	11

Table 19. Receiver Compression Test Port Power[1] (dBm), All Ports - Specification

	Test Port Power			Receiver compression	
Description	**Options 200, 400**	**Options 219, 419**	**Options 224, 423**	**Magnitude (dB)**	**Phase (degree)**
500 MHz to 3.2 GHz	13	13	13	0.15	1.2
3.2 GHz to 10 GHz	13	12	12	0.15	1.2
10 GHz to 13.5 GHz	11	9	8	0.15	1.2
13.5 GHz to 16 GHz	12	10	9	0.15	1.2
16 GHz to 19 GHz	10	8	8	0.15	1.2
19 GHz to 26.5 GHz	11	8	8	0.15	1.2
26.5 GHz to 30 GHz	10	8	8	0.15	1.2
30 GHz to 32 GHz	8	8	8	0.15	1.2
32 GHz to 35 GHz	9	8	8	0.15	1.2
35 GHz to 40 GHz	8	8	8	0.15	1.2
40 GHz to 67 GHz	10	8	8	0.15	1.2

[1] Test port receiver compression at input levels below 500 MHz is negligible due to coupler roll off.

Table 20a. Trace Noise[1] Magnitude (dB rms)

Description	**Specification**	**Typical**		
	1 kHz IFBW	**1 kHz IFBW**	**100 kHz IFBW**	**600 kHz IFBW**
10 MHz to 50 MHz	0.05	0.0249	0.240	0.580
50 MHz to 100 MHz	0.006	0.0017	0.016	0.040
100 MHz to 500 MHz	0.002	0.0007	0.007	0.016
500 MHz to 1 GHz	0.002	0.0004	0.003	0.007
1 GHz to 26.5 GHz	0.002	0.0005	0.003	0.006
26.5 GHz to 43.5 GHz	0.003	0.0008	0.008	0.017
43.5 GHz to 67 GHz	0.003	0.0009	0.008	0.017
67 GHz to 70 GHz	--	0.0015	0.023	0.028

[1] Ratioed measurement, nominal power at test port.

Table 20b. Trace Noise[1] Phase (deg rms)

Description	Specification	Typical		
	1 kHz IFBW	1 kHz IFBW	100 kHz IFBW	600 kHz IFBW
10 MHz to 50 MHz	0.40	0.1441	1.400	4.000
50 MHz to 100 MHz	0.04	0.0095	0.092	0.220
100 MHz to 500 MHz	0.02	0.0046	0.044	0.110
500 MHz to 1 GHz	0.02	0.0018	0.017	0.041
1 GHz to 26.5 GHz	0.02	0.0075	0.016	0.039
26.5 GHz to 43.5 GHz	0.03	0.0120	0.044	0.130
43.5 GHz to 50 GHz	0.03	0.0193	0.055	0.130
50 GHz to 67 GHz	0.04	0.0193	0.055	0.130
67 GHz to 70 GHz	--	0.0200	0.086	0.200

[1] Ratioed measurement, nominal power at test port.

Table 21. Reference Level - Specification

Description	Magnitude (dB)	Phase (degree)
Range	+/-500	+/-500
Resolution	0.001	0.01

Table 22. Stability[1] - Typical

Description	Magnitude (dB/°C)	Phase (degree/°C)
10 MHz to 50 MHz	0.05	0.4
50 MHz to 16 GHz	0.01	0.2
16 GHz to 20 GHz	0.01	0.3
20 GHz to 50 GHz	0.02	0.7
50 GHz to 67 GHz	0.03	1.0
67 GHz to 70 GHz	0.05	1.1

[1] Stability is defined as a ratio measurement made at the test port.

Table 23. Damage Input Level – Specification

Description	RF (dBm)	DC (V)
Test Ports 1, 2, 3, 4 (All Options)	> +24	40
Source 2 Out 1, Source 2 Out 2 (Option 224 only)	> +24	0
Test Port 1, Noise Mode[1] (Option 029 only)	> +10	40
Test Port 2, Noise Mode[1] (Option 029 only)	> +27	40

[1] Noise mode sets port 1 impedance tuner switch to internal tuner position and port 2 noise receiver switch to noise receiver position.

Noise Receiver Input (Option 029 only)

Table 24. Noise Receiver Bandwidth

Description	Allowable Bandwidths
10 MHz to 25 MHz	800 kHz, 2 MHz
25 MHz to 60 MHz	800 kHz, 2/4 MHz
60 MHz to 150 MHz	800 kHz, 2/4/8 MHz[1]
150 MHz to 50 GHz	800 kHz, 2/4/8/24 MHz[1]

[1] 8 and 24 MHz bandwidths are available only with calibration using noise source.

Table 25. Receiver Noise Figure (dB), Port 2, @ 4 MHz BW, High Gain Setting

Description	Specification	Typical
10 MHz to 50 MHz	--	9
50 MHz to 1.5 GHz	10	7
1.5 GHz MHz to 5 GHz	12	10
5 GHz to 20 GHz	15	11
20 GHz to 45 GHz	16	11
45 GHz to 50 GHz	18	14

Table 26. Noise Figure Trace Noise[1] (dB rms) @ 4 MHz BW, All Gain Settings

Frequency	Specification	Typical
10 MHz to 50 MHz	--	0.07
50 MHz to 50 GHz	0.11	0.07

[1] Trace noise magnitude performance on noise figure trace or sometime called noise jitter, 201 points, 1 noise average, with terminated input. May typically be degraded at frequencies below 500 MHz due to spurious noise receiver residuals.

Table 27. Noise Receiver Linearity (dB) @ 4 MHz BW – Specification

Power Range (dBm)			Specification
Low Gain Setting Reference to -60 dBm	Medium Gain Setting Reference to -70 dBm	High Gain Setting Reference to -80 dBm	
-36 to -64	-48 to -76	-58 to -85	+/-0.05
-64 to -70	-76 to -87	-85 to -92	+/-0.07

Table 28. Noise Receiver Input Range - Specification

Description	Max DUT NF + Gain (dB)[1]			Max Input Power (dBm) for <0.1 dB Compression[2]		
	High Gain Setting	Medium Gain Setting	Low Gain Setting	High Gain Setting	Medium Gain Setting	Low Gain Setting
500 MHz to 4.5 GHz	37	53	68	<=-51	<=-35	<=-20
4.5 GHz to 6 GHz	38	53	71	<=-50	<=-35	<=-17
6 GHz to 24 GHz	47	57	66	<=-41	<=-31	<=-22
24 GHz to 26.5 GHz	45	58	66	<=-43	<=-30	<=-22
26.5 GHz to 36 GHz	45	56	57	<=-43	<=-32	<=-31
36 GHz to 50 GHz	39	51	58	<=-49	<=-37	<=-30

[1] Limited by 0.1 dB receiver compression. Applies to devices with bandwidth <400 MHz. For devices with higher bandwidths, calculate the DUT output noise power as -174 dBm + 10*log10(B) + Gain (dB) + NF (dB), where B is the bandwidth of the DUT in Hz, and use the Max Input Power specification.

[2] Derived from ensuring < 0.25 dB compression with a CW signal 5 dB higher than the stated max input power value for 0.1 dB compression. Referenced to test port 2.

Dynamic Accuracy

Table 29. Dynamic Accuracy - Specification

Standard receiver accuracy of the test port input power reading relative to the reference input power level. It is verified with the following measurements:

- Compression over frequency
- IF linearity at a single frequency of 1.998765 GHz using a reference level of -20 dBm for an input power range of 0 to -60 dBm. For value below -60 dBm, refer to VNA Receiver Dynamic Accuracy Specifications and Uncertainties.

Dynamic Accuracy, 10 MHz

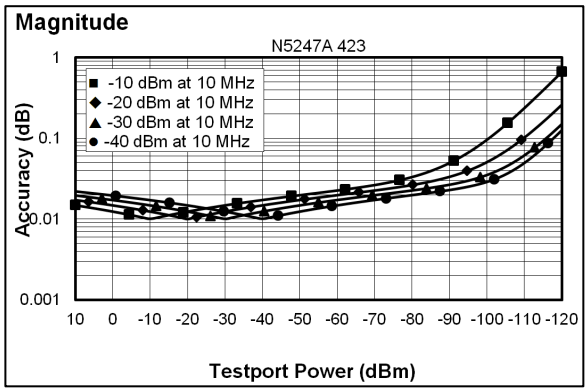

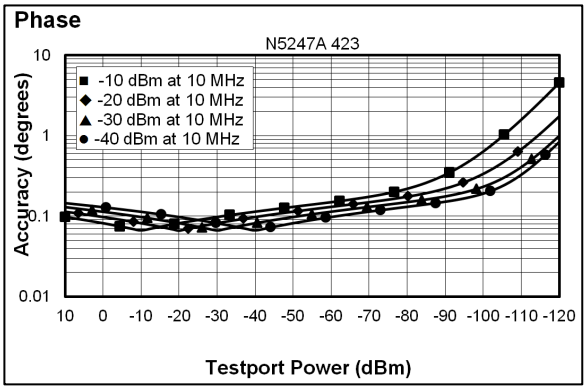

Dynamic Accuracy, 50 MHz

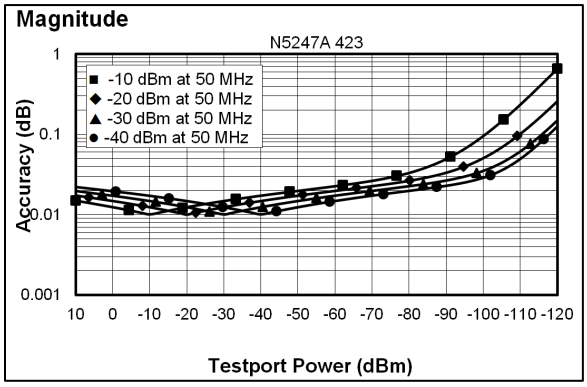

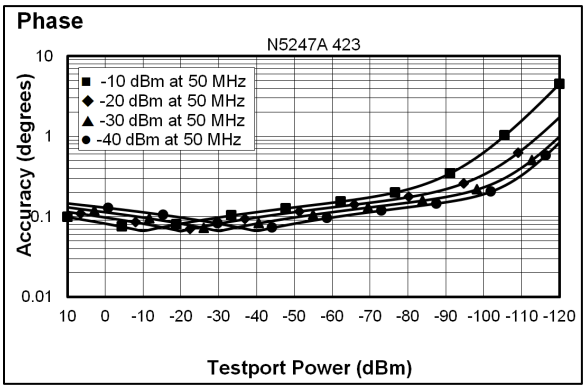

Dynamic Accuracy, 500 MHz

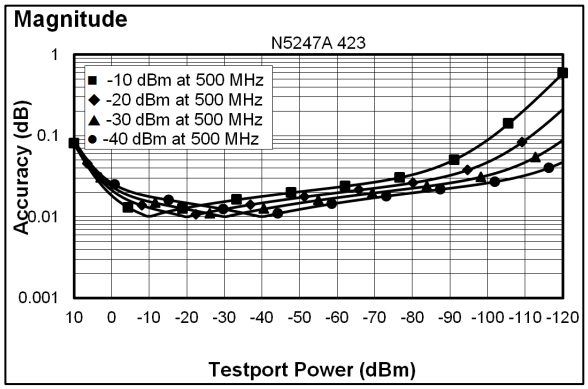

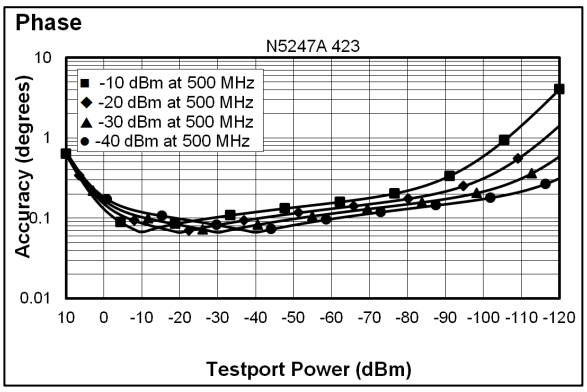

Dynamic Accuracy, 1 GHz

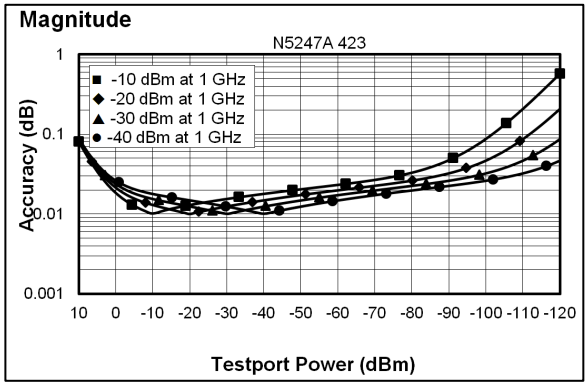

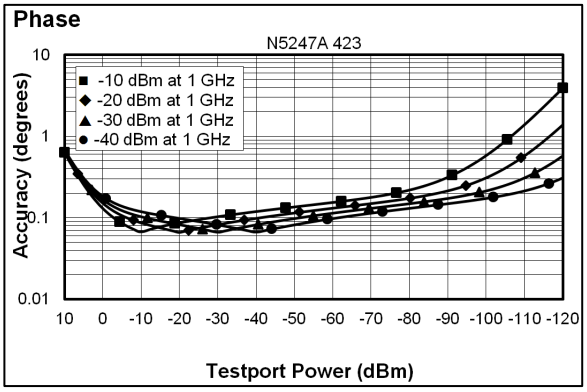

Dynamic Accuracy, 2 GHz

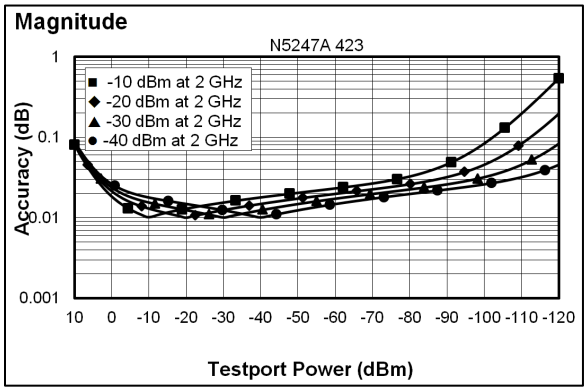

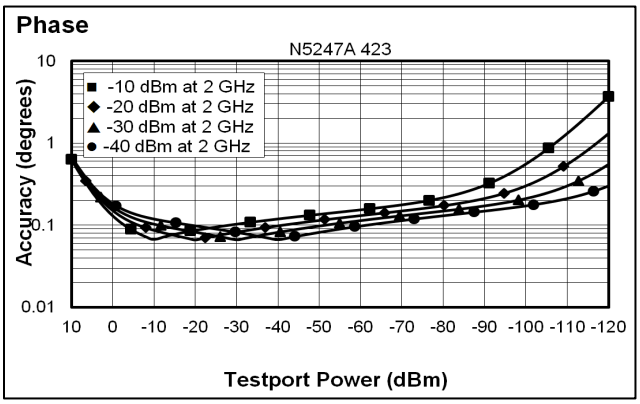

Dynamic Accuracy, 20 GHz

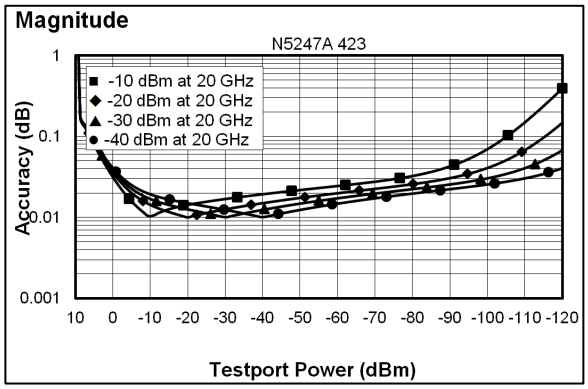

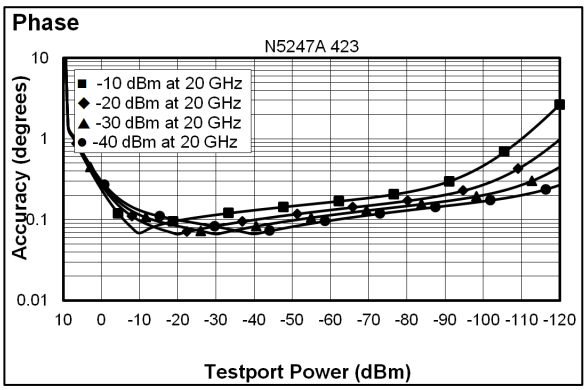

Dynamic Accuracy, 26.5 GHz

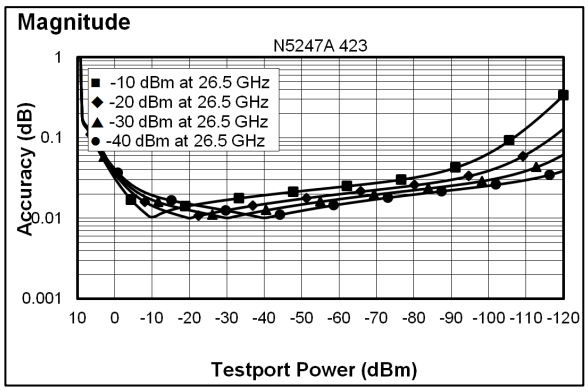

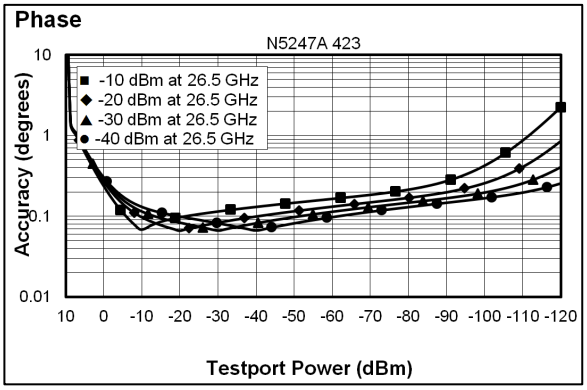

Dynamic Accuracy, 35 GHz

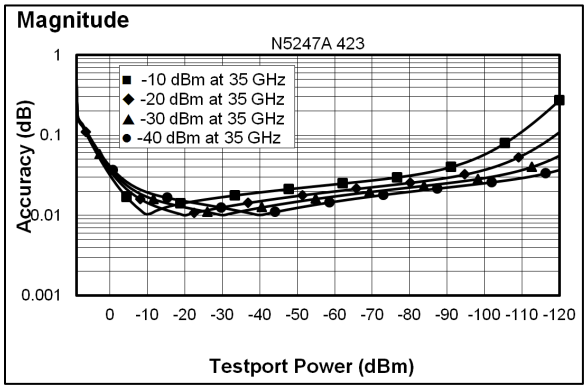

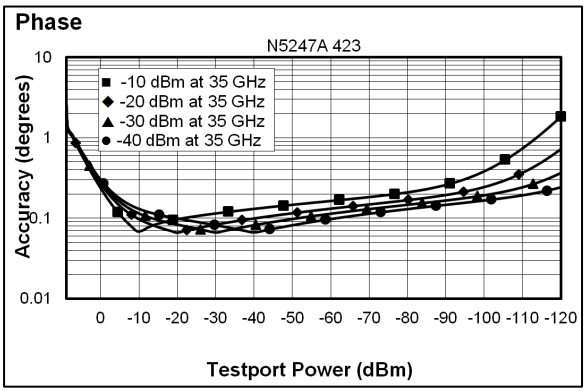

Dynamic Accuracy, 40 GHz

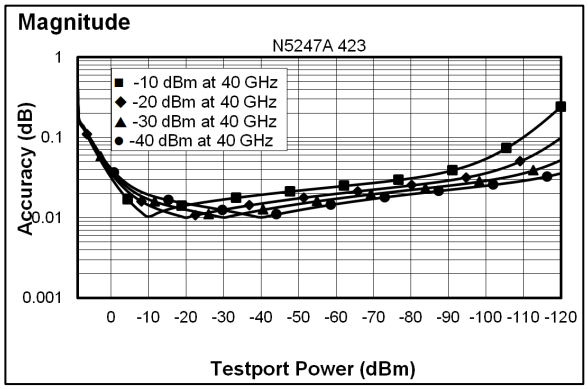

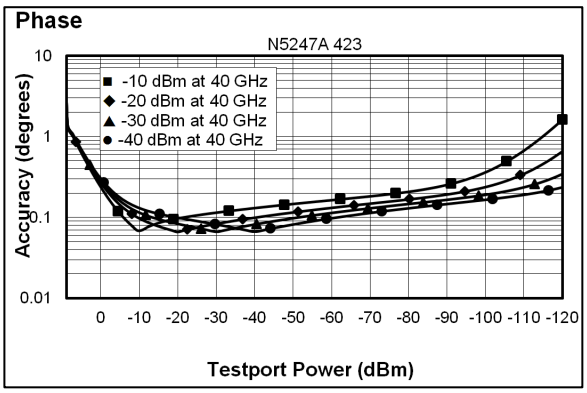

Dynamic Accuracy, 50 GHz

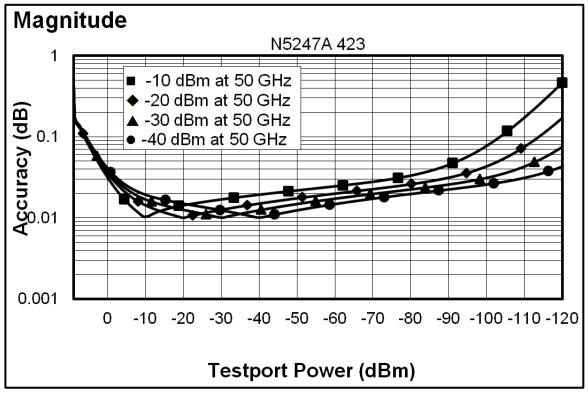

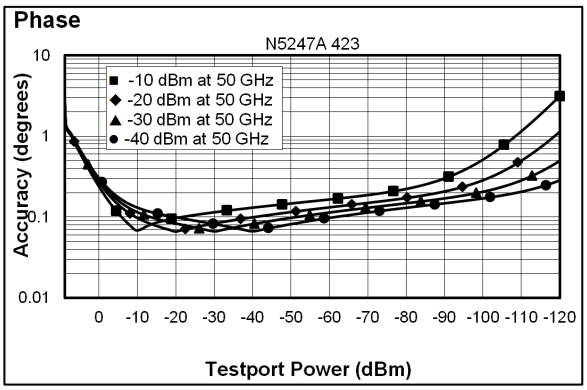

Dynamic Accuracy, 60 GHz

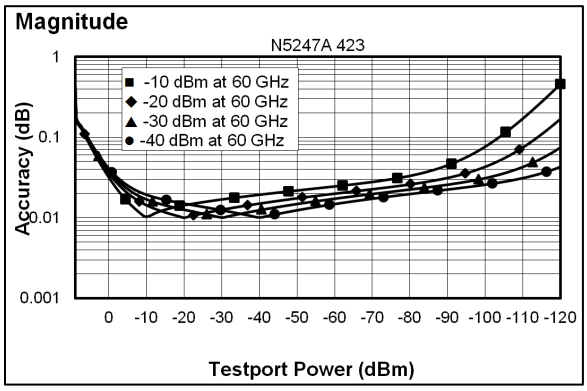

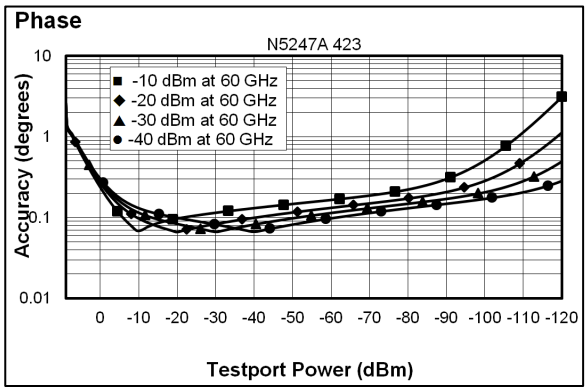

Dynamic Accuracy, 67 GHz

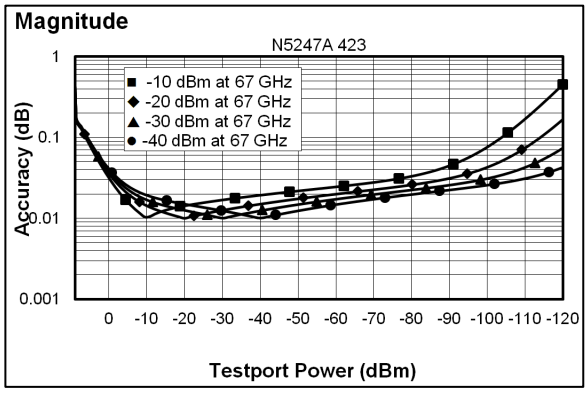

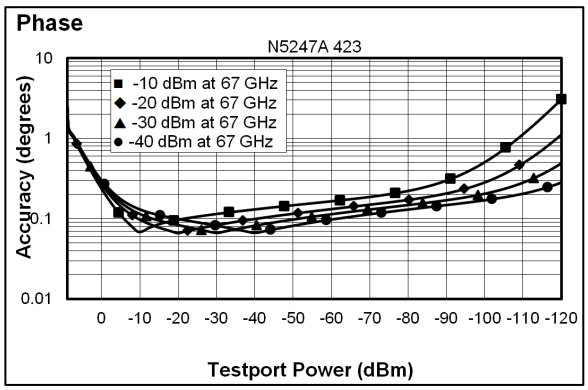

Table 30. Test Port Input (Group Delay)[1]

Description	Typical Performance
Aperture (selectable)	(frequency span)/(number of points -1)
Maximum Aperture	20% of frequency span
Range	0.5 x (1/minimum aperture)
Maximum Delay	Limited to measuring no more than 180° of phase change within the minimum aperture.)
Accuracy	See graph below

The following graph shows characteristic group delay accuracy with full 2-port calibration and a 10 Hz IF bandwidth. Insertion loss is assumed to be < 2 dB and electrical length to be ten meters.

For any S_{ij} Group Delay measurement, $S_{ii} = 0$, $S_{ij} = 1$, $S_{ji} = 0$, $S_{kl} = 0$ for all $kl \neq ij$

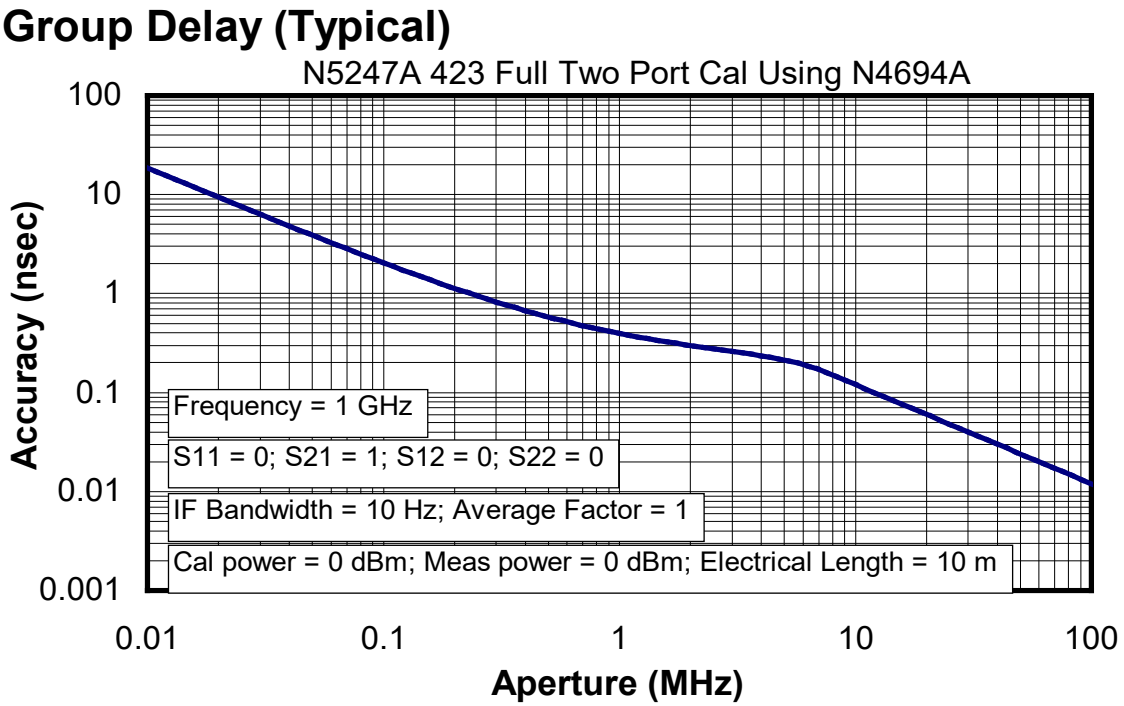

In general, the following formula can be used to determine the accuracy, in seconds, of specific group delay measurement:

±Phase Accuracy (deg)/[360 × Aperture (Hz)]

Depending on the aperture and device length, the phase accuracy used is either incremental phase accuracy or worst-case phase accuracy.

[1] Group delay is computed by measuring the phase change within a specified frequency step (determined by the frequency span and the number of points per sweep).

General Information

- Miscellaneous Information
- Front Panel
- Rear Panel
- Environment and Dimensions

Table 31. Miscellaneous Information

Description	Supplemental Information
System IF Bandwidth Range	1 Hz to 15 MHz (7 MHz, 10 MHz, and 15 MHz IFBWs are available ONLY with FW A.09.42 and later, and with DSP version 5)
CPU	For the latest information on CPUs and associated hard drives, visit: http://na.support.keysight.com/pna/hdnumbers.html
LXI	Class C

Table 32. Front Panel Information, All Options

Description	Typical Performance
RF Connectors	
Test Ports	1.85 mm (male), 50 ohm (nominal), 0.002 in. Center Pin Recession (characteristic)
Jumpers	1.85 mm (female) connectors with 1.85 mm (male) jumper cables
USB 2.0 Ports - Master (4 ports)	
Standard	Compatible with USB 2.0
Connector	USB Type-A female
Display	
Size	26.3 cm (10.4 in) diagonal color active matrix LCD; 1024 (horizontal) X 768 (vertical) resolution
Refresh Rate	Vertical 60 Hz; Horizontal 46.08 kHz
Pixels	Any of the following would cause a display to be considered faulty: ▪ A complete row or column consists of “stuck” or “dark” pixels. ▪ More than six “stuck on” pixels (but not more than three green) or more than 0.002% of the total pixels are within the LCD specifications. ▪ More than twelve “dark” pixels (but no more than seven of the same color) or more than 0.004% of the total pixels are within the LCD specifications. ▪ Two or more consecutive "stuck on" pixels or three or more consecutive "dark" pixel (but no more than one set of two consecutive dark pixels) ▪ “Stuck on” “dark” pixels are less than 6.5 mm apart (excluding consecutive pixels)

Table 32. (Continued) Front Panel Information, All Options

Description	Typical Performance
Display Range	
Magnitude	+/-2500 dB (at 500 dB/div), max
Phase	+/-2500° (at 500 degrees/div), max
Polar	10 pUnits, min 10,000 Units, max
Display Resolution	
Magnitude	0.001 dB/div, min
Phase	0.01°/div, min
Marker Resolution	
Magnitude	0.001 dB, min
Phase	0.01°, min
Polar	10 pUnit, min

Table 33. Rear Panel Information, All Options

Description	Typical Performance
10 MHz Reference In	
Connector	BNC, female
Input Frequency	10 MHz ±10 ppm
Input Level	-15 dBm to +20 dBm
Input Impedance	200 Ω, nom.
10 MHz Reference Out	
Connector	BNC, female
Output Frequency	10 MHz ±1 ppm
Signal Type	Sine Wave
Output Level	+10 dBm ±4 dB into 50 Ω
Output Impedance	50 Ω, nominal
Harmonics	<-40 dBc, typical

Table 33. (Continued) Rear Panel Information

Description	Typical Performance			
External IF Inputs				
Function	Allows use of external IF signals from remote mixers, bypassing the PNA's first converters			
Connectors	SMA (female); A, B, C, D, R (4-port); A, B, R1, R2 (2-port)			
Frequency				
Path	**DSP Version**	**IF Bandwidth**	**RF Frequency**	**IF Frequency**
Normal IF path:	5	<= 600 kHz	< 53 MHz	2.479339 MHz
			>= 53 MHz	7.438017 MHz
		1 MHz	All	7.692 MHz
		1.5 MHz	All	7.368 MHz
		2 MHz	All	8.450 MHz
		3 MHz	All	8.163 MHz
		5 MHz	All	6.897 MHz
		7 MHz	All	10.53 MHz
		10 MHz	All	15.38 MHz
		15 MHz	All	22.22 MHz
Narrowband IF path:	4 or 5	All	All	10.70 MHz
Input Impedance	50 Ω			
RF Damage Level	+23 dBm			
DC Damage Level	5.5 VDC			
0.1 dB Compression Point				
Normal IF path	-9.0 dBm at 7.438 MHz			
Narrowband IF path	-17 dBm at 10.70 MHz			
Pulse Inputs (IF Gates)				
Function	Internal receiver gates used for point-in-pulse and pulse-profile measurements			
Connectors	15-pin mini D-sub			
Input Impedance	1 K Ohm			
Minimum Pulse Width, Source Modulators	20 ns			
Minimum Pulse Width, Receiver Gates	20 ns			
DC Damage Level	5.5 VDC			
Drive Voltage	0 V (off), +3.3 V (on), nominal			

Table 33. (Continued) Rear Panel Information

Description	Typical Performance
RF Pulse Modulator Input (Source Modulator)	
On/Off Ratio	
10 MHz to 3.2 GHz	-64 dB
3.2 GHz to 67 GHz	-80 dB
Pulse Period	
Minimum	20 ns
Maximum	70 s
Pulse Outputs	
Voltage (TTL)	High: 3.3V to 3.5V Low: <1V
Impedance	50 Ohm
External Test Set Driver	
Function	Used for driving remote mixers
Connections	3.5 mm (female)
RF Output Frequency Range	3.2 GHz to 19 GHz
LO Output Frequency Range	0.01 GHz to 70 GHz

Rear Panel LO Power[1]	Upper Limit, Typical (dBm)	Lower Limit, Typical (dBm)
1.7 GHz to 6.759 GHz	5	-3
6.759 GHz to 15.5 GHz	0	-6
15.5 GHz to 26.5 GHz	4	-5

Rear Panel RF Power	Maximum Output Power, Typical (dBm)
3.2 GHz to 5 GHz	+3
5 GHz to 19 GHz	+8

[1] LO output available in full analyzer's frequency range. The power is tested only from 3.2 GHz to 26.5 GHz.

Table 33. (Continued) Rear Panel Information

Description	Typical Performance
Devices Supported	Resolutions
Flat Panel (TFT)	1024 X 768, 800 X 600, 640 X 480
Flat Panel (DSTN)	800 X 600, 640 X 480
CRT Monitor	1280 X 1024, 1024 X 768, 800 X 600, 640 X 480
Simultaneous operation of the internal and external displays is allowed, but with 640 X 480 resolution only. If you change resolution, you can only view the external display (internal display will "white out").	
Bias Tee Inputs	
Connectors	BNC(f) for ports 1, 2, 3 and 4
Fuse	500 mA, bi-pin style
Maximum Bias Current	+/-200 mA with no degradation of RF specifications
Maximum Bias Voltage	+/-40 VDC
Trigger Inputs/Outputs	BNC(f), TTL/CMOS compatible
Test Set IO	25-pin D-Sub connector, available for external test set control.
Power IO	9-pin D-Sub, female; analog and digital IO
Handler IO	36-pin parallel I/O port; all input/output signals are default set to negative logic; can be reset to positive logic via GPIB command.
Pulse I/O	15-pin D connector provides access to Pulse Modulators and Generators
GPIB	Two ports - dedicated controller and dedicated talker/listener. 24-pin D-sub (Type D-24), female; compatible with IEEE-488.
PCIe	Cabled PCIe x4 connector is a 4-lane slot (not currently used)
USB Ports	Two SuperSpeed USB ports (900 mA each), one USB port below LAN connector, and one USB device port. There are also four USB ports (500 mA each) on the front panel. The total current limit for all rear panel USB ports is 2.3 amps. The total current limit for all front panel USB ports is 2 amps.
LAN	10/100/1000 BaseT Ethernet, 8-pin configuration; auto selects between the data rates
VGA Video Output	15-pin mini D-Sub; Drives VGA compatible monitors
Mini DisplayPort	Miniature DisplayPort connector for connection to external displays
Line Power	
Frequency, Voltage	50/60/400 Hz for 100 to 120 VAC 50/60 Hz for 220 to 240 VAC
	Power supply is auto switching
Max	450 watts

Table 34. Analyzer Dimensions and Weight

The N5247A is shipped with bottom feet, handles, and front and rear hardware.

See detailed PNA dimension drawings at: http://na.support.keysight.com/pna/PNADimensions.pdf

Cabinet Dimensions		Metric (mm)	Imperial (inches)
Height			
Without bottom feet:	EIA RU[1] = 6	266.1	10.5
With bottom feet		280.0	11.0
Width			
Without handles or rack-mount flanges		425.9	16.8
With handles, without rack-mount flanges		458.7	18.1
With handles and rack-mount flanges		482.9	19.0
Depth			
Without front and rear panel hardware		582.3	22.9
With front and rear panel hardware, handles		649.6	25.6

Weight (nominal)	Net	Shipping
2-port models (Option 224 with 029)	46.3 kg (102 lb)	62.1 kg (137 lb)
4-port models (Option 423 with 029)	49.0 kg (108 lb)	65.3 kg (144 lb)

[1] Electronics Industry Association rack units. 1 RU = 1.75 in.

Operating Environment

For Regulatory and Environmental information, refer to the PNA Series Installation and Quick Start Guide, located online at http://literature.cdn.keysight.com/litweb/pdf/E8356-90001.pdf.

Measurement Throughput Summary

- Typical Cycle Time for Measurement Completion
- Cycle Time vs. IF Bandwidth
- Cycle Time vs. Number of Points
- Data Transfer Time

Cycle time Includes sweep time, retrace time and band-crossing time. Analyzer display turned off with DISPLAY:ENABLE OFF. Add 21 ms for display on. Data for one trace (S_{11}) measurement.

Table 35a. Cycle Time (ms) for Measurement Completion, All Options - Typical

Sweep Range	IF Bandwidth		Number of Points				
			201	401	1601	16001	32001
9 GHz to 10 GHz	600 kHz	Uncorrected	9.7	12.2	31	258	524
		2-Port cal	25.3	31	69	539	1077
	10 kHz	Uncorrected	39	60	224	2194	4396
		2-Port cal	84	128	456	4405	8822
	1 kHz	Uncorrected	230	451	1764	17219	34220
		2-Port cal	468	909	3536	34459	68474
10 GHz to 20 GHz	600 kHz	Uncorrected	25	29	50	276	533
		2-Port cal	58	65	107	563	1109
	10 kHz	Uncorrected	73	134	287	2205	4405
		2-Port cal	154	276	582	4431	8844
	1 kHz	Uncorrected	238	464	1803	17564	34908
		2-Port cal	484	935	3613	35156	69849

Table 35b. Typical Cycle Time (ms) for Full-Span Measurement Completion - Typical

10 MHz to 67 GHz		Number of Points				
IF Bandwidth		201	401	1601	16001	32001
600 kHz	Uncorrected	60	82	121	393	664
	2-Port cal	128	172	251	820	1420
10 kHz	Uncorrected	94	161	541	2433	4641
	2-Port cal	232	366	1143	5197	10091
1 kHz	Uncorrected	260	491	1856	17908	35559
	2-Port cal	879	1351	4259	38991	77239

Table 36. Cycle Time vs. IF Bandwidth - Typical

Applies to the Preset condition (201 points, correction off) except for the following changes:

- CF = 10 GHz
- Span = 100 MHz
- Display off (add 21 ms for display on)

Cycle time includes sweep and retrace time.

Description	Typical Performance	
IF Bandwidth (Hz)	Cycle Time (ms)	Trace Noise Magnitude (dB rms)
600,000	10	0.035
100,000	9.3	0.013
30,000	12.5	0.009
10,000	33	0.005
3,000	75	0.0032
1,000	225	0.003
300	644	0.002
100	1828	0.0015
30	5986	0.0013
10	17837	0.0013
3	59282	0.0014

Table 37. Cycle Time (ms) vs. Number of Points - Typical

Applies to the Preset condition (correction off) except for the following changes:

- CF = 10 GHz
- Span = 100 MHz
- Display off (add 21 ms for display on)

Cycle time includes sweep and retrace time.

Description	**IF Bandwidth (Hz)**			
Number of Points	**1,000**	**10,000**	**30,000**	**600,000**
3	9.1	7.8	7.8	7.8
11	18.2	9.1	8.2	8.2
51	62	12.8	8.5	8.5
101	117	20	9.7	9.4
201	226	33	13.2	10
401	443	61	21	13.5
801	873	115	37	19.1
1,601	1729	225	67	32
6,401	6806	884	252	112
16,001	16859	2205	620	272
32,001	33503	4416	1241	544

Table 38. Data Transfer Time[1] (ms) - Typical

Description	Number of Points				
	201	**401**	**1601**	**16,001**	**32,001**
SCPI over GPIB (Program executed on external PC[2])					
32-bit floating point	5.6	10.5	39.9	400	800
64-bit floating point	10.5	20.3	79.2	788	1576
ASCII	46	92.5	370	3702	5404
SCPI over SICL/LAN or TCP/IP Socket[3] (Program executed in the analyzer)					
32-bit floating point	0.18	0.21	0.5	3.6	7.2
64-bit floating point	0.22	0.28	0.62	5.3	10.6
ASCII	6.3	12.3	47.3	47.0	940
COM[3] (Program executed in the analyzer)					
32-bit floating point	<0.2	<0.2	<0.2	0.46	0.9
Variant type	0.6	1	3.5	35	75
DCOM over LAN[3] (Program executed on external PC)					
32-bit floating point	0.35	0.35	0.54	2.65	5.3
Variant type	1.1	1.8	6.5	64	128

[1] Measured with the analyzer display off. Values will increase slightly if the analyzer display is on.

[2] Measured when using the SCPI command DISPlay: VISible OFF.

[3] Values are for real and imaginary pairs, with the analyzer display off, using Gigabit Ethernet.

NOTE Specifications for Recall & Sweep Speed are not provided for the N5247A analyzers.

Specifications: Front-Panel Jumpers

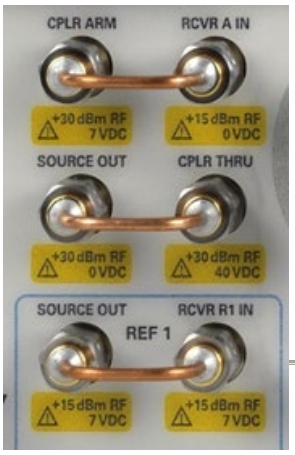

NOTE All PNA-X options have the following front-panel jumpers for each port.

- Measurement Receiver Inputs
- Reference Receiver Inputs and Reference Source Outputs
- Source Outputs
- Coupler Inputs

Table 39. Measurement Receiver Inputs (dBm) - Typical

(RCVR A, B, C, D IN) @ 0.1dB Typical Compression

Description	All Options
10 MHz to 3.2 GHz	-4
3.2 GHz to 26.5 GHz	-5
26.5 GHz to 50 GHz	-4
50 GHz to 64 GHz	-3
64 GHz to 67 GHz	-4
67 GHz to 70 GHz	-2

Table 40a. Reference Receiver Inputs and Reference Source Outputs (dBm) - Typical

(RCVR R1 IN, REF 1 SOURCE OUT) @ Max Specified Output Power

Description	Options 200, 400		Options 219, 419		Options 224, 423	
	Filtered Mode[1]	Hi Power Mode[1]	Filtered Mode[1]	Hi Power Mode[1]	Filtered Mode[1]	Hi Power Mode[1]
10 MHz to 50 MHz	-33	-25	-32	-27	-32	-25
50 MHz to 500 MHz	-21	-16	-19	-14	-19	-14
500 MHz to 1 GHz	-14	-9	-14	-9	-15	-9
1 GHz to 2 GHz	-11	-6	-11	-5	-12	-6
2 GHz to 3.2 GHz	-10	-10	-11	-11	-11	-11
3.2 GHz to 10 GHz	-8	-8	-9	-9	-9	-9
10 GHz to 16 GHz	-10	-10	-11	-11	-12	-12
16 GHz to 26.5 GHz	-12	-12	-13	-13	-14	-14
26.5 GHz to 30 GHz	-13	-13	-14	-14	-15	-15
30 GHz to 32 GHz	-16	-16	-16	-16	-17	-17
32 GHz to 35 GHz	-14	-14	-15	-15	-16	-16
35 GHz to 40 GHz	-17	-17	-19	-19	-20	-20
40 GHz to 60 GHz	-12	-12	-14	-14	-15	-15
60 GHz to 64 GHz	-12	-12	-15	-15	-17	-17
64 GHz to 67 GHz	-12	-12	-14	-14	-16	-16
67 GHz to 70 GHz	-21	-21	-22	-22	--	--

[1] In Filtered Mode, the signal path goes through filters to minimize harmonics below 3.2 GHz. In Hi Power Mode, the signal bypasses the filters to maximize output power.

Table 40b. Reference Receiver Inputs and Reference Source Outputs (dBm) - Typical

(RCVR R2, R3, R4 IN, REF 2, 3, 4 SOURCE OUT) @ Max Specified Output Power

Description	Option 400		Options 200, 400	Option 419		Options 219, 419
	RCVR R3 IN, REF 3 SOURCE OUT	RCVR R3 IN, REF 3 SOURCE OUT	RCVR R2, R4 IN, REF 2, 3 SOURCE OUT	RCVR R3 IN, REF 3 SOURCE OUT	RCVR R3 IN, REF 3 SOURCE OUT	RCVR R2, R4 IN, REF 2, 3 SOURCE OUT
	Filtered Mode[1]	Hi Power Mode[1]		Filtered Mode[1]	Hi Power Mode[1]	
10 MHz to 50 MHz	-31	-23	-27	-31	-26	-25
50 MHz to 500 MHz	-19	-14	-14	-18	-13	-14
500 MHz to 1 GHz	-9	-4	-4	-9	-4	-4
1 GHz to 2 GHz	-6	-1	-1	-6	-1	-1
2 GHz to 3.2 GHz	-5	-5	-1	-6	-6	-1
3.2 GHz to 10 GHz	-2	-2	-2	-3	-3	-2
10 GHz to 16 GHz	-4	-4	-4	-5	-5	-5
16 GHz to 26.5 GHz	-5	-5	-5	-6	-6	-6
26.5 GHz to 30 GHz	-5	-5	-5	-7	-7	-7
30 GHz to 32 GHz	-9	-9	-9	-9	-9	-9
32 GHz to 35 GHz	-6	-6	-6	-7	-7	-8
35 GHz to 40 GHz	-10	-10	-10	-11	-11	-12
40 GHz to 50 GHz	-4	-4	-4	-5	-5	-6
50 GHz to 60 GHz	-3	-3	-3	-5	-5	-6
60 GHz to 64 GHz	-2	-2	-2	-4	-4	-6
64 GHz to 67 GHz	-1	-1	-1	-3	-3	-5
67 GHz to 70 GHz	-2	-2	-2	-6	-6	-8

[1] In Filtered Mode, the signal path goes through filters to minimize harmonics below 3.2 GHz. In Hi Power Mode, the signal bypasses the filters to maximize output power.

Table 40c. Reference Receiver Inputs and Reference Source Outputs (dBm) - Typical

(RCVR R2, R3, R4 IN, REF 2, 3, 4 SOURCE OUT) @ Max Specified Output Power

Description	Option 423		Options 224, 423
	RCVR R3 IN, REF 3 SOURCE OUT	RCVR R3 IN, REF 3 SOURCE OUT	RCVR R2, R4 IN, REF 2, 4 SOURCE OUT
	Filtered Mode[1]	Hi Power Mode[1]	
10 MHz to 50 MHz	-31	-25	-29
50 MHz to 500 MHz	-18	-13	-16
500 MHz to 1 GHz	-11	-5	-4
1 GHz to 2 GHz	-7	-1	-1
2 GHz to 3.2 GHz	-6	-6	-1
3.2 GHz to 10 GHz	-3	-3	-2
10 GHz to 16 GHz	-5	-5	-6
16 GHz to 26.5 GHz	-7	-7	-7
26.5 GHz to 30 GHz	-7	-7	-8
30 GHz to 32 GHz	-9	-9	-10
32 GHz to 35 GHz	-8	-8	-9
35 GHz to 40 GHz	-12	-12	-13
40 GHz to 60 GHz	-6	-6	-7
60 GHz to 64 GHz	-7	-7	-9
64 GHz to 67 GHz	-5	-5	-7

[1] In Filtered Mode, the signal path goes through filters to minimize harmonics below 3.2 GHz. In Hi Power Mode, the signal bypasses the filters to maximize output power.

Table 41a. Source Outputs (dBm) – Typical

(PORT 1, 2, 3, 4 SOURCE OUT) @ Max Specified Output Power

Description	Options 200, 400			Options 219, 419		
	PORT 1, 3 SOURCE OUT		PORT 2, 4 SOURCE OUT	PORT 1, 3 SOURCE OUT		PORT 2, 4 SOURCE OUT
	Filtered Mode[1]	Hi Power Mode[1]		Filtered Mode[1]	Hi Power Mode[1]	
10 MHz to 50 MHz	4	12	12	4	12	12
50 MHz to 1 GHz	8	13	13	8	13	13
1 GHz to 2 GHz	8	13	13	9	14	14
2 GHz to 3.2 GHz	10	10	13	10	10	14
3.2 GHz to 10 GHz	13	13	13	12	12	13
10 GHz to 16 GHz	12	12	12	11	11	11
16 GHz to 26.5 GHz	12	12	12	10	10	10
26.5 GHz to 30 GHz	11	11	11	10	10	10
30 GHz to 32 GHz	8	8	8	7	7	7
32 GHz to 35 GHz	10	10	10	8	8	8
35 GHz to 40 GHz	6	6	6	3	3	3
40 GHz to 50 GHz	11	11	11	9	9	9
50 GHz to 70 GHz	12	12	12	8	8	8

[1] In Filtered Mode, the signal path goes through filters to minimize harmonics below 3.2 GHz. In Hi Power Mode, the signal bypasses the filters to maximize output power.

Table 41b. Source Outputs (dBm) - Typical

(PORT 1, 2, 3, 4 SOURCE OUT) @ Max Specified Output Power

Description	Options 224, 423, 029		
	PORT 1, 3 SOURCE OUT		PORT 2, 4 SOURCE OUT
	Filtered Mode[1]	Hi Power Mode[1]	
10 MHz to 50 MHz	4	11	11
50 MHz to 1 GHz	7	13	13
1 GHz to 2 GHz	8	14	14
2 GHz to 3.2 GHz	10	10	14
3.2 GHz to 10 GHz	12	12	13
10 GHz to 16 GHz	10	10	10
16 GHz to 30 GHz	9	9	9
30 GHz to 32 GHz	6	6	6
32 GHz to 35 GHz	7	7	7
35 GHz to 40 GHz	2	2	2
40 GHz to 50 GHz	8	8	8
50 GHz to 60 GHz	7	7	7
60 GHz to 67 GHz	6	6	6

[1] In Filtered Mode, the signal path goes through filters to minimize harmonics below 3.2 GHz. In Hi Power Mode, the signal bypasses the filters to maximize output power.

Table 42. Coupler Inputs (dB) - Typical

(PORT 1, 2, 3, 4 CPLR THRU) Insertion Loss of Coupler Thru

Description	Options 200, 400	Options 219, 419, 224, 423	Option 029[1]
	All Ports	All Ports	Ports 1, 2
10 MHz to 50 MHz	-0.2	-0.7	-1.7
50 MHz to 500 MHz	-0.2	-0.3	-1.3
500 MHz-to 1 GHz	-0.3	-0.5	-1.5
1 GHz to 2 GHz	-0.4	-0.7	-1.7
2 GHz to 3.2 GHz	-0.4	-0.8	-1.8
3.2 GHz to 10 GHz	-0.6	-1.3	-2.3
10 GHz to 16 GHz	-0.8	-1.8	-2.8
16 GHz to 26.5 GHz	-1.0	-2.7	-3.7
26.5 GHz to 30 GHz	-1.0	-2.6	-4.1
30 GHz to 35 GHz	-1.2	-2.2	-3.7
35 GHz to 40 GHz	-1.3	-2.4	-3.9
40 GHz to 50 GHz	-1.5	-2.8	-4.3
50 GHz to 60 GHz	-1.7	-3.2	-4.7
60 GHz to 64 GHz	-1.9	-3.7	-4.2
64 GHz to 67 GHz	-2.0	-4.0	-5
67 GHz to 70 GHz	-2.2	-4.5	-5.5

[1] Option 029 affects only port 1 and 2 coupler thru insertion loss. Refer to Options 219, 419, 224, 423 for the coupler thru insertion loss on port 3 or port 4. Port 1 impedance tuner switch is in bypass position and port 2 noise receiver switch is in normal position.

Table 43. Damage Level - Typical

Description	RF (dBm)	DC (V)
RCVR A, B, C, D IN	15	7
RCVR R1, R2, R3, R4 IN	15	7
REF 1SOURCE OUT	15	7
REF 2, 3, 4 SOURCE OUT	30	7
PORT 1, 2, 3, 4 SOURCE OUT	27	5
PORT 1 CPLR THRU	27 (10[1])	40
PORT 2, 3, 4 CPLR THRU	27	40
PORT 1, 2, 3, 4 CPLR ARM	30	7

[1] When the source impedance tuner is switched in the path of Option 224 or 423 with Option 029 configuration, +10 dBm input to port 1 CPLR THRU damages the tuner.

Test Set Block Diagrams

NOTE For best readability, use a color printer for printing the following graphics.

Legend

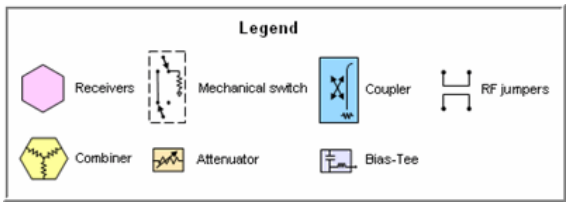

Figure 1. 2-Port N5247A Base Unit Option 200

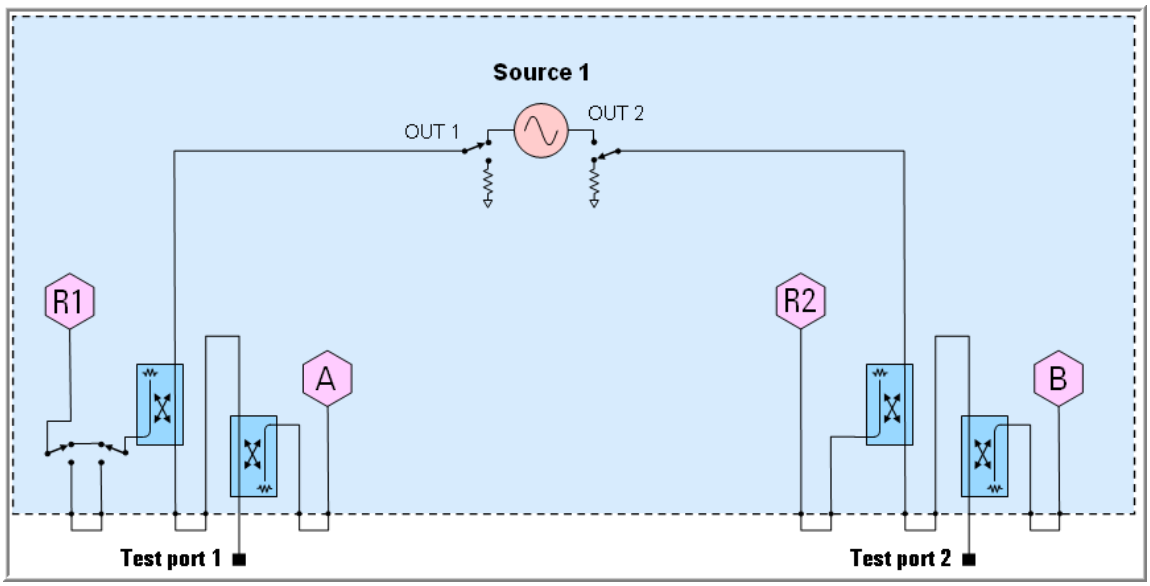

Figure 2. 2-Port N5247A Option 219

Adds Extended power range: source and receiver attenuators, and bias-tees

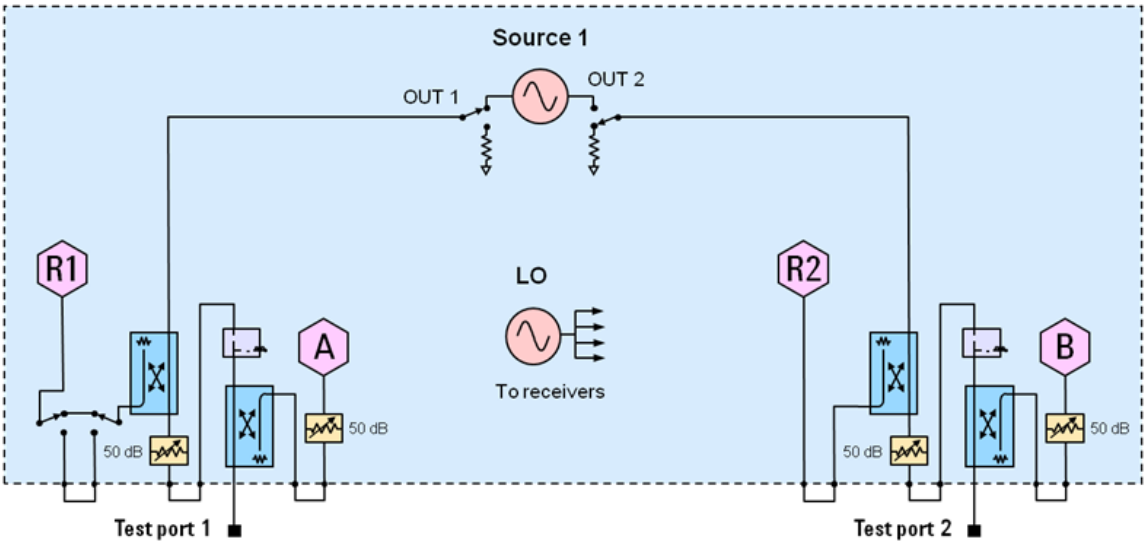

Figure 3. 2-Port N5247A Option 224

Adds internal second source, combiner, and mechanical switches

Also shown, Option 025 adds 4 pulse generators. Option 021 and 022 adds pulse modulators.

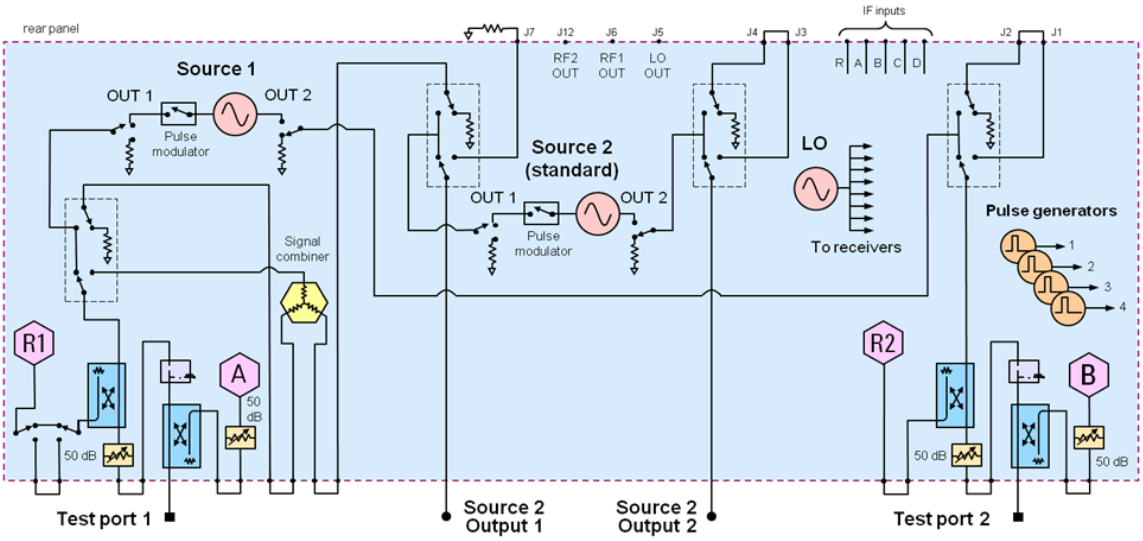

Figure 4. 2-Port N5247A Option 224 with 029

Adds internal second source, combiner, mechanical switches and impedance tuner/noise receiver. Also shown, Option 025 adds 4 pulse generators. Option 021 and 022 adds pulse modulators.

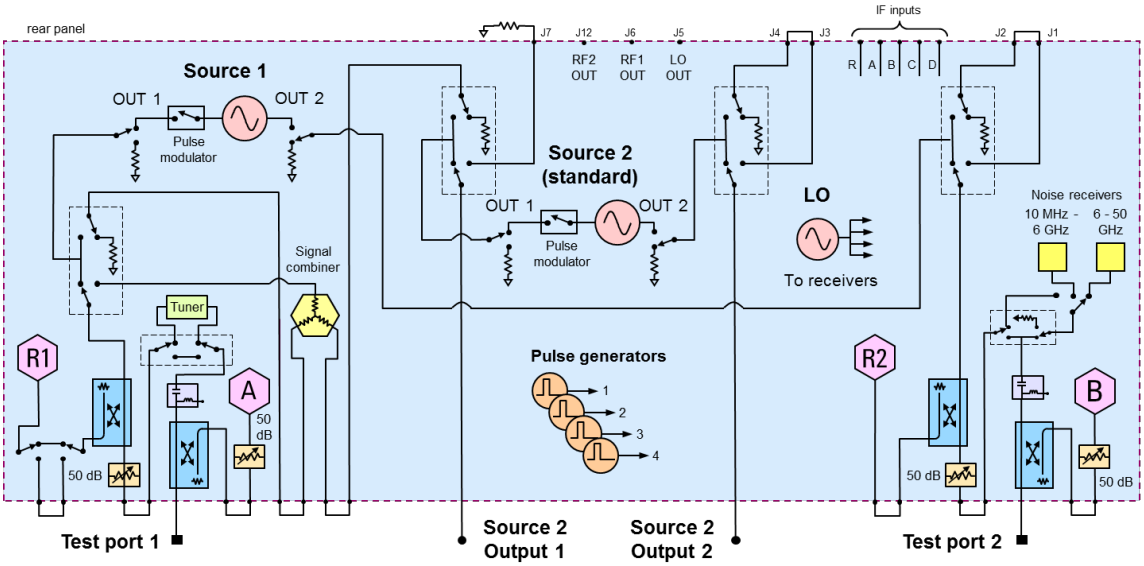

Figure 5. 4-Port N5247A Base Unit Option 400

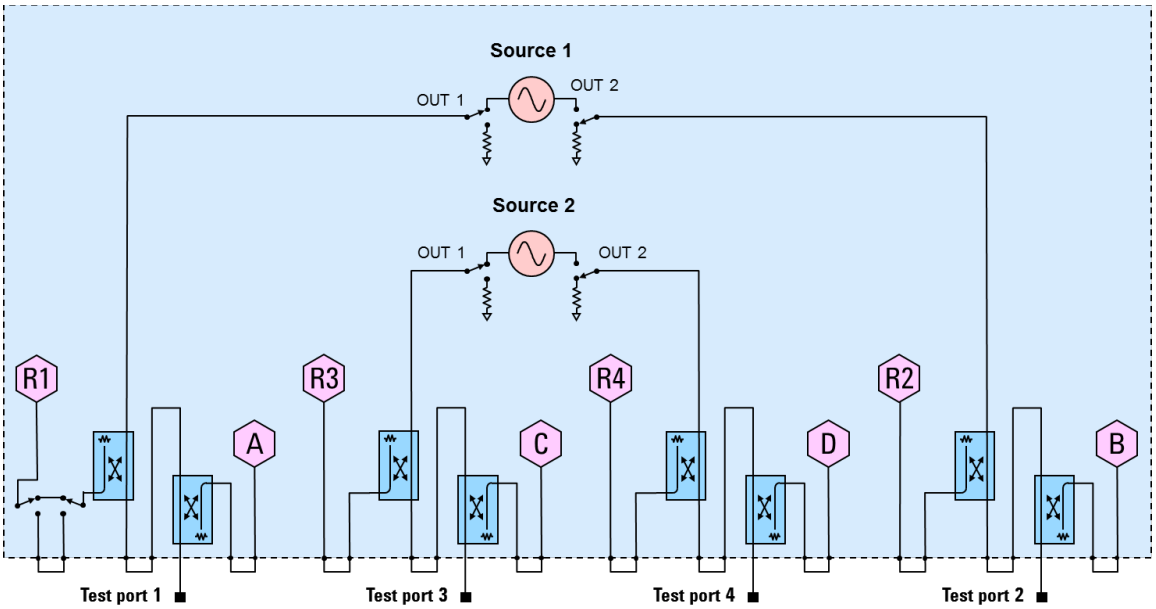

Figure 6. 4-Port N5247A Option 419

Adds Extended power range: source and receiver attenuators, and bias-tees.

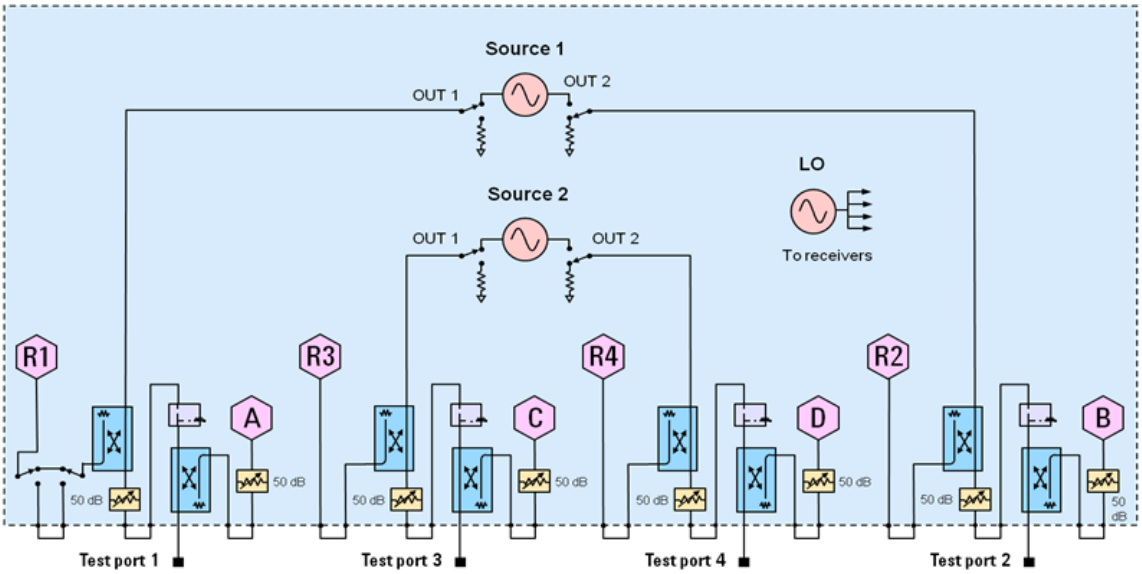

Figure 7. 4-Port N5247A Option 423

Adds internal combiner and mechanical switches.

Also shown, Option 025 adds 4 pulse generators. Option 021 and 022 adds pulse modulators.

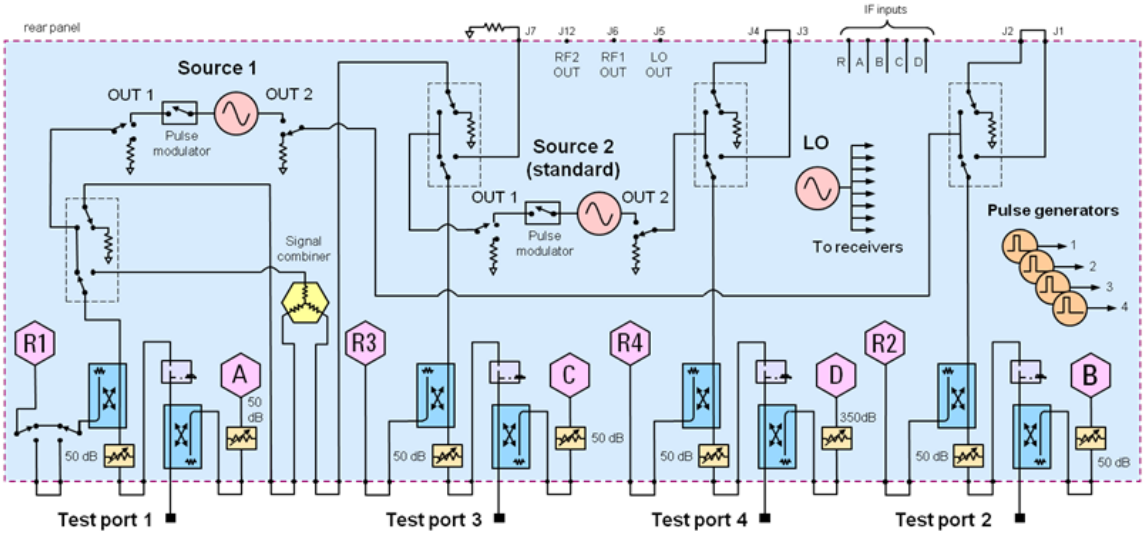

Figure 8. 4-Port N5247A Option 423 with 029

Adds internal combiner, mechanical switches and impedance tuner/noise receiver.

Also shown, Option 025 adds 4 pulse generators. Option 021 and 022 adds pulse modulators.

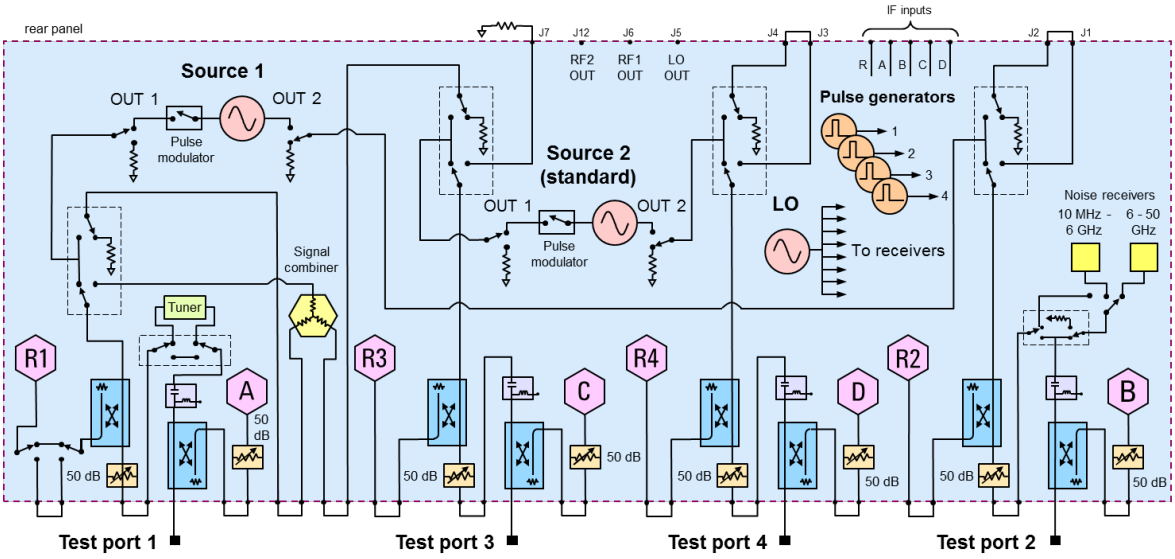

Figure 9. Receiver Block Diagram

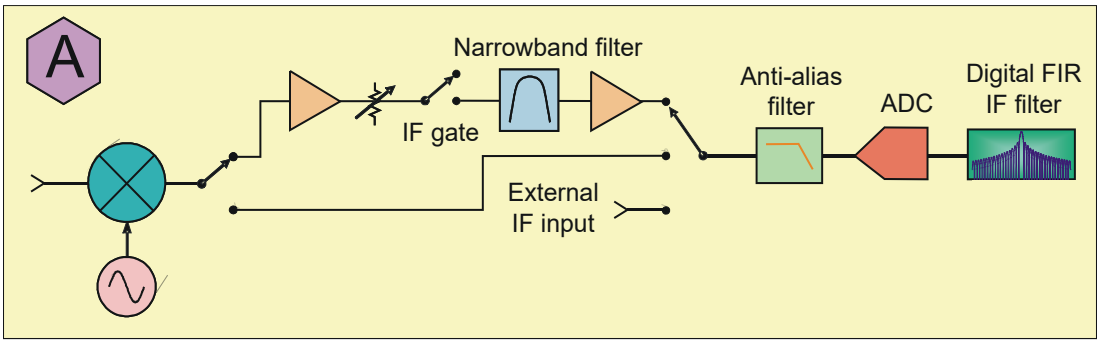

This information is subject to change without notice.
© Keysight Technologies 2014-2025
Print Date: August 6, 2025
N5247-90002
www.keysight.com