Keysight 2-Port and 4-Port PNA-X Network Analyzer

N5249B 900 Hz to 8.5 GHz
N5241B 900 Hz to 13.5 GHz
N5242B 900 Hz to 26.5 GHz

(for synthesizer revision 7)

KEYSIGHT

TECHNICAL SPECIFICATIONS

Documentation Warranty

THE MATERIAL CONTAINED IN THIS DOCUMENT IS PROVIDED "AS IS," AND IS SUBJECT TO BEING CHANGED, WITHOUT NOTICE, IN FUTURE EDITIONS. FURTHER, TO THE MAXIMUM EXTENT PERMITTED BY APPLICABLE LAW, KEYSIGHT DISCLAIMS ALL WARRANTIES, EITHER EXPRESS OR IMPLIED WITH REGARD TO THIS MANUAL AND ANY INFORMATION CONTAINED HEREIN, INCLUDING BUT NOT LIMITED TO THE IMPLIED WARRANTIES OF MERCHANTABILITY AND FITNESS FOR A PARTICULAR PURPOSE. KEYSIGHT SHALL NOT BE LIABLE FOR ERRORS OR FOR INCIDENTAL OR CONSEQUENTIAL DAMAGES IN CONNECTION WITH THE FURNISHING, USE, OR PERFORMANCE OF THIS DOCUMENT OR ANY INFORMATION CONTAINED HEREIN. SHOULD KEYSIGHT AND THE USER HAVE A SEPARATE WRITTEN AGREEMENT WITH WARRANTY TERMS COVERING THE MATERIAL IN THIS DOCUMENT THAT CONFLICT WITH THESE TERMS, THE WARRANTY TERMS IN THE SEPARATE AGREEMENT WILL CONTROL.

U.S. Government Rights

U.S. Government Rights. The Software is “commercial computer software,” as defined by Federal Acquisition Regulation (“FAR”) 2.101. Pursuant to FAR 12.212 and 27.405-3 and Department of Defense FAR Supplement (“DFARS”) 227.7202, the U.S. government acquires commercial computer software under the same terms by which the software is customarily provided to the public. Accordingly, Keysight provides the Software to U.S. government customers under its standard commercial license, which is embodied in its End User License Agreement (EULA), a copy of which can be found at http://www.keysight.com/find/sweula. The license set forth in the EULA represents the exclusive authority by which the U.S. government may use, modify, distribute, or disclose the Software. The EULA and the license set forth therein, does not require or permit, among other things, that Keysight: (1) Furnish technical information related to commercial computer software or commercial computer software documentation that is not customarily provided to the public; or (2) Relinquish to, or otherwise provide, the government rights in excess of these rights customarily provided to the public to use, modify, reproduce, release, perform, display, or disclose commercial computer software or commercial computer software documentation. No additional government requirements beyond those set forth in the EULA shall apply, except to the extent that those terms, rights, or licenses are explicitly required from all providers of commercial computer software pursuant to the FAR and the DFARS and are set forth specifically in writing elsewhere in the EULA. Keysight shall be under no obligation to update, revise or otherwise modify the Software. With respect to any technical data as defined by FAR 2.101, pursuant to FAR 12.211 and 27.404.2 and DFARS 227.7102, the U.S. government acquires no greater than Limited Rights as defined in FAR 27.401 or DFAR 227.7103-5 (c), as applicable in any technical data.

Table of Contents

Documentation Warranty 2
U.S. Government Rights 2
Table 1. Low Frequency Extension (LFE) Options 9
Definitions 10
Dynamic Range 12
System Dynamic Range 13
Table 2. System Dynamic Range at Test Port (dB), Options 201 or 401 13
Table 3. System Dynamic Range at Test Port (dB), Options 21x or 41x 13
Table 4. System Dynamic Range at Test Port (dB), Option 22x 14
Table 5. System Dynamic Range at Test Port (dB), Options 22x, 422, or 423 14
Table 6. System Dynamic Range at Test Port (dB), Options (21x, 22x, 41x, 422, 423) with 029 16
Table 7. System Dynamic Range at Test Port (dB), N5241B and N5242B, Option 205 16
Table 8. System Dynamic Range at Test Port (dB), Option 425 17
Table 9. System Dynamic Range at Test Port (dB), All LFE Options (LFE Enabled) 17
Table 10. System Dynamic Range at Test Port (dB), Option 425 and Option 425 with 029 (LFE Enabled), Combine Mode - Typical 18
Table 11. System Dynamic Range at Test Port (dB), Option 425 with 029 18
Extended Dynamic Range 19
Table 12. Extended Dynamic Range at Direct Receiver Access Input (dB) - Typical 19
Table 13. Extended Dynamic Range at Direct Receiver Access Input (dB) – Typical 19
Table 14. Extended Dynamic Range at Direct Receiver Access Input (dB) - Typical 20
Table 15. Extended Dynamic Range at Direct Receiver Access Input (dB) - Typical 20
Receiver Dynamic Range 21
Table 16. Receiver Dynamic Range (dB), All Options 21
Table 17. Receiver Dynamic Range (dB), All Ports, All LFE Options (LFE Enabled) 21
Corrected System Performance with 3.5mm Connectors, All Options 22
Table 18. 85052B Calibration Kit 22
Transmission Uncertainty 23
Reflection Uncertainty 23
Table 19. 85052B Calibration Kit, Option 425 (LFE Enabled) 24
Transmission Uncertainty, Option 425 24
Reflection Uncertainty, Option 425 24
Table 20. N4691B Calibration Kit 25
Transmission Uncertainty 25
Reflection Uncertainty 25
Table 21. N4691B Calibration Kit, Option 425 with Option 029 (LFE Enabled) 26

Transmission Uncertainty, Option 425 with Option 029 26
Reflection Uncertainty, Option 425 with Option 029 26
Table 22. N4691D Calibration Kit 27
Transmission Uncertainty 27
Reflection Uncertainty 27
Table 23. N4691D Calibration Kit, Option 425 with Option 029 (LFE Enabled) 28
Transmission Uncertainty, Option 425 with Option 029 28
Reflection Uncertainty, Option 425 with Option 029 28
Uncorrected System Performance 29
Table 24. Directivity (dB), Option 2xx, 4xx 29
Table 25. Source Match (dB), Option 2xx, 4xx 30
Table 26. Load Match (dB), Option 2xx, 4xx 30
Table 27. Transmission Tracking, Reflection Tracking, Crosstalk (dB), All Options, All Ports-Typical 31
Table 28. Uncorrected System Performance (dB), All Ports, All LFE Options (LFE Enabled) - Specifications 31
Table 29. Uncorrected System Performance (dB), All Ports, All LFE Options (LFE Enabled)- Typical 31
Test Port Output 32
Table 30. Frequency Information, All Options 32
Table 31. Maximum Leveled Power (dBm), Options 201 or 401 32
Table 32. Maximum Leveled Power (dBm), Options 21x or 41x 33
Table 33. Maximum Leveled Power (dBm), Option 21x or 41x with 029[1] 33
Table 34. Maximum Leveled Power (dBm), Options 22x, 422, or 423 34
Table 35. Maximum Leveled Power (dBm), Options 22x, 422, or 423, Combine Mode - Typical 34
Table 36. Maximum Leveled Power (dBm), Option 22x 35
Table 37. Maximum Leveled Power (dBm), Options 22x, 422, or 423 with 029[1] 35
Table 38. Maximum Leveled Power (dBm), Options 22x or 422, or 423 with 029[1], Combine Mode-Typical 36
Table 39. Maximum Leveled Power (dBm), N5241B and N5242B, Port 1 and 2, Option 205 36
Table 40. Maximum Leveled Power (dBm), Port 1 and 2, Option 425 with 029[1] 37
Table 41. Maximum Leveled Power (dBm), Option 425 37
Table 42. Maximum Leveled Power (dBm), Option 425, Combine Mode - Typical 38
Table 43. Maximum Leveled Power (dBm), Option 425 with 029, Combine Mode - Typical 38
Table 44. Maximum Power (dBm), All Ports, Option 425 (LFE Enabled), Combine Mode - Typical 39
Table 45. Maximum Power (dBm), All Ports – All LFE Options (LFE Enabled) 39
Table 46. Typical Output Power Range of SRC3 on Rear Panel (dBm) - Option XSB[1] 39
Table 47. Power Level Accuracy (dB) at Nominal Power[1], All Options 40
Table 48. Power Level Accuracy (dB), All Ports, All LFE Options (LFE Enabled) 40

Table 49. Power Level Linearity[1] (dB), All Options - Specification 41
Table 50. Power Level Linearity[1] (dB), All Options - Specification 41
Table 51. Power Level Linearity[1] (dB), Option 22x - Specification 41
Table 52. Power Level Linearity[1] (dB), All Ports, All LFE Options (LFE Enabled)..... 42
Table 53. Power Sweep Range (dB), Options 201 or 401 42
Table 54. Power Sweep Range (dB), Options 21x or 41x 42
Table 55. Power Sweep Range (dB), Options 21x, 41x with 029[1] 43
Table 56. Power Sweep Range (dB), Options 22x, 422, or 423 43
Table 57. Power Sweep Range (dB), Option 22x 44
Table 58. Power Sweep Range (dB), Options 22x, 422, or 423 with 029[1] 44
Table 59. Power Sweep Range (dB), Option 205 45
Table 60. Power Sweep Range (dB), Option 425 45
Table 61. Power Sweep Range (dB), Option 425 with 029 46
Table 62. Power Sweep Range (dB) –All LFE Options (LFE Enabled) 46
Table 63. Nominal Power (Preset Power, dBm) 47
Table 64. Power Resolution and Maximum/Minimum Settable Power, All Ports[1] 47
Table 65. 2nd and 3rd Harmonics at Max Specified Power (dBc), All Options - Typical 47
Table 66. 2nd and 3rd Harmonics at Max Specified Power (dBc), All Ports, All LFE Options (LFE Enabled) - Typical 48
Table 67. Non-Harmonic Spurs[1] at Nominal Power (dBc), All Options, All Ports – Typical 48
Tracking Spurs (Linear Frequency Scale) 49
Tracking Spurs (Logarithmic Frequency Scale) 49
Table 68. Phase Noise (dBc/Hz), All Options, with UNY, Port 1, 3, Src2Out1 - Typical 50
Table 69. Phase Noise (dBc/Hz), All Options, with UNY, Port 2, 4, Src2Out2 - Typical 50
Phase Noise with Option UNY 50
Table 70. Phase Noise (dBc/Hz), All LFE Options (LFE Enabled), with UNY, All Ports - Typical 51
Table 71. Phase Noise (dBc/Hz), All Options, without UNY, All Ports - Typical 51
Phase Noise, CW 10 GHz, with Option UNY and without Option UNY 51
Test Port Input 52
Table 72. Noise Floor[1] (dBm) @ 10 Hz IFBW, All Options, All Ports 52
Table 73. Noise Floor (dBm) @ 10 Hz IFBW, All LFE Options (LFE Enabled) 52
Table 74. 0.1 dB Compression, All Options, All Ports - Typical 53
Table 75. 0.1 dB Compression, All Ports, All LFE Options (LFE Enabled) - Typical 53
Table 76. Compression (dB) at 8 dBm Test Port Power, All Options, All Ports 53
Table 77. Compression, All Ports, All LFE Options (LFE Enabled)- Specification 54
Table 78. Trace Noise[1] Magnitude (dB rms), All Options, All Ports 54
Table 79. Trace Noise[1] Magnitude (dB rms), All Ports, All LFE Options (LFE Enabled) 55
Table 80. Trace Noise[1] Phase (deg rms), All Options, All Ports 55

Table 81. Trace Noise[1] Phase (deg rms), All Ports, All LFE Options (LFE Enabled) 55
Table 82. Reference Level - Specification 56
Table 83. Stability[1], All Options - Typical 56
Table 84. Stability[1], Option 425 (LFE Enabled) - Typical 56
Table 85. Damage Input Level, All Options - Specification 57
Noise Receiver Input (Option 029 only) 58
Table 86. Noise Receiver Bandwidth 58
Table 87. Receiver Noise Figure (dB), Port 2, at 4 MHz BW, High Gain Setting 58
Table 88. Receiver Noise Figure (dB), Port 2, at 4 MHz BW, High Gain Setting, Option 425 58
Table 89. Noise Figure Trace Noise[1] (dB rms) at 4 MHz BW 59
Table 90. Noise Receiver Linearity (dB) at 4 MHz BW - Specification 59
Table 91. Noise Receiver Input Range - Specification 59
Phase Noise Measurement Performance (with S930317B phase noise measurement application) 60
Table 92. Absolute Phase Noise Sensitivity (dBc/Hz), in Best mode - Supplemental Performance Data 60
Table 93. Absolute AM Noise Sensitivity (dBc/Hz), in Best mode - Supplemental Performance Data 60
Absolute Phase Noise Sensitivity (dBc/Hz) - Supplemental Performance Data 61
Single-Channel Residual Noise Measurement 62
Table 94. Single-Channel Residual Phase Noise Sensitivity (dBc/Hz), with Option UNY in Best mode - Supplemental Performance Data 62
Table 95. Single-Channel Residual AM Noise Sensitivity (dBc/Hz), with Option UNY in Best mode - Supplemental Performance Data 62
Single-Channel Residual Phase Noise Sensitivity (dBc/Hz) - Supplemental Performance Data 63
Table 96. Single-Channel Residual Phase Noise Sensitivity (dBc/Hz), without Option UNY in Best mode - Supplemental Performance Data 64
Table 97. Single-Channel Residual AM Noise Sensitivity (dBc/Hz), without Option UNY in Best mode - Supplemental Performance Data 64
2-Channel Residual Noise Measurement for Non-Frequency Converting Devices 65
Table 98. 2-Channel Residual Phase Noise Sensitivity (dBc/Hz) in Best mode - Supplemental Performance Data 65
Table 99. 2-Channel Residual AM Noise Sensitivity (dBc/Hz) in Best mode - Supplemental Performance Data 65
2-Channel Residual Phase Noise Sensitivity (dBc/Hz) - Supplemental Performance Data 66
Dynamic Accuracy 67
Table 100. Dynamic Accuracy - Specification 67
Dynamic Accuracy, 900 Hz, All LFE Options (LFE Enabled) - Specification 67
Dynamic Accuracy, 10 MHz, All LFE Options (LFE Enabled) - Specification 67
Dynamic Accuracy, 100 MHz, All LFE Options (LFE Enabled) - Specification 68
Dynamic Accuracy, 10 MHz 68

Dynamic Accuracy, 50 MHz 68
Dynamic Accuracy, 1 GHz 69
Dynamic Accuracy, 8.5 GHz 69
Dynamic Accuracy, 10 GHz 69
Dynamic Accuracy, 13.5 GHz 70
Dynamic Accuracy, 20 GHz 70
Dynamic Accuracy, 26.5 GHz 70
Table 101. Test Port Input (Group Delay)[1] 71
General Information 72
Table 102. Miscellaneous Information 72
Table 103. Front Panel Information, All Options 72
Table 104. Rear Panel Information, All Options 73
Table 105. Analyzer Dimensions and Weight 76
Regulatory and Environmental Information 77
Measurement Throughput Summary 78
Table 106. Cycle Time (ms) for Measurement Completion, All Models, All Options - Typical 78
Table 107. N5241B Cycle Time (ms) for Full-Span Measurement Completion - Typical 79
Table 108. N5242B Cycle Time (ms) for Full-Span Measurement Completion - Typical 79
Table 109. N5249B Cycle Time (ms) for Full-Span Measurement Completion - Typical 79
Table 110. Cycle Time vs. IF Bandwidth - Typical 80
Table 111. Cycle Time (ms) vs. Number of Points - Typical 81
Table 112. Data Transfer Time[1] (ms) - Typical 82
Table 113. Typical Cycle Time for Amplifier Noise Figure Measurement (Option 029 and S93029B) 83
Table 114. Typical Cycle Time for Amplifier Gain Compression Measurement (Option S93086B) 83
Table 115. Typical Cycle Time for Amplifier Swept Intermodulation Distortion Measurement (Option S93087B) 84
Table 116. Typical Cycle Time for Converter Noise Figure Measurement (Option 029 and S93029B) 84
Table 117. Typical Cycle Time for Converter Measurement with SMC + Phase (Option S93083B) 85
Table 118. Typical Cycle Time for Converter Gain Compression Measurement (Option S93086B) 85
Table 119. Typical Cycle Time for Converter Swept Intermodulation Distortion Measurement (Option S93087B) 86
Front-Panel Jumpers 87
Table 120. Measurement Receiver Inputs (dBm) - Typical 87
Table 121. Reference Receiver Inputs and Reference Source Outputs (dBm) - Typical 88
Table 122. Reference Receiver Inputs and Reference Source Outputs (dBm) - Typical 88
Table 123. Reference Receiver Inputs and Reference Source Outputs (dBm) - Typical 89
Table 124. Source Outputs (dBm) - Typical 89

Table 125. Source Outputs (dBm) - Typical 90
Table 126. Coupler Inputs (dB) - Typical 90
Table 127. Damage Level - Typical 91
Test Set Block Diagrams 92

This is a complete list of the technical specifications for the N5241B, N5242B, and N5249B with the following options (see block diagrams at the end of this document):

Option 029, adds hardware and firmware for high-accuracy noise figure measurements. It requires option 21x, 22x, 41x, or 42x.

Option 201, 2-port standard test set (includes six front-panel access loops) and power range.

Option 217, 2-port standard test set (includes six front-panel access loops), power range, and source and receiver attenuators (extended power range).

Option 219, 2-port standard test set (includes six front-panel access loops), power range, source and receiver attenuators (extended power range), and bias-tees.

Option 222, 2-port standard test set (includes six front-panel access loops), power range, source and receiver attenuators (extended power range), internal second source, a combiner, and mechanical switches to the 2-port analyzer.

Option 224, 2-port standard test set (includes six front-panel access loops), power range, source and receiver attenuators (extended power range), internal second source, a combiner, mechanical switches to the 2-port analyzer, and bias tees.

Option 401, 4-port standard test set (includes twelve front-panel access loops), power range, and an internal second source (Option 080 recommended).

Option 417, 4-port standard test set (includes twelve front-panel access loops), power range, internal second source (Option 080 recommended), and source and receiver attenuators (extended power range).

Option 419, 4-port standard test set (includes twelve front-panel access loops), power range, internal second source (Option 080 recommended), and source and receiver attenuators (extended power range), and bias-tees.

Option 422, 4-port standard test set (includes six front-panel access loops), power range, source and receiver attenuators (extended power range), internal second source, a combiner, and mechanical switches to the 4-port analyzer.

Option 423, 4-port standard test set (includes six front-panel access loops), power range, source and receiver attenuators (extended power range), internal second source, a combiner, mechanical switches to the 4-port analyzer, and bias tees.

Table 1. Low Frequency Extension (LFE) Options

Option	Description
2-Port Model	
205	2-port standard test set (includes six front-panel access loops), R1 receiver switch, power range, and low frequency extension (LFE) hardware.
4-Port Model	
425	4-port standard test set (includes six front-panel access loops), power range, source and receiver attenuators (extended power range), internal second source, a combiner, mechanical switches to the 4-port analyzer, bias tees, and low frequency extension (LFE) hardware.

Notes

The Corrected System Performance with Cal Kits and Dynamic Accuracy Charts apply ONLY to the N5241B, N5242B, and N5249B models with serial numbers starting with MY5241/42/49, SG5241/42/49, and US5241/42/49, and above. This document provides technical specifications only for the 85052B calibration kit, the N4433A 4-Port ECal module, and the N4691B 2-Port ECal module. Please download our free Uncertainty Calculator from http://www.keysight.com/find/na_calculator to generate the curves for your calibration kit and PNA setup.

For all tables in this document, the specified performance at the exact frequency of a break is the degraded value of the two specifications at that frequency.

Definitions

All specifications and characteristics apply over a 25 °C ±5 °C range (unless otherwise stated) and 90 minutes after the instrument has been turned on.

Specification (spec.): Warranted performance. Specifications include guardbands to account for the expected statistical performance distribution, measurement uncertainties, and changes in performance due to environmental conditions.

Characteristic (char.): A performance parameter that the product is expected to meet before it leaves the factory, but that is not verified in the field and is not covered by the product warranty. A characteristic includes the same guardbands as a specification.

Typical (typ.): Expected performance of an average unit which does not include guardbands. It is not covered by the product warranty.

Nominal (nom.): A general, descriptive term that does not imply a level of performance. It is not covered by the product warranty.

Supplemental performance data (SPD): A performance parameter that is tested on a minimal set of products during design validation. It does not include guardbands, and is not covered by the product warranty.

Calibration: The process of measuring known standards to characterize a network analyzer's systematic (repeatable) errors.

Corrected (residual): Indicates performance after error correction (calibration). It is determined by the quality of calibration standards and how well "known" they are, plus system repeatability, stability, and noise.

Uncorrected (raw): Indicates instrument performance without error correction. The uncorrected performance affects the stability of a calibration.

Standard: When referring to the analyzer, this includes no options unless noted otherwise.

Standard and LFE measurements: With an LFE option, which adds low frequency extension (LFE) hardware, the LFE measurement range overlaps with the standard measurement range from 10 MHz to 100 MHz. With LFE Enabled, measurements from 500 Hz to 100 MHz use LFE hardware. With LFE Disabled, measurements from 10 MHz to 100 MHz use standard hardware. To measure below 10 MHz, LFE must be enabled. All measurements above 100 MHz use standard hardware, regardless of the LFE Enabled/Disabled setting.

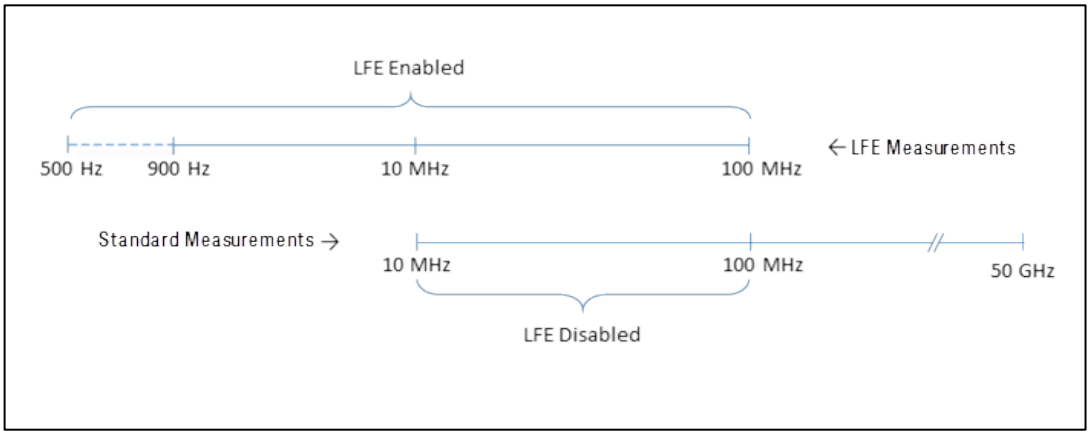

Dynamic Range

The specifications in this section apply for measurements made with the N5241B, N5242B, and N5249B analyzer with the following conditions:

- 10 Hz IF bandwidth
- No averaging applied to data
- Isolation calibration with an averaging factor of 8
- Source in filtered mode where applicable

System Dynamic Range is defined as the measured source maximum output power (A) minus the measured noise floor (B).

Extended Dynamic Range at Direct Access Input is defined as the system dynamic range (typical) less the nominal loss associated with the test port coupler.

Receiver Dynamic Range is defined as the typical test port 0.1 dB compression (C) minus the typical noise floor (D).

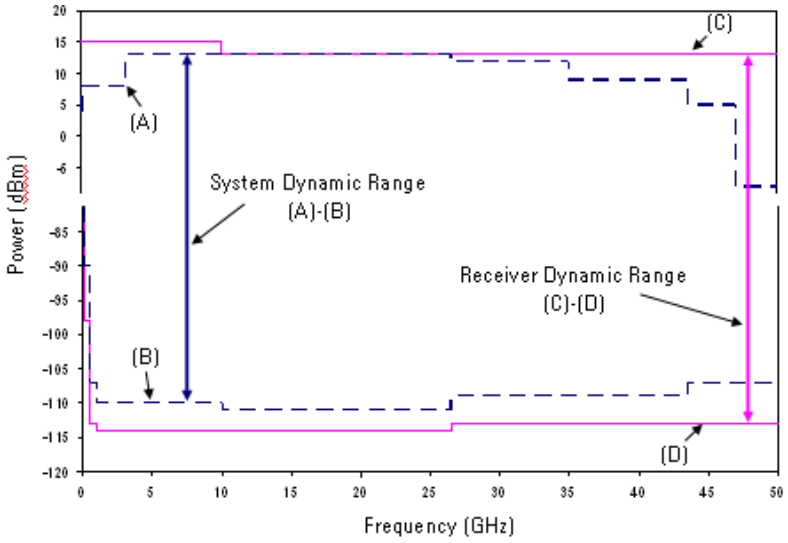

System Dynamic Range

Table 2. System Dynamic Range at Test Port (dB), Options 201 or 401

Description	Specification[3]		Typical	
	Ports[1, 2] 1, 3	Ports[1] 2, 4	Ports[1, 2] 1, 3	Ports[1] 2, 4
10 MHz to 50 MHz	104	103	110	110
50 MHz to 100 MHz	119	120	126	127
100 MHz to 500 MHz	126	127	137	138
500 MHz to 2 GHz	132	134	140	143
2 GHz to 3.2 GHz	129	132	137	141
3.2 GHz to 8.5 GHz	133	132	141	141
8.5 GHz to 10 GHz	134	134	142	141
10 GHz to 13.5 GHz	133	133	141	140
13.5 GHz to 16 GHz	132	131	140	139
16 GHz to 20 GHz	130	129	138	136
20 GHz to 24 GHz	128	126	137	135
24 GHz to 26.5 GHz	122	121	135	132

[1] Either port can be used as the source port. Any other port can be used as the receiver port.
[2] System Dynamic Range measured in High Power Mode.
[3] Specification Applies to new instruments. Test limit during recertification is defined by Maximum Leveled Power – Noise Floor.

Table 3. System Dynamic Range at Test Port (dB), Options 21x or 41x

Description	Specification[3]		Typical (dB)	
	Ports[1, 2] 1, 3	Ports[1] 2, 4	Ports[1, 2] 1, 3	Ports[1] 2, 4
10 MHz to 50 MHz	102	102	109	109
50 MHz to 100 MHz	119	120	126	127
100 MHz to 500 MHz	126	131	137	138
500 MHz to 2 GHz	132	135	140	142
2 GHz to 3.2 GHz	128	134	137	141
3.2 GHz to 8.5 GHz	132	133	141	141
8.5 GHz to 10 GHz	132	133	141	140
10 GHz to 13.5 GHz	131	132	141	140
13.5 GHz to 16 GHz	131	132	139	139
16 GHz to 20 GHz	129	130	137	137
20 GHz to 24 GHz	128	126	138	134
24 GHz to 26.5 GHz	117	116	130	128

[1] Either port can be used as the source port. Any other port can be used as the receiver port.
[2] System Dynamic Range measured in High Power Mode.
[3] Specification Applies to new instruments. Test limit during recertification is defined by Maximum Leveled Power – Noise Floor.

Table 4. System Dynamic Range at Test Port (dB), Option 22x

Description	Specification[2]		Typical (dB)	
	Source 2 Out 1[1]	Source 2 Out 2	Source 2 Out 1[1]	Source 2 Out 2
10 MHz to 50 MHz	106	103	112	112
50 MHz to 100 MHz	123	123	129	130
100 MHz to 500 MHz	129	130	139	140
500 MHz to 2 GHz	134	138	143	145
2 GHz to 3.2 GHz	132	134	140	143
3.2 GHz to 8.5 GHz	135	135	144	144
8.5 GHz to 10 GHz	136	135	145	144
10 GHz to 13.5 GHz	136	134	145	144
13.5 GHz to 16 GHz	137	136	144	144
16 GHz to 20 GHz	135	136	143	143
20 GHz to 24 GHz	133	133	143	141
24 GHz to 26.5 GHz	126	124	138	136

[1] System Dynamic Range measured in High Power Mode.
[2] Specification Applies to new instruments. Test limit during recertification is defined by Maximum Leveled Power – Noise Floor.

Table 5. System Dynamic Range at Test Port (dB), Options 22x, 422, or 423

Description	Specification[3]		Typical			
	Ports[1, 2] 1, 3	Ports[1] 2, 4	Ports[1, 2] 1, 3	Ports[1] 2, 4	Source 1 Port 1 Combine Mode	Source 2 Port 1 Combine Mode
10 MHz to 50 MHz	104	102	110	109	102	78
50 MHz to 100 MHz	120	120	127	127	112	90
100 MHz to 500 MHz	127	127	137	138	121	99
500 MHz to 2 GHz	133	135	140	142	127	112
2 GHz to 3.2 GHz	131	134	138	141	132	119
3.2 GHz to 8.5 GHz	130	133	138	141	132	119
8.5 GHz to 10 GHz	134	132	141	140	132	119
10 GHz to 13.5 GHz	134	132	141	140	128	115
13.5 GHz to 16 GHz	132	131	139	138	128	115
16 GHz to 20 GHz	130	129	137	136	125	113
20 GHz to 24 GHz	128	125	137	133	121	109
24 GHz to 26.5 GHz	119	116	130	127	115	102

[1] Either port can be used as the source port. Any other port can be used as the receiver port.
[2] System Dynamic Range measured in High Power Mode.
[3] Specification Applies to new instruments. Test limit during recertification is defined by Maximum Leveled Power – Noise Floor.

Table 6. System Dynamic Range at Test Port (dB), Options (21x, 22x, 41x, 422, 423) with 029

Description	Specification[2]		Typical			
	Port 1 [1]	Port 2	Port 1 [1]	Port 2	Source 1 Port 1 Combine Mode	Source 2 Port 1 Combine Mode
10 MHz to 50 MHz	104	101	110	109	101	87
50 MHz to 100 MHz	120	120	127	127	112	99
100 MHz to 500 MHz	127	126	137	138	127	114
500 MHz to 2 GHz	134	136	140	142	127	113
2GHz to 3.2 GHz	130	134	137	141	127	113
3.2 GHz to 8.5 GHz	130	132	140	141	132	119
8.5 GHz to 10 GHz	131	131	141	140	132	119
10 GHz to 13.5 GHz	132	131	141	140	128	115
13.5 GHz to 16 GHz	131	130	139	138	128	115
16 GHz to 20 GHz	129	128	137	136	125	113
20 GHz to 24 GHz	128	124	137	133	120	108
24 GHz to 26.5 GHz	118	115	130	127	113	102

[1] System Dynamic Range measured in High Power Mode.
[2] Specification Applies to new instruments. Test limit during recertification is defined by Maximum Leveled Power – Noise Floor.

Table 7. System Dynamic Range at Test Port (dB), N5241B and N5242B, Option 205

Description	Specification[3]		Typical	
	Ports [1, 2] 1, 3	Ports[1] 2, 4	Ports [1, 2] 1, 3	Ports[1] 2, 4
10 MHz to 50 MHz[1]	97	96	103	103
50 MHz to 100 MHz[1]	112	116	122	123
100 MHz to 500 MHz	119	123	133	134
500 MHz to 2 GHz	129	131	137	140
2 GHz to 3.2 GHz	126	129	134	138
3.2 GHz to 8.5 GHz	131	130	139	139
8.5 GHz to 10 GHz	132	132	140	139
10 GHz to 13.5 GHz	131	131	139	138
13.5 GHz to 16 GHz	130	129	138	137
16 GHz to 20 GHz	128	127	136	134
20 GHz to 24 GHz	126	124	135	133
24 GHz to 26.5 GHz	120	119	133	130

[1] With Option 205 installed and LFE disabled, applied to frequencies ≤ 100 MHz. Above 100 MHz, performance is the same for both LFE enabled or disabled.
[2] Either port can be used as the source port. Any other port can be used as the receiver port.
[3] **Specification Applies to new instruments. Test limit during recertification is defined by Maximum Leveled Power – Noise Floor**

Table 8. System Dynamic Range at Test Port (dB), Option 425

Description	Specification[3]		Typical			
	Ports[2] 1, 3	Ports 2, 4	Ports[2] 1, 3	Ports 2, 4	Source 1 Port 1 Combine Mode	Source 2 Port 1 Combine Mode
10 MHz to 50 MHz[1]	96	93	103	102	95	81
50 MHz to 100 MHz[1]	117	116	123	124	107	94
100 MHz to 500 MHz	124	123	133	134	122	109
500 MHz to 2 GHz	133	133	139	140	122	108
2 GHz to 3.2 GHz	130	131	137	140	122	108
3.2 GHz to 8.5 GHz	130	131	139	139	130	117
8.5 GHz to 10 GHz	130	130	139	138	130	117
10 GHz to 13.5 GHz	130	129	139	138	126	113
13.5 GHz to 16 GHz	129	128	137	136	126	113
16 GHz to 20 GHz	128	127	136	135	123	111
20 GHz to 24 GHz	127	122	136	132	119	107
24 GHz to 26.5 GHz	118	114	130	127	113	100

[1] With Option 425 installed and LFE disabled, applied to frequencies ≤ 100 MHz. Above 100 MHz, performance is the same for both LFE enabled or disabled. For LFE enabled performance ≤ 100 MHz, see Table 9.
[2] System Dynamic Range measured in High Power Mode.
[3] Specification Applies to new instruments. Test limit during recertification is defined by Maximum Leveled Power – Noise Floor.

Table 9. System Dynamic Range at Test Port (dB), All LFE Options (LFE Enabled)

Description	Specification[1]		Typical	
	Ports 1, 3	Ports 2, 4	Ports 1, 3	Ports 2, 4
500 Hz to 900 Hz	--	--	105	105
900 Hz to 1 kHz	100	102	109	110
1 kHz to 10 kHz	103	105	110	111
10 kHz to 100 kHz	113	115	120	121
100 kHz to 1 MHz	120	121	124	125
1 MHz to 5 MHz	121	122	126	127
5 MHz to 10 MHz	112	114	118	119
10 MHz to 50 MHz	110	112	116	117
50 MHz to 100 MHz	110	112	116	117

[1] Specification Applies to new instruments. Test limit during recertification is defined by Maximum Leveled Power – Noise Floor.

Table 10. System Dynamic Range at Test Port (dB), Option 425 and Option 425 with 029 (LFE Enabled), Combine Mode - Typical

Description	Source 1 Port 1	Source 2 Port 1
500 Hz to 900 Hz	99	98
900 Hz to 1 kHz	103	102
1 kHz to 10 kHz	104	103
10 kHz to 100 kHz	104	103
100 kHz to 1 MHz	118	118
1 MHz to 5 MHz	119	119
5 MHz to 10 MHz	111	110
10 MHz to 50 MHz	111	110
50 MHz to 100 MHz	111	110

Table 11. System Dynamic Range at Test Port (dB), Option 425 with 029

Description	Specification[3]		Typical			
	Port[2] 1	Port 2	Port[2,] 1	Port 2	Source 1 Port 1 Combine Mode	Source 2 Port 1 Combine Mode
10 MHz to 50 MHz[1]	95	95	103	103	94	80
50 MHz to 100 MHz[1]	116	117	123	124	107	94
100 MHz to 500 MHz	123	124	133	135	122	109
500 MHz to 2 GHz	132	134	139	141	122	108
2 GHz to 3.2 GHz	127	132	136	141	122	108
3.2 GHz to 8.5 GHz	126	128	137	138	130	117
8.5 GHz to 10 GHz	126	128	138	138	130	117
10 GHz to 13.5 GHz	128	128	138	137	126	113
13.5 GHz to 16 GHz	130	127	138	136	126	113
16 GHz to 20 GHz	128	126	136	134	123	111
20 GHz to 24 GHz	126	122	136	131	118	106
24 GHz to 26.5 GHz	115	113	128	126	111	100

[1] With Option 425 installed and LFE disabled, applied to frequencies ≤ 100 MHz. Above 100 MHz, performance is the same for both LFE enabled or disabled.
[2] System Dynamic Range measured in High Power Mode.
[3] Specification Applies to new instruments. Test limit during recertification is defined by Maximum Leveled Power – Noise Floor.

Extended Dynamic Range

Table 12. Extended Dynamic Range at Direct Receiver Access Input (dB) - Typical

Description	Options 201, 401		Options 21x, 41x	
	Ports[1] 1, 3	Ports[1] 2, 4	Ports[1] 1, 3	Ports[1] 2, 4
10 MHz to 50 MHz	154	154	153	153
50 MHz to 100 MHz	152	153	152	153
100 MHz to 500 MHz	157	158	157	158
500 MHz to 2 GHz	155	158	155	157
2 GHz to 3.2 GHz	152	156	152	156
3.2 GHz to 8.5 GHz	156	156	156	156
8.5 GHz to 10 GHz	157	156	156	155
10 GHz to 13.5 GHz	156	155	156	155
13.5 GHz to 16 GHz	155	154	154	154
16 GHz to 20 GHz	153	151	152	152
20 GHz to 24 GHz	152	150	153	149
24 GHz to 26.5 GHz	150	147	145	143

[1]Either port can be used as the source port. Any other port can be used as the receiver port.

Table 13. Extended Dynamic Range at Direct Receiver Access Input (dB) – Typical

Description	Options 22x		Options 22x or 42x	
	Source 2 Out 1	Source2 Out 2	Source 1 Port 1 Combine Mode	Source 2 Port 1 Combine Mode
10 MHz to 50 MHz	156	156	137	113
50 MHz to 100 MHz	155	156	124	102
100 MHz to 500 MHz	159	160	133	111
500 MHz to 2 GHz	158	160	139	124
2 GHz to 3.2 GHz	155	158	139	124
3.2 GHz to 8.5 GHz	159	159	144	131
8.5 GHz to 10 GHz	160	159	144	131
10 GHz to 13.5 GHz	160	159	140	127
13.5 GHz to 16 GHz	159	159	140	127
16 GHz to 20 GHz	158	158	137	125
20 GHz to 24 GHz	158	156	133	121
24 GHz to 26.5 GHz	153	151	127	114

Table 14. Extended Dynamic Range at Direct Receiver Access Input (dB) - Typical

Description	Options 22x, 422, 423		Options 423, 029	
	Ports[1] 1, 3	Ports[1] 2, 4	Port 1	Port 2
10 MHz to 50 MHz	154	153	154	153
50 MHz to 100 MHz	153	153	153	153
100 MHz to 500 MHz	157	158	157	158
500 MHz to 2 GHz	155	157	155	157
2 GHz to 3.2 GHz	153	156	152	156
3.2 GHz to 8.5 GHz	153	156	155	156
8.5 GHz to 10 GHz	156	155	156	155
10 GHz to 13.5 GHz	156	155	156	155
13.5 GHz to 16 GHz	154	153	154	153
16 GHz to 20 GHz	152	151	152	151
20 GHz to 24 GHz	152	148	152	148
24 GHz to 26.5 GHz	145	142	145	142

[1] Either port can be used as the source port. Any other port can be used as the receiver port.

Table 15. Extended Dynamic Range at Direct Receiver Access Input (dB) - Typical

Description	Option 205		Option 425		Options 425, 029	
	Ports[1] 1, 3	Ports[1] 2, 4	Ports[1] 1, 3	Ports[1] 2, 4	Port 1	Port 2
10 MHz to 50 MHz	147	147	147	146	147	147
50 MHz to 100 MHz	148	149	149	150	149	150
100 MHz to 500 MHz	153	154	153	154	153	155
500 MHz to 2 GHz	152	155	154	155	154	156
2 GHz to 3.2 GHz	149	153	152	155	151	156
3.2 GHz to 8.5 GHz	154	154	154	154	152	153
8.5 GHz to 10 GHz	155	154	154	153	153	153
10 GHz to 13.5 GHz	154	153	154	153	153	152
13.5 GHz to 16 GHz	153	152	152	151	153	151
16 GHz to 20 GHz	151	149	151	150	151	149
20 GHz to 24 GHz	150	148	151	147	151	146
24 GHz to 26.5 GHz	148	145	145	142	143	141

[1] Either port can be used as the source port. Any other port can be used as the receiver port.

Receiver Dynamic Range

Table 16. Receiver Dynamic Range (dB), All Options

Description	Typical
10 MHz to 50 MHz[1]	--
50 MHz to 100 MHz[1]	--
100 MHz to 500 MHz	125
500 MHz to 3.2 GHz	130
3.2 GHz to 8.5 GHz	130
8.5 GHz to 13.5 GHz	130
13.5 GHz to 16 GHz	130
16 GHz to 20 GHz	129
20 GHz to 24 GHz	126
24 GHz to 26.5 GHz	123

[1] With an LFE option installed and LFE disabled, applied to frequencies ≤ 100 MHz. Above 100 MHz, performance is the same for both LFE enabled or disabled.

Table 17. Receiver Dynamic Range (dB), All Ports, All LFE Options (LFE Enabled)

Description	Typical
500 Hz to 900 Hz	106
900 Hz to 1 kHz	109
1 kHz to 10 kHz	109
10 kHz to 100 kHz	118
100 kHz to 1 MHz	123
1 MHz to 5 MHz	123
5 MHz to 10 MHz	119
10 MHz to 50 MHz	120
50 MHz to 100 MHz	120

Corrected System Performance with 3.5mm Connectors, All Options

Specification are valid for temperatures of 23°±3°C and < 1° C deviation from the calibration temperature. Specifications assume an N4697F flexible test port cable and a full 2-port calibration. For instruments with Option 029, the port 1 noise tuner switch is set to the bypass position, and the port 2 noise receiver switch is set to the normal position.

For any Sii reflection measurement:

- Sjj = 0.

For any Sij transmission measurement:

- Sji = Sij when Sij ≤ 1
- Sji = 1/Sij when Sij > 1
- Skk = 0 for all k

Please download our free Uncertainty Calculator from http://www.keysight.com/find/na_calculator for specifications for other calibration kits and measurement setups.

Table 18. 85052B Calibration Kit

Description	Specification (dB)						
	10 MHz to 50 MHz	50 MHz to 500 MHz	500 MHz to 2 GHz	2 GHz to 8.5 GHz	8.5 GHz to 13.5 GHz	13.5 GHz to 20 GHz	20 GHz to 26.5 GHz
Directivity	48	48	48	44	44	44	44
Source Match	40	40	40	31	31	31	31
Load Match	47	47	47	43	43	43	43
Reflection Tracking							
Mag	±0.0030	±0.0030	±0.0030	±0.0061	±0.0061	±0.0061	±0.0061
Phase (°)	±0.020	±0.020	±0.020	±0.040	±0.040	±0.040	±0.040
Transmission Tracking							
Mag	±0.044	±0.055	±0.055	±0.12	±0.11	±0.14	±0.16
Phase (°)	±0.29	±0.37	±0.37	±0.74	±0.71	±0.88	±1.1

Transmission Uncertainty

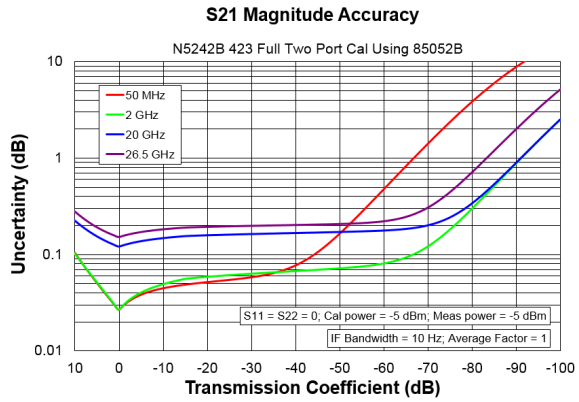

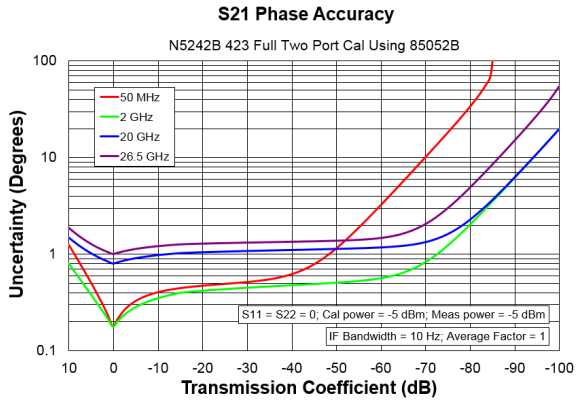

Reflection Uncertainty

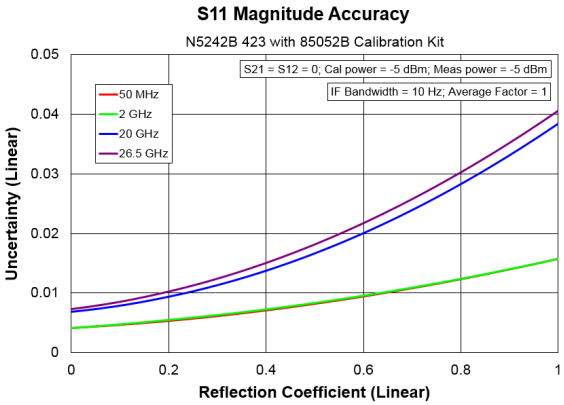

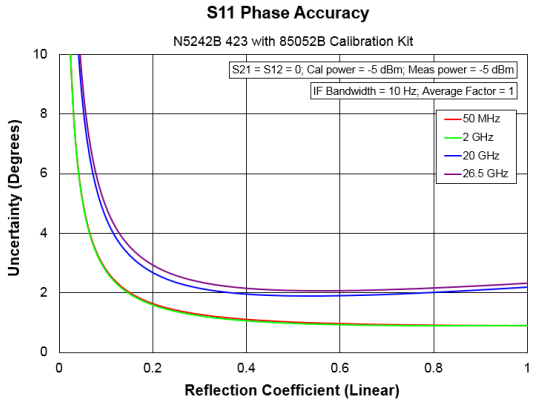

Table 19. 85052B Calibration Kit, Option 425 (LFE Enabled)

Description	Specification (dB)				
	1 kHz to 10 kHz	10 kHz to 1 MHz	1 MHz to 5 MHz	5 MHz to 50 MHz	50 MHz to 100 MHz
Directivity	48	48	48	48	48
Source Match	40	40	40	40	40
Load Match	47	48	48	47	47
Reflection Tracking					
Mag	±0.0030	±0.0030	±0.0030	±0.0030	±0.0030
Phase (°)	±0.020	±0.020	±0.020	±0.020	±0.020
Transmission Tracking					
Mag	±0.055	±0.016	±0.037	±0.051	±0.045
Phase (°)	±0.37	±0.11	±0.25	±0.34	±0.30

Transmission Uncertainty, Option 425

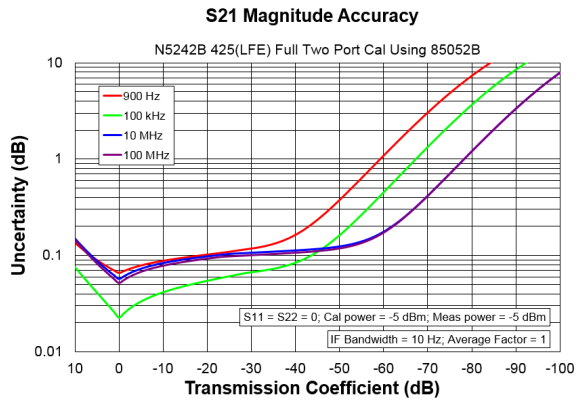

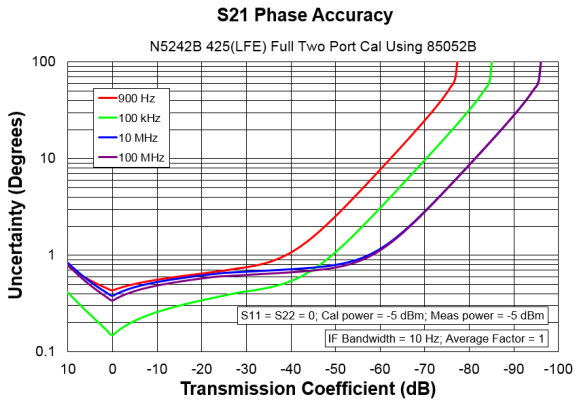

Reflection Uncertainty, Option 425

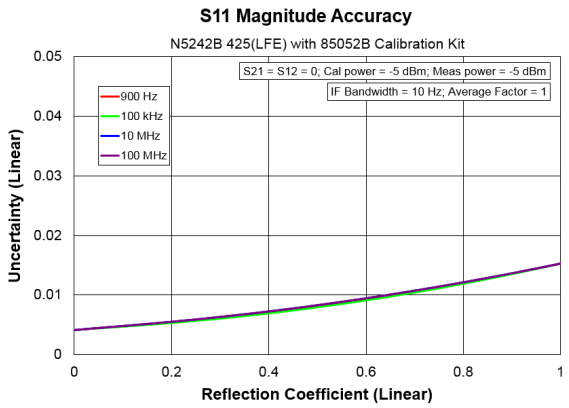

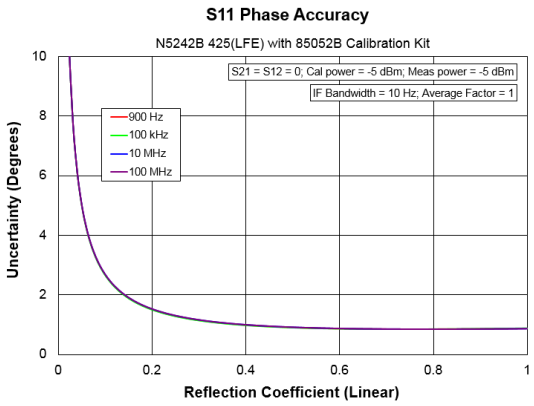

Table 20. N4691B Calibration Kit

Description	Specification (dB)						
	10 MHz to 50 MHz	50 MHz to 500 MHz	500 MHz to 2 GHz	2 GHz to 8.5 GHz	8.5 GHz to 13.5 GHz	13.5 GHz to 20 GHz	20 GHz to 26.5 GHz
Directivity	46	46	52	48	46	46	44
Source Match	41	41	47	45	42	42	40
Load Match	39	38	45	42	40	39	37
Reflection Tracking							
Mag	±0.051	±0.051	±0.020	±0.031	±0.041	±0.041	±0.051
Phase (°)	±0.34	±0.34	±0.14	±0.20	±0.27	±0.27	±0.34
Transmission Tracking							
Mag	±0.066	±0.070	±0.030	±0.046	±0.056	±0.060	±0.078
Phase (°)	±0.44	±0.46	±0.20	±0.31	±0.37	±0.40	±0.52

Transmission Uncertainty

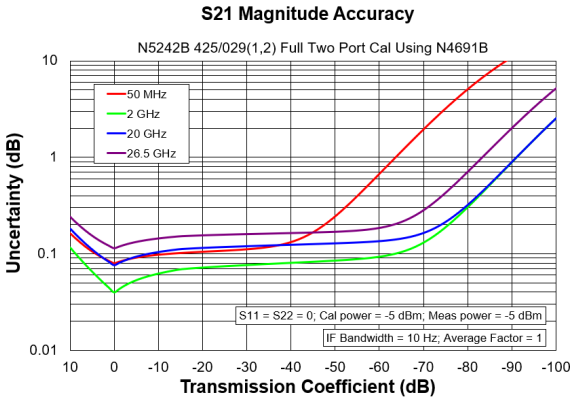

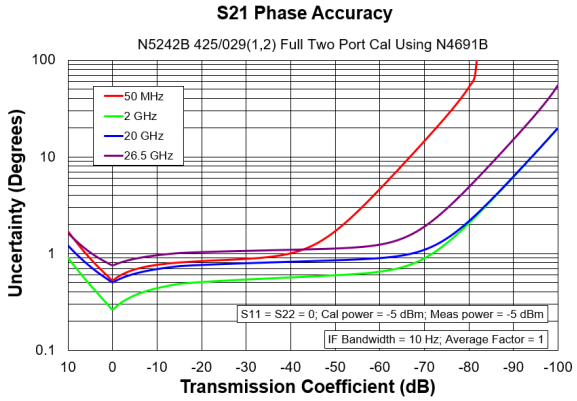

Reflection Uncertainty

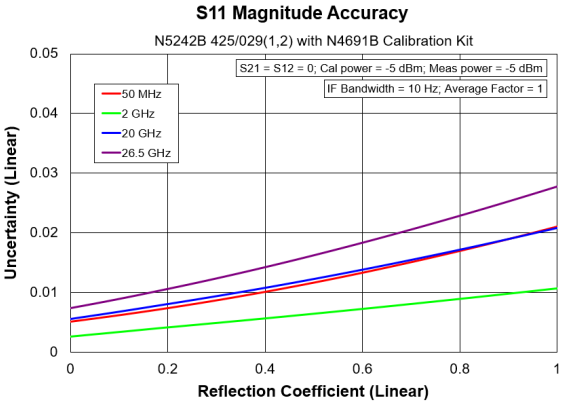

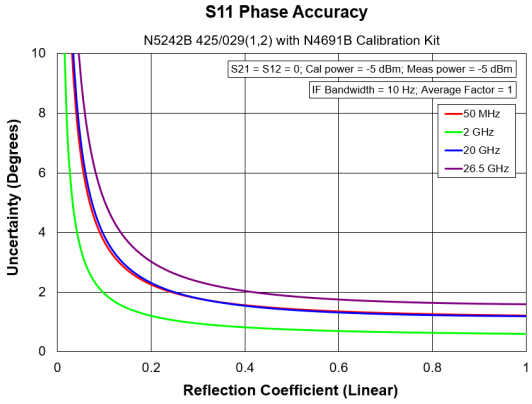

Table 21. N4691B Calibration Kit, Option 425 with Option 029 (LFE Enabled)

Description	Specification (dB)				
	1 kHz to 10 kHz	10 kHz to 1 MHz	1 MHz to 5 MHz	5 MHz to 50 MHz	50 MHz to 100 MHz
Directivity	31	31	31	41	46
Source Match	29	29	29	36	41
Load Match	27	28	28	34	39
Reflection Tracking					
Mag	±0.12	±0.12	±0.12	±0.061	±0.051
Phase (°)	±0.74	±0.74	±0.74	±0.40	±0.34
Transmission Tracking					
Mag	±0.22	±0.14	±0.18	±0.091	±0.066
Phase (°)	±1.5	±0.92	±1.2	±0.61	±0.44

Transmission Uncertainty, Option 425 with Option 029

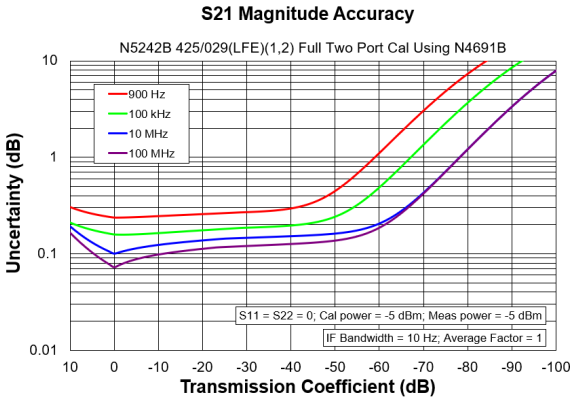

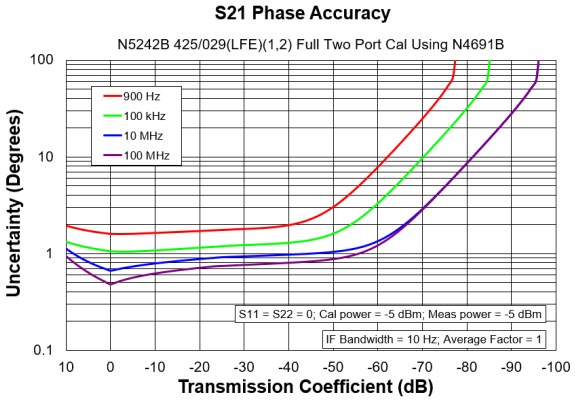

Reflection Uncertainty, Option 425 with Option 029

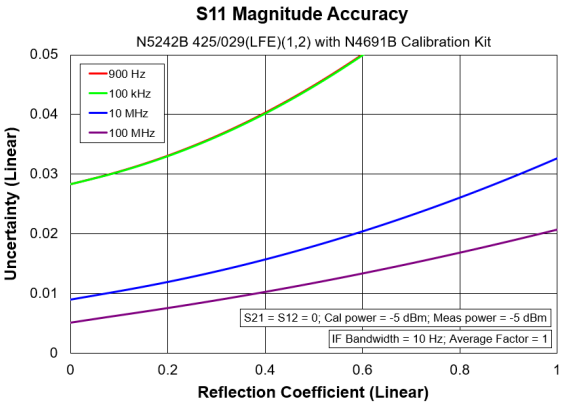

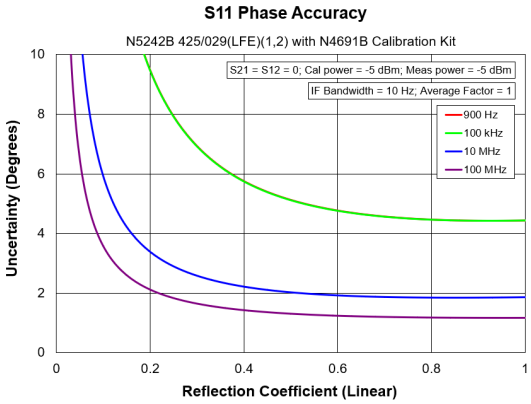

Table 22. N4691D Calibration Kit

Description	Specification (dB)						
	10 MHz to 50 MHz	50 MHz to 500 MHz	500 MHz to 2 GHz	2 GHz to 8.5 GHz	8.5 GHz to 13.5 GHz	13.5 GHz to 20 GHz	20 GHz to 26.5 GHz
Directivity	46	46	47	46	43	43	41
Source Match	41	41	47	45	42	42	40
Load Match	39	38	45	42	40	39	37
Reflection Tracking							
Mag	±0.051	±0.051	±0.020	±0.031	±0.041	±0.041	±0.051
Phase (°)	±0.34	±0.34	±0.14	±0.20	±0.27	±0.27	±0.34
Transmission Tracking							
Mag	±0.066	±0.070	±0.038	±0.050	±0.062	±0.068	±0.089
Phase (°)	±0.44	±0.46	±0.25	±0.33	±0.41	±0.45	±0.59

Transmission Uncertainty

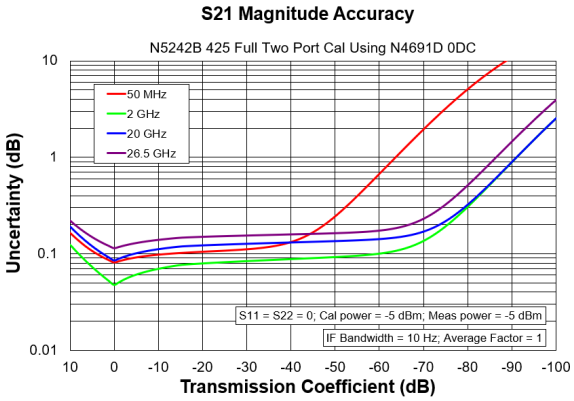

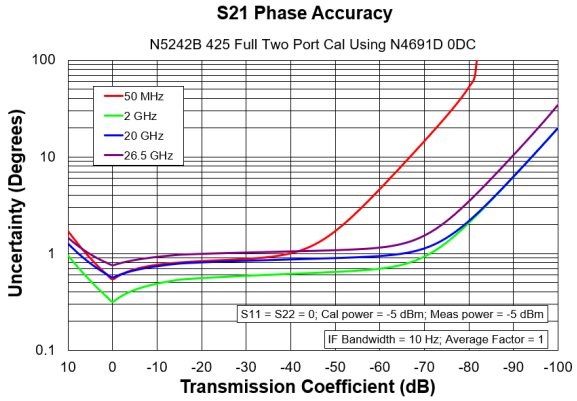

Reflection Uncertainty

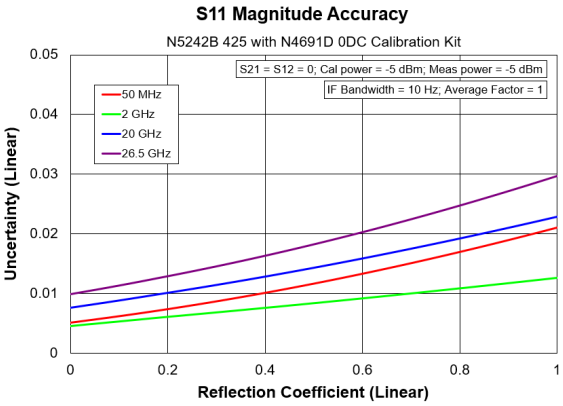

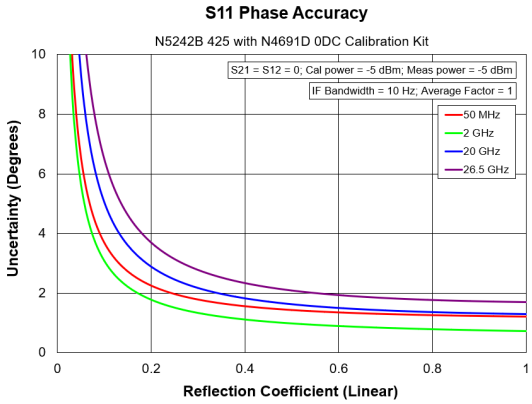

Table 23. N4691D Calibration Kit, Option 425 with Option 029 (LFE Enabled)

Description	Specification (dB)				
	1 kHz to 10 kHz	10 kHz to 1 MHz	1 MHz to 5 MHz	5 MHz to 50 MHz	50 MHz to 100 MHz
Directivity	46	46	46	46	46
Source Match	41	41	41	41	41
Load Match	38	40	39	39	39
Reflection Tracking					
Mag	±0.051	±0.051	±0.051	±0.051	±0.051
Phase (°)	±0.34	±0.34	±0.34	±0.34	±0.34
Transmission Tracking					
Mag	±0.070	±0.055	±0.063	±0.068	±0.066
Phase (°)	±0.46	±0.37	±0.42	±0.45	±0.44

Transmission Uncertainty, Option 425 with Option 029

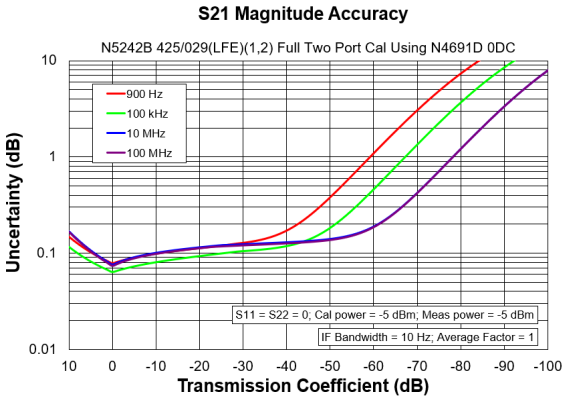

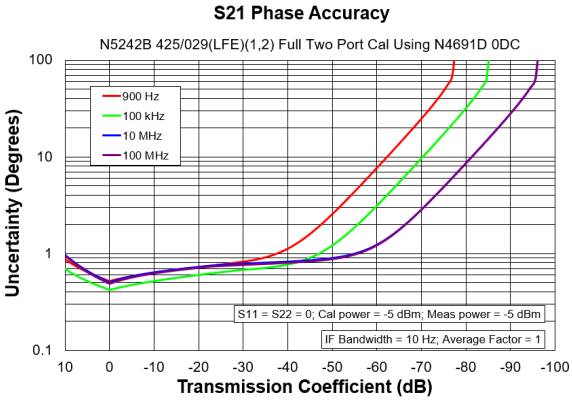

Reflection Uncertainty, Option 425 with Option 029

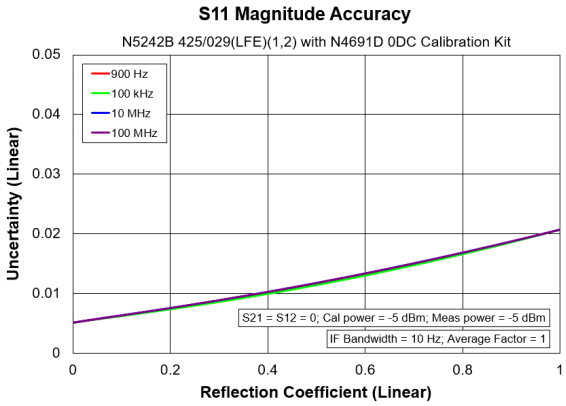

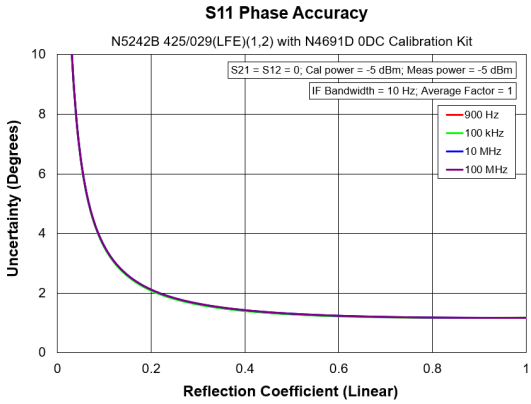

Uncorrected System Performance

Specifications apply to following conditions:

- Cable loss not included in Transmission Tracking.
- Crosstalk measurement conditions: normalized to a thru, measured with shorts on all ports, 10 Hz IF bandwidth, averaging factor of 8, alternate mode, source power set to the specified maximum power.
- With option 029, port 1 impedance tuner switch is in external position and port 2 noise receiver switch is in noise receiver position unless specified. Refer to Options 201, 21x, 22x, 401, 41x, 42x for performance of Option 029 Port 1 with impedance tuner switch in internal position, Port 2 noise receiver switch in normal position, Ports 3 and 4.

Table 24. Directivity (dB), Option 2xx, 4xx

Description	Specification		Typical	
	Without Option 029	With Option 029	Without Option 029	With Option 029
	All Ports	Ports 1, 2	All Ports	Ports 1, 2
10 MHz to 50 MHz[1]	16 (16)	16 (16)	23	22
50 MHz to 500 MHz[1]	24 (24)	24 (24)	28	28
500 MHz to 3.2 GHz	24 (24)	24 (24)	32	32
3.2 GHz to 8.5 GHz	23 (23)	23 (23)	25	25
8.5 GHz to 10 GHz	23 (22)	23 (22)	25	25
10 GHz to 13.5 GHz	16 (16)	16 (16)	22	20
13.5 GHz to 16 GHz	16 (16)	16 (16)	22	20
16 GHz to 20 GHz	16 (16)	15 (15)	22	20
20 GHz to 24 GHz	16 (16)	15 (15)	22	20
24 GHz to 26.5 GHz	16 (16)	15 (15)	22	20

( ) With an LFE option installed.
[1] With an LFE option installed and LFE disabled, applied to frequencies ≤ 100 MHz. Above 100 MHz, performance is the same for both LFE enabled or disabled. For LFE enabled performance ≤ 100 MHz, see Table 28 and Table 29.

Table 25. Source Match (dB), Option 2xx, 4xx

Description	Specification			Typical		
	Without Option 029	With Option 029		Without Option 029	With Option 029	
	All Ports	Ports 1	Port 2	All Ports	Port 1	Port 2
10 MHz to 50 MHz[1]	11 (9)	9 (9)	9 (9)	14 (11)	13 (11)	12 (12)
50 MHz to 500 MHz[1]	18 (7)	18 (7)	13 (7)	28 (8)	28 (8)	15 (8)
500 MHz to 3.2 GHz	18 (7)	17 (7)	9 (7)	22 (8)	22 (8)	12 (8)
3.2 GHz to 8.5 GHz	14 (9)	12 (9)	6 (5)	18 (14)	18 (14)	7 (6)
8.5 GHz to 10 GHz	14 (9)	12 (9)	6 (5)	18 (14)	18 (14)	7 (6)
10 GHz to 13.5 GHz	12 (9)	11 (9)	6 (5)	16 (14)	16 (14)	8 (7)
13.5 GHz to 16 GHz	12 (10)	11 (10)	6 (6)	16 (16)	16 (16)	8 (8)
16 GHz to 20 GHz	10 (8)	9 (8)	7 (7)	15 (13)	13 (13)	9 (9)
20 GHz to 24 GHz	10 (6)	8 (6)	6 (6)	14 (11)	13 (11)	9 (9)
24 GHz to 26.5 GHz	8 (6)	7 (6)	6 (6)	12 (11)	12 (11)	9 (9)

( ) With an LFE option installed.
[1] With an LFE option installed and LFE disabled, applied to frequencies ≤ 100 MHz. Above 100 MHz, performance is the same for both LFE enabled or disabled. For LFE enabled performance ≤ 100 MHz, see Table 28 and Table 29.

Table 26. Load Match (dB), Option 2xx, 4xx

Description	Specification			Typical		
	Without Option 029	With Option 029		Without Option 029	With Option 029	
	All Ports	Ports 1	Port 2	All Ports	Port 1	Port 2
10 MHz to 50 MHz[1]	11 (9)	11 (9)	9 (9)	18 (10)	18 (10)	12 (10)
50 MHz to 500 MHz[1]	17 (7)	17 (7)	13 (7)	25 (8)	24 (8)	15 (8)
500 MHz to 3.2 GHz	17 (7)	15 (7)	9 (7)	22 (8)	19 (8)	12 (8)
3.2 GHz to 8.5 GHz	13 (9)	10 (9)	5.5 (5.5)	17 (14)	15 (14)	7.5 (7.5)
8.5 GHz to 10 GHz	13 (9)	10 (9)	5.5 (5.5)	17 (12)	15 (12)	7.5 (7.5)
10 GHz to 13.5 GHz	10 (9)	9 (9)	5.5 (5.5)	15 (14)	15 (14)	7.5 (7.5)
13.5 GHz to 16 GHz	10 (9)	9 (9)	5.5 (5.5)	15 (14)	15 (14)	7.5 (7.5)
16 GHz to 20 GHz	9 (7)	8 (7)	5.5 (5.5)	14 (12)	13 (12)	7.5 (7.5)
20 GHz to 24 GHz	9 (6)	7 (6)	5.5 (5.5)	14 (11)	13 (11)	7.5 (7.5)
24 GHz to 26.5 GHz	8 (6)	7 (6)	5.5 (5.5)	13 (11)	11 (11)	7.5 (7.5)

( ) With and LFE option installed.
[1] With an LFE option installed and LFE disabled, applied to frequencies ≤ 100 MHz. Above 100 MHz, performance is the same for both LFE enabled or disabled. For LFE enabled performance ≤ 100 MHz, see Table 28 and Table 29.

Table 27. Transmission Tracking, Reflection Tracking, Crosstalk (dB), All Options, All Ports-Typical

Description	Transmission Tracking	Reflection Tracking	Crosstalk
10 MHz to 50 MHz[1]	±1.5	±1.5	-84
50 MHz to 100 MHz[1]	±1.5	±1.5	-90
100 MHz to 500 MHz	±1.5	±1.5	-110
500 MHz to 3.2 GHz	±1.5	±1.5	-120
3.2 GHz to 8.5 GHz	±1.5	±1.5	-122
8.5 GHz to 13.5 GHz	±1.5	±1.5	-122
13.5 GHz to 20 GHz	±1.5	±1.5	-122
20 GHz to 24 GHz	±1.5	±1.5	-117
24 GHz to 26.5 GHz	±1.5	±1.5	-114

[1] With an LFE option installed and LFE disabled, applied to frequencies ≤ 100 MHz. Above 100 MHz, performance is the same for both LFE enabled or disabled. For LFE enabled performance ≤ 100 MHz, see Table 28 and Table 29.

Table 28. Uncorrected System Performance (dB), All Ports, All LFE Options (LFE Enabled) - Specifications

Description	Directivity	Source Match	Load Match	Transmission Tracking	Reflection Tracking	Crosstalk
1 kHz to 10 kHz	1	7	7	--	--	--
10 kHz to 1 MHz	16	15	19	--	--	--
1 MHz to 5 MHz	16	9	11	--	--	--
5 MHz to 50 MHz	5	7	8	--	--	--
50 MHz to 100 MHz	5	8	9	--	--	--

Table 29. Uncorrected System Performance (dB), All Ports, All LFE Options (LFE Enabled)- Typical

Description	Directivity	Source Match	Load Match	Transmission Tracking	Reflection Tracking	Crosstalk
500 Hz to 900 Hz	--	--	--	--	--	-102
900 Hz to 1 kHz	4	8	9	±1.5	±1.5	-106
1 kHz to 10 kHz	5	9	8	±1.5	±1.5	-100
10 kHz to 100 kHz	23	19	23	±1.5	±1.5	-106
100 kHz to 1 MHz	23	19	23	±1.5	±1.5	-126
1 MHz to 5 MHz	26	13	14	±1.5	±1.5	-121
5 MHz to 10 MHz	11	9	10	±1.5	±1.5	-121
10 MHz to 50 MHz	11	9	10	±1.5	±1.5	-117
50 MHz to 100 MHz	11	11	11	±1.5	±1.5	-117[1]

1 At 100 MHz, crosstalk is -106.

Test Port Output

See the block diagrams at the end of this document for all models and options.

With option 029, port 1 noise tuner switch is in internal position and port 2 noise receiver switch is in normal position unless specified.

Table 30. Frequency Information, All Options

Description	Specification	Typical
N5249B Frequency Range	10 MHz to 8.5 GHz	--
N5241B Frequency Range	10 MHz to 13.5 GHz	--
N5242B Frequency Range	10 MHz to 26.5 GHz	--
N5242B Frequency Range (Option 425)	900 Hz to 26.5 GHz	500 Hz to 900 Hz
Frequency Resolution	1 Hz	--
Frequency Accuracy	± 0.7 ppm	--
Initial Frequency Accuracy[1]	± 0.2 ppm	± 0.1 ppm
Frequency Stability	--	±0.05 ppm, -10° to 70° C[2] ±0.5 ppm (first year)[3]

[1] Verified after Factory Frequency Reference adjustment, or after adjustment at a Keysight Service Center.
[2] Assumes no variation in time.
[3] Assumes no variation in temperature.

Table 31. Maximum Leveled Power (dBm), Options 201 or 401

Description	Specification			Typical		
	Ports[1] 1, 3		Ports[1] 2, 4	Ports[1] 1, 3		Ports[1] 2, 4
	Filtered Mode[2]	Hi Power Mode[2]		Filtered Mode[2]	Hi Power Mode[2]	
10 MHz to 50 MHz	8	13	13	10	19	17
50 MHz to 500 MHz	10	13	13	11	21	20
500 MHz to 3.2 GHz	10	10	13	12	13	18
3.2 GHz to 8.5 GHz	13	13	13	20	20	19
8.5 GHz to 10 GHz	13	13	13	20	20	19
10 GHz to 13.5 GHz	13	13	13	17	17	16
13.5 GHz to 16 GHz	13	13	13	17	17	16
16 GHz to 20 GHz	13	13	10	16	16	12
20 GHz to 24 GHz	12	12	7	15	15	11
24 GHz to 26.5 GHz	5	5	2	11	11	7

[1] Either port can be used as the source port.
[2] In Filtered Mode, the signal path goes through filters to minimize harmonics below 3.2 GHz. In Hi Power Mode, the signal bypasses the filters to maximize output power.

Table 32. Maximum Leveled Power (dBm), Options 21x or 41x

Description	Specification			Typical		
	Ports[1] 1, 3		Ports[1] 2, 4	Ports[1] 1, 3		Ports[1] 2, 4
	Filtered Mode[2]	Hi Power Mode[2]		Filtered Mode[2]	Hi Power Mode[2]	
10 MHz to 50 MHz	8	13	13	10	19	17
50 MHz to 500 MHz	10	13	13	11	20	19
500 MHz to 3.2 GHz	10	10	13	11	13	18
3.2 GHz to 8.5 GHz	13	13	13	18	18	17
8.5 GHz to 10 GHz	13	13	13	18	18	17
10 GHz to 13.5 GHz	12	12	11	15	15	14
13.5 GHz to 16 GHz	12	12	11	15	15	14
16 GHz to 20 GHz	10	10	8	13	13	10
20 GHz to 24 GHz	8	8	7	12	12	9
24 GHz to 26.5 GHz	3	3	-1	8	8	4

[1] Either port can be used as the source port.
[2] In Filtered Mode, the signal path goes through filters to minimize harmonics below 3.2 GHz. In Hi Power Mode, the signal bypasses the filters to maximize output power.

Table 33. Maximum Leveled Power (dBm), Option 21x or 41x with 029[1]

Description	Specification			Typical		
	Port 1		Port 2	Port 1		Port 2
	Filtered Mode[2]	Hi Power Mode[2]		Filtered Mode[2]	Hi Power Mode[2]	
10 MHz to 50 MHz	8	13	13	10	19	17
50 MHz to 500 MHz	10	13	13	11	20	19
500 MHz to 3.2 GHz	10	10	13	11	13	18
3.2 GHz to 8.5 GHz	13	13	13	18	18	17
8.5 GHz to 10 GHz	13	13	13	18	18	17
10 GHz to 13.5 GHz	12	12	11	15	15	14
13.5 GHz to 16 GHz	12	12	11	15	15	14
16 GHz to 20 GHz	10	10	8	13	13	10
20 GHz to 24 GHz	8	8	7	12	12	9
24 GHz to 26.5 GHz	3	3	-1	8	8	4

[1] Option 029 affects port 1 and port 2 maximum leveled power. Refer to Table 32 for other ports.
[2] In Filtered Mode, the signal path goes through filters to minimize harmonics below 3.2 GHz. In Hi Power Mode, the signal bypasses the filters to maximize output power.

Table 34. Maximum Leveled Power (dBm), Options 22x, 422, or 423

Description	Specification			Typical		
	Ports[1] 1, 3		Ports[1] 2, 4	Ports[1] 1, 3		Ports[1] 2, 4
	Filtered Mode[2]	Hi Power Mode[2]		Filtered Mode[2]	Hi Power Mode[2]	
10 MHz to 50 MHz	7	13	13	9	19	17
50 MHz to 500 MHz	8	13	13	11	20	20
500 MHz to 3.2 GHz	8	10	13	11	13	17
3.2 GHz to 8.5 GHz	13	13	13	19	19	17
8.5 GHz to 10 GHz	13	13	13	19	19	17
10 GHz to 13.5 GHz	12	12	10	15	15	14
13.5 GHz to 16 GHz	12	12	10	15	15	14
16 GHz to 20 GHz	10	10	7	13	13	10
20 GHz to 24 GHz	7	7	5	12	12	9
24 GHz to 26.5 GHz	0	0	-2	8	8	4

[1] Either port can be used as the source port.
[2] In Filtered Mode, the signal path goes through filters to minimize harmonics below 3.2 GHz. In Hi Power Mode, the signal bypasses the filters to maximize output power.

Table 35. Maximum Leveled Power (dBm), Options 22x, 422, or 423, Combine Mode - Typical

Description	Source 1 Port 1		Source 2 Port 1	
	Filtered Mode[1]	Hi Power Mode[1]	Filtered Mode[1]	Hi Power Mode[1]
10 MHz to 50 MHz	7	17	-7	3
50 MHz to 500 MHz	9	17	-5	4
500 MHz to 3.2 GHz	9	10	-5	-4
3.2 GHz to 8.5 GHz	15	15	2	2
8.5 GHz to 10 GHz	15	15	2	2
10 GHz to 13.5 GHz	11	11	-2	-2
13.5 GHz to 16 GHz	11	11	-2	-2
16 GHz to 20 GHz	8	8	-4	-4
20 GHz to 24 GHz	6	6	-6	-6
24 GHz to 26.5 GHz	2	2	-11	-11

[1] In Filtered Mode, the signal path goes through filters to minimize harmonics below 3.2 GHz. In Hi Power Mode, the signal bypasses the filters to maximize output power.

Table 36. Maximum Leveled Power (dBm), Option 22x

Description	Specification			Typical		
	Source 2 Out 1		Source 2 Out 2	Source 2 Out 1		Source 2 Out 2
	Filtered Mode[1]	Hi Power Mode[1]		Filtered Mode[1]	Hi Power Mode[1]	
10 MHz to 50 MHz	9	18	13	12	21	18
50 MHz to 500 MHz	11	18	17	13	22	21
500 MHz to 3.2 GHz	10	14	14	13	17	19
3.2 GHz to 8.5 GHz	18	18	18	22	22	22
8.5 GHz to 10 GHz	18	18	18	22	22	22
10 GHz to 13.5 GHz	16	16	16	21	21	20
13.5 GHz to 16 GHz	16	16	16	21	21	20
16 GHz to 20 GHz	15	15	13	19	19	17
20 GHz to 24 GHz	13	13	12	18	18	17
24 GHz to 26.5 GHz	7	7	5	14	14	11

[1] In Filtered Mode, the signal path goes through filters to minimize harmonics below 3.2 GHz. In Hi Power Mode, the signal bypasses the filters to maximize output power.

Table 37. Maximum Leveled Power (dBm), Options 22x, 422, or 423 with 029[1]

Description	Specification			Typical		
	Port 1		Port 2	Port 1		Port 2
	Filtered Mode[2]	Hi Power Mode[2]		Filtered Mode[2]	Hi Power Mode[2]	
10 MHz to 50 MHz	6	12	13	8	18	17
50 MHz to 500 MHz	8	13	13	11	20	20
500 MHz to 3.2 GHz	8	10	12	11	13	16
3.2 GHz to 8.5 GHz	13	13	13	19	19	17
8.5 GHz to 10 GHz	13	13	13	19	19	17
10 GHz to 13.5 GHz	12	12	10	15	15	14
13.5 GHz to 16 GHz	12	12	10	15	15	14
16 GHz to 20 GHz	10	10	6	13	13	9
20 GHz to 24 GHz	6	6	4	11	11	8
24 GHz to 26.5 GHz	0	0	-2	8	8	4

[1] Option 029 affects port 1 and port 2 maximum leveled power. Refer to Table 34 for other ports.
[2] In Filtered Mode, the signal path goes through filters to minimize harmonics below 3.2 GHz. In Hi Power Mode, the signal bypasses the filters to maximize output power.

Table 38. Maximum Leveled Power (dBm), Options 22x or 422, or 423 with 029[1], Combine Mode-Typical

Description	Source 1 Port 1		Source 2 Port 1	
	Filtered Mode[2]	Hi Power Mode[2]	Filtered Mode[2]	Hi Power Mode[2]
10 MHz to 50 MHz	6	16	-8	2
50 MHz to 500 MHz	9	17	-5	4
500 MHz to 3.2 GHz	9	10	-5	-4
3.2 GHz to 8.5 GHz	15	15	2	2
8.5 GHz to 10 GHz	15	15	2	2
10 GHz to 13.5 GHz	11	11	-2	-2
13.5 GHz to 16 GHz	11	11	-2	-2
16 GHz to 20 GHz	8	8	-4	-4
20 GHz to 24 GHz	5	5	-7	-7
24 GHz to 26.5 GHz	0	0	-11	-11

[1] Option 029 affects port 1 and port 2 maximum leveled power. Refer to Table 34 for other ports.
[2] In Filtered Mode, the signal path goes through filters to minimize harmonics below 3.2 GHz. In Hi Power Mode, the signal bypasses the filters to maximize output power.

Table 39. Maximum Leveled Power (dBm), N5241B and N5242B, Port 1 and 2, Option 205

Description	Specification			Typical		
	Port 1		Port 2	Port 1		Port 2
	Filtered Mode[1]	Hi Power Mode[1]		Filtered Mode[1]	Hi Power Mode[1]	
10 MHz to 50 MHz[2]	1	6	6	3	12	10
50 MHz to 500 MHz[2]	3	6	9	7	17	16
500 MHz to 3.2 GHz	7	7	10	9	10	15
3.2 GHz to 8.5 GHz	11	11	11	18	18	17
8.5 GHz to 10 GHz	11	11	11	18	18	17
10 GHz to 13.5 GHz	11	11	11	15	15	14
13.5 GHz to 16 GHz	11	11	11	15	15	14
16 GHz to 20 GHz	11	11	8	14	14	10
20 GHz to 24 GHz	10	10	5	13	14	9
24 GHz to 26.5 GHz	3	3	0	9	9	5

[1] In Filtered Mode, the signal path goes through filters to minimize harmonics below 3.2 GHz. In Hi Power Mode, the signal bypasses the filters to maximize output power.
[2] With Option 205 installed and LFE disabled, applied to frequencies ≤ 100 MHz. Above 100 MHz, performance is the same for both LFE enabled or disabled. For LFE enabled performance ≤ 100 MHz, see Table 45.

Table 40. Maximum Leveled Power (dBm), Port 1 and 2, Option 425 with 029[1]

Description	Specification			Typical		
	Port 1		Port 2	Port 1		Port 2
	Filtered Mode[2]	Hi Power Mode[2]		Filtered Mode[2]	Hi Power Mode[2]	
10 MHz to 50 MHz[3]	-2	5	5	0	11	9
50 MHz to 500 MHz[3]	3	8	7	6	15	14
500 MHz to 3.2 GHz	3	5	7	6	8	11
3.2 GHz to 10 GHz	11	11	11	17	17	15
10 GHz to 16 GHz	10	10	8	13	13	12
16 GHz to 20 GHz	8	8	4	11	11	7
20 GHz to 24 GHz	4	4	2	9	9	6
24 GHz to 26.5 GHz	-2	-2	-4	6	6	2

[1] Option 029 only affects port 1 and port 2 maximum leveled power. Refer to Table 41 for ports 3 and 4.
[2] In Filtered Mode, the signal path goes through filters to minimize harmonics below 3.2 GHz. In Hi Power Mode, the signal bypasses the filters to maximize output power.
[3] With Option 425 installed and LFE disabled, applied to frequencies ≤ 100 MHz. Above 100 MHz, performance is the same for both LFE enabled or disabled. For LFE enabled performance ≤ 100 MHz, see Table 45.

Table 41. Maximum Leveled Power (dBm), Option 425

Description	Specification			Typical		
	Ports 1, 3		Ports 2, 4	Ports 1, 3		Ports 2, 4
	Filtered Mode[1]	Hi Power Mode[1]		Filtered Mode[1]	Hi Power Mode[1]	
10 MHz to 50 MHz[2]	-1	5	5	1	11	9
50 MHz to 500 MHz[2]	3	8	8	6	15	15
500 MHz to 3.2 GHz	3	5	8	6	8	12
3.2 GHz to 10 GHz	11	11	11	17	17	15
10 GHz to 16 GHz	10	10	8	13	13	12
16 GHz to 20 GHz	8	8	5	11	11	8
20 GHz to 24 GHz	5	5	3	10	10	7
24 GHz to 26.5 GHz	-2	-2	-4	6	6	2

[1] In Filtered Mode, the signal path goes through filters to minimize harmonics below 3.2 GHz. In Hi Power Mode, the signal bypasses the filters to maximize output power.
[2] With Option 425 installed and LFE disabled, applied to frequencies ≤ 100 MHz. Above 100 MHz, performance is the same for both LFE enabled or disabled. For LFE enabled performance ≤ 100 MHz, see Table 45.

Table 42. Maximum Leveled Power (dBm), Option 425, Combine Mode - Typical

Description	Source 1 Port 1		Source 2 Port 1	
	Filtered Mode[1]	Hi Power Mode[1]	Filtered Mode[1]	Hi Power Mode[1]
10 MHz to 50 MHz[2]	0	10	-14	-4
50 MHz to 500 MHz[2]	4	12	-10	-1
500 MHz to 3.2 GHz	4	5	-10	-9
3.2 GHz to 10 GHz	13	13	0	0
10 GHz to 16 GHz	9	9	-4	-4
16 GHz to 20 GHz	6	6	-6	-6
20 GHz to 24 GHz	4	4	-8	-8
24 GHz to 26.5 GHz	0	0	-13	-13

[1] In Filtered Mode, the signal path goes through filters to minimize harmonics below 3.2 GHz. In Hi Power Mode, the signal bypasses the filters to maximize output power.
[2] With Option 425 installed and LFE disabled, applied to frequencies ≤ 100 MHz. Above 100 MHz, performance is the same for both LFE enabled or disabled. For LFE enabled performance ≤ 100 MHz, see Table 45.

Table 43. Maximum Leveled Power (dBm), Option 425 with 029, Combine Mode - Typical

Description	Source 1 Port 1		Source 2 Port 1	
	Filtered Mode[1]	Hi Power Mode[1]	Filtered Mode[1]	Hi Power Mode[1]
10 MHz to 50 MHz[2]	-1	9	-15	-5
50 MHz to 500 MHz[2]	4	12	-10	-1
500 MHz to 3.2 GHz	4	5	-10	-9
3.2 GHz to 10 GHz	13	13	0	0
10 GHz to 16 GHz	9	9	-4	-4
16 GHz to 20 GHz	6	6	-6	-6
20 GHz to 24 GHz	3	3	-9	-9
24 GHz to 26.5 GHz	-2	-2	-13	-13

[1] In Filtered Mode, the signal path goes through filters to minimize harmonics below 3.2 GHz. In Hi Power Mode, the signal bypasses the filters to maximize output power.
[2] With Option 425 installed and LFE disabled, applied to frequencies ≤ 100 MHz. Above 100 MHz, performance is the same for both LFE enabled or disabled. For LFE enabled performance ≤ 100 MHz, see Table 45.

Table 44. Maximum Power (dBm), All Ports, Option 425 (LFE Enabled), Combine Mode - Typical

Description	Source 1 Port 1	Source 2 Port 1
500 Hz to 900 Hz	6	6
900 Hz to 1 kHz	7	6
1 kHz to 10 kHz	7	7
10 kHz to 100 kHz	8	7
100 kHz to 1 MHz	8	7
1 MHz to 5 MHz	7	6
5 MHz to 10 MHz	5	4
10 MHz to 50 MHz	5	4
50 MHz to 100 MHz	5	4

Table 45. Maximum Power (dBm), All Ports – All LFE Options (LFE Enabled)

Description	Specification	Typical[1]
500 Hz to 900 Hz	--	12
900 Hz to 1 kHz	10	13
1 kHz to 10 kHz	12	13
10 kHz to 100 kHz	12	14
100 kHz to 1 MHz	12	14
1 MHz to 5 MHz	10	13
5 MHz to 10 MHz	9	11
10 MHz to 50 MHz	8	10
50 MHz to 100 MHz	8	10

[1] Values apply to all ports. Ports 2 and 4 typically 1 dB higher.

Table 46. Typical Output Power Range of SRC3 on Rear Panel (dBm) - Option XSB[1]

Description	Power Range
10 MHz to 6 GHz	-65 to 9
6 GHz to 7.6 GHz	-65 to 8.5
7.6 GHz to 9.6 GHz	-65 to 8.5
9.6 GHz to 12 GHz	-65 to 6.5
12 GHz to 13.5 GHz	-65 to 7.5

[1] Option XSB requires Option 422 or Option 423.

Table 47. Power Level Accuracy (dB) at Nominal Power[1], All Options

Description	Specification		Typical	
	Ports[2] 1, 2, 3, 4	Source 2 Out 1 Source 2 Out 2	Ports[2] 1, 2, 3, 4	Source 2 Out 1 Source 2 Out 2
10 MHz to 50 MHz[3]	±1.5	±2.5	±0.40	±0.55
50 MHz to 500 MHz[3]	±1.0	±2.0	±0.20	±0.25
500 MHz to 3.2 GHz	±1.0	±2.0	±0.25	±0.25
3.2 GHz to 8.5 GHz	±1.0	±2.0	±0.40	±0.25
8.5 GHz to 10 GHz	±1.0	±2.0	±0.40	±0.25
10 GHz to 13.5 GHz	±1.2	±2.0	±0.60	±0.25
13.5 GHz to 18 GHz	±2.0	±2.5	±0.60	±1.00
18 GHz to 26.5 GHz	±2.5	±2.5	±0.80	±0.90

[1] Level accuracy at power other than nominal power, Power Level Accuracy (dB) at Nominal Power + Power Level Linearity (dB)
[2] Any port can be used as the source port. Source in filtered mode where applicable.
[3] With an LFE option installed and LFE disabled, applied to frequencies ≤ 100 MHz. Above 100 MHz, performance is the same for both LFE enabled or disabled. For LFE enabled performance ≤ 100 MHz, see Table 48.

Table 48. Power Level Accuracy (dB), All Ports, All LFE Options (LFE Enabled)

Description	Specification	Typical[1]
500 Hz to 900 Hz	--	± 0.1
900 Hz to 1 kHz	± 1.0	± 0.1
1 kHz to 10 kHz	± 1.0	± 0.1
10 kHz to 100 kHz	± 1.0	± 0.1
100 kHz to 1 MHz	± 1.0	± 0.15
1 MHz to 5 MHz	± 1.0	± 0.15
5 MHz to 10 MHz	± 1.0	± 0.2
10 MHz to 50 MHz	± 1.0	± 0.2
50 MHz to 100 MHz	± 1.0	± 0.2

Table 49. Power Level Linearity[1] (dB), All Options - Specification

Description	Ports 1, 3[2] -25 dBm ≤ P <-20 dBm	Ports 1, 3[2] -20 dBm ≤ P <-15 dBm	Ports 1, 3[2] P ≥ -15 dBm
10 MHz to 50 MHz[3]	±2.0	±1.5	±1.0
50 MHz to 500 MHz[3]	±1.5	±1.0	±1.0
500 MHz to 8.5 GHz	±1.0	±1.0	±1.0
8.5 GHz to 13.5 GHz	±1.0	±1.0	±1.0
13.5 GHz to 26.5 GHz	±1.0	±1.0	±1.0

[1] Referenced to nominal power.
[2] Either port can be used as the source port. Source in filtered mode.
[3] With an LFE option installed and LFE disabled, applied to frequencies ≤ 100 MHz. Above 100 MHz, performance is the same for both LFE enabled or disabled. For LFE enabled performance ≤ 100 MHz, see Table 52.

Table 50. Power Level Linearity[1] (dB), All Options - Specification

Description	Ports 2, 4[2] -25 dBm ≤ P <-20 dBm	Ports 2, 4[2] -20 dBm ≤ P <-15 dBm	Ports 2, 4[2] P ≥ -15 dBm
10 MHz to 50 MHz[3]	±5.0	±2.0	±1.5
50 MHz to 500 MHz[3]	±4.0	±2.0	±1.5
500 MHz to 3.2 GHz	±2.5	±1.0	±1.0
3.2 GHz to 8.5 GHz	±2.0	±1.0	±1.0
8.5 GHz to 10 GHz	±2.0	±1.0	±1.0
10 GHz to 13.5 GHz	±1.5	±1.5	±1.5
13.5 GHz to 16 GHz	±1.5	±1.5	±1.5
16 GHz to 26.5 GHz	±1.0	±1.0	±1.0

[1] Referenced to nominal power.
[2] Either port can be used as the source port.
[3] With an LFE option installed and LFE disabled, applied to frequencies ≤ 100 MHz. Above 100 MHz, performance is the same for both LFE enabled or disabled. For LFE enabled performance ≤ 100 MHz, see Table 52.

Table 51. Power Level Linearity[1] (dB), Option 22x - Specification

Description	Source 2 Out 1[2] P ≥ -15 dBm	Source 2 Out 2 -15 dBm ≤ P < -10 dBm	Source 2 Out 2 P ≥ -10 dBm
10 MHz to 500 MHz[3]	±1.0	±1.5	±1.0
500 MHz to 8.5 GHz	±1.0	±1.0	±1.0
8.5 GHz to 13.5 GHz	±1.0	±1.0	±1.0
13.5 GHz to 26.5 GHz	±1.0	±1.0	±1.0

[1] Referenced to nominal power.
[2] Source in filtered mode.
[3] With an LFE option installed and LFE disabled, applied to frequencies ≤ 100 MHz. Above 100 MHz, performance is the same for both LFE enabled or disabled. For LFE enabled performance ≤ 100 MHz, see Table 52.

Table 52. Power Level Linearity[1] (dB), All Ports, All LFE Options (LFE Enabled)

Description	Specification
500 Hz to 900 Hz	--
900 Hz to 100 MHz	±1.0

[1] Referenced to nominal power, from -25 dBm to max power.

Table 53. Power Sweep Range (dB), Options 201 or 401

Description	Specification		Typical	
	Ports[1] 1, 3	Ports[1] 2, 4	Ports[1] 1, 3	Ports[1] 2, 4
10 MHz to 50 MHz	33	38	46	44
50 MHz to 500 MHz	35	38	48	47
500 MHz to 3.2 GHz	35	38	40	45
3.2 GHz to 8.5 GHz	38	38	47	46
8.5 GHz to 10 GHz	38	38	47	46
10 GHz to 13.5 GHz	38	38	44	43
13.5 GHz to 16 GHz	38	38	44	43
16 GHz to 20 GHz	38	35	43	39
20 GHz to 24 GHz	37	32	42	38
24 GHz to 26.5 GHz	30	27	38	34

[1] Either port can be used as the source port. Source in filtered mode where applicable.

Table 54. Power Sweep Range (dB), Options 21x or 41x

Description	Specification		Typical	
	Ports[1] 1, 3	Ports[1] 2, 4	Ports[1] 1, 3	Ports[1] 2, 4
10 MHz to 50 MHz	33	38	46	44
50 MHz to 500 MHz	35	38	47	46
500 MHz to 3.2 GHz	35	38	40	45
3.2 GHz to 8.5 GHz	38	38	45	44
8.5 GHz to 10 GHz	38	38	45	44
10 GHz to 13.5 GHz	37	36	42	41
13.5 GHz to 16 GHz	37	36	42	41
16 GHz to 20 GHz	35	33	40	37
20 GHz to 24 GHz	33	32	39	36
24 GHz to 26.5 GHz	28	24	35	31

[1] Either port can be used as the source port. Source in filtered mode where applicable.

Table 55. Power Sweep Range (dB), Options 21x, 41x with 029[1]

Description	Specification		Typical	
	Port 1[2]	Port 2[2]	Port 1[2]	Port 2[2]
10 MHz to 50 MHz	32	38	45	44
50 MHz to 500 MHz	34	38	46	46
500 MHz to 3.2 GHz	34	38	39	45
3.2 GHz to 8.5 GHz	37	38	44	44
8.5 GHz to 10 GHz	37	38	44	44
10 GHz to 13.5 GHz	37	34	42	39
13.5 GHz to 16 GHz	37	34	42	39
16 GHz to 20 GHz	35	30	40	34
20 GHz to 24 GHz	33	27	39	31
24 GHz to 26.5 GHz	28	23	35	30

[1] Option 029 affects port 1 and port 2 power sweep ranges. Refer to Table 54 for ports 3 and 4.
[2] Source in filtered mode where applicable.

Table 56. Power Sweep Range (dB), Options 22x, 422, or 423

Description	Specification		Typical	
	Ports[1] 1, 3	Ports[1] 2, 4	Ports[1] 1, 3	Ports[1] 2, 4
10 MHz to 50 MHz	32	38	46	44
50 MHz to 500 MHz	33	38	47	47
500 MHz to 3.2 GHz	33	38	40	44
3.2 GHz to 8.5 GHz	38	38	46	44
8.5 GHz to 10 GHz	38	38	46	44
10 GHz to 13.5 GHz	37	35	42	41
13.5 GHz to 16 GHz	37	35	42	41
16 GHz to 20 GHz	35	32	40	37
20 GHz to 24 GHz	32	30	39	36
24 GHz to 26.5 GHz	25	23	35	31

[1] Either port can be used as the source port. Source in filtered mode where applicable.

Table 57. Power Sweep Range (dB), Option 22x

Description	Specification		Typical	
	Source 2 Out 1[1]	Source 2 Out 2	Source 2 Out 1[1]	Source 2 Out 2
10 MHz to 50 MHz	24	28	38	35
50 MHz to 500 MHz	26	32	39	38
500 MHz to 3.2 GHz	25	29	34	36
3.2 GHz to 8.5 GHz	33	33	39	39
8.5 GHz to 10 GHz	33	33	39	39
10 GHz to 13.5 GHz	31	31	38	37
13.5 GHz to 16 GHz	31	31	38	37
16 GHz to 20 GHz	30	28	36	34
20 GHz to 24 GHz	28	27	35	34
24 GHz to 26.5 GHz	22	20	31	28

[1] Source in filtered mode where applicable.

Table 58. Power Sweep Range (dB), Options 22x, 422, or 423 with 029[1]

Description	Specification		Typical	
	Port 1[2]	Port 2[2]	Port 1[2]	Port 2[2]
10 MHz to 50 MHz	31	38	45	44
50 MHz to 500 MHz	33	38	47	47
500 MHz to 3.2 GHz	33	37	40	43
3.2 GHz to 8.5 GHz	38	38	46	44
8.5 GHz to 10 GHz	38	38	46	44
10 GHz to 13.5 GHz	37	35	42	41
13.5 GHz to 16 GHz	37	35	42	41
16 GHz to 20 GHz	35	31	39	36
20 GHz to 24 GHz	31	29	37	35
24 GHz to 26.5 GHz	25	23	35	31

[1] Option 029 affects port 1 and port 2 power sweep ranges. Refer to Table 56 for ports 3 and 4.
[2] Source in filtered mode where applicable.

Table 59. Power Sweep Range (dB), Option 205

Description	Specification (dBm)		Typical (dBm)	
	Ports[1] 1, 3	Ports[1] 2, 4	Ports[1] 1, 3	Ports[1] 2, 4
10 MHz to 50 MHz[2]	25	31	39	37
50 MHz to 500 MHz[2]	28	34	44	43
500 MHz to 3.2 GHz	32	35	37	42
3.2 GHz to 8.5 GHz	36	36	45	44
8.5 GHz to 10 GHz	36	36	45	44
10 GHz to 13.5 GHz	36	36	42	41
13.5 GHz to 16 GHz	36	36	42	41
16 GHz to 20 GHz	36	33	41	37
20 GHz to 24 GHz	35	30	40	36
24 GHz to 26.5 GHz	28	25	36	32

[1] Either port can be used as the source port. Source in filtered mode where applicable.
[2] With Option 205 installed and LFE disabled, applied to frequencies ≤ 100 MHz. Above 100 MHz, performance is the same for both LFE enabled or disabled.

Table 60. Power Sweep Range (dB), Option 425

Description	Specification (dBm)		Typical (dBm)	
	Ports 1, 3	Ports 2, 4	Ports 1, 3	Ports 2, 4
10 MHz to 50 MHz[1]	30	30	38	36
50 MHz to 500 MHz[1]	33	33	42	42
500 MHz to 3.2 GHz	30	33	35	39
3.2 GHz to 10 GHz	36	36	44	42
10 GHz to 16 GHz	35	33	40	39
16 GHz to 20 GHz	33	30	38	35
20 GHz to 24 GHz	30	28	37	34
24 GHz to 26.5 GHz	23	21	33	29

[1] With option 425 installed and LFE disabled, applied to frequencies ≤ 100 MHz. Above 100 MHz, performance is the same for both LFE enabled or disabled.

Table 61. Power Sweep Range (dB), Option 425 with 029

Description	Specification (dBm)		Typical (dBm)	
	Port 1	Port 2	Port 1	Port 2
10 MHz to 50 MHz[1]	30	30	38	36
50 MHz to 500 MHz[1]	33	32	42	41
500 MHz to 3.2 GHz	30	32	35	38
3.2 GHz to 10 GHz	36	36	44	42
10 GHz to 16 GHz	35	33	40	39
16 GHz to 20 GHz	33	29	38	34
20 GHz to 24 GHz	29	27	36	33
24 GHz to 26.5 GHz	23	21	33	29

[1] With Option 425 installed and LFE disabled, applied to frequencies ≤ 100 MHz. Above 100 MHz, performance is the same for both LFE enabled or disabled. For LFE enabled performance ≤ 100 MHz, see Table 62.

Table 62. Power Sweep Range (dB) –All LFE Options (LFE Enabled)

Description	Specification	Typical[1]
500 Hz to 900 Hz	--	39
900 Hz to 1 kHz	35	40
1 kHz to 10 kHz	37	40
10 kHz to 100 kHz	37	41
100 kHz to 1 MHz	37	41
1 MHz to 5 MHz	35	40
5 MHz to 10 MHz	34	38
10 MHz to 50 MHz	33	37
50 MHz to 100 MHz	33	37

Table 63. Nominal Power (Preset Power, dBm)

Description	Options 201, 401, 205	Options 21x, 22x, 41x, 42x	Option 22x		Options 22x, 42x	
	All Ports[1]	Ports 1, 2, 3, 4[1]	Source 2 Out 1	Source 2 Out 2	Source 1 Port 1 Combine Mode	Source 2 Port 1 Combine Mode
N5241B	0	-5	-5	-5	-5	-5
N5242B	0	-5	-5	-5	-5	-5
N5249B	0	-5	-5	-5	-5	-5

[1] Any port can be used as the source port.

Table 64. Power Resolution and Maximum/Minimum Settable Power, All Ports[1]

Description	Specification (dB)	Typical (dBm)		
	All Options	All Options	Options 201, 401	Options 21x, 41x, 22x, 42x
Power Resolution	0.01	--	--	--
Maximum Settable Power[2]	--	30	--	--
Minimum Settable Power[2]	--	--	-30	-95

[1] Any port can be used as the source port.
[2] For Option XSB power range, see Table 46.

Table 65. 2nd and 3rd Harmonics at Max Specified Power (dBc), All Options - Typical

Listed frequency is fundamental frequency; test at max specified power.

Description	2nd Harmonic		3rd Harmonic	
	Ports 1, 3 Source 2 Out 1[1]	Ports 2, 4 Source 2 Out 2	Ports 1, 3 Source 2 Out 1[1]	Ports 2, 4 Source 2 Out 2
10 MHz to 50 MHz[2]	-42	-14	-47	-13
50 MHz to 2 GHz[2]	-56	-21	-60	-15
2 GHz to 8.85 GHz	-60	-18	-65	-18
8.85 GHz to 13.25 GHz	-60	-18	--	--

[1] At the same level as the maximum specified power for Port 1.
[2] With an LFE option installed and LFE disabled, applied to frequencies ≤ 100 MHz. Above 100 MHz, performance is the same for both LFE enabled or disabled. For LFE enabled performance ≤ 100 MHz, see Table 66.

Table 66. 2nd and 3rd Harmonics at Max Specified Power (dBc), All Ports, All LFE Options (LFE Enabled) - Typical

Listed frequency is fundamental frequency; test at max specified power.

Description	2nd Harmonic	3rd Harmonic
500 Hz to 900 Hz	-32	-31
900 Hz to 1 kHz	-22	-23
1 kHz to 10 kHz	-22	-23
10 kHz to 100 kHz	-22	-23
100 kHz to 1 MHz	-25	-22
1 MHz to 5 MHz	-28	-24
5 MHz to 10 MHz	-27	-22
10 MHz to 33 MHz	-28	-21
33 MHz to 50 MHz	-28	--

Table 67. Non-Harmonic Spurs[1] at Nominal Power (dBc), All Options, All Ports – Typical

Listed frequency is Source CW frequency, tested at 0 dBm.

Description	Non-Harmonic	¨ 600 MHz Tracking Spur
10 MHz to 1 GHz	-80	-80
1 GHz to 10 GHz	-85	-81
10 GHz to 20 GHz	-82	-75
20 GHz to 26.5 GHz	-80	-70

[1] Non-harmonic spurs are negligible with Option 425 installed and LFE enabled.

Tracking Spurs (Linear Frequency Scale)

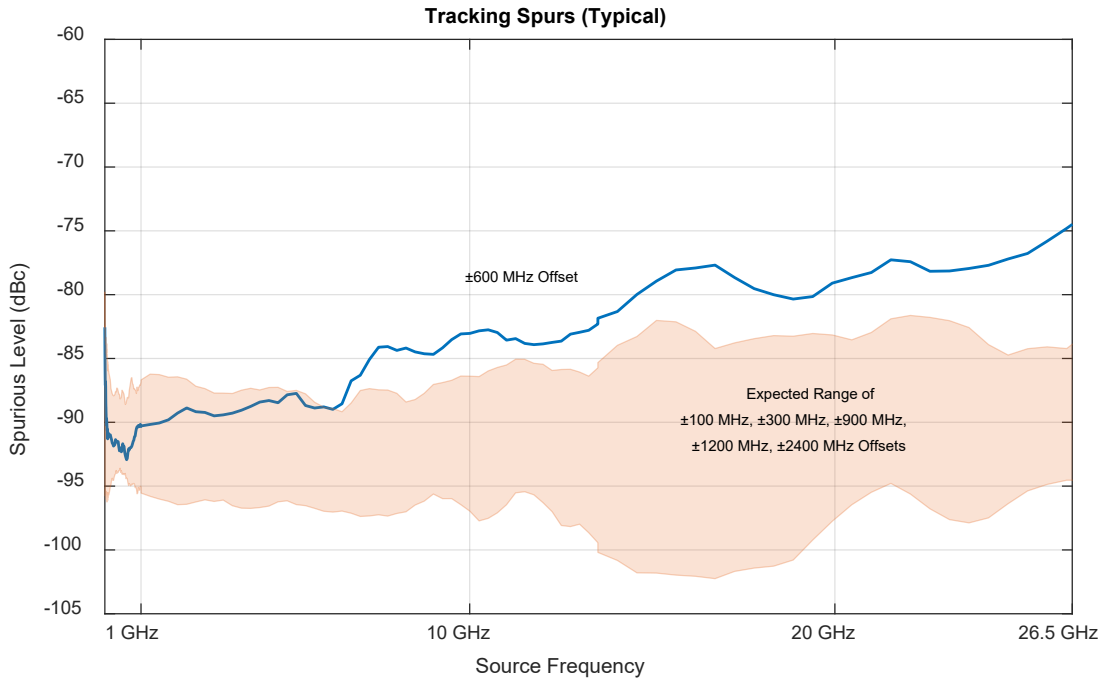

Tracking Spurs (Logarithmic Frequency Scale)

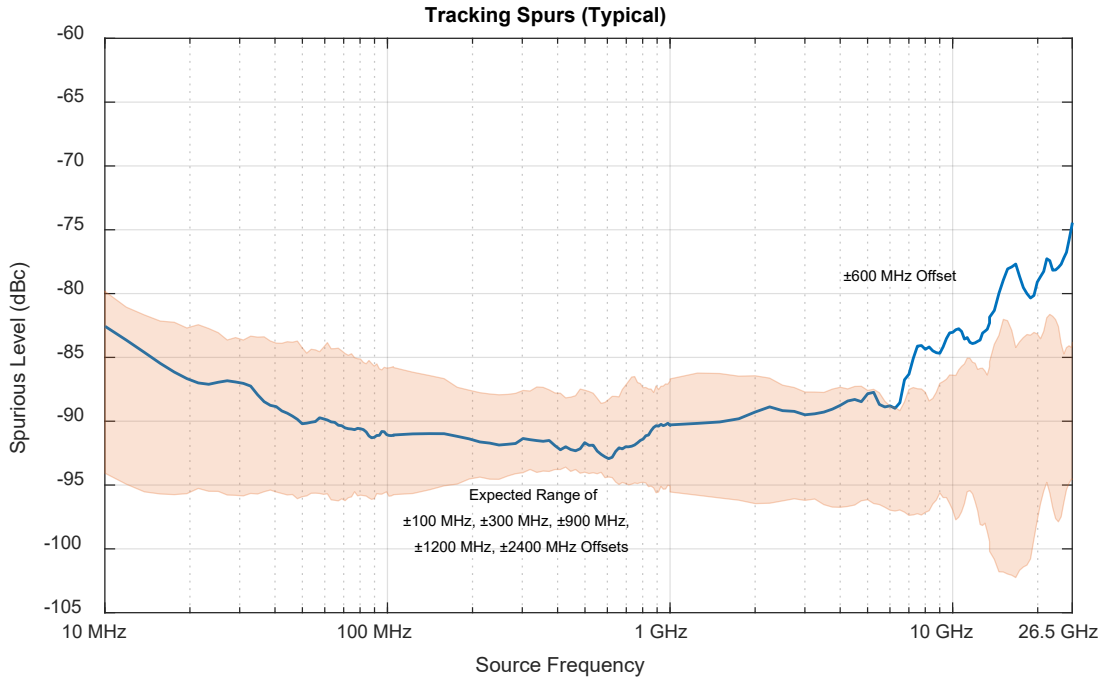

Table 68. Phase Noise (dBc/Hz), All Options, with UNY, Port 1, 3, Src2Out1 - Typical

CW Frequency	100 Hz Offset	1 kHz Offset	10 kHz Offset	100 kHz Offset	1 MHz Offset	10 MHz Offset
1 GHz	-112	-132	-137	-143	-145	-144
5 GHz	-102	-123	-132	-135	-147	-149
10 GHz	-96	-116	-126	-130	-142	-146
20 GHz	-91	-111	-118	-123	-135	-139
26.5 GHz	-87	-106	-115	-121	-131	-136

Table 69. Phase Noise (dBc/Hz), All Options, with UNY, Port 2, 4, Src2Out2 - Typical

CW Frequency	100 Hz Offset	1 kHz Offset	10 kHz Offset	100 kHz Offset	1 MHz Offset	10 MHz Offset
1 GHz	-111	-121	-132	-145	-149	-149
5 GHz	-103	-122	-128	-134	-145	-149
10 GHz	-96	-112	-120	-127	-140	-147
20 GHz	-90	-108	-116	-123	-134	-139
26.5 GHz	-86	-106	-114	-121	-131	-135

Phase Noise with Option UNY

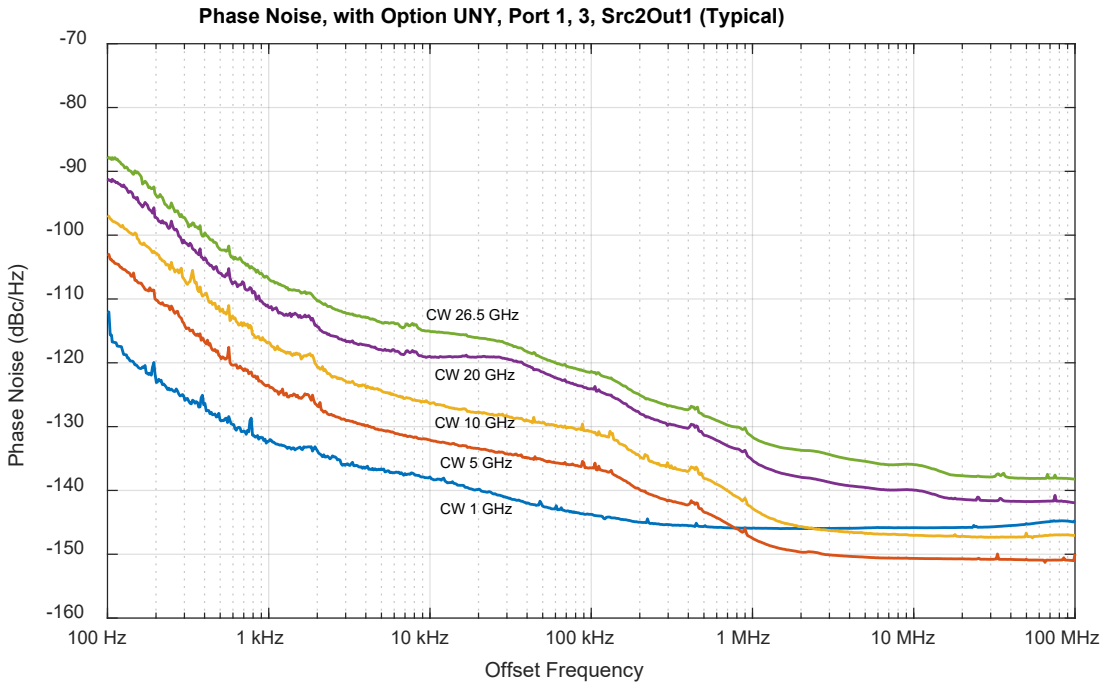

Table 70. Phase Noise (dBc/Hz), All LFE Options (LFE Enabled), with UNY, All Ports - Typical

Description	1 kHz Offset	10 kHz Offset	100 kHz Offset	1 MHz Offset
500 Hz to 100 MHz	-120	-130	-125	-135

Table 71. Phase Noise (dBc/Hz), All Options, without UNY, All Ports - Typical

CW Frequency	100 Hz Offset	1 kHz Offset	10 kHz Offset	100 kHz Offset	1 MHz Offset	10 MHz Offset
1 GHz	-94	-116	-130	-141	-145	-144
5 GHz	-83	-106	-119	-128	-139	-147
10 GHz	-78	-100	-113	-122	-133	-142
20 GHz	-72	-94	-107	-116	-127	-135
26.5 GHz	-67	-90	-104	-114	-124	-132

Phase Noise, CW 10 GHz, with Option UNY and without Option UNY

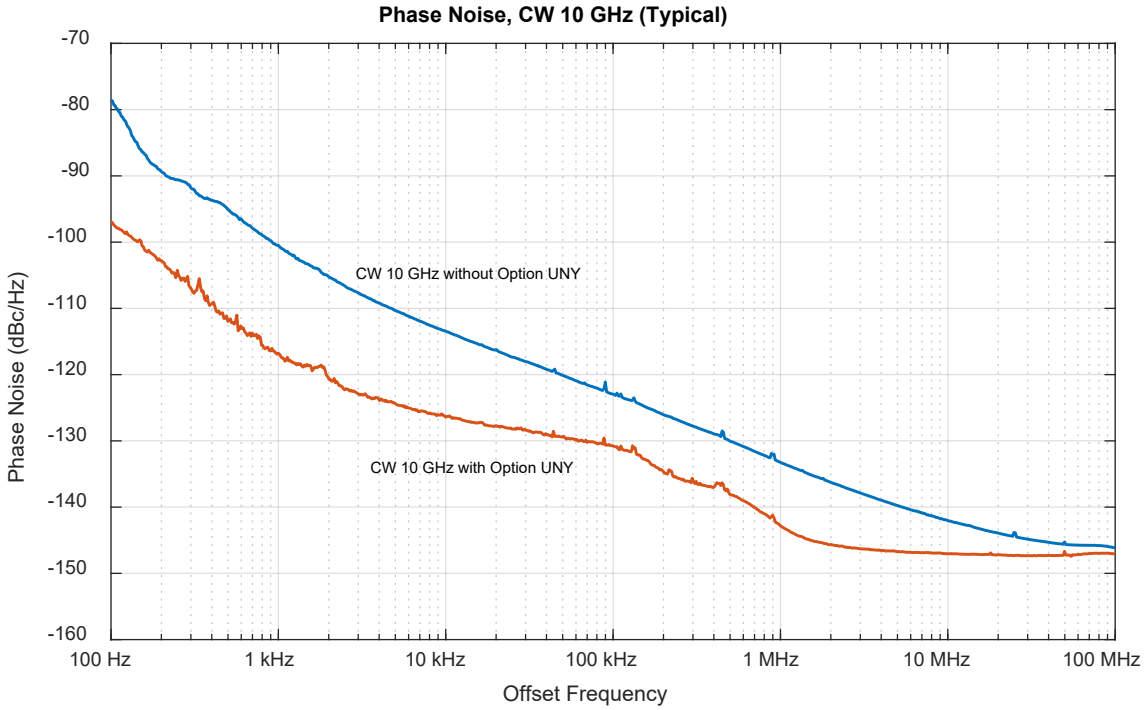

Test Port Input

Table 72. Noise Floor[1] (dBm) @ 10 Hz IFBW, All Options, All Ports

Description	Specification		Typical	
	Test Port	Direct Receiver Access Input	Test Port	Direct Receiver Access Input
10 MHz to 50 MHz[2]	-80	--	-87	-130
50 MHz to 100 MHz[2]	-90	--	-95	-128
100 MHz to 500 MHz[2]	-104	--	-110	-132
500 MHz to 2 GHz	-114	--	-117	-133
2 GHz to 8.5 GHz	-114	--	-117	-129
8.5 GHz to 13.5 GHz	-114	--	-117	-129
13.5 GHz to 20 GHz	-114	--	-117	-129
20 GHz to 24 GHz	-110	--	-115	-122
24 GHz to 26.5 GHz	-107	--	-113	-119

[1] Total average (rms) noise power calculated as the mean value of a linear magnitude trace expressed in dBm.
[2] With an LFE option installed and LFE disabled, applied to frequencies ≤ 100 MHz. Above 100 MHz, performance is the same for both LFE enabled or disabled. For LFE enabled performance ≤ 100 MHz, see Table 73.

Table 73. Noise Floor (dBm) @ 10 Hz IFBW, All LFE Options (LFE Enabled)

Description	Specification	Typical
500 Hz to 900 Hz	--	-93
900 Hz to 1 kHz	-90	-96
1 kHz to 10 kHz	-91	-96
10 kHz to 100 kHz	-101	-105
100 kHz to 1 MHz	-107	-110
1 MHz to 5 MHz	-108	-112
5 MHz to 10 MHz	-102	-106
10 MHz to 50 MHz	-102	-106
50 MHz to 100 MHz	-102	-106

[1]May be degraded at 100 MHz due to spurious receiver residuals.

Table 74. 0.1 dB Compression, All Options, All Ports - Typical

Description	Test Port Power (dBm)
10 MHz to 500 MHz[1]	--
500 MHz to 8.5 GHz	13
8.5 GHz to 13.5 GHz	13
13.5 GHz to 16 GHz	13
16 GHz to 20 GHz	12
20 GHz to 24 GHz	10.5
24 GHz to 26.5 GHz	10

[1] With an LFE option installed and LFE disabled, applied to frequencies ≤ 100 MHz. Above 100 MHz, performance is the same for both LFE enabled or disabled. For LFE enabled performance ≤ 100 MHz, see Table Table 75.

Table 75. 0.1 dB Compression, All Ports, All LFE Options (LFE Enabled) - Typical

Description	Test Port Power (dBm)
500 Hz to 900 Hz	13
900 Hz to 1 kHz	13
1 kHz to 10 kHz	13
10 kHz to 100 kHz	13
100 kHz to 1 MHz	13
1 MHz to 5 MHz	11
5 MHz to 10 MHz	13
10 MHz to 50 MHz	14
50 MHz to 100 MHz	14

Table 76. Compression (dB) at 8 dBm Test Port Power, All Options, All Ports

Description	Specification
10 MHz to 500 MHz[1]	--
500 MHz to 8.5 GHz	<0.17
8.5 GHz to 13.5 GHz	<0.17
13.5 GHz to 16 GHz	<0.17
16 GHz to 24 GHz	<0.23
24 GHz to 26.5 GHz	<0.29

[1] With an LFE option installed and LFE disabled, applied to frequencies ≤ 100 MHz. Above 100 MHz, performance is the same for both LFE enabled or disabled.

Table 77. Compression, All Ports, All LFE Options (LFE Enabled)- Specification

Description	Test Port Power (dBm)	Receiver Compression
	All Options	Magnitude (dB)
500 Hz to 900 Hz	--	--
900 Hz to 1 kHz	10	0.2
1 kHz to 10 kHz	12	0.2
10 kHz to 100 kHz	12	0.2
100 kHz to 1 MHz	12	0.2
1 MHz to 5 MHz	10	0.2
5 MHz to 10 MHz	9	0.2
10 MHz to 50 MHz	8	0.2
50 MHz to 100 MHz	8	0.2

Table 78. Trace Noise[1] Magnitude (dB rms), All Options, All Ports

Description	Specification	Typical		
	1 kHz IFBW	1 kHz IFBW	100 kHz IFBW	600 kHz IFBW
10 MHz to 100 MHz[2]	0.007	0.0039	0.040	0.140
100 MHz to 8.5 GHz[2]	0.002	0.0005	0.005	0.011
8.5 GHz to 13.5 GHz	0.002	0.0005	0.005	0.011
13.5 GHz to 16 GHz	0.002	0.0005	0.005	0.011
16 GHz to 22.5 GHz	0.002	0.0006	0.005	0.012
22.5 GHz to 24 GHz	0.003	0.0014	0.008	0.020
24 GHz to 26.5 GHz	0.005	0.0020	0.008	0.020

[1] Ratioed measurement, nominal power at test port.
[2] With an LFE option installed and LFE disabled, applied to frequencies ≤ 100 MHz. Above 100 MHz, performance is the same for both LFE enabled or disabled. For LFE enabled performance ≤ 100 MHz, see Table 79.

Table 79. Trace Noise[1] Magnitude (dB rms), All Ports, All LFE Options (LFE Enabled)

Description	Specification		Typical			
	100 Hz IFBW	1 kHz IFBW	100 Hz IFBW	1 kHz IFBW	100 kHz IFBW	600 kHz IFBW
500 Hz to 900 Hz	--	--	0.002	--	--	--
900 Hz to 4 kHz	0.004	--	0.001	--	--	--
4 kHz to 300 kHz	--	0.004	--	0.002	--	--
300 kHz to 2 MHz	--	0.004	--	0.001	0.01	--
2 MHz to 100 MHz	--	0.004	--	0.001	0.01	0.025

[1] Ratioed measurement, nominal power at test port.

Table 80. Trace Noise[1] Phase (deg rms), All Options, All Ports

Description	Specification	Typical		
	1 kHz IFBW	1 kHz IFBW	100 kHz IFBW	600 kHz IFBW
10 MHz to 100 MHz[2]	0.051	0.0261	0.266	1.053
100 MHz to 8.5 GHz[2]	0.015	0.0041	0.030	0.075
8.5 GHz to 13.5 GHz	0.015	0.0041	0.030	0.075
13.5 GHz to 16 GHz	0.042	0.0124	0.030	0.075
16 GHz to 22.5 GHz	0.042	0.0135	0.033	0.082
22.5 GHz to 26.5 GHz	0.054	0.0225	0.057	0.139

[1] Ratioed measurement, nominal power at test port.
[2] With an LFE option installed and LFE disabled, applied to frequencies ≤ 100 MHz. Above 100 MHz, performance is the same for both LFE enabled or disabled. For LFE enabled performance ≤ 100 MHz, see Table 81.

Table 81. Trace Noise[1] Phase (deg rms), All Ports, All LFE Options (LFE Enabled)

Description	Specification		Typical			
	100 Hz IFBW	1 kHz IFBW	100 Hz IFBW	1 kHz IFBW	100 kHz IFBW	600 kHz IFBW
500 Hz to 900 Hz	--	--	0.012	--	--	--
900 Hz to 4 kHz	0.03	--	0.008	--	--	--
4 kHz to 300 kHz	--	0.03	--	0.014	--	--
300 kHz to 2 MHz	--	0.03	--	0.007	0.064	--
2 MHz to 100 MHz	--	0.03	--	0.007	0.068	0.166

[1] Ratioed measurement, nominal power at test port.

Table 82. Reference Level - Specification

Description	Magnitude (dB)	Phase (°)
Range	±500	±500
Resolution	0.001	0.01

Table 83. Stability[1], All Options - Typical

Description	Magnitude (dB/°C)	Phase (°/°C)
10 MHz to 50 MHz[2]	0.01	0.29
50 MHz to 500 MHz[2]	0.01	0.06
500 MHz to 3.2 GHz	0.01	0.07
3.2 GHz to 8.5 GHz	0.02	0.13
8.5 GHz to 10 GHz	0.02	0.13
10 GHz to 13.5 GHz	0.02	0.13
13.5 GHz to 16 GHz	0.02	0.13
16 GHz to 20 GHz	0.03	0.40
20 GHz to 24 GHz	0.03	0.54
24 GHz to 26.5 GHz	0.04	0.56

[1] Stability is defined as a ratio measurement made at the test port.
[2] With an LFE option installed and LFE disabled, applied to frequencies ≤ 100 MHz. Above 100 MHz, performance is the same for both LFE enabled or disabled. For LFE enabled performance ≤ 100 MHz, see Table 84.

Table 84. Stability[1], Option 425 (LFE Enabled) - Typical

Description	Magnitude (dB/°C)	Phase (°/°C)
500 Hz to 900 Hz	0.010	0.2
900 Hz to 1 kHz	0.010	0.2
1 kHz to 10 kHz	0.010	0.2
10 kHz to 100 kHz	0.010	0.2
100 kHz to 1 MHz	0.010	0.1
1 MHz to 5 MHz	0.010	0.1
5 MHz to 10 MHz	0.010	0.1
10 MHz to 50 MHz	0.010	0.1
50 MHz to 100 MHz	0.020	0.1

[1] Stability is defined as a ratio measurement made at the test port.

Table 85. Damage Input Level, All Options - Specification

Description	RF (dBm)	DC (V)
Test Ports 1, 2, 3, 4	+30 (+20[2])	+40 (0[1]) (50[2])
Source 2 Out 1, Source 2 Out 2	+30	0 / +7[3]
Test Port 2, Noise Mode (Option 029)	+25	+40 (0[1])

[1] Specification for options 217, 222, 417, and 422.
[2] Specification for options 205 and 425.
[3] Option 222 = 0 VDC; Option 224 = +7 VDC.

Noise Receiver Input (Option 029 only)

NOTE Option 029 operation does not apply with LFE enabled.

Table 86. Noise Receiver Bandwidth

Description	Allowable Bandwidths
10 MHz to 25 MHz	800 kHz, 2 MHz
25 MHz to 60 MHz	800 kHz, 2/4 MHz
60 MHz to 150 MHz	800 kHz, 2/4/8 MHz[1]
150 MHz to 26.5 GHz	800 kHz, 2/4/8/24 MHz[1]

[1] 8 and 24 MHz bandwidths are available only with calibration using noise source.

Table 87. Receiver Noise Figure (dB), Port 2, at 4 MHz BW, High Gain Setting

Description	Specification	Typical
10 MHz to 200 MHz	11.0	--
200 MHz to 1.3 GHz	12.0	--
1.3 GHz to 2.0 GHz	14.0	--
2.0 GHz to 8.5 GHz	14.5	--
8.5 GHz to 13.5 GHz	14.5	--
13.5 GHz to 20 GHz	14.5	--
20 GHz to 26.5 GHz	17.0[1]	--

[1] Degraded by 1.5 dB with 24 MHz BW.

Table 88. Receiver Noise Figure (dB), Port 2, at 4 MHz BW, High Gain Setting, Option 425

Description	Specification	Typical
10 MHz to 200 MHz	18.5	15
200 MHz to 1.3 GHz	17.5	14
1.3 GHz to 2.0 GHz	16	14
2.0 GHz to 8.5 GHz	17	14
8.5 GHz to 13.5 GHz	17	13
13.5 GHz to 20 GHz	17.5	14
20 GHz to 26.5 GHz	19.5[1]	16

[1] Degraded by 1.5 dB with 24 MHz BW.

Table 89. Noise Figure Trace Noise[1] (dB rms) at 4 MHz BW

Description	Specification			Typical		
	Low Gain Setting	Medium Gain Setting	High Gain Setting	Low Gain Setting	Medium Gain Setting	High Gain Setting
10 MHz to 15 MHz	0.30	0.30	0.10	0.15	0.15	0.07
15 MHz to 3 GHz	0.10	0.10	0.10	0.07	0.07	0.07
3 GHz to 8.5 GHz	0.11	0.10	0.10	0.07	0.07	0.07
8.5 GHz to 13.5 GHz	0.11	0.10	0.10	0.07	0.07	0.07
13.5 GHz to 26.5 GHz	0.11	0.10	0.10	0.07	0.07	0.07

[1] Trace noise magnitude performance on noise figure trace or sometime called noise jitter, 201 points, 1 noise average, port 2 terminated. May typically be degraded at frequencies below 500 MHz due to spurious noise receiver residuals.

Table 90. Noise Receiver Linearity (dB) at 4 MHz BW - Specification

Power Range (dBm)			Specification
Low Gain Setting Reference to -60dBm	Medium Gain Setting Reference to -70 dBm	High Gain Setting Reference to -80 dBm	
-39 to -64	-50 to -76	-58 to -84	±0.05
-64 to -70	-76 to -86	-84 to -92	±0.10

Table 91. Noise Receiver Input Range - Specification

Description	Max DUT NF + Gain (dB)[1]			Max Input Power (dBm) for <0.1 dB Compression[2]		
	High Gain Setting	Medium Gain Setting	Low Gain Setting	High Gain Setting	Medium Gain Setting	Low Gain Setting
500 MHz to 3 GHz	32	44	55	≤-57	≤-45	≤-34
3 GHz to 8.5 GHz	46	57	68	≤-43	≤-32	≤-21
8.5 GHz to 13.5 GHz	46	57	68	≤-43	≤-32	≤-21
13.5 GHz to 26.5 GHz	46	57	68	≤-43	≤-32	≤-21

[1] Limited by 0.1 dB receiver compression. Applies to devices with bandwidth <400 MHz. For devices with higher bandwidths, calculate the DUT output noise power as -174 dBm + 10*log10(B) + Gain (dB) + NF (dB), where B is the bandwidth of the DUT in Hz, and use the Max Input Power specification.
[2] Derived from ensuring < 0.25 dB compression with a CW signal 5 dB higher than the stated max input power value for 0.1 dB compression. Referenced to test port 2.

Phase Noise Measurement Performance (with S930317B phase noise measurement application)[1]

- Offset frequency range: 0.1 Hz to 10 MHz
- Sweep speed (typical): 34 seconds (1 Hz to 10 MHz offset in Normal mode)

Table 92. Absolute Phase Noise Sensitivity (dBc/Hz), in Best mode - Supplemental Performance Data [2]

Input Power level: +5 dBm (-5 dBm at 50 GHz)

Phase Noise	Offset Frequency								
Input Frequency	1 Hz	10 Hz	100 Hz	1 kHz	10 kHz	100 kHz	300 kHz	1 MHz	10 MHz
1 GHz	-55	-88	-112	-127	-132	-134	-134	-134	-134
10 GHz	-36	-69	-97	-117	-124	-130	-132	-136	-137
20 GHz	-31	-64	-90	-111	-120	-124	-125	-132	-134
40 GHz	-23	-58	-84	-104	-113	-117	-123	-125	-129
50 GHz	-18	-54	-81	-100	-109	-113	-116	-121	-123

Table 93. Absolute AM Noise Sensitivity (dBc/Hz), in Best mode - Supplemental Performance Data

Input Power level: +5 dBm (-5 dBm at 50 GHz)

AM Noise	Offset Frequency								
Input Frequency	1 Hz	10 Hz	100 Hz	1 kHz	10 kHz	100 kHz	300 kHz	1 MHz	10 MHz
1 GHz	-96	-104	-110	-119	-128	-132	-132	-135	-137
10 GHz	-97	-104	-110	-118	-128	-134	-135	-138	-139
20 GHz	-96	-104	-112	-116	-125	-132	-129	-136	-136
40 GHz	-93	-102	-109	-114	-123	-127	-130	-130	-132
50 GHz	-91	-96	-105	-114	-119	-122	-117	-125	-122

1 The input frequency in the sensitivity tables in this section is limited to the highest frequency of the PNA-X model.

2 For embedded-LO frequency converters, the frequency used for the table should be that of the embedded-LO.

Absolute Phase Noise Sensitivity (dBc/Hz) - Supplemental Performance Data

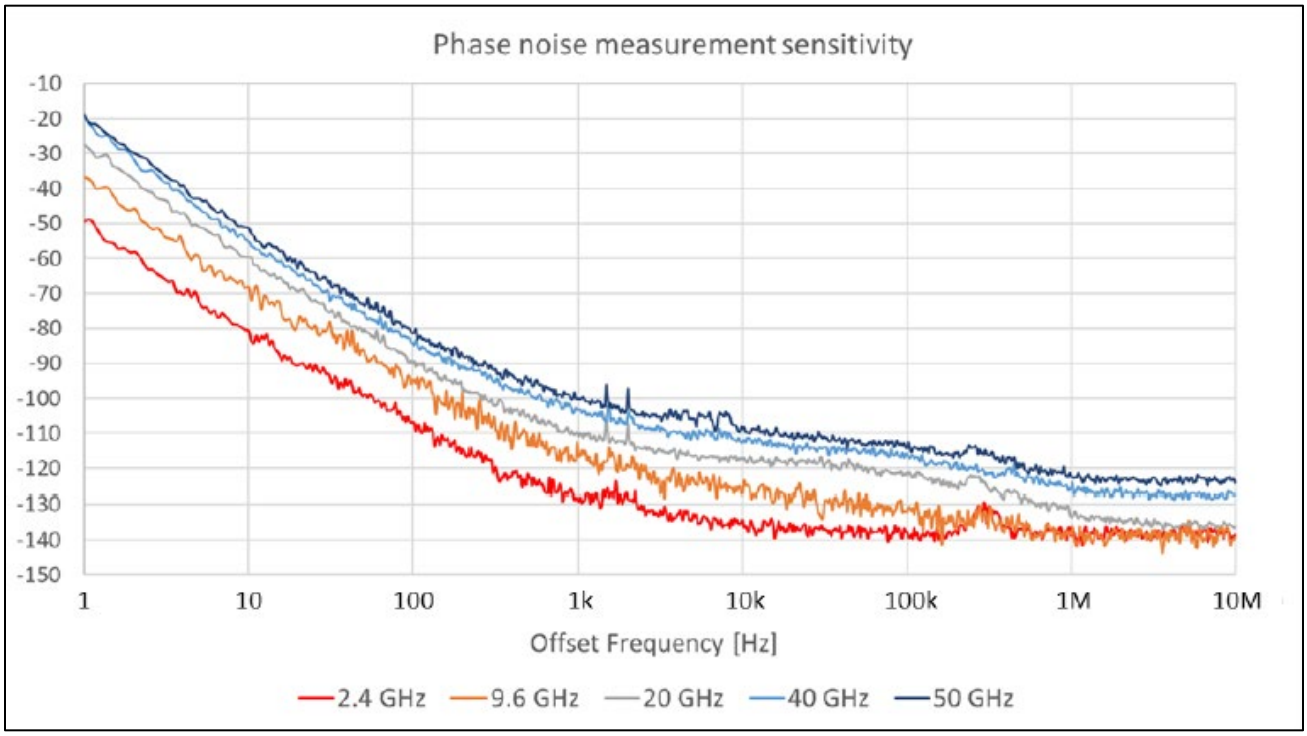

Single-Channel Residual Noise Measurement [3]

Table 94. Single-Channel Residual Phase Noise Sensitivity (dBc/Hz), with Option UNY in Best mode - Supplemental Performance Data

Input Power level: +10 dBm (+6 dBm at 40 GHz, -2 dBm at 50 GHz)

Residual Phase Noise	Offset Frequency								
Input Frequency	1 Hz	10 Hz	100 Hz	1 kHz	10 kHz	100 kHz	300 kHz	1 MHz	10 MHz
1 GHz	-102	-110	-115	-123	-131	-136	-136	-137	-137
10 GHz	-92	-99	-105	-113	-122	-131	-134	-139	-140
20 GHz	-83	-93	-100	-112	-118	-125	-124	-132	-136
40 GHz	-78	-85	-93	-106	-110	-122	-126	-128	-129
50 GHz	-75	-81	-91	-102	-110	-120	-119	-125	-125

Table 95. Single-Channel Residual AM Noise Sensitivity (dBc/Hz), with Option UNY in Best mode - Supplemental Performance Data

Input Power level: +10 dBm (+6 dBm at 40 GHz, -2 dBm at 50 GHz)

Residual AM Noise	Offset Frequency								
Input Frequency	1 Hz	10 Hz	100 Hz	1 kHz	10 kHz	100 kHz	300 kHz	1 MHz	10 MHz
1 GHz	-97	-104	-112	-120	-117	-128	-130	-134	-138
10 GHz	-97	-106	-111	-120	-121	-129	-134	-137	-142
20 GHz	-99	-104	-112	-120	-123	-120	-123	-130	-136
40 GHz	-96	-102	-110	-117	-118	-128	-132	-131	-133
50 GHz	-91	-99	-109	-114	-120	-125	-118	-125	-127

3 The data is when a THRU device is connected, in other words, when the input and output frequencies are the same. The single-channel residual noise measurement is used for the phase noise measurements for frequency converting devices, and the sensitivity is determined as the absolute phase noise sensitivity at the embedded-LO frequency (Table 92). In the single-channel residual noise measurement mode, the phase or AM noise of the DUT input signal is not measured. The measurement can be done when the phase or AM noise of the signal generated by the DUT is larger than that of the DUT input signal supplied by the PNA internal signal source.

Single-Channel Residual Phase Noise Sensitivity (dBc/Hz) - Supplemental Performance Data

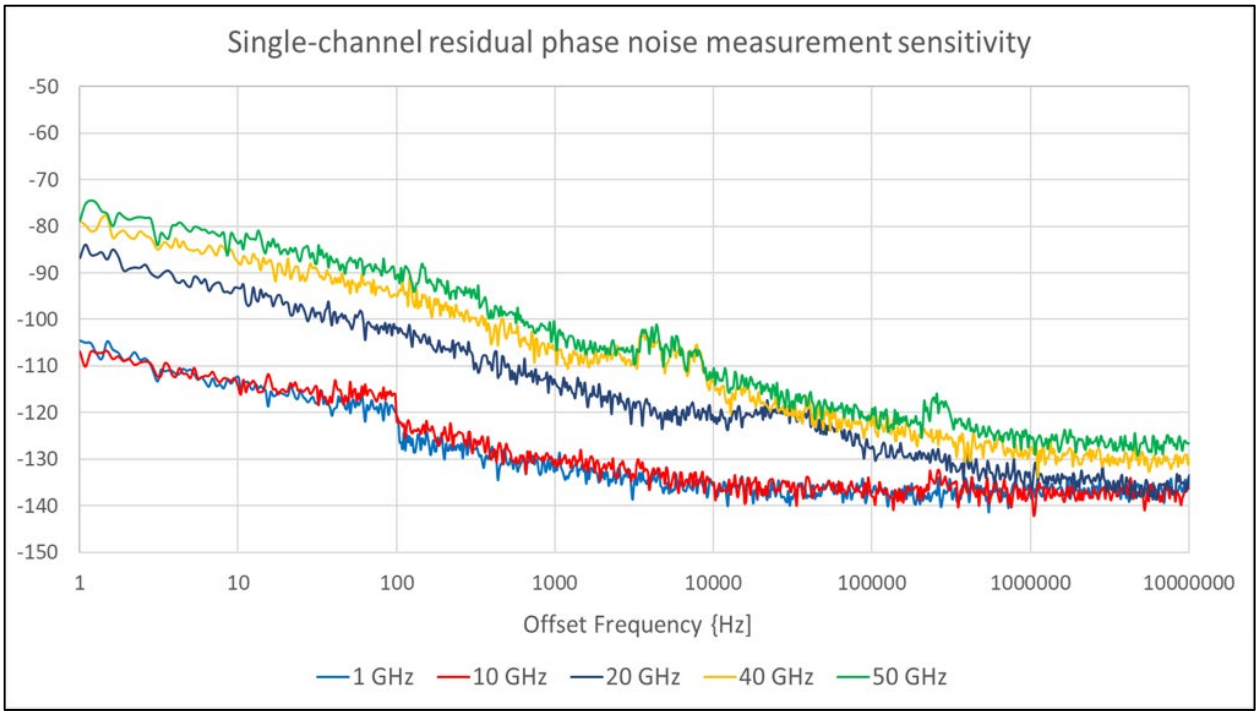

Table 96. Single-Channel Residual Phase Noise Sensitivity (dBc/Hz), without Option UNY in Best mode - Supplemental Performance Data [4]

Input Power level: +10 dBm (+6 dBm at 40 GHz, 0 dBm at 50 GHz)

Residual Phase Noise	Offset Frequency								
Input Frequency	1 Hz	10 Hz	100 Hz	1 kHz	10 kHz	100 kHz	300 kHz	1 MHz	10 MHz
1 GHz	-94	-95	-100	-120	-133	-136	-138	-137	-136
10 GHz	-77	-78	-83	-102	-114	-124	-129	-135	-138
20 GHz	-70	-74	-75	-95	-109	-118	-127	-128	-133
40 GHz	-64	-67	-70	-92	-102	-112	-116	-121	-128
50 GHz	-61	-63	-66	-87	-101	-109	-113	-119	-125

Table 97. Single-Channel Residual AM Noise Sensitivity (dBc/Hz), without Option UNY in Best mode - Supplemental Performance Data

Input Power level: +10 dBm (+6 dBm at 40 GHz, 0 dBm at 50 GHz)

Residual AM Noise	Offset Frequency								
Input Frequency	1 Hz	10 Hz	100 Hz	1 kHz	10 kHz	100 kHz	300 kHz	1 MHz	10 MHz
1 GHz	-105	-110	-123	-125	-134	-138	-139	-143	-138
10 GHz	-104	-110	-116	-125	-133	-134	-133	-141	-141
20 GHz	-104	-109	-116	-127	-127	-126	-128	-133	-137
40 GHz	-103	-110	-115	-125	-120	-130	-126	-130	-132
50 GHz	-98	-106	-111	-121	-124	-125	-122	-129	-129

4 The data is when a THRU device is connected, in other words, when the input and output frequencies are the same. The single-channel residual noise measurement is used for the phase noise measurements for frequency converting devices, and the sensitivity is determined as the absolute phase noise sensitivity at the embedded-LO frequency (Table 92). In the single-channel residual noise measurement mode, the phase or AM noise of the DUT input signal is not measured. The measurement can be done when the phase or AM noise of the signal generated by the DUT is larger than that of the DUT input signal supplied by the PNA internal signal source.

2-Channel Residual Noise Measurement for Non-Frequency Converting Devices[5]

Table 98. 2-Channel Residual Phase Noise Sensitivity (dBc/Hz) in Best mode - Supplemental Performance Data

Input Power level: +10 dBm (+6 dBm at 40 GHz, -3 dBm at 50 GHz)

Residual Phase Noise	Offset Frequency								
Input Frequency	1 Hz	10 Hz	100 Hz	1 kHz	10 kHz	100 kHz	300 kHz	1 MHz	10 MHz
1 GHz	-107	-116	-127	-134	-132	-134	-131	-133	-132
10 GHz	-101	-110	-120	-126	-134	-135	-134	-138	-136
20 GHz	-99	-105	-113	-120	-128	-131	-129	-134	-135
40 GHz	-93	-101	-109	-115	-121	-124	-125	-126	-127
50 GHz	-90	-99	-106	-113	-117	-118	-119	-120	-120

Table 99. 2-Channel Residual AM Noise Sensitivity (dBc/Hz) in Best mode - Supplemental Performance Data

Input Power level: +10 dBm (+6 dBm at 40 GHz, -3 dBm at 50 GHz)

Residual AM Noise	Offset Frequency								
Input Frequency	1 Hz	10 Hz	100 Hz	1 kHz	10 kHz	100 kHz	300 kHz	1 MHz	10 MHz
1 GHz	-99	-106	-109	-120	-131	-133	-138	-137	-134
10 GHz	-95	-105	-113	-121	-130	-134	-136	-139	-139
20 GHz	-96	-104	-113	-120	-129	-128	-129	-136	-136
40 GHz	-98	-107	-112	-118	-120	-127	-129	-130	-131
50 GHz	-93	-102	-110	-115	-120	-121	-119	-122	-122

5 Both the phase or AM noise of the DUT input signal and that of the DUT output signal are measured.

2-Channel Residual Phase Noise Sensitivity (dBc/Hz) - Supplemental Performance Data

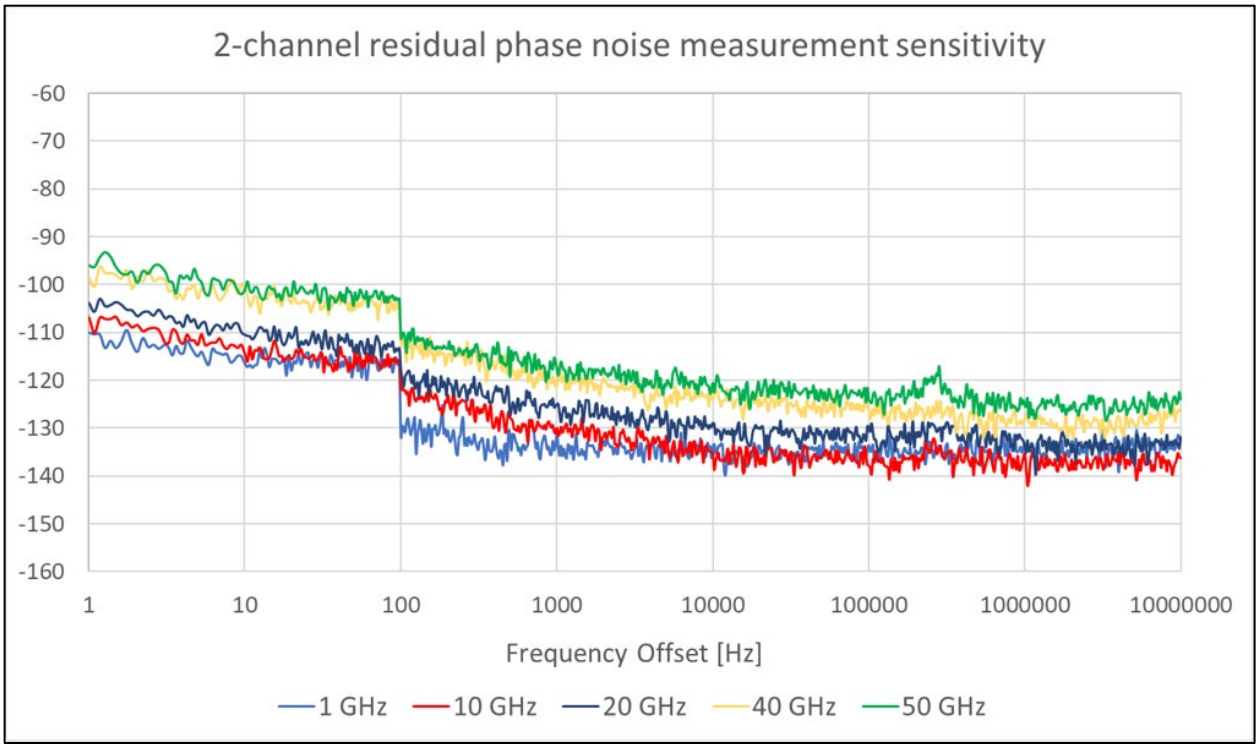

Dynamic Accuracy

Table 100. Dynamic Accuracy - Specification

Standard receiver accuracy of the test port input power reading relative to the reference input power level. It is verified with the following measurements:

- Compression over frequency
- IF linearity at a single frequency of 99.6 MHz or 1.998765 GHz using a reference level of -20 dBm for an input power range of 0 to -60 dBm. For value below -60 dBm, refer to “VNA Receiver Dynamic Accuracy Specifications and Uncertainties”.

Applies to the N5249B (all serial numbers) and N5241B, N5242B with following serial numbers:

N5241B and N5241BS: MY5241/SG5241/US5241and above
N5242B and N5242BS: MY5242/SG5242/US5242 and above

Please download our free Uncertainty Calculator from http://www.keysight.com/find/na_calculator to generate the curves for your PNA.

Dynamic Accuracy, 900 Hz, All LFE Options (LFE Enabled) - Specification

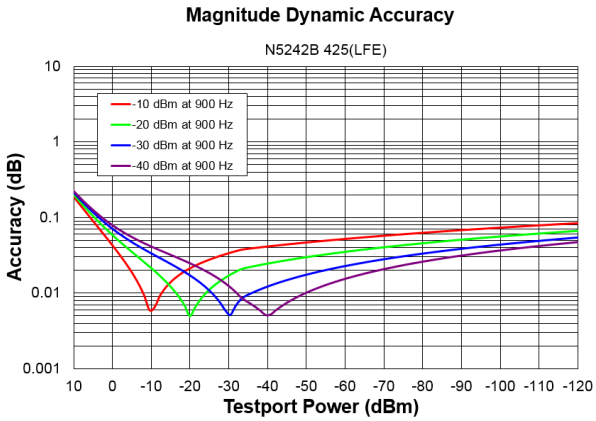

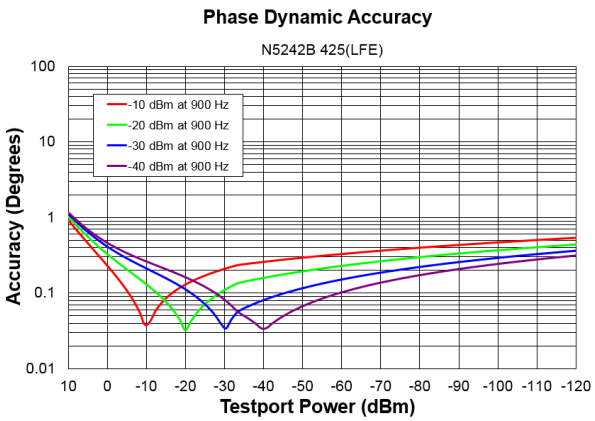

Dynamic Accuracy, 10 MHz, All LFE Options (LFE Enabled) - Specification

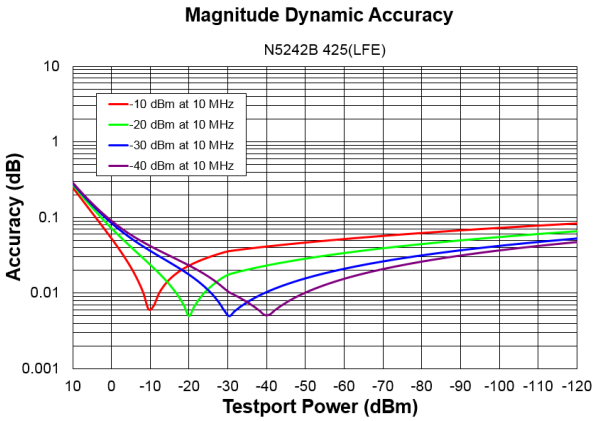

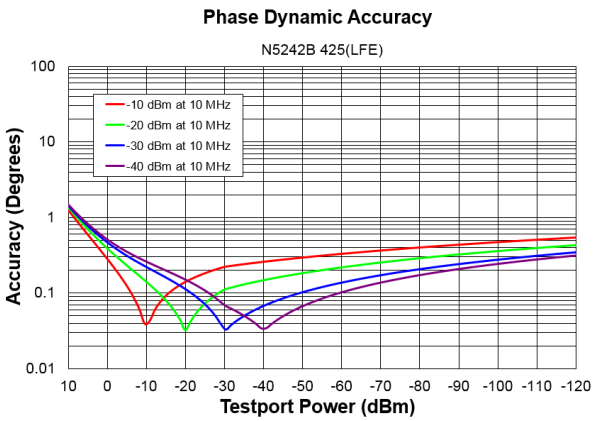

Dynamic Accuracy, 100 MHz, All LFE Options (LFE Enabled) - Specification

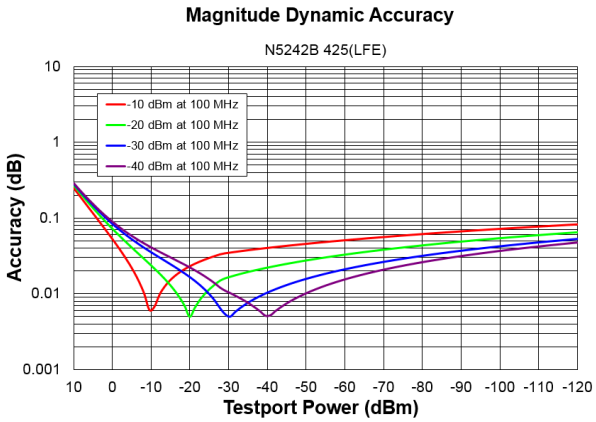

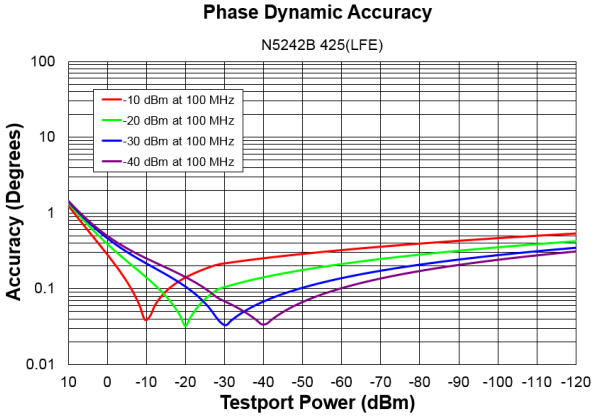

Dynamic Accuracy, 10 MHz

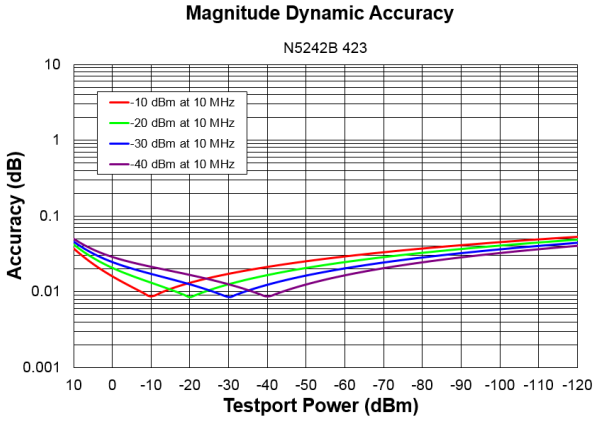

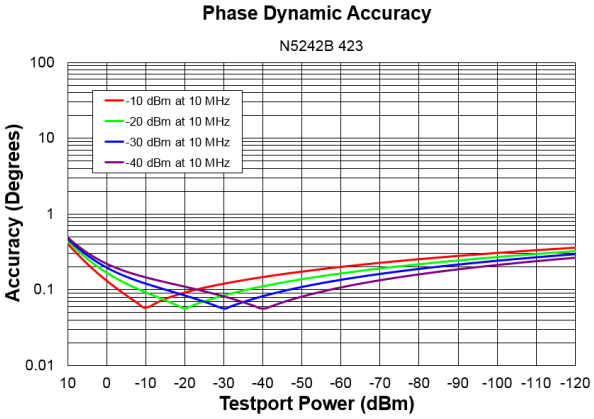

Dynamic Accuracy, 50 MHz

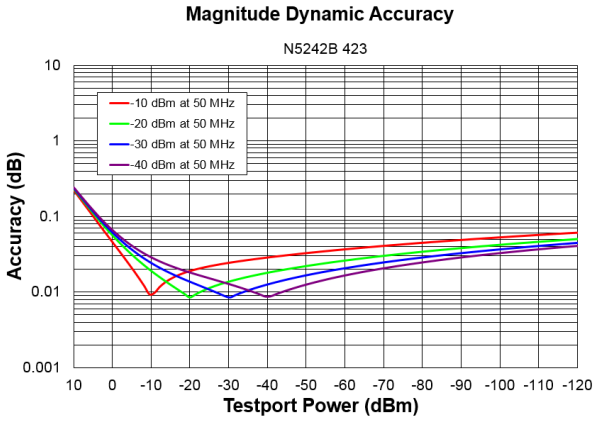

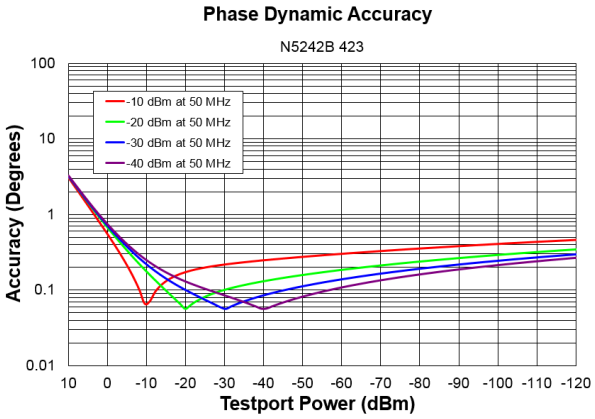

Dynamic Accuracy, 1 GHz

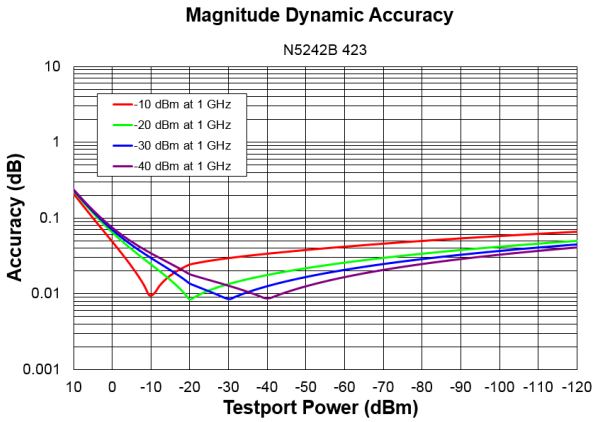

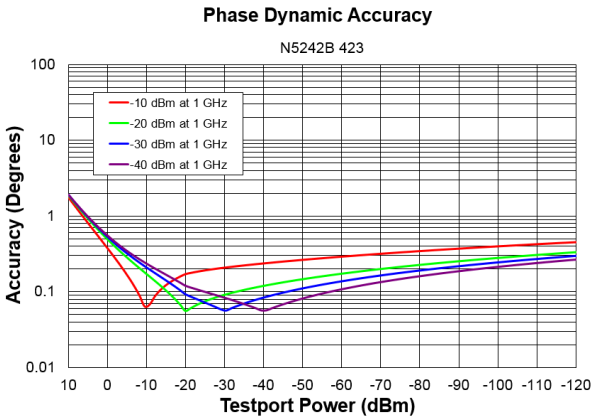

Dynamic Accuracy, 8.5 GHz

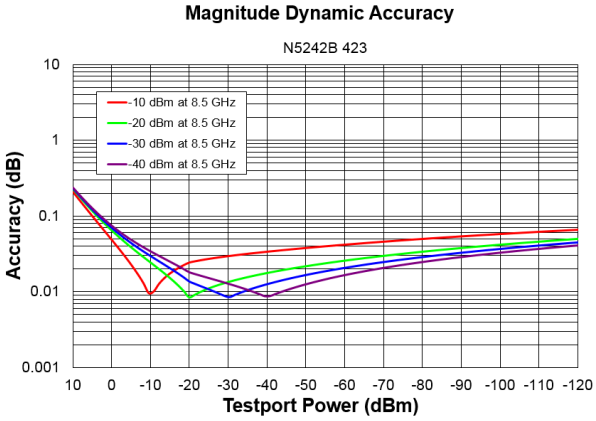

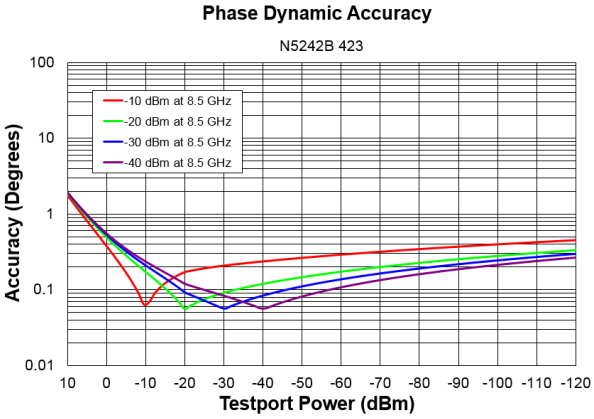

Dynamic Accuracy, 10 GHz

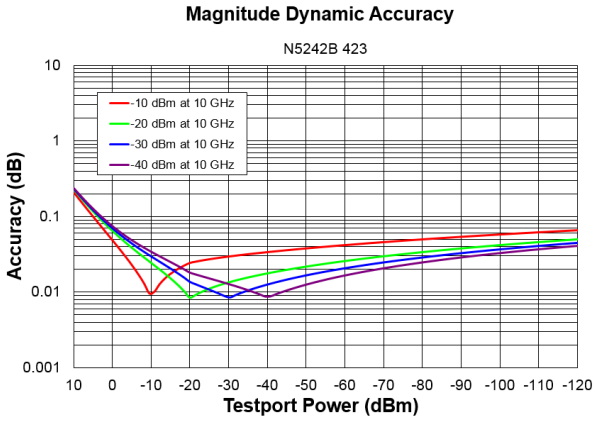

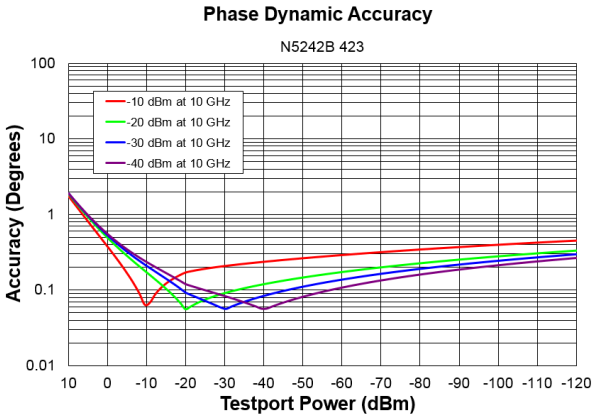

Dynamic Accuracy, 13.5 GHz

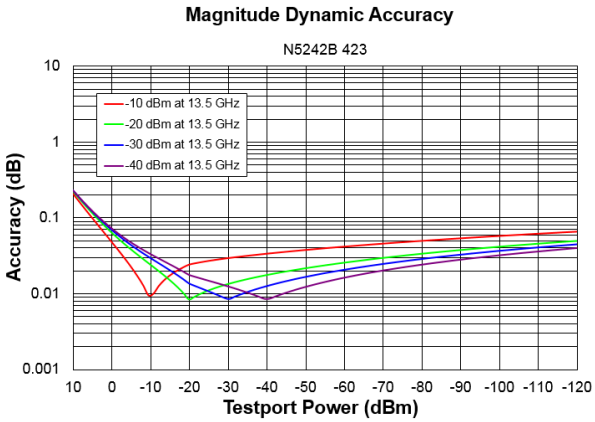

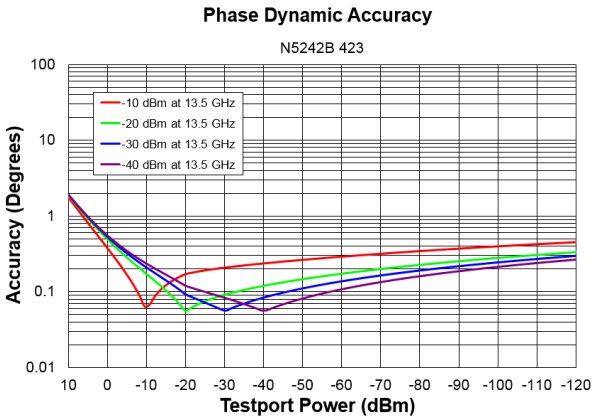

Dynamic Accuracy, 20 GHz

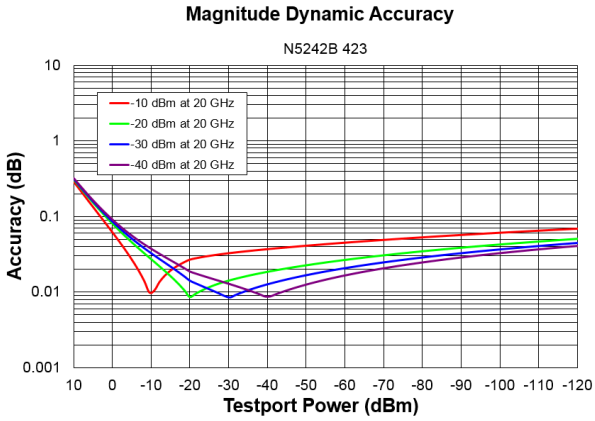

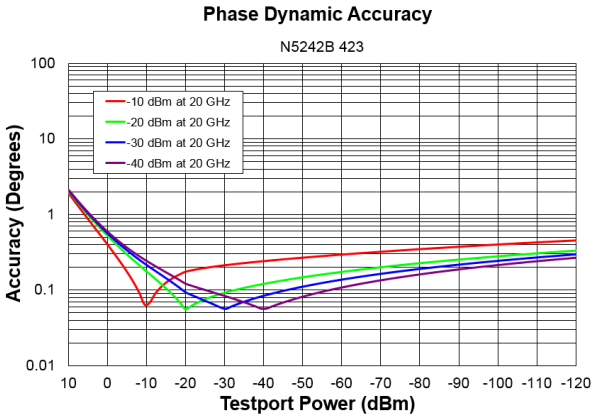

Dynamic Accuracy, 26.5 GHz

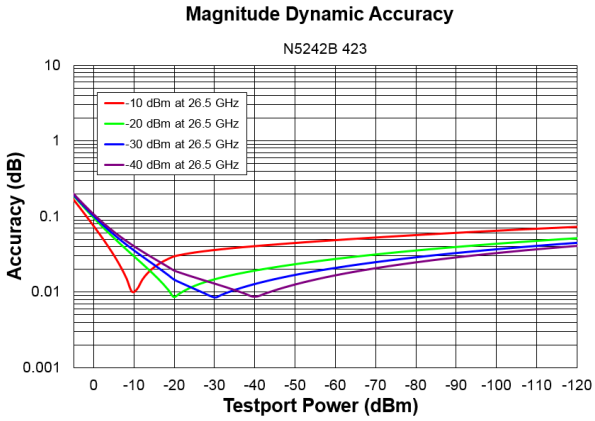

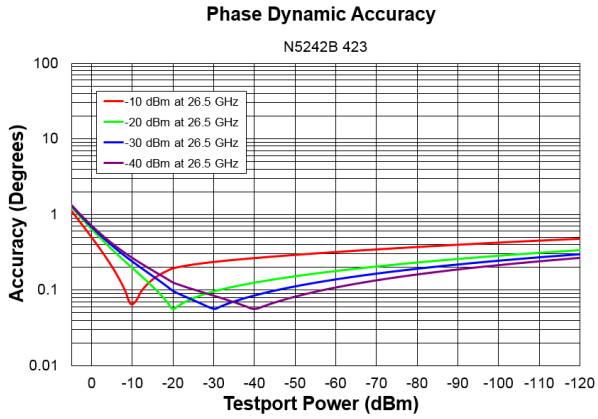

Table 101. Test Port Input (Group Delay)[1]

Description	Typical Performance
Aperture (selectable)	(frequency span)/(number of points -1)
Maximum Aperture	20% of frequency span
Range	0.5 x (1/minimum aperture)
Maximum Delay	Limited to measuring no more than 180° of phase change within the minimum aperture.)
Accuracy	See graph below. Char.

The following graph shows characteristic group delay accuracy with full 2-port calibration and a 10 Hz IF bandwidth. Insertion loss is assumed to be < 2 dB and electrical length to be ten meters.
For any S_{ij} Group Delay measurement, $S_{ii} = 0$, $S_{ij} = 1$, $S_{ji} = 0$, $S_{kl} = 0$ for all $kl \neq ij$

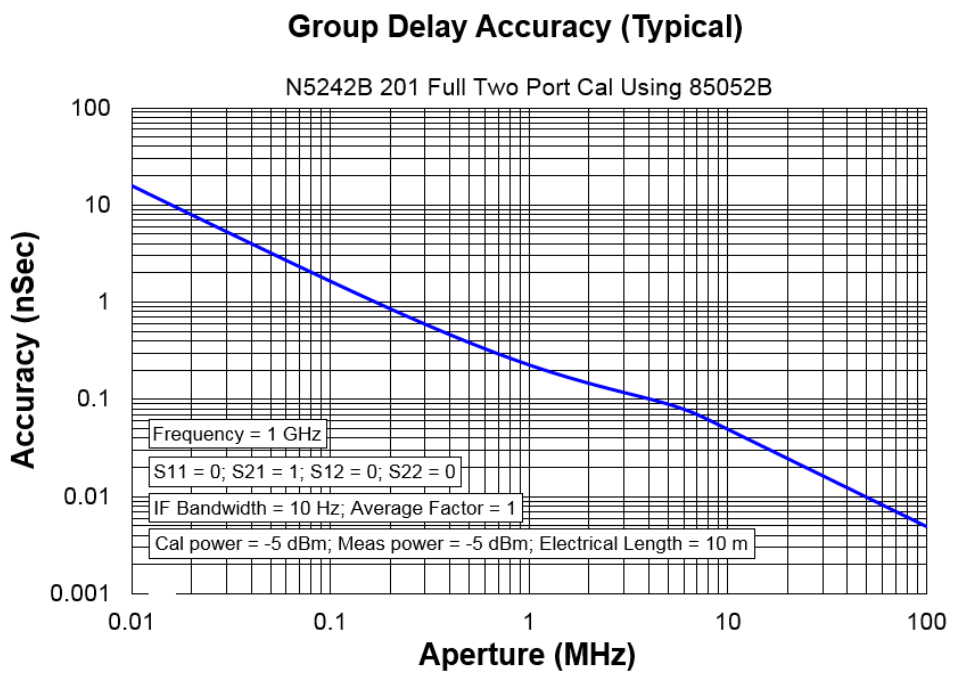

In general, the following formula can be used to determine the accuracy, in seconds, of specific group delay measurement:
±Phase Accuracy (deg)/[360 × Aperture (Hz)]
Depending on the aperture and device length, the phase accuracy used is either incremental phase accuracy or worst-case phase accuracy.

[1] Group delay is computed by measuring the phase change within a specified frequency step (determined by the frequency span and the number of points per sweep).

General Information

Table 102. Miscellaneous Information

Description	Supplemental Information	
System IF Bandwidth Range	1 Hz to 15 MHz, nominal (7 MHz, 10 MHz, and 15 MHz IFBWs are available ONLY with FW A.09.42 and later, and with DSP version 5)	
CPU	For the latest information on CPUs and associated hard drives, visit: PNA Hard Drives and CPUs (keysight.com)	
LXI	CPU version 7.0, 8.0	CPU version 9.0
	Class C	LXI 1.5 Extended Functions: HiSLIP; VSI-11 Discovery and Identification
Maximum Number of Points	100003	

Table 103. Front Panel Information, All Options

Description	Typical Performance
RF Connectors	
Test Ports	3.5 mm (male), 50 ohm (nominal), 0.002 in. Center Pin Recession (characteristic)
Jumpers	3.5 mm (female) connectors with SMA (male) jumper cables
USB 2.0 Ports - Primary (4 ports)	
Standard	Compatible with USB 2.0
Connector	USB Type-A female
Display	
Size	31 cm (12.1 in) diagonal color active matrix LCD; 1280 (horizontal) X 800 (vertical) resolution
Refresh Rate	Vertical 60 Hz; Horizontal 49.31 kHz
Pixels	Any of the following would cause a display to be considered faulty: • A complete row or column consists of “stuck” or “dark” pixels. • More than six “stuck on” pixels (but not more than three green) or more than 0.002% of the total pixels are within the LCD specifications. • More than twelve “dark” pixels (but no more than seven of the same color) or more than 0.004% of the total pixels are within the LCD specifications. • Two or more consecutive "stuck on" pixels or three or more consecutive "dark" pixel (but no more than one set of two consecutive dark pixels). • “Stuck on” pixels or more than two “dark” pixels less than 6.5 mm apart (excluding consecutive pixels).

Description	Typical Performance
Display Range	
Magnitude	±2500 dB (at 500 dB/div), max
Phase	±2500° (at 500 degrees/div), max
Polar	10 pUnits, min 10,000 Units, max
Display Resolution	
Magnitude	0.001 dB/div, min
Phase	0.01°/div, min
Marker Resolution	
Magnitude	0.001 dB, min
Phase	0.01°, min
Polar	10 pUnit, min

Table 104. Rear Panel Information, All Options

Description	Typical Performance
10 MHz Reference In	
Connector	BNC, female
Input Frequency	10 MHz ±1 ppm, 100 MHz ±1 ppm 20 MHz ±1 ppm, 80 MHz ±1 ppm
Input Level	10 MHz: -15 dBm to +20 dBm 100 MHz: -10 dBm to +20 dBm
Input Impedance	50 Ω, nom.
10 MHz Reference Out	
Connector	BNC, female
Output Frequency	10 MHz ±0.7 ppm, 100 MHz ±0.7 ppm
Signal Type	Sine Wave
Output Level	+10 dBm ±4 dB into 50 Ω
Output Impedance	50 Ω, nominal
Harmonics	<-40 dBc, typical
SRC3 (Option XSB)	
Connector	SMA, female
Output Frequency	10 MHz to 13.5 GHz
Typical Output Power Range	See Table 46
External IF Inputs	
Function	Allows use of external IF signals from remote mixers, bypassing the PNA's first converters
Connectors	SMA (female); A, B, C, D, R (4-port); A, B, R1, R2 (2-port)

Description	Typical Performance			
Frequency				
Path	DSP Version	IF Bandwidth	RF Frequency	IF Frequency
Normal IF path:	4	All	< 53 MHz	2.535211 MHz
		All	>= 53 MHz	7.605634 MHz
	5	≤ 600 kHz	< 53 MHz	2.479339 MHz
			>= 53 MHz	7.438017 MHz
		1 MHz	All	7.692 MHz
		1.5 MHz	All	7.368 MHz
		2 MHz	All	8.450 MHz
		3 MHz	All	8.163 MHz
		5 MHz	All	6.897 MHz
		7 MHz	All	10.53 MHz
		10 MHz	All	15.38 MHz
`		15 MHz	All	22.22 MHz
Narrowband IF path:	4 or 5	All	All	10.70 MHz
Input Impedance	50 Ω			
RF Damage Level	+23 dBm			
DC Damage Level	5.5 VDC			
0.1 dB Compression Point				
Normal IF path	-9.0 dBm at 7.438 MHz			
Narrowband IF path	-17 dBm at 10.70 MHz			
Pulse I/O Connector	15-pin mini D-sub (for pin assignment information, refer to the PNA online help)			
Pulse Inputs (IF Gates)				
Function	Internal receiver gates used for point-in-pulse and pulse-profile measurements			
Input Impedance	1 K Ohm			
Source Modulators	20 ns minimum pulse width			
Receiver Gates	20 ns minimum pulse width			
DC Damage Level	5.5 VDC			
Drive Voltage	0 V (off), +3.3 V (on), nominal			
RF Pulse Modulator Input (Source Modulator)				
On/Off Ratio				
10 MHz to 3.2 GHz	-64 dB			
3.2 GHz to 8.5 GHz	-80 dB			
8.5 GHz to 13.5 GHz	-80 dB			
13.5 GHz to 26.5 GHz	-80 dB			
Pulse Period				
Minimum	20 ns			
Maximum	70 s			
Pulse Outputs				
Voltage (TTL)	High: 3.3V to 3.5V Low: <1V			
Impedance	50 Ohm			

Description	Typical Performance	
External Test Set Driver		
Function	Used for driving remote mixers	
Connections	SMA (female)	
RF, LO Output Frequency Range	0.01 to 13.5 GHz (N5241B)	
	0.01 to 26.5 GHz (N5242B)	
Rear Panel LO Power	**Upper Limit (dBm)**	**Lower Limit (dBm)**
10 MHz to 1.7 GHz	--	--
1.7 GHz to 8.5 GHz	0	-10
8.5 GHz to 13.5 GHz	0	-10
13.5 GHz to 18 GHz	0	-10
18 GHz to 22.5 GHz	2	-8
22.5 GHz to 26.5 GHz	6	-5
Rear Panel RF Power	**Upper Limit (dBm)**	**Lower Limit (dBm)**
3.2 GHz to 13.5 GHz	-3	-8
13.5 GHz to 20 GHz	-3	-8
20 GHz to 26.5 GHz	-8	-14
Bias Tee Inputs		
Connectors	BNC(f) for ports 1, 2, 3 and 4	
Fuse	500 mA, bi-pin style	
Maximum Bias Current	±200 mA with no degradation of RF specifications	
Maximum Bias Voltage	±40 VDC	
Other Rear Panel Interface		
Trigger Inputs/Outputs	BNC(f), TTL/CMOS compatible	
Test Set IO	25-pin D-Sub connector, available for external test set control	
Power IO	9-pin D-Sub, female; analog and digital IO	
Handler IO	36-pin parallel I/O port; all input/output signals are default set to negative logic; can be reset to positive logic via GPIB command	
GPIB	Two ports - dedicated controller and dedicated talker/listener. 24-pin D-sub (Type D-24), female; compatible with IEEE-488	
CPU Version	**CPU version 7.0, 8.0**	**CPU version 9.0**
PCIe	Cabled PCIe x4 connector is a 4-lane slot	N/A
USB Ports	Two SuperSpeed USB ports (900 mA each), one USB port below LAN connector, and one USB device port. There are also four USB ports (500 mA each) on the front panel. The total current limit for all rear panel USB ports is 2.3 amps. The total current limit for all front panel USB ports is 2 amps.	Four SuperSpeed USB ports (900 mA each) and one USB device port. There are also four USB ports (500 mA each) on the front panel. The total current limit for all rear panel USB ports is 3.6 amps. The total current limit for all front panel USB ports is 2 amps.

Description	Typical Performance	
USB-C (Host)	N/A	Two USB-C connectors with support for USB-3.1 (max Power Delivery of 5V@1A), Thunderbolt3 (max Power Delivery of 5V@1A)[1], and Display Port (port TB1 only)
LAN	1G port; 10/100/1000 BaseT Ethernet, 8-pin configuration; auto selects between the data rates	1G and 10G ports; 10GBASE-T, Ethernet, 8-pin configuration; auto selects between the data rates. Works with Cat6/Cat7 cable.
VGA Video Output	15-pin mini D-Sub; Drives VGA compatible monitors	N/A
Mini DisplayPort	Miniature DisplayPort connector for connection to external displays	N/A
DisplayPort	N/A	Standard DisplayPort connector for connection to external displays
Line Power		
Frequency, Voltage	50/60/400 Hz for 100-120 VAC 50/60 Hz for 220-240 VAC	
	Power supply is auto switching	
Max	575 Watts	

[1] High power devices require external power supply.

Table 105. Analyzer Dimensions and Weight

All models are shipped with bottom feet, handles, and front and rear hardware.

Cabinet Dimensions	Metric (mm)	Imperial (inches)
Height		
Without bottom feet:EIA RU[1] = 6	266.1	10.5
With bottom feet	279.1	11.0
Width		
Without handles or rack-mount flanges	425.6	16.8
With handles, without rack-mount flanges	458.7	18.1
With handles and rack-mount flanges	482.9	19.0
Depth		
Without front and rear panel hardware	533.0	21.0
With front and rear panel hardware, handles	578.0	22.7
Weight (nominal)	**Net**	**Shipping**
2-port models	27 kg (60 lb)	43 kg (95 lb)
4-port models	37 kg (82 lb)	53 kg (117 lb)

[1] Electronics Industry Association rack units. 1 RU = 1.75 in.

Regulatory and Environmental Information

For Regulatory and Environmental information, refer to the PNA Series Installation and Quick Start Guide, located online at http://literature.cdn.keysight.com/litweb/pdf/E8356-90001.pdf.

Measurement Throughput Summary

Cycle time Includes sweep time, retrace time and band-crossing time. Analyzer display turned off with DISPLAY:ENABLE OFF. Add 21 ms for display on. Data for one trace (S11) measurement. LF Auto BW off.

Table 106. Cycle Time (ms) for Measurement Completion, All Models, All Options - Typical

Sweep Range	IF Bandwidth		Number of Points			
			201	401	1601	16001
50 kHz to 100 MHz	10 kHz	Uncorrected	67.1	127.9	493	4870
		2-Port cal	133.1	255	986	9746
	1 kHz	Uncorrected	290.3	574	2283	22768
		2-Port cal	579	1149	4564	45539
	100 Hz	Uncorrected	2529	5044	20138	201134
		2-Port cal	5056	10087	40273	402298
7 GHz to 8 GHz	600 kHz	Uncorrected	4.5	4.7	8.2	53.6
		2-Port cal	9.2	9.6	16.7	108.2
	10 kHz	Uncorrected	38.6	52.8	202	2022
		2-Port cal	77.3	106	404	3978
	1 kHz	Uncorrected	208.3	421	1586	15814
		2-Port cal	403	798	3171	31624
9 GHz to 10 GHz	600 kHz	Uncorrected	4.3	4.5	8.2	54.1
		2-Port cal	8.6	9	16.6	108.3
	10 kHz	Uncorrected	35.3	52.8	202.3	1996
		2-Port cal	70.6	106.1	404	3978
	1 kHz	Uncorrected	203.3	417	1589	15813
		2-Port cal	403	798	3169	31623
10 GHz to 13.5 GHz	600 kHz	Uncorrected	7.2	7.5	9	54.8
		2-Port cal	14.7	15.1	18.5	110.6
	10 kHz	Uncorrected	41.4	79.3	202.8	1991
		2-Port cal	83.2	159	406	3980
	1 kHz	Uncorrected	202.3	400	1585	15814
		2-Port cal	404	800	3171	31626
13.5 GHz to 20 GHz	600 kHz	Uncorrected	14	14.2	14.9	58.5
		2-Port cal	27.6	27.9	29.4	117
	10 kHz	Uncorrected	43.8	81.6	214.8	1993
		2-Port cal	87.1	162.8	428	3985
	1 kHz	Uncorrected	204.8	402	1588	15817
		2-Port cal	408	804	3175	31630

Table 107. N5241B Cycle Time (ms) for Full-Span Measurement Completion - Typical

10 MHz to 13.5 GHz		Number of Points			
IF Bandwidth		201	401	1601	16001
600 kHz	Uncorrected	30	41	54.4	93.7
	2-Port cal	59.1	81.1	108	188
10 kHz	Uncorrected	56.5	100.6	359	2157
	2-Port cal	111.4	204	717	4312
1 kHz	Uncorrected	217.3	421	1638	16210
	2-Port cal	432	840	3275	32416

Table 108. N5242B Cycle Time (ms) for Full-Span Measurement Completion - Typical

10 MHz to 26.5 GHz		Number of Points			
IF Bandwidth		201	401	1601	16001
600 kHz	Uncorrected	33.2	46.1	68.6	102.7
	2-Port cal	65.1	91.1	136.4	202.5
10 kHz	Uncorrected	58.5	100.3	345	2192
	2-Port cal	115.3	198.8	688	4382
1 kHz	Uncorrected	219.5	421	1624	16029
	2-Port cal	436	839	3246	32054

Table 109. N5249B Cycle Time (ms) for Full-Span Measurement Completion - Typical

10 MHz to 8.5 GHz		Number of Points			
IF Bandwidth		201	401	1601	16001
600 kHz	Uncorrected	29.2	38.3	49.1	89.3
	2-Port cal	57.2	75.5	96.8	178
10 kHz	Uncorrected	58.4	105.6	370	2152
	2-Port cal	115.3	209.3	737	4301
1 kHz	Uncorrected	219.3	426	1659	16432
	2-Port cal	436	850	3316	32860

Table 110. Cycle Time vs. IF Bandwidth - Typical

Applies to the Preset condition (201 points, correction off) except for the following changes:

- CF = 10 GHz
- Span = 100 MHz
- Display off (add 21 ms for display on)

Cycle time includes sweep and retrace time.

Description	Typical Performance	
IF Bandwidth (Hz)	Cycle Time (ms)	Trace Noise Magnitude (dB rms)
600,000	2.4	0.009
100,000	3.5	0.003
30,000	7	0.002
10,000	26.9	0.001
3,000	69.3	0.0007
1,000	200.8	0.0004
300	616	0.0003
100	1798	0.0002
30	5955	<0.0002
10	17803	<0.0002
3	59246	<0.0002

Table 111. Cycle Time (ms) vs. Number of Points - Typical

Applies to the Preset condition (correction off) except for the following changes:

- CF = 10 GHz
- Span = 100 MHz
- Display off (add 21 ms for display on)

Cycle time includes sweep and retrace time.

Description	IF Bandwidth (Hz)			
Number of Points	**1,000**	**10,000**	**30,000**	**600,000**
3	4.8	2.2	1.9	1.8
11	12.8	3.8	2.7	1.8
51	52.4	8.2	3.1	2.1
101	101.8	14.4	4.4	2
201	201	26.9	7	2.4
401	398	51.8	12.1	3.1
801	793	101.6	22.2	4.5
1,601	1584	200.8	42	6.9
6,401	6326	797	161.7	22.1
16,001	15812	1989	401	52.4

Table 112. Data Transfer Time[1] (ms) - Typical

NOTE The following was measured on a unit with Synthesizer 6.

Description	Number of Points			
	201	401	1601	16,001
SCPI over GPIB (Program executed on external PC[2])				
32-bit floating point	5.6	10.5	39.9	400
64-bit floating point	10.5	20.3	79.2	788
ASCII	46	92.5	370	3702
SCPI over SICL/LAN or TCP/IP Socket (Program executed in the analyzer)				
32-bit floating point	0.18	0.21	0.5	3.6
64-bit floating point	0.22	0.28	0.62	5.3
ASCII	6.3	12.3	47.3	470
COM[3] (Program executed in the analyzer)				
32-bit floating point	<0.15	0.15	0.2	0.7
Variant type	0.75	1.2	4.5	50
DCOM over LAN[3] (Program executed on external PC)				
32-bit floating point	<1.0	1.2	2.1	13
Variant type	2.7	4.5	15	150

[1] Measured with the analyzer display off. Values will increase slightly if the analyzer display is on.
[2] Measured when using the SCPI command DISPlay: VISible OFF.
[3] Values are for real and imaginary pairs, with the analyzer display off.

NOTE Specifications for Recall & Sweep Speed are not provided for the N524xB analyzers.

Table 113. Typical Cycle Time for Amplifier Noise Figure Measurement (Option 029 and S93029B)

NOTE The following was measured on a unit with Synthesizer 6.

Conditions:

- Frequency range: 4 – 6 GHz
- IF bandwidth: 1 kHz
- Noise settings: 4 MHz noise bandwidth, 10 averages, low-noise receiver
- Impedance states for vector noise cal: 5
- Other: NA application display on; correction on

Description	Number of Points			
	51	101	201	401
Scalar noise cal cycle time (ms, typical)	1154	2276	4512	8980
Vector noise cal cycle time (ms, typical)	5280	10,432	20,744	41,356

Table 114. Typical Cycle Time for Amplifier Gain Compression Measurement (Option S93086B)

NOTE The following was measured on a unit with Synthesizer 6.

Conditions:

- Frequency range: 4 – 6 GHz
- IF bandwidth: 1 kHz
- Sweep type: Smart
- Compression type: 1 dB compression from linear gain (0.05 dB tolerance)
- Other: NA application display on; correction on

Description	Number of Points			
	51	101	201	401
Cycle time (ms, typical)	175	267	430	756

Table 115. Typical Cycle Time for Amplifier Swept Intermodulation Distortion Measurement (Option S93087B)

NOTE The following was measured on a unit with Synthesizer 6.

Conditions:

- Frequency range: 4 – 6 GHz
- Main tone IF bandwidth: 10 kHz
- IM tone IF bandwidth: 1 kHz
- Measurement parameters: PwrMain (avg), IM3 (dB relative to carrier)
- Other: NA application display on; correction on

Description	Number of Points			
	51	101	201	401
Cycle time (ms, typical)	248	463	891	1752

Table 116. Typical Cycle Time for Converter Noise Figure Measurement (Option 029 and S93029B)

NOTE The following was measured on a unit with Synthesizer 6.

Conditions:

- Input frequency: 3 GHz CF, 75 MHz span
- LO frequency: 2.12 GHz fixed
- Output frequency: 880 MHz CF, 75 MHz span
- IF bandwidth: 1 kHz
- Noise settings: 4 MHz noise bandwidth, 10 averages, low-noise receiver
- Impedance states for vector noise cal: 5
- Other: NA application display on; correction on

Description	Number of Points			
	51	101	201	401
Scalar noise cal cycle time (ms, typical)	1330	2617	5181	10,230
Vector noise cal cycle time (ms, typical)	5540	10,958	21,626	42,977

Table 117. Typical Cycle Time for Converter Measurement with SMC + Phase (Option S93083B)

NOTE The following was measured on a unit with Synthesizer 6.

Conditions:

- Input frequency: 3 GHz CF, 75 MHz span
- LO frequency: 2.12 GHz fixed
- Output frequency: 880 MHz CF, 75 MHz span
- Other: NA application display on; correction on (includes match correction but not SC12 sweep)

Description	Number of Points			
	51	101	201	401
Cycle time, 10 kHz IF bandwidth (ms, typical)	87	123	193	330
Cycle time, 1 kHz IF bandwidth (ms, typical)	215	375	690	1320

Table 118. Typical Cycle Time for Converter Gain Compression Measurement (Option S93086B)

NOTE The following was measured on a unit with Synthesizer 6.

Conditions:

- Input frequency: 3 GHz CF, 75 MHz span
- LO frequency: 2.12 GHz fixed
- Output frequency: 880 MHz CF, 75 MHz span
- IF bandwidth: 1 kHz
- Sweep type: Smart
- Compression type: 1 dB compression from linear gain (0.05 dB tolerance)
- Other: NA application display on; correction on

Description	Number of Points			
	51	101	201	401
Cycle time (ms, typical)	235	342	554	980

Table 119. Typical Cycle Time for Converter Swept Intermodulation Distortion Measurement (Option S93087B)

NOTE The following was measured on a unit with Synthesizer 6.

Conditions:

- Input frequency: 3 GHz CF, 75 MHz span
- LO frequency: 2.12 GHz fixed
- Output frequency: 880 MHz CF, 75 MHz span
- Main tone IF bandwidth: 10 kHz
- IM tone IF bandwidth: 1 kHz
- Measurement parameters: PwrMain (avg), IM3 (dB relative to carrier)
- Other: NA application display on; correction on

Description	Number of Points			
	51	101	201	401
Cycle time (ms, typical)	474	905	1767	3517

Front-Panel Jumpers

NOTE All PNA-X options have the following front-panel jumpers for each port.

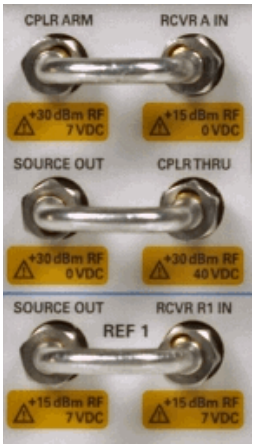

Table 120. Measurement Receiver Inputs (dBm) - Typical

(RCVR A, B, C, D IN) @ 0.1dB Typical Compression

Description	All Options
10 MHz to 50 MHz	-4
50 MHz to 500 MHz	-3
500 MHz to 8.5 GHz	-2
8.5 GHz to 13.5 GHz	-2
13.5 GHz to 16 GHz	-2
16 GHZ to 20 GHz	-2.5
20 GHZ to 26.5 GHz	-4

Table 121. Reference Receiver Inputs and Reference Source Outputs (dBm) - Typical

(RCVR R1 IN, REF 1 SOURCE OUT) @ Max Specified Output Power

Description	Option 201, 401		Option 21x, 41x		Option 22x, 42x	
	Filtered Mode[1]	Hi Power Mode[1]	Filtered Mode[1]	Hi Power Mode[1]	Filtered Mode[1]	Hi Power Mode[1]
10 MHz to 50 MHz	-8	-3	-8	-3	-9	-6
50 MHz to 500 MHz	-6	-3	-6	-3	-7	-5
500 MHz to 3.2 GHz	-6	-6	-5	-5	-7	-5
3.2 GHz to 8.5 GHz	-3	-3	-2	-2	-2	-2
8.5 GHz to 10 GHz	-3	-3	-2	-2	-2	-2
10 GHz to 13.5 GHz	-4	-4	-3	-3	-3	-3
13.5 GHZ to 16 GHz	-4	-4	-3	-3	-3	-3
16 GHZ to 20 GHz	-5	-5	-6	-6	-6	-6
20 GHZ to 24 GHz	-7	-7	-8	-8	-9	-9
24 GHZ to 26.5 GHz	-16	-16	-15	-15	-18	-18

[1] In Filtered Mode, the signal path goes through filters to minimize harmonics below 3.2 GHz. In Hi Power Mode, the signal bypasses the filters to maximize output power.

Table 122. Reference Receiver Inputs and Reference Source Outputs (dBm) - Typical

(RCVR R2, R3, R4 IN, REF 2, 3, 4 SOURCE OUT) @ Max Specified Output Power

Description	Option 401		Options 201, 401	Option 41x		Options 21x, 41x
	RCVR R3 IN, REF 3 SOURCE OUT	RCVR R3 IN, REF 3 SOURCE OUT	RCVR R2, R4 IN, REF 2, 4 SOURCE OUT	RCVR R3 IN, REF 3 SOURCE OUT	RCVR R3 IN, REF 3 SOURCE OUT	RCVR R2, R4 IN, REF 2, 4 SOURCE OUT
	Filtered Mode[1]	Hi Power Mode[1]		Filtered Mode[1]	Hi Power Mode[1]	
10 MHz to 50 MHz	-6	-1	-1	-6	-1	-1
50 MHz to 500 MHz	-4	-1	-1	-4	-1	-1
500 MHz to 3.2 GHz	-4	-4	0	-3	-3	-1
3.2 GHz to 8.5 GHz	0	0	0	1	1	0
8.5 GHz to 10 GHz	0	0	0	1	1	0
10 GHz to 13.5 GHz	1	1	0	1	1	1
13.5 GHZ to 16 GHz	1	1	0	1	1	1
16 GHZ to 20 GHz	1	1	-3	0	0	-3
20 GHZ to 24 GHz	0	0	-6	-1	-1	-4
24 GHZ to 26.5 GHz	-8	-8	-12	-7	-7	-13

[1] In Filtered Mode, the signal path goes through filters to minimize harmonics below 3.2 GHz. In Hi Power Mode, the signal bypasses the filters to maximize output power.

Table 123. Reference Receiver Inputs and Reference Source Outputs (dBm) - Typical

(RCVR R2, R3, R4 IN, REF 2, 3, 4 SOURCE OUT) @ Max Specified Output Power

Description	Option 42x		Options 22x, 42x
	RCVR R3 IN, REF 3 SOURCE OUT	RCVR R3 IN, REF 3 SOURCE OUT	RCVR R2, R4 IN, REF 2, 4 SOURCE OUT
	Filtered Mode[1]	Hi Power Mode[1]	
10 MHz to 50 MHz	-7	-4	-1
50 MHz to 500 MHz	-6	-4	-1
500 MHz to 3.2 GHz	-5	-3	-1
3.2 GHz to 8.5 GHz	1	1	0
8.5 GHz to 10 GHz	1	1	0
10 GHz to 13.5 GHz	1	1	-2
13.5 GHZ to 16 GHz	1	1	-2
16 GHZ to 20 GHz	0	0	-4
20 GHZ to 24 GHz	-2	-2	-6
24 GHZ to 26.5 GHz	-10	-10	-10

[1] In Filtered Mode, the signal path goes through filters to minimize harmonics below 3.2 GHz. In Hi Power Mode, the signal bypasses the filters to maximize output power.

Table 124. Source Outputs (dBm) - Typical

(PORT 1, 2, 3, 4 SOURCE OUT) @ Max Specified Output Power

Description	Options 201, 401			Options 21x, 41x		
	PORT 1, 3 SOURCE OUT		PORT 2, 4 SOURCE OUT	PORT 1, 3 SOURCE OUT		PORT 2, 4 SOURCE OUT
	Filtered Mode[1]	Hi Power Mode[1]		Filtered Mode[1]	Hi Power Mode[1]	
10 MHz to 50 MHz	8	13	13	8	13	13
50 MHz to 500 MHz	10	13	13	10	13	13
500 MHz to 3.2 GHz	11	11	13	11	11	14
3.2 GHz to 8.5 GHz	14	14	14	14	14	14
8.5 GHz to 10 GHz	14	14	14	14	14	14
10 GHz to 13.5 GHz	14	14	14	14	14	13
13.5 GHZ to 16 GHz	14	14	14	14	14	13
16 GHZ to 20 GHz	14	14	11	12	12	10
20 GHZ to 24 GHz	13	13	9	10	10	9
24 GHZ to 26.5 GHz	7	7	4	5	5	2

[1] In Filtered Mode, the signal path goes through filters to minimize harmonics below 3.2 GHz. In Hi Power Mode, the signal bypasses the filters to maximize output power.

Table 125. Source Outputs (dBm) - Typical

(PORT 1, 2, 3, 4 SOURCE OUT) @ Max Specified Output Power

Description	Options 22x, 42x		
	PORT 1, 3 SOURCE OUT		PORT 2, 4 SOURCE OUT
	Filtered Mode[1]	Hi Power Mode[1]	
10 MHz to 50 MHz	7	10	13
50 MHz to 500 MHz	8	10	13
500 MHz to 3.2 GHz	9	11	14
3.2 GHz to 8.5 GHz	14	14	14
8.5 GHz to 10 GHz	14	14	14
10 GHz to 13.5 GHz	14	14	12
13.5 GHZ to 16 GHz	14	14	12
16 GHZ to 20 GHz	12	12	9
20 GHZ to 24 GHz	9	9	7
24 GHZ to 26.5 GHz	2	2	4

[1] In Filtered Mode, the signal path goes through filters to minimize harmonics below 3.2 GHz. In Hi Power Mode, the signal bypasses the filters to maximize output power.

Table 126. Coupler Inputs (dB) - Typical

(PORT 1, 2, 3, 4 CPLR THRU) Insertion Loss of Coupler Thru

Description	Options 201, 401	Options 21x, 41x, 22x, 42x
10 MHz to 50 MHz	0	-0.5
50 MHz to 500 MHz	-0.25	-0.75
500 MHz to 3.2 GHz	-0.5	-1.0
3.2 GHz to 8.5 GHz	-0.75	-1.25
8.5 GHz to 10 GHz	-0.75	-1.25
10 GHz to 13.5 GHz	-1.0	-1.75
13.5 GHZ to 16 GHz	-1.0	-1.75
16 GHZ to 20 GHz	-1.5	-2.25
20 GHZ to 24 GHz	-1.5	-2.5
24 GHZ to 26.5 GHz	-1.75	-2.5

Table 127. Damage Level - Typical

Description	RF (dBm)	DC (v)
RCVR A, B, C, D IN	+15	+7 (0[1])
RCVR R1 IN	+15	+7
RCVR R2, R3, R4 IN	+15	+7 (+15[1])
REF 1 SOURCE OUT	+15	+7
REF 2, 3, 4 SOURCE OUT	+30 (+15[1])	+7 (0[1])
PORT 1, 2, 3, 4 SOURCE OUT	+30	+7 (0[1])
PORT 1, 2, 3, 4 CPLR THRU	+30 (+20[2]) (+43[3])	+40 (+50[2])
PORT 1, 2, 3, 4 CPLR ARM	+30	+7

[1] Specification for options 217, 222, 417, and 422.
[2] Specification for options 205 and 425.
[3] +43 dBm is the damage level of the coupler with no thru connection.

Test Set Block Diagrams

NOTE For best readability, use a color printer for printing the following graphics.

Legend

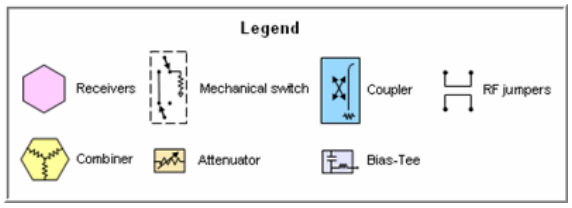

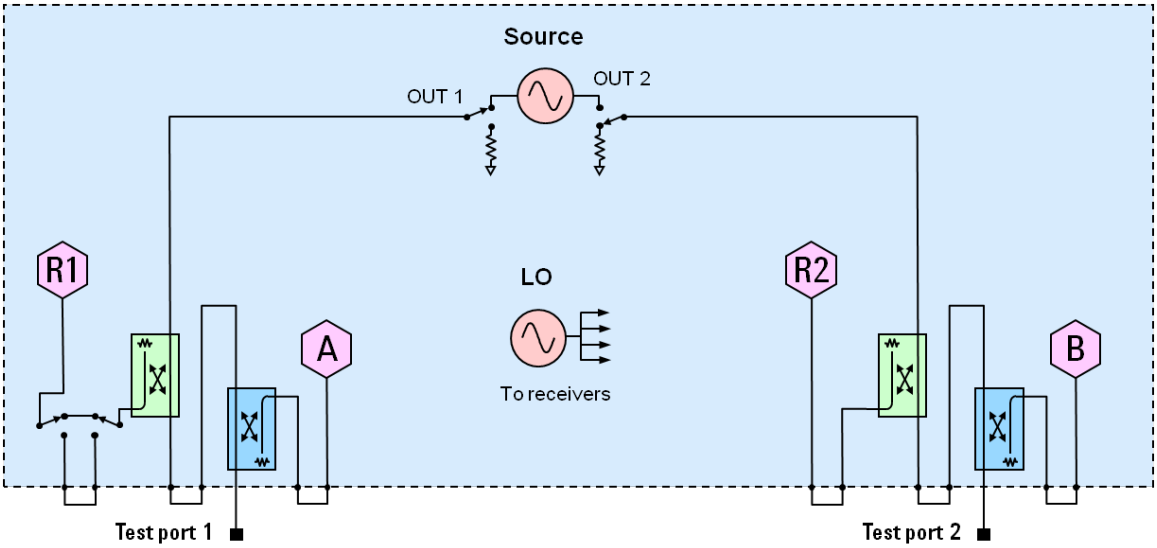

Figure 1. 2-Port N5241B, N5242B, and N5249B Base Unit Option 201

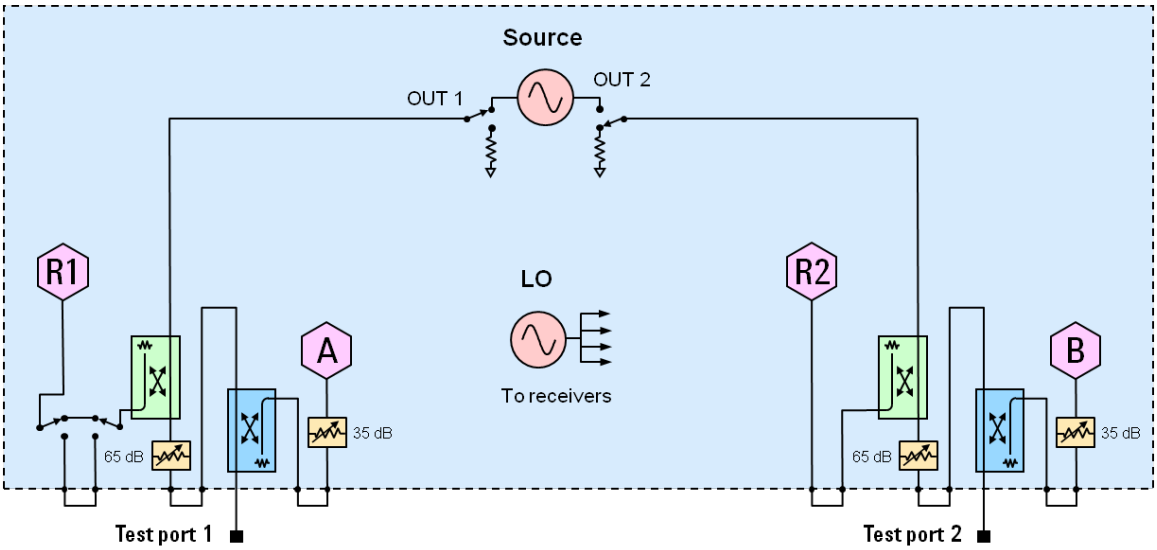

Figure 2. 2-Port N5241B, N5242B, and N5249B Option 217

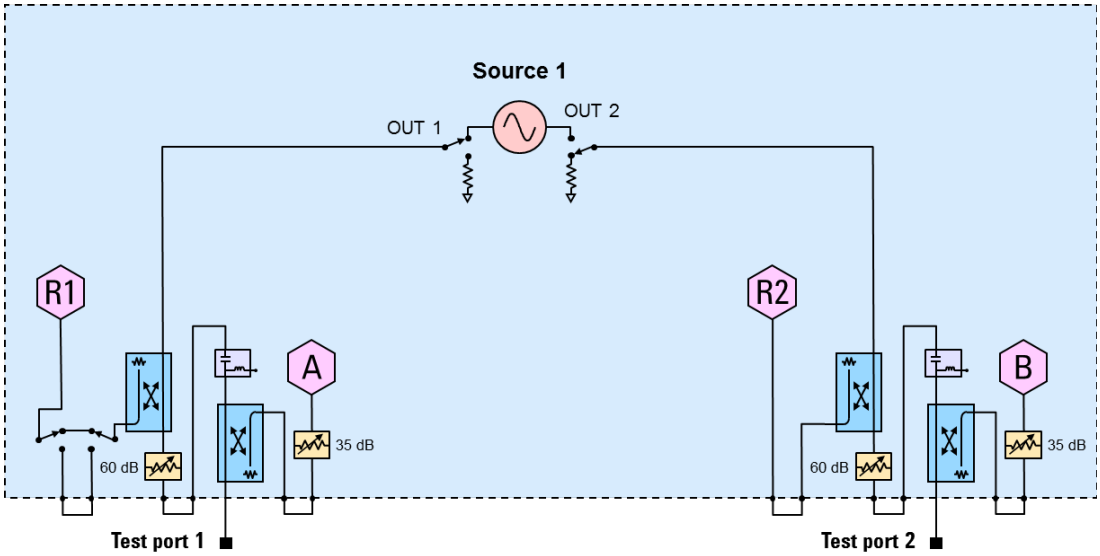

Figure 3. 2-Port N5241B, N5242B, and N5249B Option 219

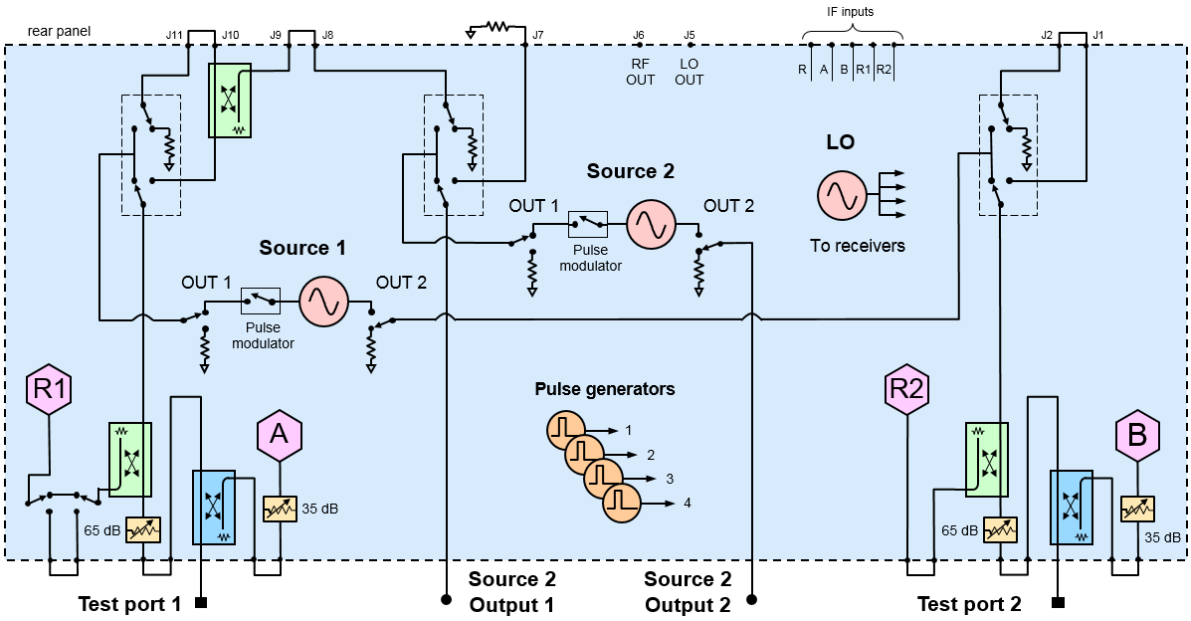

Figure 4. 2-Port N5241B, N5242B, and N5249B Option 222

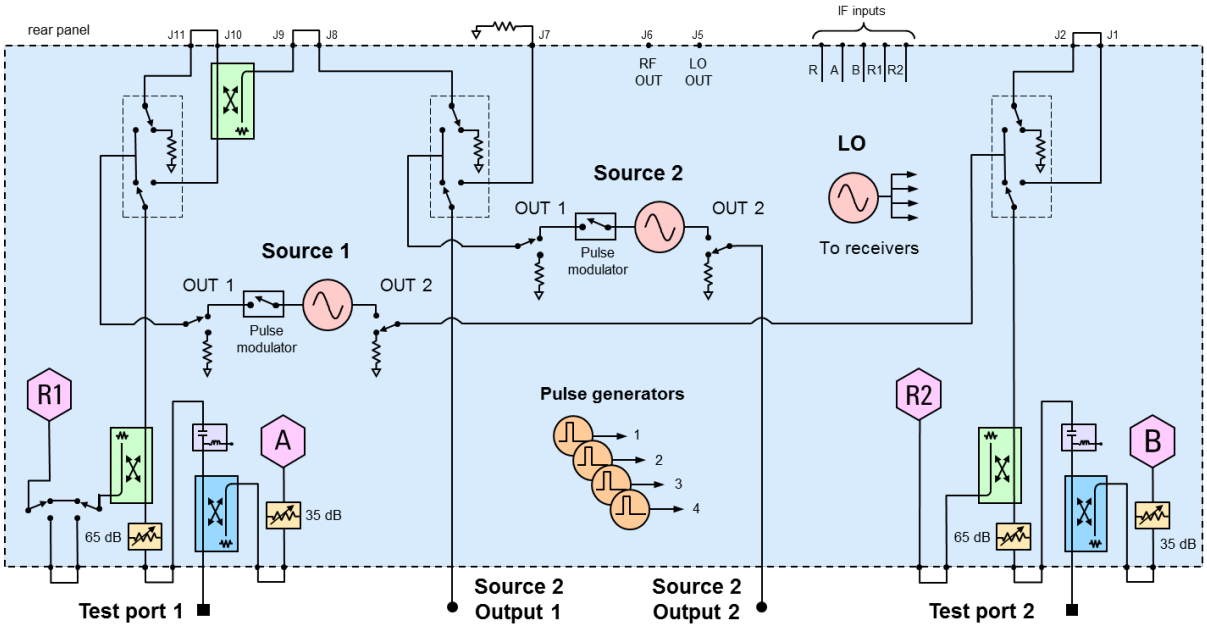

Figure 5. 2-Port N5241B, N5242B, and N5249B Option 224

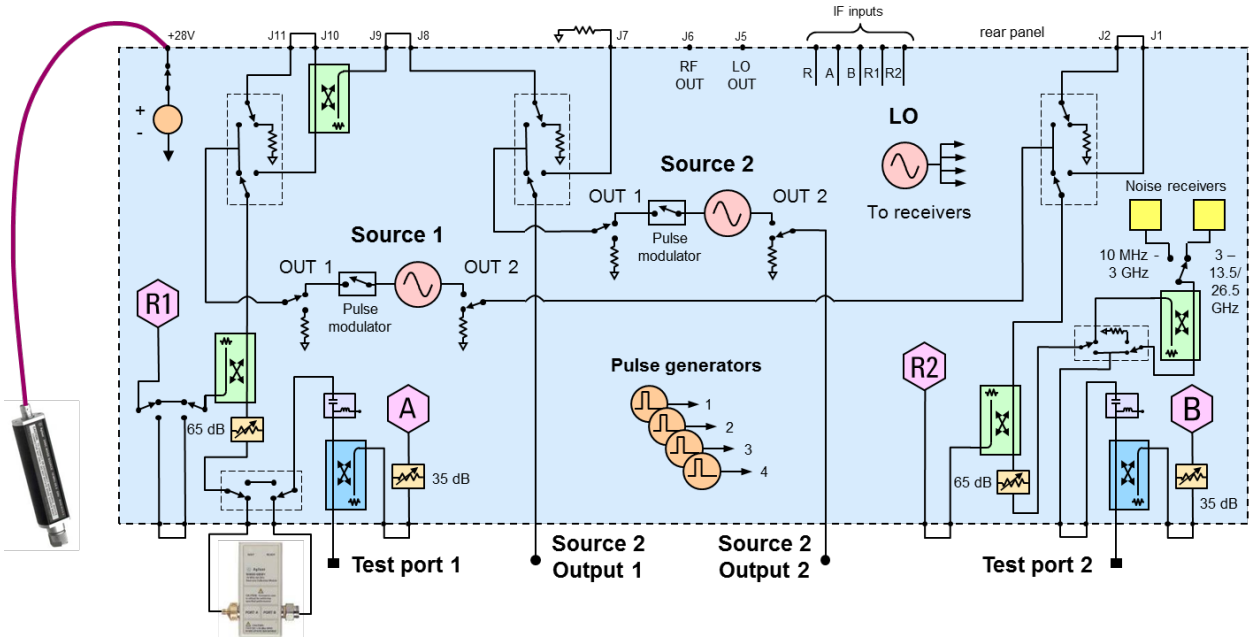

Figure 6. 2-Port N5241B, N5242B, and N5249B Option 224 with 029

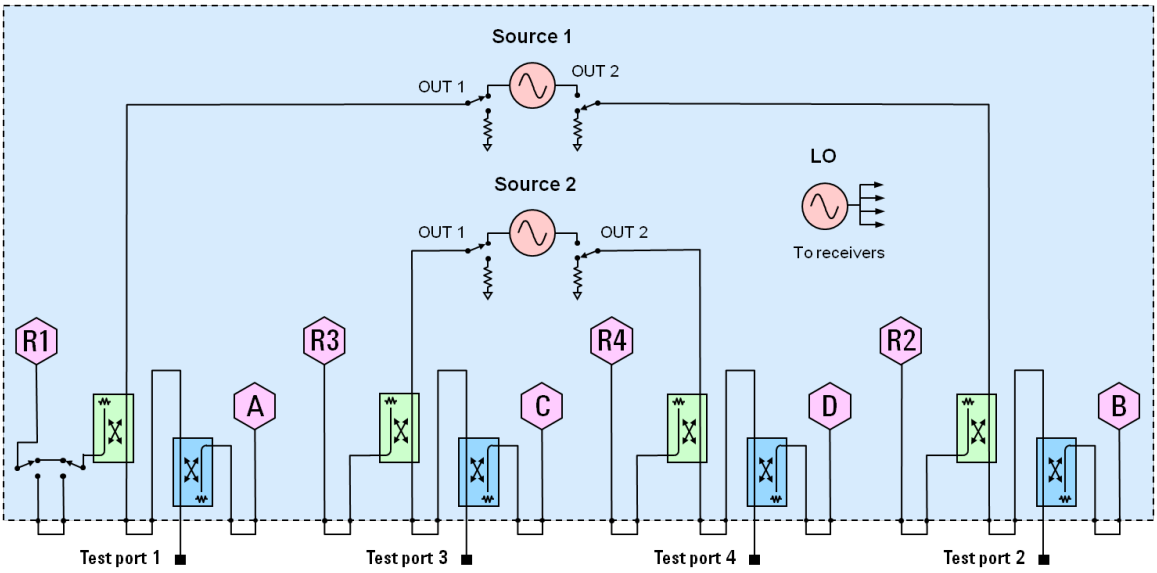

Figure 7. 4-Port N5241B, N5242B, and N5249B Base Unit Option 401

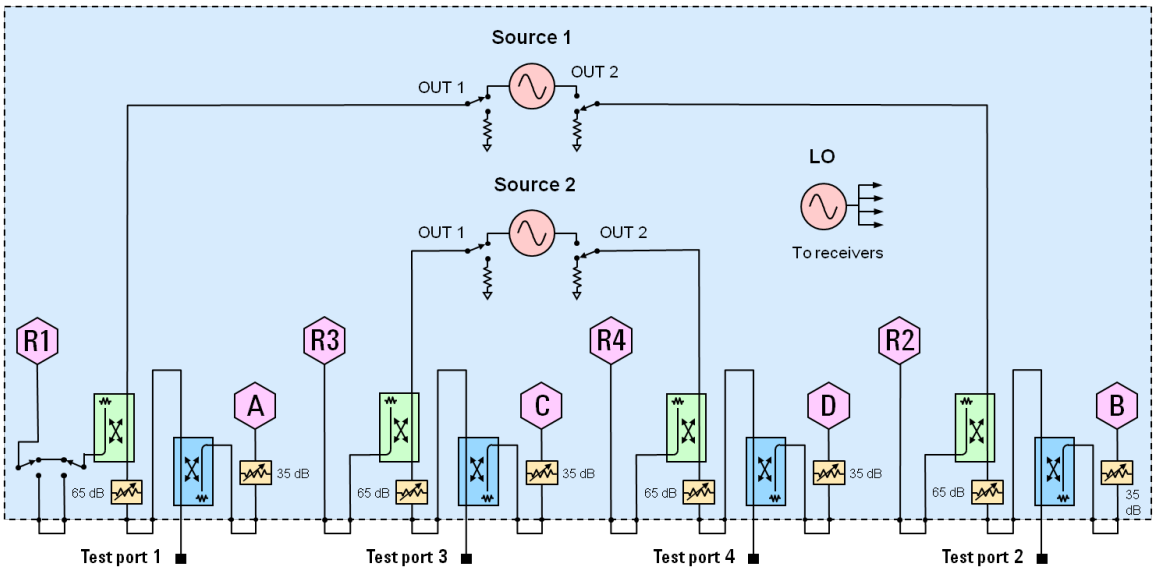

Figure 8. 4-Port N5241B, N5242B, and N5249B Option 417

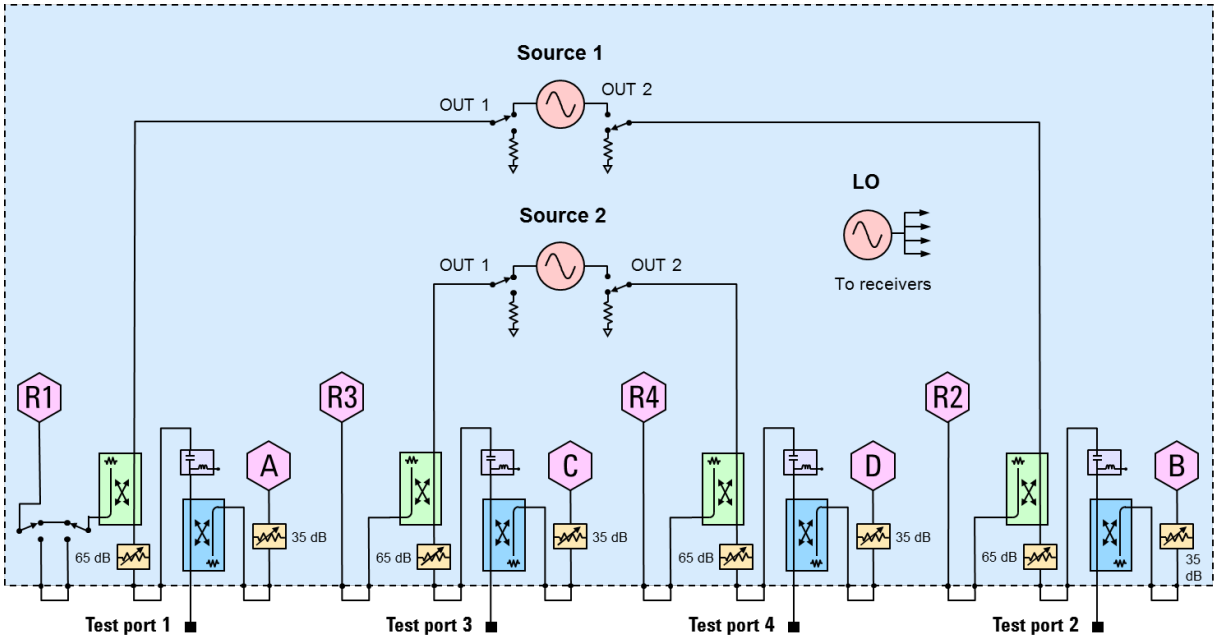

Figure 9. 4-Port N5241B, N5242B, and N5249B Option 419

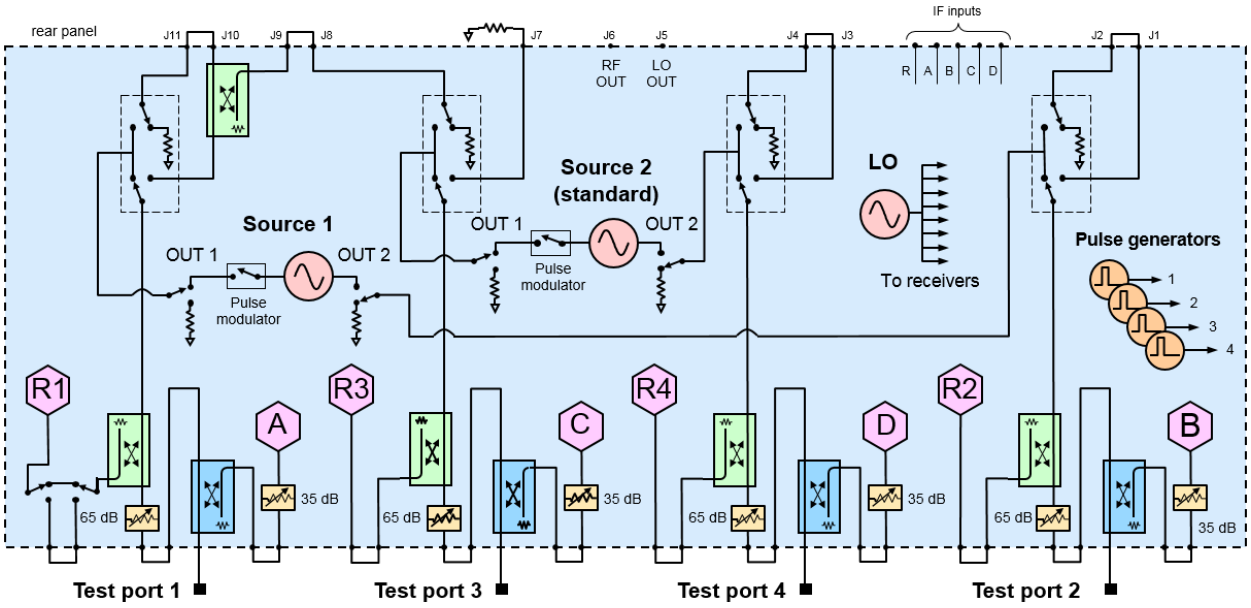

Figure 10. 4-Port N5241B, N5242B, and N5249B Option 422

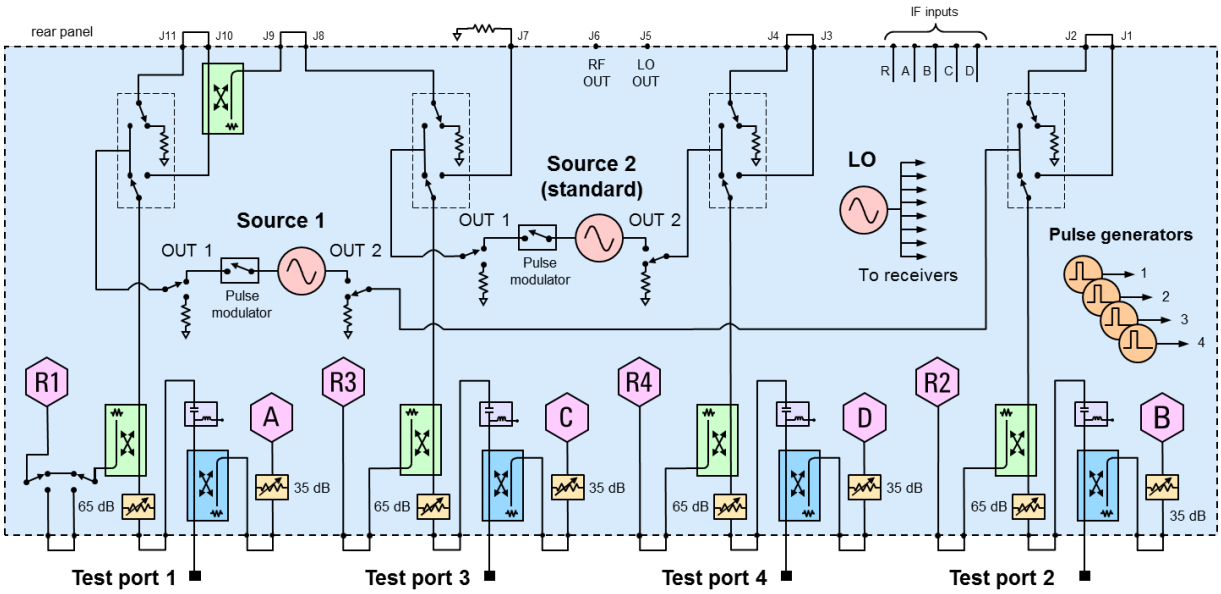

Figure 11. 4-Port N5241B, N5242B, and N5249B Option 423

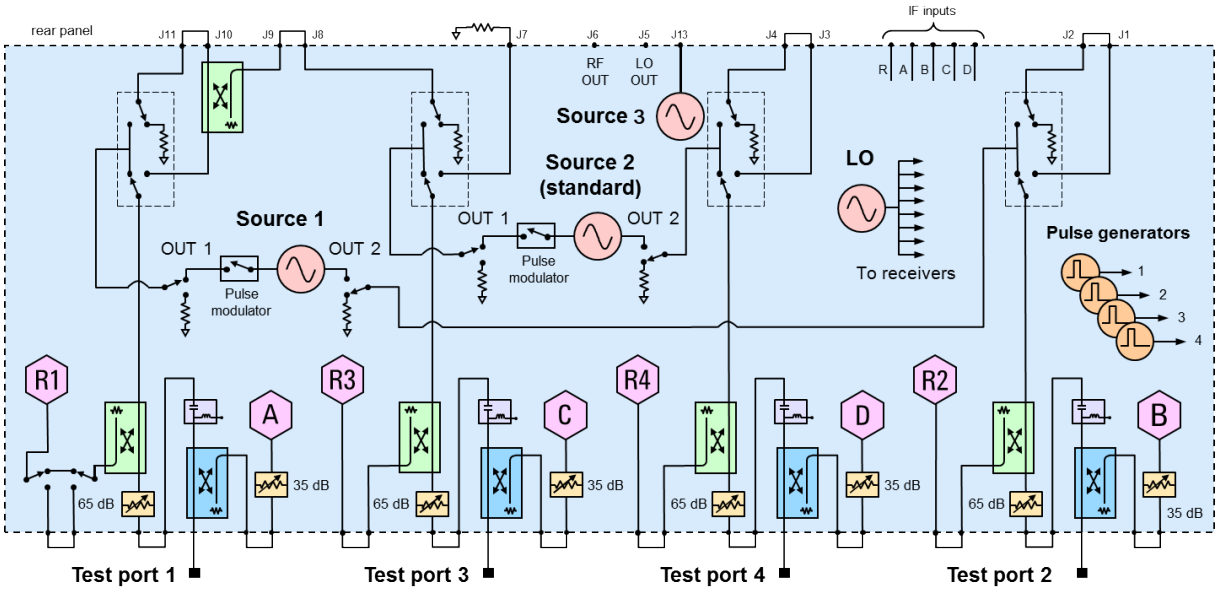

Figure 12. 4-Port N5241B, N5242B, and N5249B Option 423 with XSB

NOTE Option XSB is available with Option 422 also. Option 422 does not have the bias tees.

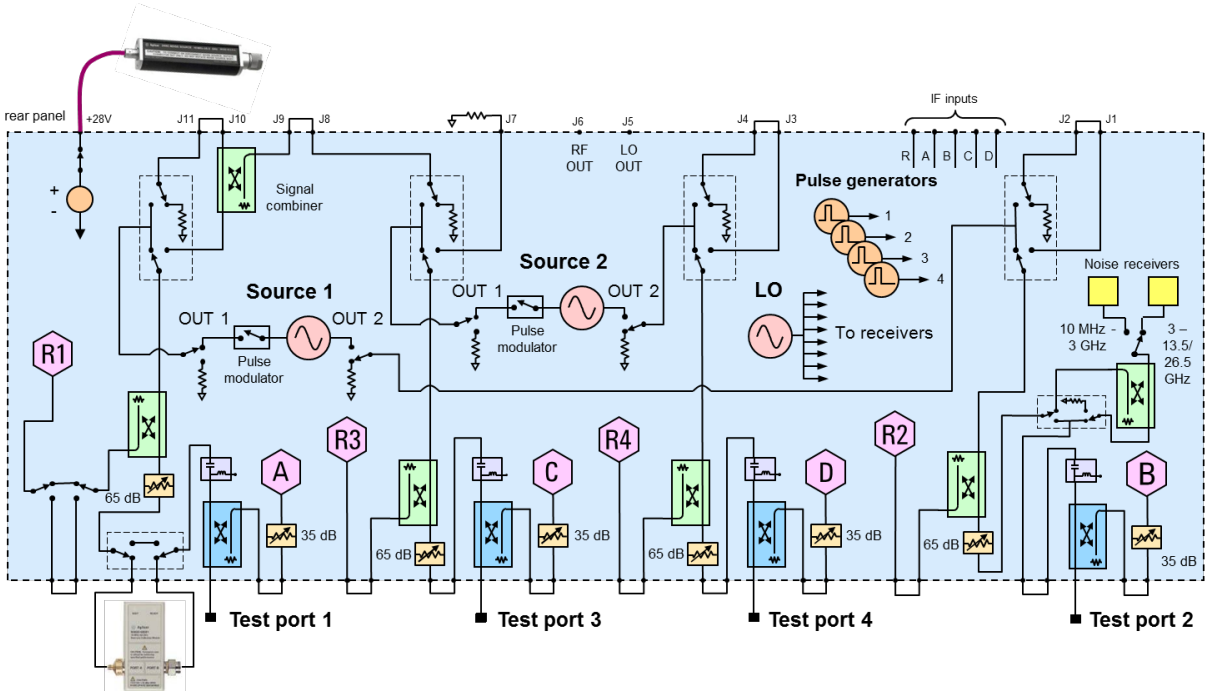

Figure 13. 4-Port N5241B, N5242B, and N5249B Option 423 with 029

The following LFE block diagram shows how the low-frequency hardware is configured for a single test port. The other ports are configured similarly.

NOTE The attenuators do not apply to Option 205.

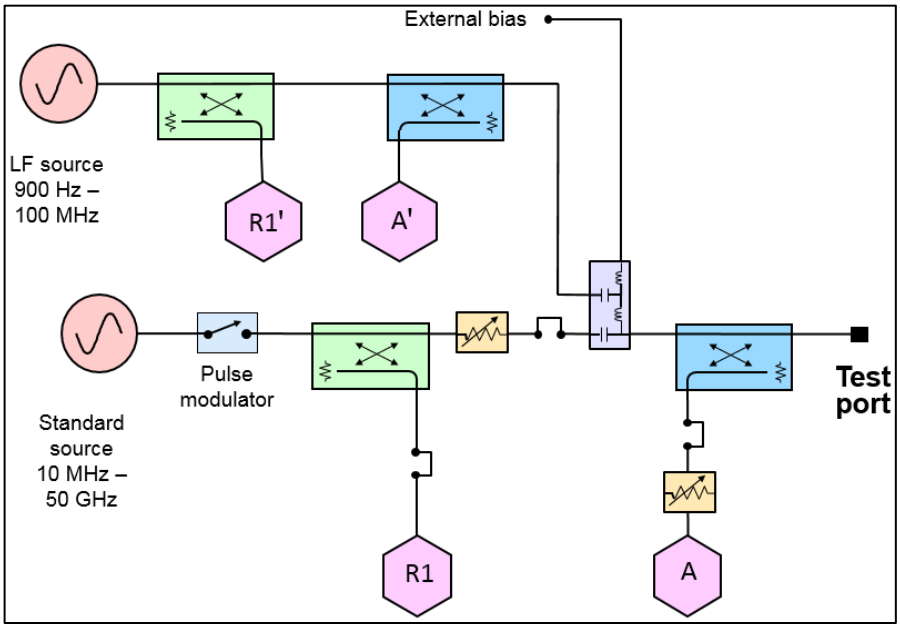

Figure 14. N5241B, N5242B, and N5249B LFE Options

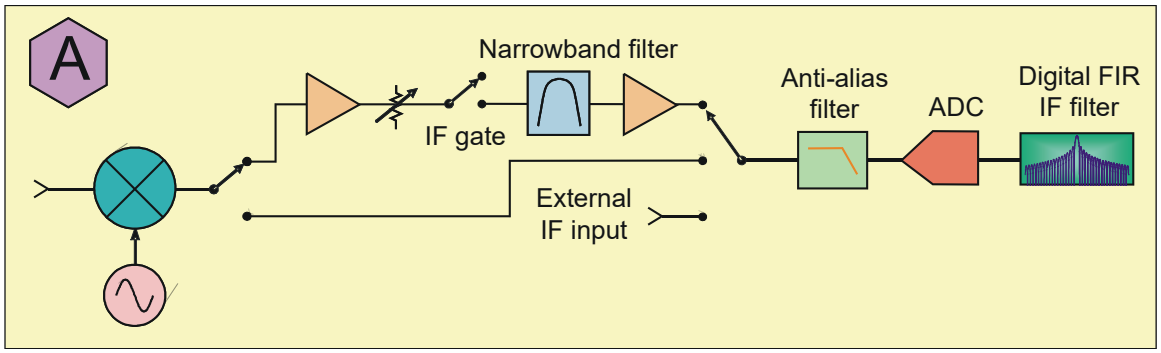

Figure 15. Receiver Block Diagram

This information is subject to change without notice.
© Keysight Technologies 2017-2026
Print Date: August 2026
N5242-90027