Installation and Quick Start Guide

Agilent Technologies
8719ET/ES
8720ET/ES
8722ET/ES
Network Analyzers



Part Number: 08720-90391

Printed in USA

Print Date: February 2001

Supersedes: May 2000

Notice

The information contained in this document is subject to change without notice.

Agilent Technologies makes no warranty of any kind with regard to this material, including but not limited to, the implied warranties of merchantability and fitness for a particular purpose. Agilent Technologies shall not be liable for errors contained herein or for incidental or consequential damages in connection with the furnishing, performance, or use of this material.

© Copyright 1999-2001 Agilent Technologies, Inc

Certification

Agilent Technologies Company certifies that this product met its published specifications at the time of shipment from the factory. Agilent Technologies further certifies that its calibration measurements are traceable to the United States National Institute of Standards and Technology, to the extent allowed by the Institute's calibration facility, and to the calibration facilities of other International Standards Organization members.

Regulatory and Warranty Information

The regulatory and warranty information is in the *User's Guide*.

Assistance

Product maintenance agreements and other customer assistance agreements are available for Agilent Technologies products. For any assistance, contact your nearest Agilent Technologies sales or service office. See Table 2-1 on page 2-26 for the nearest office.

Safety Notes

The following safety notes are used throughout this manual. Familiarize yourself with each of the notes and its meaning before operating this instrument.

WARNING	**Warning denotes a hazard. It calls attention to a procedure which, if not correctly performed or adhered to, could result in injury or loss of life. Do not proceed beyond a warning note until the indicated conditions are fully understood and met.**

CAUTION	Caution denotes a hazard. It calls attention to a procedure that, if not correctly performed or adhered to, would result in damage to or destruction of the instrument. Do not proceed beyond a caution sign until the indicated conditions are fully understood and met.

General Safety Considerations

WARNING	**For continued protection against fire hazard replace line fuse only with same type and rating (115V operation: T 5A 125V UL/ 230V operation: T 4A H 250V IEC). The use of other fuses or material is prohibited.**

WARNING	**This is a Safety Class I product (provided with a protective earthing ground incorporated in the power cord). The mains plug shall only be inserted in a socket outlet provided with a protective earth contact. Any interruption of the protective conductor, inside or outside the instrument, is likely to make the instrument dangerous. Intentional interruption is prohibited.**

CAUTION	**Ventilation Requirements:** When installing the instrument in a cabinet, the convection into and out of the instrument must not be restricted. The ambient temperature (outside the cabinet) must be less than the maximum operating temperature of the instrument by 4 °C for every 100 watts dissipated in the cabinet. If the total power dissipated in the cabinet is greater than 800 watts, then forced convection must be used.

How to Use This Guide

This guide uses the following conventions:

Front-Panel Key	This represents a key physically located on the instrument.
SOFTKEY	This represents a “softkey,” a key whose label is determined by the instrument’s firmware.
`Screen Text`	This represents text displayed on the instrument’s screen.

Documentation Map

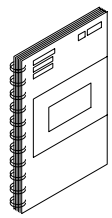

The *Installation and Quick Start Guide* provides procedures for installing, configuring, and verifying the operation of the analyzer. It also will help you familiarize yourself with the basic operation of the analyzer.

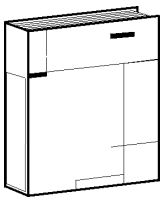

The *User's Guide* shows how to make measurements, explains commonly-used features, and tells you how to get the most performance from your analyzer.

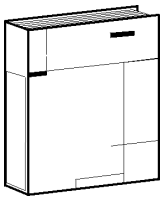

The *Reference Guide* provides reference information, such as specifications, menu maps, and key definitions.

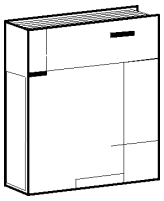

The *Programmer's Guide* provides general GPIB programming information, a command reference, and example programs. The *Programmer's Guide* contains a CD-ROM with example programs.



The **CD-ROM** provides the *Installation and Quick Start Guide*, the *User's Guide*, the *Reference Guide*, and the *Programmer's Guide* in PDF format for viewing or printing from a PC.

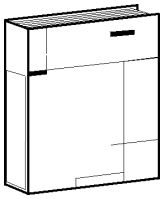

The *Service Guide* provides information on calibrating, troubleshooting, and servicing your analyzer. The *Service Guide* is not part of a standard shipment and is available only as Option 0BW, or by ordering part number 08720-90397. A CD-ROM with the *Service Guide* in PDF format is included for viewing or printing from a PC.

Contents

1. Installing Your Analyzer

Introduction 1-2
STEP 1. Verify the Shipment 1-3
STEP 2. Familiarize Yourself with the Analyzer Front and Rear Panels 1-5
Analyzer Front Panel 1-5
Analyzer Rear Panel 1-6
STEP 3. Meet Electrical and Environmental Requirements 1-7
STEP 4. Configure the Analyzer 1-9
To Configure the Standard Analyzer 1-10
To Configure an Analyzer with a High Stability Frequency Reference (Option 1D5) . . . 1-10
To Configure the Analyzer with Printers or Plotters 1-11
To Configure the Analyzer for Bench Top or Rack Mount Use 1-16
STEP 5. Verify the Analyzer Operation 1-20
To View the Installed Options 1-21
To Initiate the Analyzer Self-Test 1-22
To Run the Operator's Check 1-23
To Test the Transmission Mode 1-24
To Test the Reflection Mode 1-25
STEP 6. Back Up the EEPROM Disk 1-26
Description 1-26
Equipment 1-26
EEPROM Backup Disk Procedure 1-26

2. Quick Start: Learning How to Make Measurements

Introduction 2-2
Analyzer Front Panel 2-3
Measurement Procedure 2-5
Step 1. Choose measurement parameters with your test device connected 2-5
Step 2. Make a measurement calibration 2-5
Step 3. Measure the device 2-5
Step 4. Output measurement results 2-5
Learning to Make Transmission Measurements 2-6
Step 1. Choose the measurement parameters with your test device connected 2-6
Step 2. Perform a measurement calibration 2-7
Step 3. Measure the device 2-8
Step 4. Output measurement results 2-9
Measuring Other Transmission Characteristics 2-10
Learning to Make Reflection Measurements 2-13
Step 1. Choose measurement parameters with your test device connected 2-14
Step 2. Make a measurement calibration 2-15
Step 3. Measure the device 2-16
Step 4. Output measurement results 2-17
Measuring Other Reflection Characteristics 2-18
If You Encounter a Problem 2-23
Power-Up Problems 2-23
Data Entry Problems 2-24
No RF Output 2-24

1 Installing Your Analyzer

Introduction

This chapter shows you how to install your analyzer and confirm the correct operation, by following the steps below:

- STEP 1. Verify the Shipment on page 1-3
- STEP 2. Familiarize Yourself with the Analyzer Front and Rear Panels on page 1-5
- STEP 3. Meet Electrical and Environmental Requirements on page 1-7
- STEP 4. Configure the Analyzer on page 1-9
- STEP 5. Verify the Analyzer Operation on page 1-20
- STEP 6. Back Up the EEPROM Disk on page 1-26

STEP 1. Verify the Shipment

1. Unpack the contents of all the shipping containers.

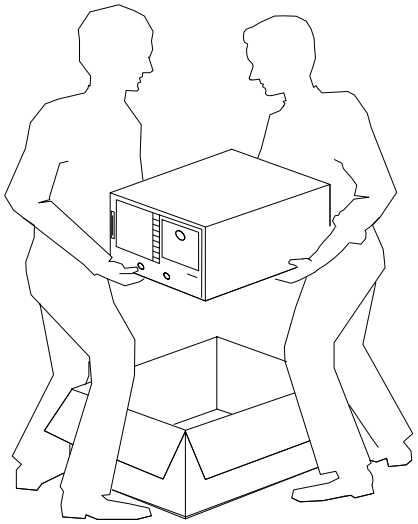

dg61e

WARNING The analyzer weighs approximately 54 pounds (25 kilograms). Use correct lifting techniques.

2. Carefully inspect the analyzer to ensure that it was not damaged during shipment.

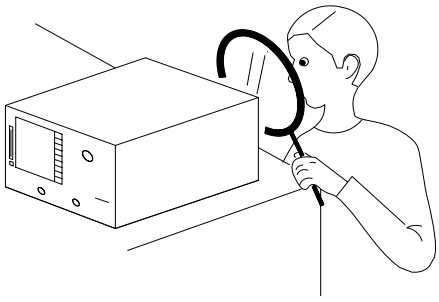

dg62e

NOTE If your analyzer was damaged during shipment, contact your nearest Agilent Technologies office or sales representative. A list of Agilent Technologies sales and service offices is provided in Table 2-1 on page 2-26.

3. Verify that all the accessories have been included with the analyzer.

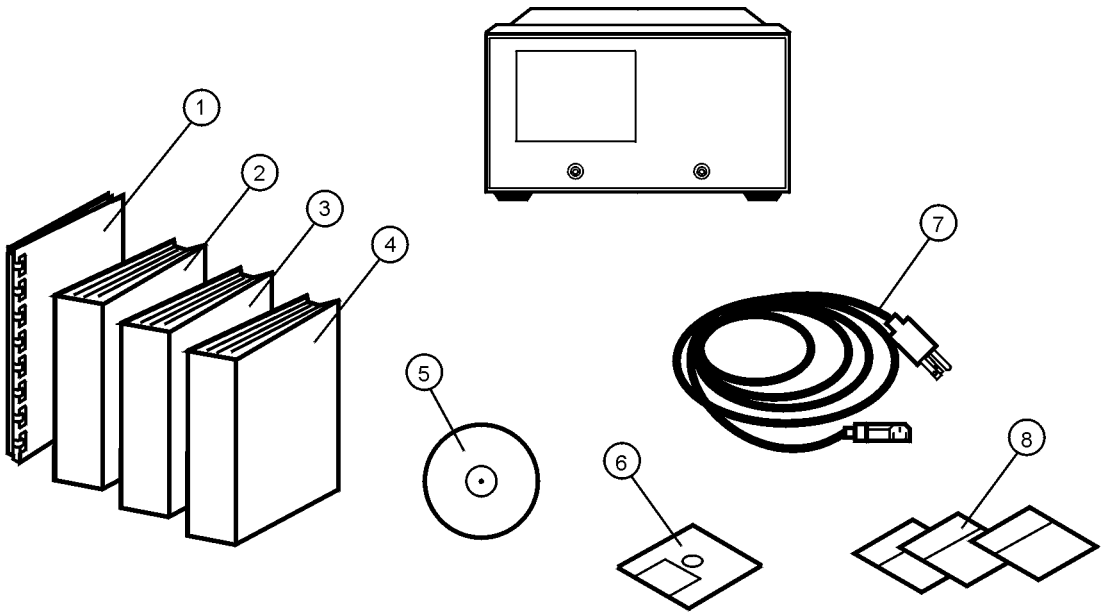

ja523e

Item Number	Part Number	Description
1	08720-90391	Installation and Quick Start Guide
2	08720-90392	User's Guide
3	08720-90393	Reference Guide
4	08753-90475	Programmer's Guide
5	08720-90418	CD-ROM
6	unique to instrument	EEPROM Backup Disk
7	unique to country	AC power cable
8	5062-3978	Rack Flange Kit (Option 1CM only)
8	5062-4072	Rack Flange Kit with Handles (Option 1CP only)
8	5062-3990	Front Handle Kit (standard)

STEP 2. Familiarize Yourself with the Analyzer Front and Rear Panels

Analyzer Front Panel

CAUTION Do not mistake the line switch for the disk eject button. See the figure below. If the line switch is mistakenly pushed, the instrument will be turned off, losing all settings and data that have not been saved.

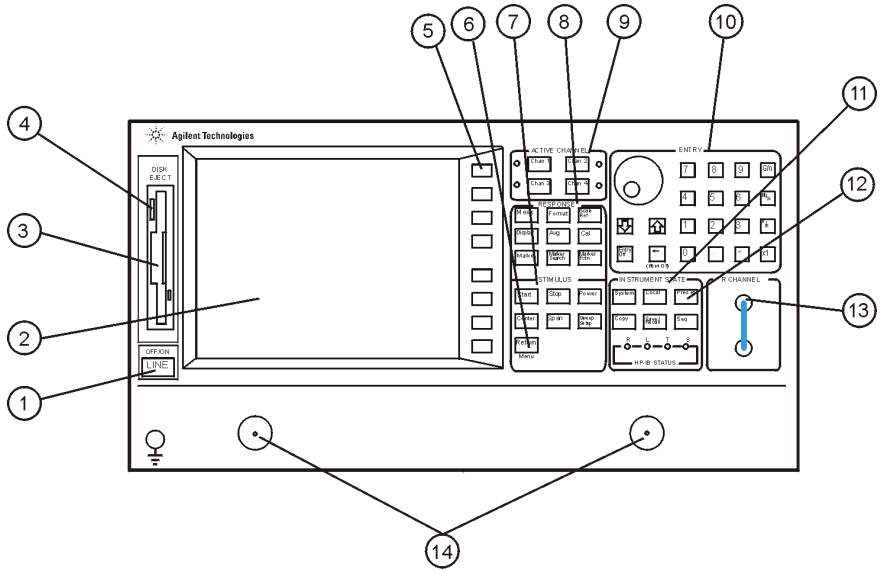

jb52e

1 LINE (power on/off) switch

2 Display

3 Disk drive

4 Disk eject button

5 Softkeys

6 Return key

7 STIMULUS function block

8 RESPONSE function block

9 ACTIVE CHANNEL keys

10 ENTRY block

11 INSTRUMENT STATE function block

12 Preset key

13 *ES models only:* R CHANNEL connectors

14 *ES models only:* PORT 1 *and* PORT 2

ET models only: REFLECTION *and* TRANSMISSION

Analyzer Rear Panel

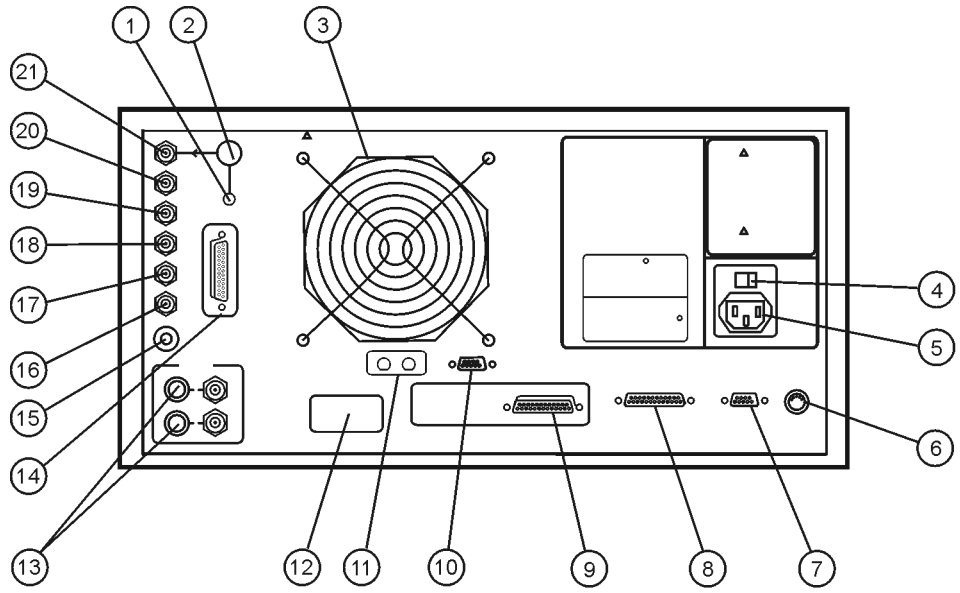

1 10 MHZ REFERENCE ADJUST[a]

2 10 MHZ PRECISION REFERENCE OUTPUT[a]

3 Fan

4 Line voltage selector switch

5 Power cord receptacle, with fuse

6 KEYBOARD input (mini-DIN)

7 RS-232 interface

8 PARALLEL interface

9 GPIB connector

10 EXTERNAL MONITOR: VGA

11 RF IN/OUT[b]

12 Serial number plate

13 BIAS INPUTS and FUSES

14 TEST SET I/O INTERCONNECT

15 MEASURE RESTART

16 LIMIT TEST

17 TEST SEQUENCE

18 EXTERNAL TRIGGER connector

19 EXTERNAL AM connector

20 AUXILIARY INPUT connector

21 EXTERNAL REFERENCE INPUT connector

a. Option 1D5 only.
b. Option 085 only.

STEP 3. Meet Electrical and Environmental Requirements

1. Set the line-voltage selector to the position that corresponds to the AC power source.

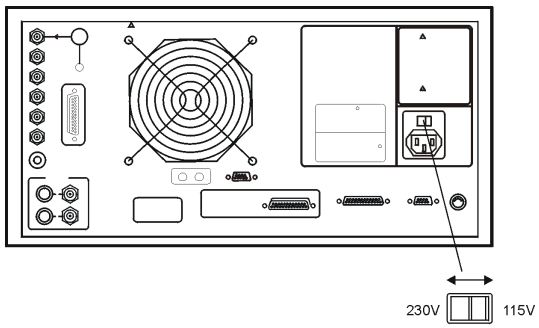

ja525e

2. Ensure the available AC power source meets the following requirements:

- 90–132 VAC
- 47–66 Hz / 400 Hz (single phase)

-or-

- 198–265 VAC
- 47–66 Hz (single phase)

The analyzer power consumption is 350 VA maximum.

3. Ensure the operating environment meets the following requirements:

- 0 to 55 °C
- < 95% relative humidity at 40 °C (non-condensing)
- < 15,000 feet (≈ 4,500 meters) altitude

Some analyzer performance parameters are specified for 25 °C ±5 °C. Refer to the *Reference Guide* for information on the environmental compatibility of warranted performance.

4. Verify that the power cable is not damaged, and that the power-source outlet provides a protective earth contact.

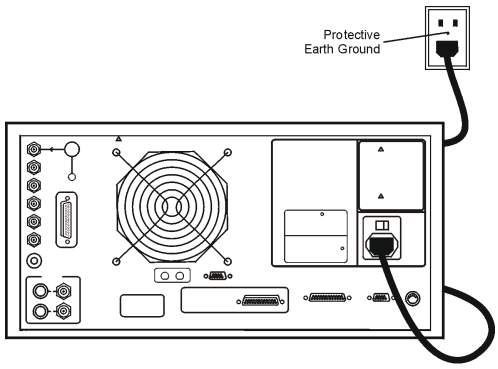

ja526e

WARNING

Any interruption of the protective (grounding) conductor or disconnection of the protective earth terminal, can result in personal injury, or may damage the analyzer.

5. Ensure there are at least six inches of clearance between the sides and back of either the stand-alone analyzer or the system cabinet.

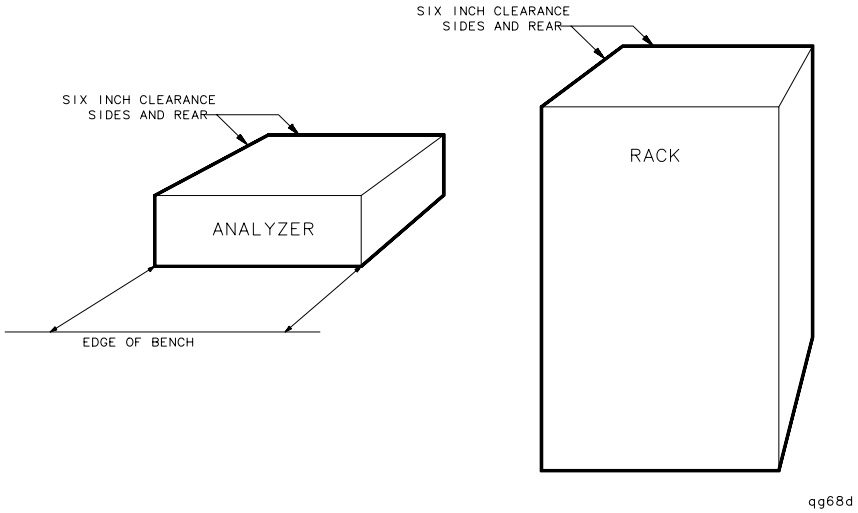

CAUTION The environmental temperature must be 4 °C less than the maximum operating temperature of the analyzer for every 100 watts dissipated in the cabinet. If the total power dissipated in the cabinet is >800 watts, then you must provide forced convection.

6. Set up a static-safe workstation. Electrostatic discharge (ESD) can damage or destroy electronic components.

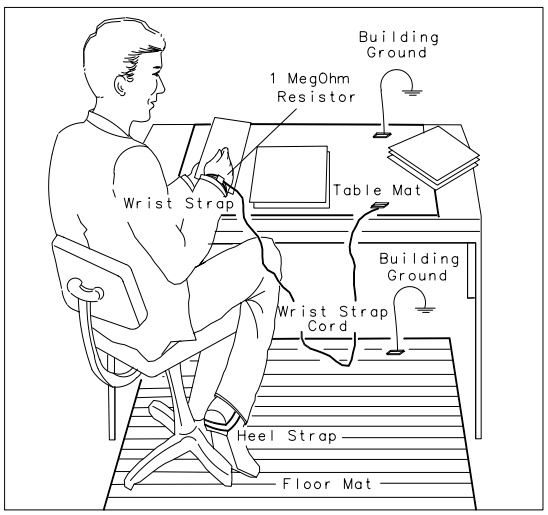

- static-control table mat and earth ground wire: part number 9300-0797
- wrist-strap cord: part number 9300-0980
- wrist-strap: part number 9300-1367
- heel-straps: part number 9300-1308
- floor mat: not available through Agilent Technologies

STEP 4. Configure the Analyzer

This step shows you how to set up your particular analyzer configuration.

- standard configuration
- Option 1D5 configuration – high stability frequency reference
- printer or plotter configuration
- rack-mount configuration

To Configure the Standard Analyzer

Connect test port cables and optional adapters if you are using other connector types.

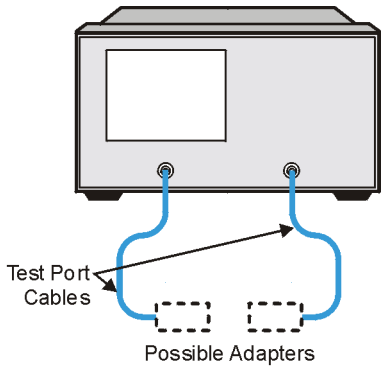

To Configure an Analyzer with a High Stability Frequency Reference (Option 1D5)

Connect the jumper cable on the analyzer rear panel as shown.

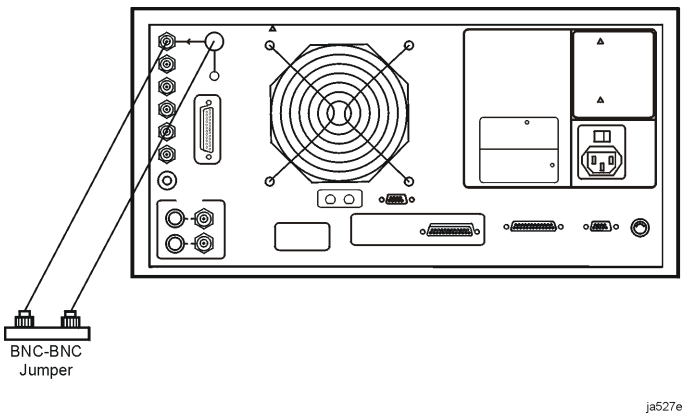

To Configure the Analyzer with Printers or Plotters

1. Connect your printer or plotter to the corresponding interface.

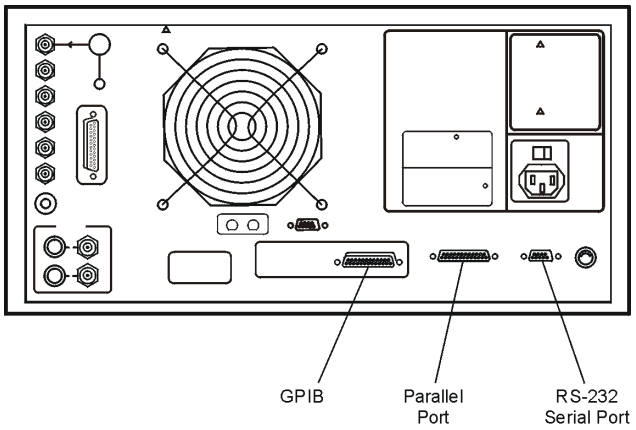

ja528e

2. If you are using the parallel interface, press Local and toggle **PARALLEL** until your choice of **COPY** or **GPIO** appears.

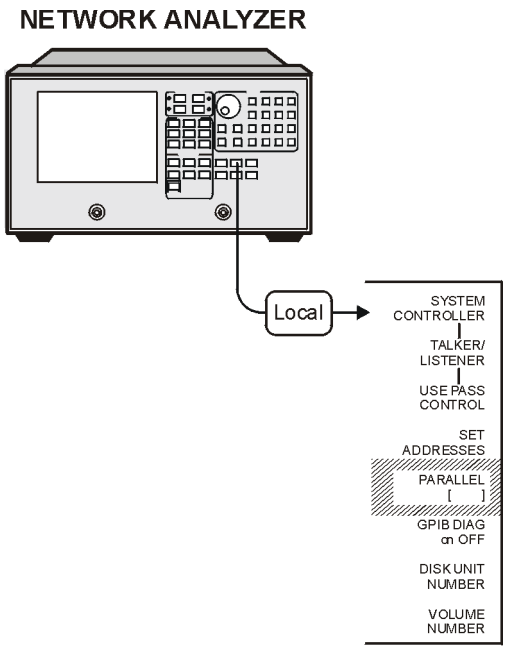

ja53e

If you choose:

COPY the parallel port is dedicated for normal copy device use (printers or plotters).

GPIO the parallel port is dedicated for general purpose I/O. The analyzer controls the data input or output through the sequencing capability of the analyzer.

3. Press **SET ADDRESSES** and then choose either **PRINTER PORT** or **PLOTTER PORT**, depending on your printer/plotter device. Or, if you are plotting your files to disk, press **SET ADDRESSES** **PLOTTER PORT** **DISK**.

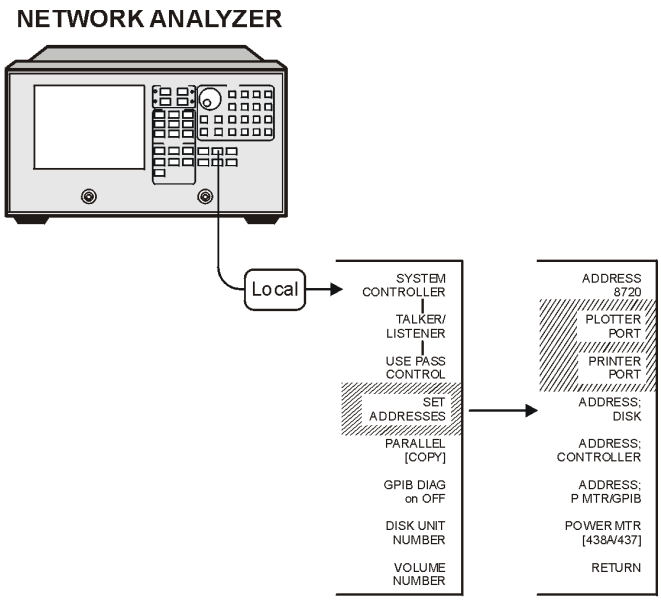

jb53e

4. Press the key that corresponds to your printer or plotter interface: **GPIB**, **PARALLEL** (parallel port), or **SERIAL** (serial port).

NOTE The plotter menu is shown as an example. It will only appear if you select **PLOTTER PORT**. Similar interface choices will appear if you select **PRINTER PORT**.

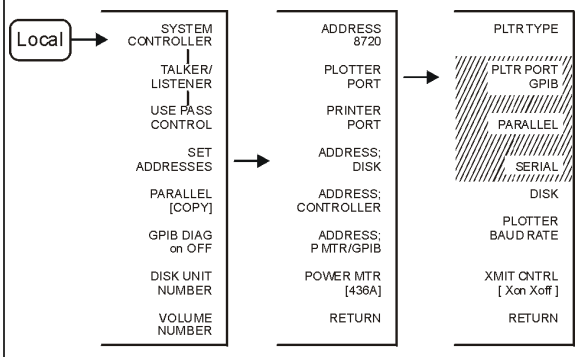

jb54e

- If you select **GPIB**, the GPIB address selection is active. Enter the GPIB address of your printer or plotter, followed by (x1).
- If you have already selected the **PARALLEL [COPY]** choice for the parallel-port configuration, you must also select **PARALLEL** in this menu in order to generate a hardcopy.

5. If you will be using the serial port, adjust the analyzer's baud rate until it is equal to the baud rate set on the peripheral by pressing **PLOTTER BAUD RATE** or **PRINTER BAUD RATE** and the ⇧ and ⇩ front panel keys.

NOTE The plotter menu is shown as an example. It will only appear if you select **PLOTTER PORT**.

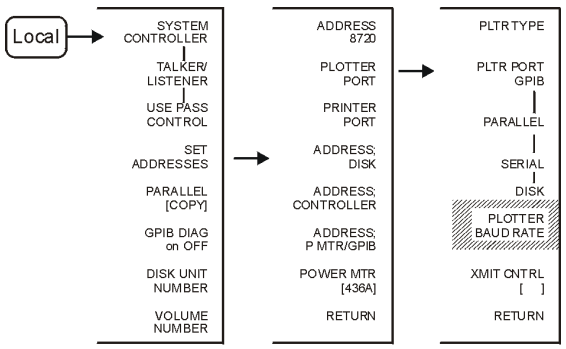

jb55e

You can set the analyzer to the following baud rates:

- 1200
- 2400
- 4800
- 9600
- 19200

6. Also, if you will be using the serial port, you must toggle the transmission control **XMIT CNTRL** (handshaking protocol) until your choice of **Xon/Xoff** or **DTR/DSR** appears (equal to the transmission control set on the peripheral). The printer menu is shown as an example. It will only appear if you select **PRINTER PORT**.

NOTE Transmission control for plotters is set programmatically.

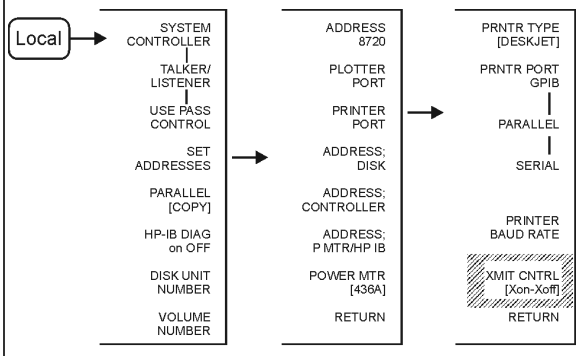

jb56e

- **Xon/Xoff** sets transmission on/transmission off (software handshake).
- **DTR/DSR** sets data terminal ready/data set ready (hardware handshake).

7. If you will be creating a plot of the data, toggle **PLTR TYPE** until your choice of **PLOTTER** or **HPGL PRT** appears.

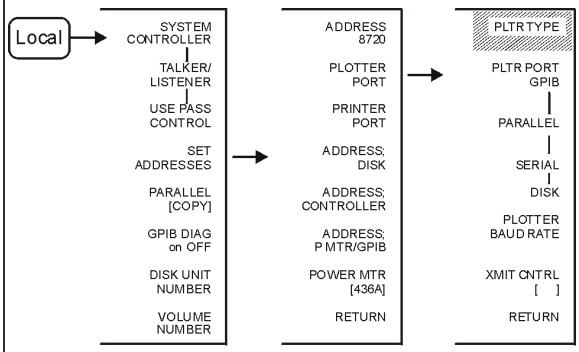

jb57e

- Choose **PLOTTER** for a pen plotter.
- Choose **HPGL PRT** for a PCL5 compatible printer.[a]

8. If you will be using a printer, toggle **PRNTR TYPE** until your printer choice[a] appears.

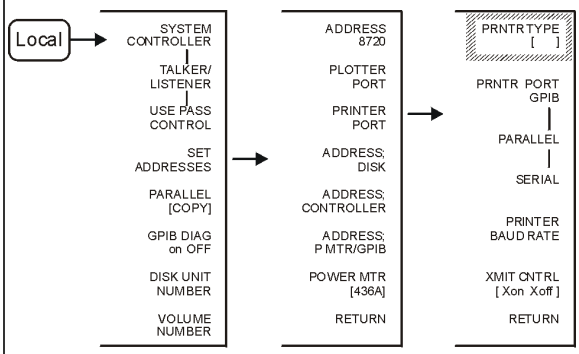

jb58e

- Choose your printer type from these Hewlett-Packard printers:
  - ❑ **THINKJET**
  - ❑ **DESKJET** (except for HP DeskJet 540 and Deskjet 850C)
  - ❑ **LASERJET**
  - ❑ **PAINTJET**
  - ❑ **DJ 540** (for use with HP DeskJet 540 and Deskjet 850C—converts 100 dpi raster information to 300 dpi raster format)
- Choose **EPSON-P2** for Epson-compatible printers (ESC/P2 printer control language).

a. For a current printer compatibility guide, consult the web page at `http://www.agilent.com/find/pcg`.

9. Press System **SET CLOCK** to begin setting and activating the time stamp feature so the analyzer places the time and date on your hardcopies and disk directories.

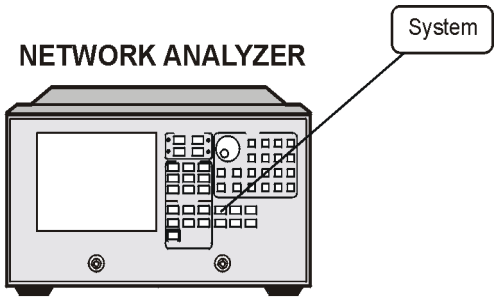

ja55e

10. Press each of the following softkeys to set the date and time, followed by x1.

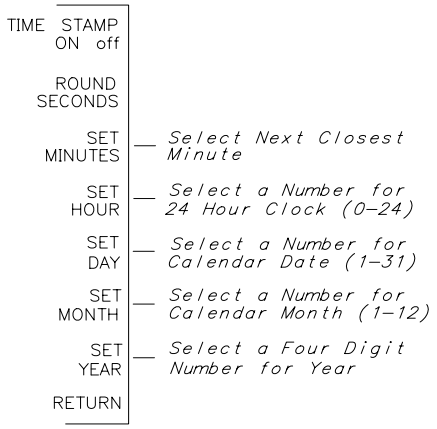

dg616e

11. Press **ROUND SECONDS** when the time is exactly as you have set it.

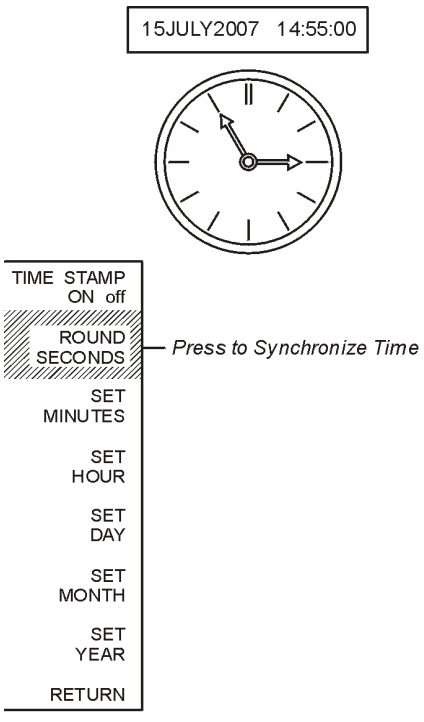

ja56e

To Configure the Analyzer for Bench Top or Rack Mount Use

There are three kits available for the analyzer:

- instrument front handles kit (standard: part number 5062-3990)
- cabinet flange kit without front handles (Option 1CM: part number 5062-3978)
- cabinet flange kit with front handles (Option 1CP: part number 5062-4072)

To Attach Front Handles to the Analyzer (Standard)

1. Ensure that the front handle kit is complete.

- (2) front handles
- (6) screws
- (2) trim strips

NOTE If any items are damaged or missing from the kit, contact the nearest Agilent Technologies sales or service office to order a replacement kit. Items within the kit (handles, flanges, screws, etc.) are not individually available.

2. Remove the side trim strips.

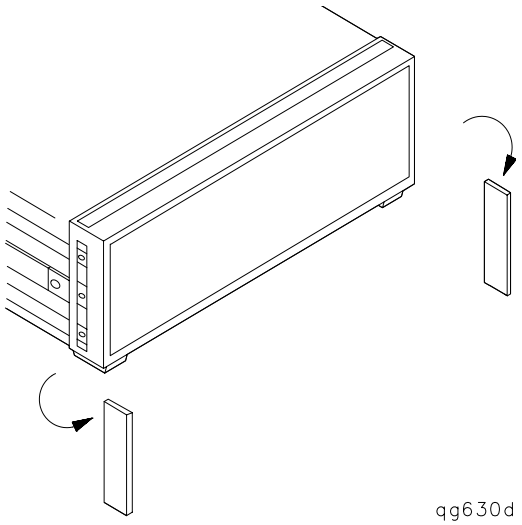

3. Attach the handles to the sides of the front panel, using three screws for each handle.

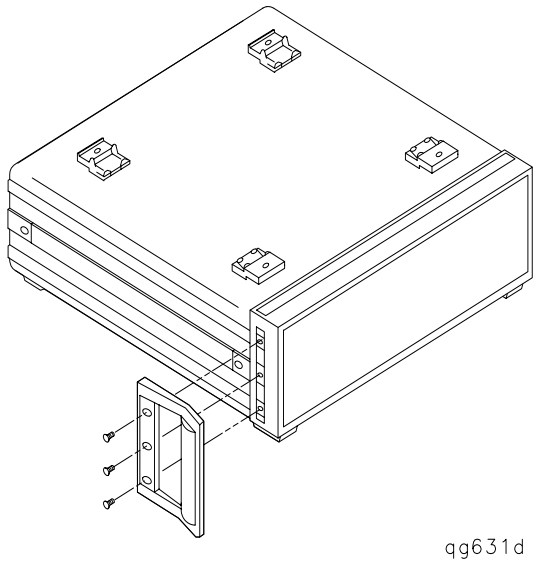

4. Place the new trim strip over the screws on the handles.

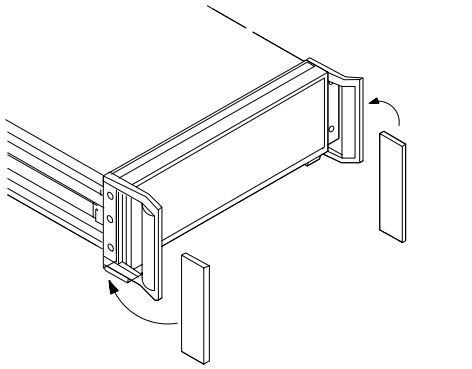

WARNING **If an instrument handle is damaged, you should replace it immediately. Damaged handles can break while you are moving or lifting the instrument and cause personal injury or damage to the instrument.**

To Attach Cabinet Flanges without Front Handles to the Analyzer (Option 1CM)

1. Ensure that the cabinet flange kit is complete.

- (2) cabinet mount flanges
- (6) screws

2. Remove side trim strips.

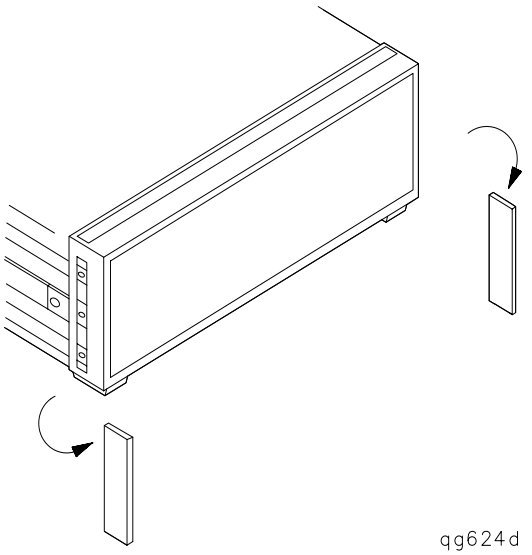

3. Attach the cabinet flanges to the sides of the front panel using three screws for each flange.

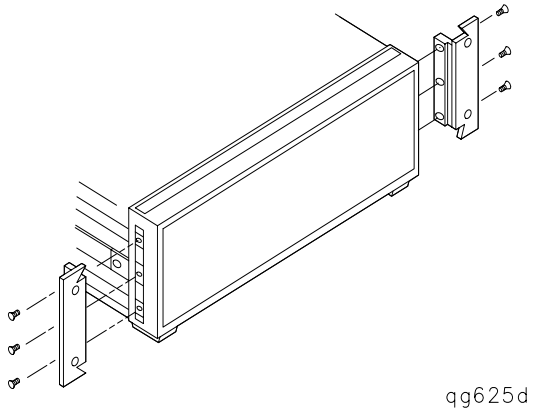

4. Remove the feet and the tilt stands before cabinet mounting the instrument.

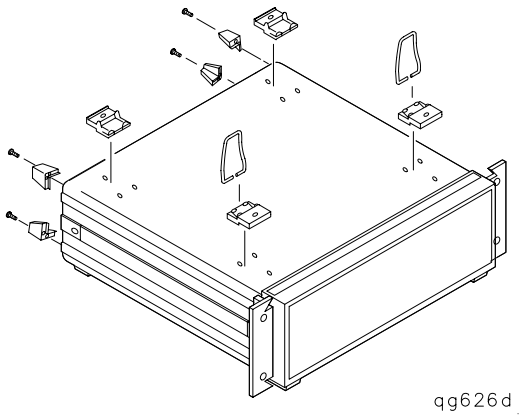

To Attach Cabinet Flanges with Front Handles to the Analyzer (Option 1CP)

1. Ensure that the cabinet flange kit with handles is complete.

- (2) cabinet mount flanges
- (2) front handles
- (6) screws

2. Remove the side trim strips.

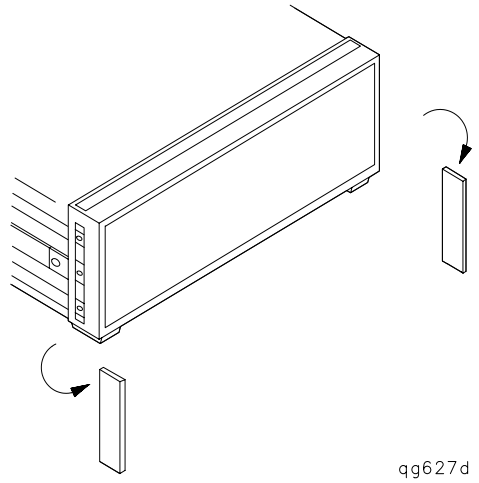

3. Attach the cabinet mount flanges and the handles to the sides of the front panel, using three screws per side. (Attach the flanges to the outside of the handles.)

4. Remove the feet and the tilt stands before cabinet mounting the instrument.

WARNING **If an instrument handle is damaged, you should replace it immediately. Damaged handles can break while you are moving or lifting the instrument and cause personal injury or damage to the instrument.**

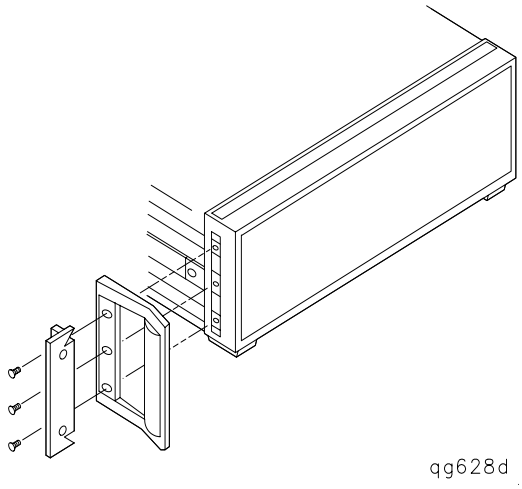

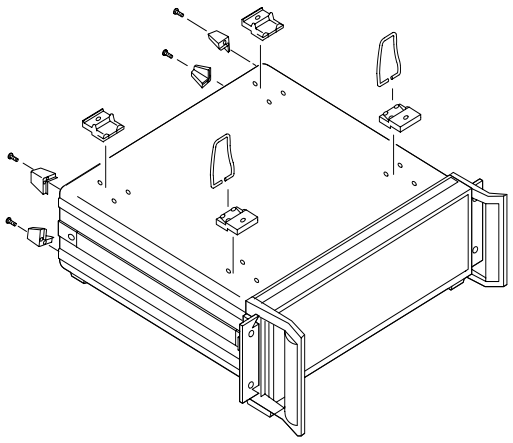

STEP 5. Verify the Analyzer Operation

The following procedures show you how to check your analyzer for correct operation:

- viewing installed options
- initiating self-test
- running operator's check
- testing transmission mode
- testing reflection mode

NOTE If the analyzer should fail any of the following tests, call the nearest Agilent Technologies sales or service office to determine the type of warranty you have. If repair is necessary, send the analyzer (and the EEPROM backup disk) to the nearest Agilent Technologies service center with a description of any failed test and any error message. Ship the analyzer using the original packaging materials. Returning the analyzer in anything other than the original packaging may result in non-warranted damage. A table listing of Agilent Technologies sales and service offices is provided in Table 2-1 on page 2-26.

NOTE The illustrations depicting the analyzer display were made using an ES model. Other analyzer displays may appear different, depending on model and options.

To View the Installed Options

1. Cycle the AC power using the LINE switch, or press System **SERVICE MENU** **FIRMWARE REVISION** .

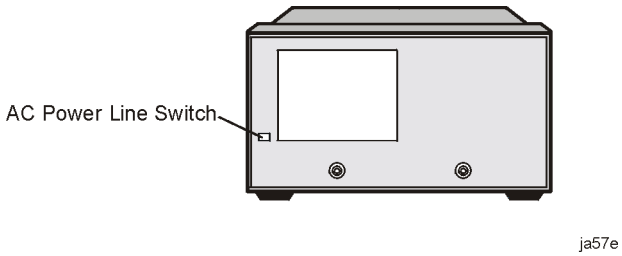

2. Locate the serial number and configuration options. Compare them to the shipment documents.

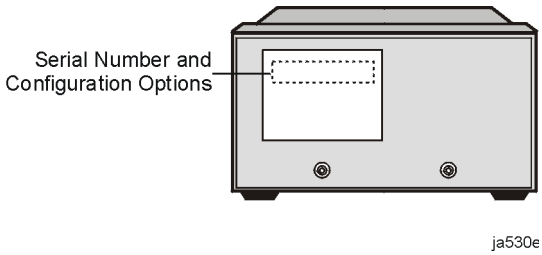

To Initiate the Analyzer Self-Test

1. Cycle the AC power using the LINE switch.

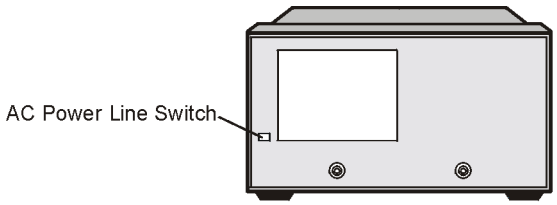

2. Watch for the following indications that the analyzer is operating correctly:

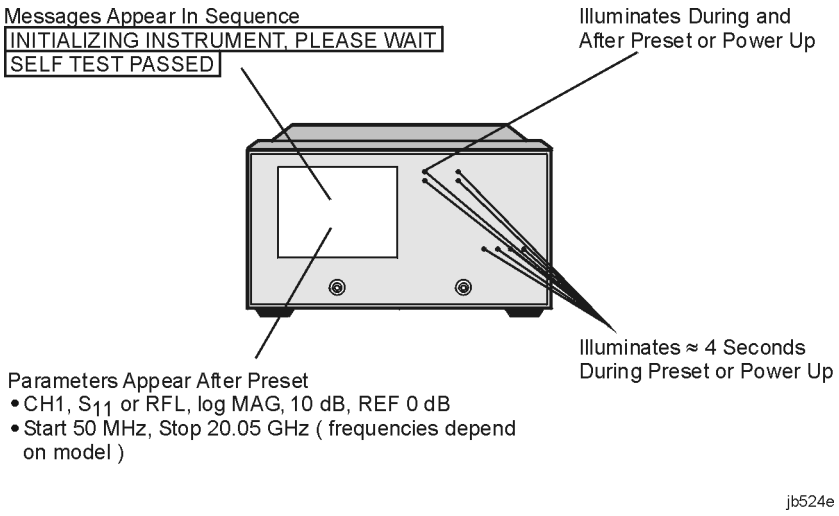

To Run the Operator's Check

1. Connect the equipment as shown.

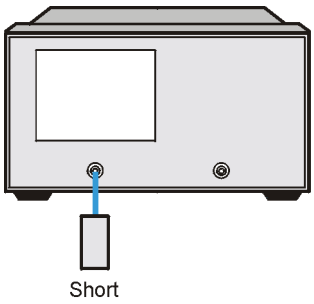

ja510e

2. Press Preset System **SERVICE MENU** **TESTS** **EXTERNAL TESTS** **EXECUTE TEST**. Follow the prompts shown on the analyzer display and then press **CONTINUE**.

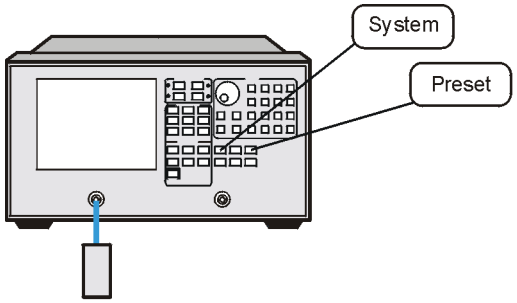

ja511e

3. *ET models only:* Press ⇧ **EXECUTE TEST**. Follow the prompts shown on the analyzer display and then press **CONTINUE**.

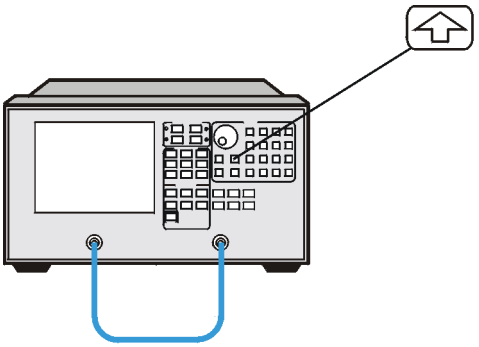

ja522e

3. *ES models only:* Press ⇧ **EXECUTE TEST**. Follow the prompts shown on the analyzer display and then press **CONTINUE**.

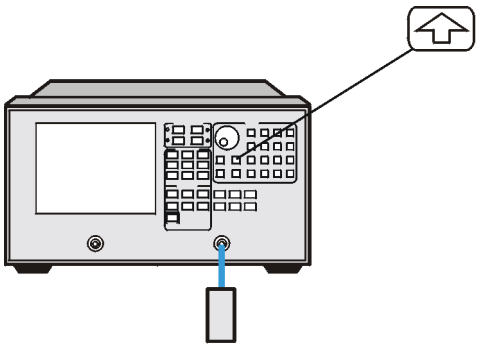

ja513e

To Test the Transmission Mode

1. Connect the equipment as shown and press Preset.

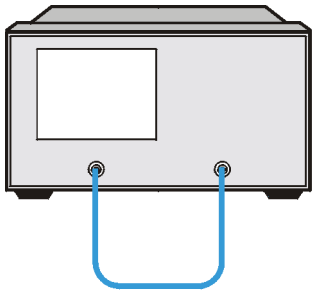

ja514e

NOTE The test port return cable should have low-loss characteristics to avoid a degradation in frequency response at higher frequencies.

2. To check the forward transmission mode for channel 2, press Chan 2 Meas **Trans: FWD S21(B/R)** or **TRANSMISSN** .

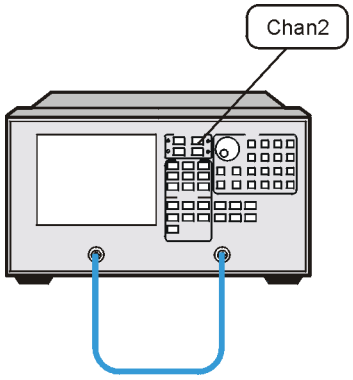

ja515e

3. Look at the measurement trace displayed on the analyzer. It should be similar to the trace below.

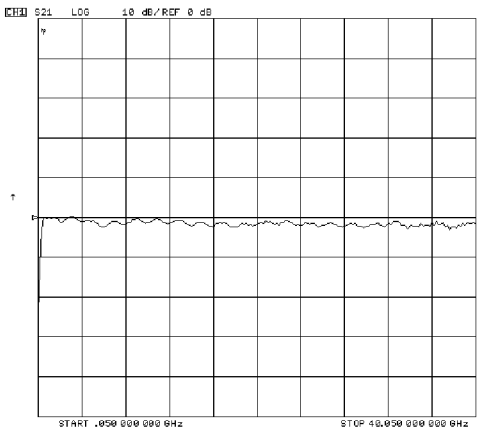

ib59e

4. *ES models only:* To check the reverse transmission mode for channel 2, press Meas **Trans: REV S12 (A/R)** . The measurement trace should be similar to the trace below.

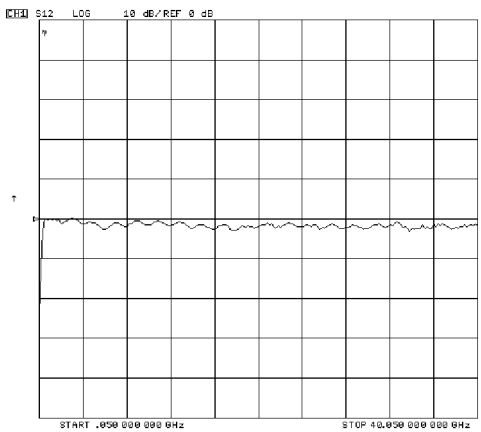

jb510e

To Test the Reflection Mode

1. Connect the equipment as shown and press Preset.

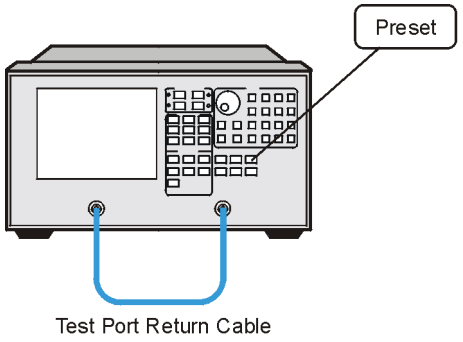

ja516e

2. Look at the measurement trace displayed on the analyzer. It should be similar to the trace below.

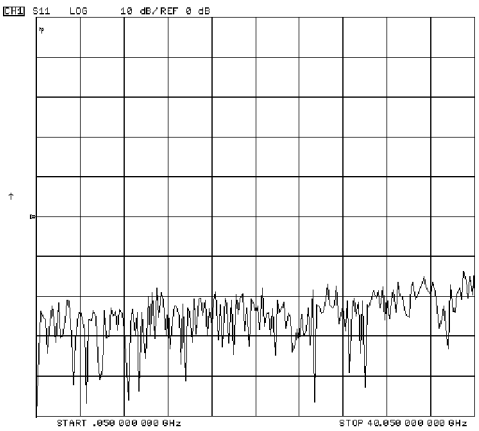

jb511e

3. *ES models only:* To check the reverse reflection mode for channel 1, press Meas **Refl: REV S22 (B/R)**. The measurement trace should be similar to the trace shown below.

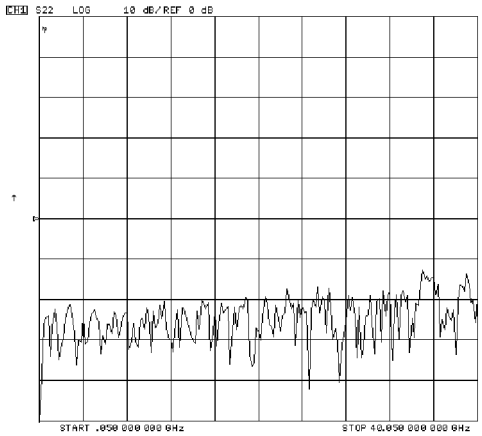

jb512e

4. If you are ready to start making measurements, continue with Chapter 2 , "Quick Start: Learning How to Make Measurements."

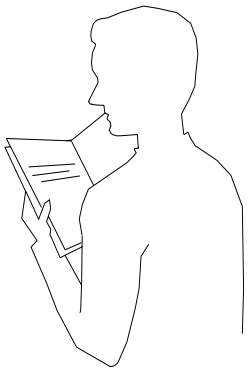

qg646d

STEP 6. Back Up the EEPROM Disk

Description

Correction constants are stored in EEPROM on the A7 controller assembly. The advantage of having an EEPROM backup disk is the ability to store all the correction-constant data to a new or repaired A7 assembly without having to rerun the correction-constant procedures. The analyzer is shipped from the factory with an EEPROM backup disk which is unique to each instrument. It is prudent to make a copy of the EEPROM backup disk so that it can be used in case of failure or damage to the original backup disk.

Equipment

3.5-inch disk.....92192A (box of 10)

CAUTION Do not mistake the line switch for the disk eject button. If the line switch is mistakenly pushed, the instrument will be turned off, losing all settings and data that have not been saved.

EEPROM Backup Disk Procedure

1. Press (Preset).
2. Insert a 3.5-inch disk into the analyzer disk drive.
3. If the disk is not formatted, press (Save/Recall) **FILE UTILITIES** **FORMAT DISK**.
   - To format a LIF disk, select **FORMAT:LIF** (The supplied EEPROM backup disk is LIF. The analyzer does not support LIF-HFS format.)
   - To format a DOS disk, select **FORMAT:DOS**.

   Press **FORMAT INT DISK** and answer **YES** at the query.
4. Press (System) **SERVICE MENU** **SERVICE MODES** **MORE**. Toggle **STORE EEPR** to ON. Then press (Save/Recall) **SELECT DISK** **INTERNAL DISK** **RETURN** **SAVE STATE** to store the correction-constants data onto floppy disk.

NOTE A default file “FILE00” is created. The file name appears in the upper left-hand corner of the display. The file type “ISTATE(E)” describes the file as an instrument-state with EEPROM backup.

5. Press **FILE UTILITIES** **RENAME FILE** **ERASE TITLE**. Use the front panel knob and the **SELECT LETTER** softkey to rename the file “FILE00” to “N*12345*” where *12345* represents the last 5 digits of the instrument's serial number. (The first character in the file name must be a letter.) When finished, press **DONE**.
6. Label the disk with the serial number of the instrument, the date, and the words “EEPROM Backup Disk.”

NOTE Whenever the analyzer is returned to Agilent Technologies for servicing and/or calibration, the EEPROM backup disk should be returned with the analyzer. This will significantly reduce the instrument repair time.

7. The EEPROM backup disk procedure is now complete.

2 Quick Start: Learning How to Make Measurements

Introduction

The information and procedures in this chapter teach you how to make measurements and what to do if you encounter a problem with your analyzer. The following sections are included:

- Analyzer Front Panel on page 2-3
- Measurement Procedure on page 2-5
- Learning to Make Transmission Measurements on page 2-6
- Learning to Make Reflection Measurements on page 2-13
- If You Encounter a Problem on page 2-23

NOTE The illustrations depicting the analyzer display were made using an ES model. Other analyzer displays may appear different, depending on model and options.

Analyzer Front Panel

CAUTION Do not mistake the line switch for the disk eject button. See the figure below. If the line switch is mistakenly pushed, the instrument will be turned off, losing all settings and data that have not been saved.

Figure 2-1 The Analyzer Front Panel

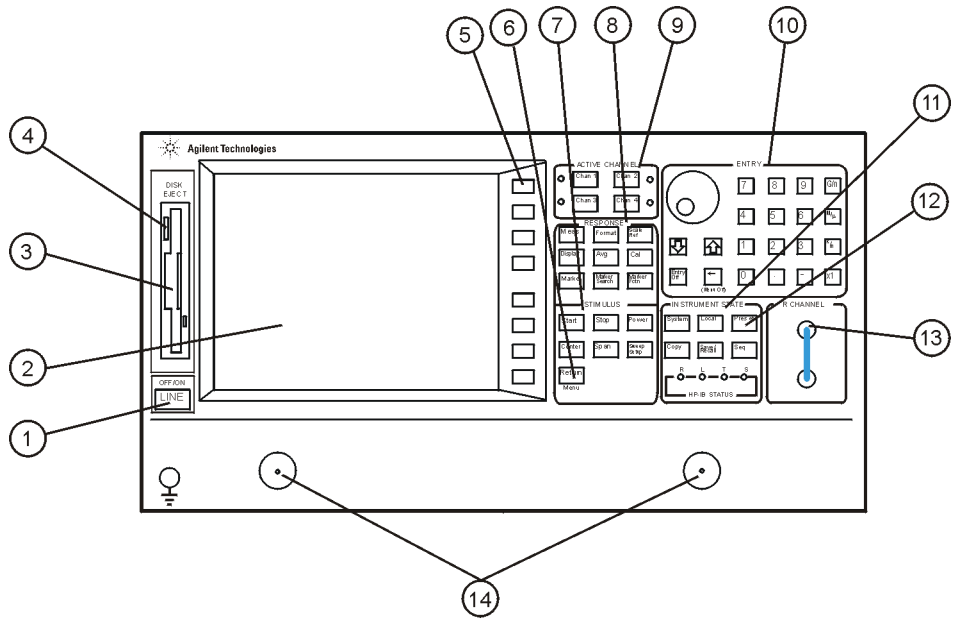

1. **LINE switch.** This switch controls AC power to the analyzer. 1 is on, 0 is off.
2. **Display.** This shows the measurement data traces, measurement annotation, and softkey labels.
3. **Disk drive.** This 3.5-inch drive allows you to store and recall instrument states and measurement results for later analysis.
4. **Disk eject button.** This button ejects the disk from the disk drive.
5. **Softkeys.** These keys provide access to menus that are shown on the display.
6. Return **key.** This key returns the previous softkey menu shown on the display.
7. **STIMULUS function block.** The keys in this block allow you to control the analyzer source's frequency, power, and other stimulus functions.
8. **RESPONSE function block.** The keys in this block allow you to control the measurement and display functions of the active display channel.

9. **ACTIVE CHANNEL keys.** The analyzer has four independent display channels. These keys allow you to select the active channel. Then any function you enter applies to this active channel. Notice that the light next to the current active channel's key is illuminated.

10. **The ENTRY block.** This block includes the knob, the step keys, and the number pad. These allow you to enter numerical data and control the markers.

    You can use the numeric keypad to select digits, decimal points, and a minus sign for numerical entries. You must also select a units terminator to complete value inputs.

11. **INSTRUMENT STATE function block.** These keys allow you to control channel-independent system functions such as the following:

    - copying, save/recall, and GPIB controller mode
    - limit testing
    - tuned receiver mode
    - frequency offset mode (Option 089)
    - test sequence function
    - time domain transform (Option 010)

    GPIB STATUS indicators are also included in this block.

12. Preset **key**. This key returns the instrument to either a known factory preset state, or a user preset state that can be defined. Refer to the "Preset State and Memory Allocation" chapter in the *Reference Guide* for a complete listing of the instrument preset condition.

13. **R CHANNEL connectors.** (*ES models only)* These connectors allow you to apply an input signal to the analyzer's R channel, for frequency offset mode.

14. *ES models only:* **PORT 1** and **PORT 2.** These ports output a signal from the source and receive input signals from a device under test. PORT 1 allows you to measure S_{12} and S_{11}. PORT 2 allows you to measure S_{21} and S_{22}.

    ET models only: **REFLECTION** and **TRANSMISSION.** The REFLECTION port allows you to make reflection measurements, outputting a signal from the source and receiving input signals from a device under test. The TRANSMISSION port allows you to make transmission measurements, receiving input signals from a device under test.

Measurement Procedure

This is a general measurement procedure that is used throughout the guide to illustrate the use of the analyzer.

Step 1. Choose measurement parameters with your test device connected

- Press the Preset key to return the analyzer to a known state.
- Connect your device under test (DUT) to the analyzer.

CAUTION Damage may result to the DUT if it is sensitive to the analyzer's default output power level. To avoid damaging a sensitive DUT, be sure to set the analyzer's output power to an appropriate level before connecting the DUT to the analyzer.

- Choose the settings that are appropriate for the intended measurement.
  - ❏ measurement type (S_{11} or reflection, for example)
  - ❏ frequencies
  - ❏ number of points
  - ❏ power
  - ❏ measurement trace format
- Make adjustments to the parameters while you are viewing the device response.

Step 2. Make a measurement calibration

Press the Cal key to begin to perform a measurement calibration using a known set of standards (a calibration kit). Error-correction establishes a magnitude and phase reference for the test setup and reduces systematic measurement errors.

Step 3. Measure the device

- Reconnect the device under test.
- Use the markers to identify various device response values if desired.

Step 4. Output measurement results

- Store the measurement file to a disk.
- Generate a hardcopy with a printer or plotter.

Learning to Make Transmission Measurements

This example procedure shows you how to measure the transmission response of a 10.24 GHz bandpass filter. The measurement parameters listed are unique to this particular test device.

For further measurement examples, refer to the “Making Measurements” chapter in the *User's Guide*.

Step 1. Choose the measurement parameters with your test device connected

1. Press the Preset key to return the analyzer to a known state.
2. Connect your test device to the analyzer as shown in Figure 2-2. Use adapters where appropriate.

CAUTION Damage may result to the device under test if it is sensitive to the analyzer's default output power level. To avoid damaging a sensitive DUT, be sure to set the analyzer's output power to an appropriate level before connecting the DUT to the analyzer.

Figure 2-2 Device Connections for a Transmission Measurement

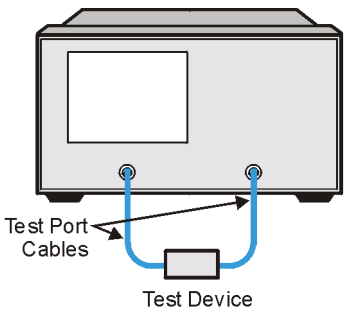

3. Choose the following measurement settings:

   Meas **Trans: FWD S21 (B/R)** or **TRANSMISSN**

   Center 10.24 G/n

   Span 5 G/n

   Scale Ref **AUTO SCALE**

   Avg **AVERAGING FACTOR** 32 x1. Toggle **AVERAGING on OFF** until ON is displayed.

4. Look at the device response to determine if these are the parameters that you want for your device measurement. For example, if the trace is noisy you may want to increase the test port output power (which increases the analyzer input power), reduce the IF bandwidth, or add averaging. Or, to better see an area of interest, you may want to change the test frequencies.

Step 2. Perform a measurement calibration

1. Disconnect your test device from the analyzer.
2. Connect a “thru” between the measurement cables, as shown in Figure 2-3. Include all the adapters that you will use in your device measurement.

   If noise reduction techniques are needed for the measurement, the instrument's settings (reduced IF BW, and /or averaging) should be selected prior to any error-correction.

Figure 2-3 Connections for a “Thru” Calibration Standard

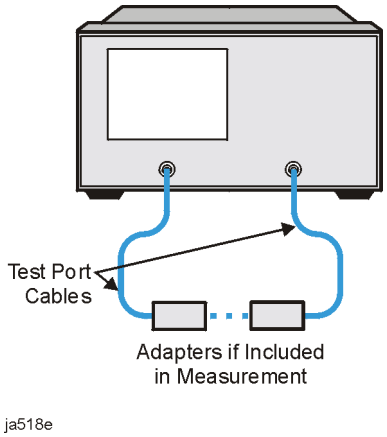

3. Press the following keys to make a transmission response calibration:

   (Cal) **CALIBRATE MENU** **RESPONSE** **THRU**

4. To save the error-correction (measurement calibration), press:

   (Save/Recall) **SELECT DISK**

5. Next, choose from the following options:

   - Choose **INTERNAL MEMORY** if you want to save the calibration results and instrument state to the analyzer's memory.
   - Choose **INTERNAL DISK** if you want to save the calibration results and instrument state to the disk that is in the analyzer's internal disk drive.
   - Choose **EXTERNAL DISK** if you want to save the calibration results and instrument state to the disk that is in an (optional) external disk drive that is configured to the analyzer.

6. Press **RETURN** **SAVE STATE** to save the error-correction (measurement calibration).

NOTE Example procedures for all types of error-correction (measurement calibrations) are located in the “Calibrating For Increased Measurement Accuracy” chapter in the *User's Guide*. For information on the analyzer operation during error-correction (measurement calibration), refer to the “Operating Concepts” chapter in the *User's Guide*.

Step 3. Measure the device

Measuring Insertion Loss

1. Reconnect your test device as in Figure 2-1 on page 2-3.
2. Reposition the measurement trace for the best view. This can be done by pressing (Scale Ref) **AUTO SCALE** and, if necessary, adjusting the reference level, reference position, or the scale/division.
3. Press (Marker) and turn the front panel knob to place the marker at a frequency of interest. Read the device's insertion loss to 0.001 dB resolution as shown in Figure 2-4.

   The analyzer shows the frequency of the marker location in the active entry area (upper-left corner of display). The analyzer also shows the amplitude and frequency of the marker location in the upper-right corner of the display.

Figure 2-4 Example Measurement of Insertion Loss

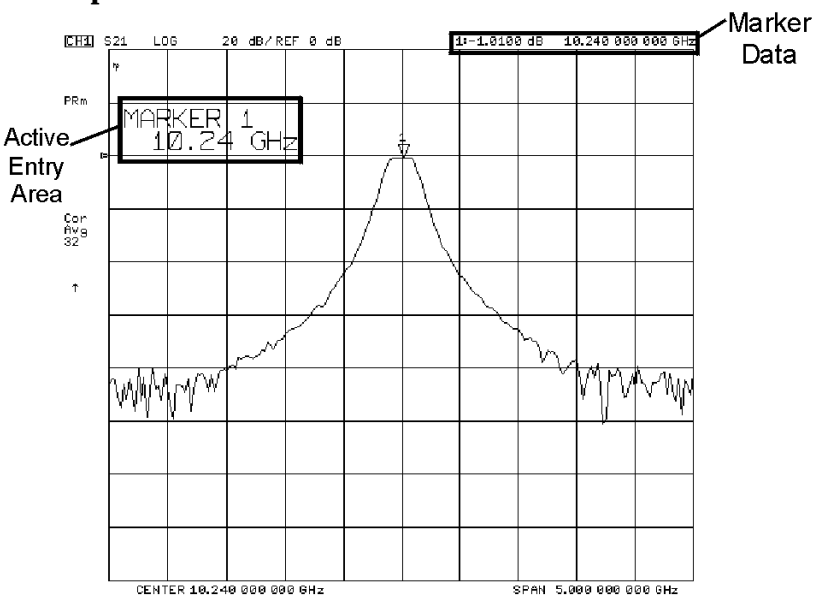

jb513e

Step 4. Output measurement results

This example procedure shows how to output (store) measurement results to a disk.

For more information on creating a hardcopy of the measurement results, refer to the "Printing, Plotting, and Saving Measurement Results" chapter in the *User's Guide*.

CAUTION Do not mistake the line switch for the disk eject button. If the line switch is mistakenly pushed, the instrument will be turned off, losing all settings and data that have not been saved.

---

1. Insert a DOS- or LIF-formatted disk into the analyzer disk drive. The analyzer does not support LIF-HFS (hierarchical file system).
2. Press Save/Recall **SELECT DISK** . Choose **INTERNAL DISK** to save the measurement results to the analyzer's internal disk drive.
3. Press **RETURN** **DEFINE DISK-SAVE** .
   - Toggle **DATA ARRAY on OFF** to ON if you want to store the error-corrected data on disk with the instrument state.
   - Toggle **RAW ARRAY on OFF** to ON if you want to store the raw data (ratioed and averaged, but no error-correction) on disk with the instrument state.
   - Toggle **FORMAT ARY on OFF** to ON if you want to store the formatted data on disk with the instrument state.
   - Toggle **GRAPHICS on OFF** to ON if you want to store user graphics on disk with the instrument state.
   - Toggle **DATA ONLY on OFF** to ON if you want to only store the measurement data of the device under test. The analyzer will *not* store the instrument state and error-correction (measurement calibration). Therefore, the saved data *cannot* be retrieved into the analyzer.

NOTE Toggling **DATA ONLY on OFF** to ON will override all of the other save options. Because this type of data is only intended for computer manipulation, the file contents of a **DATA ONLY ON off** save cannot be recalled and displayed on the analyzer.

   - Choose **SAVE USING BINARY** if you want to store data in a binary format.
   - Choose **SAVE USING ASCII** if you want to store data in an ASCII format, to later read on a computer.
4. Press **RETURN** **SAVE STATE** and the analyzer saves the file with a default title.

Measuring Other Transmission Characteristics

Using the analyzer marker functions, you can derive several important filter parameters from the measurement trace that is shown on the analyzer display.

Measuring 3 dB Bandwidth.

The analyzer can calculate your test device bandwidth between two equal power levels. In this example procedure, the analyzer calculates the –3 dB bandwidth relative to the center frequency of the filter.

1. Press Marker and turn the front panel knob to move the marker to the center frequency position of the filter passband. An alternative method is to press Marker Search **SEARCH: MAX** which should put you very close to the center of the passband.

   You can also position the marker by entering a frequency location: for example, press 10.24 G/n.

2. Press Marker **MKR ZERO** to zero the delta marker magnitude and frequency (this sets the delta marker reference). The –3 dB points will be relative to this marker.

   The softkey label changes to **MKR ZERO Δ REF= Δ** showing you that the delta reference point is the small Δ symbol.

3. Press Marker Search to enter the marker search mode.

4. Toggle **WIDTHS on OFF** to ON.

   The analyzer calculates the –3 dB bandwidth, the center frequency and the Q (quality factor) of the test device and lists the results in the upper-right corner of the display. Markers 3 and 4 indicate the location of the –3 dB points, as shown in Figure 2-5.

Figure 2-5 Example Measurement of 3 dB Bandwidth

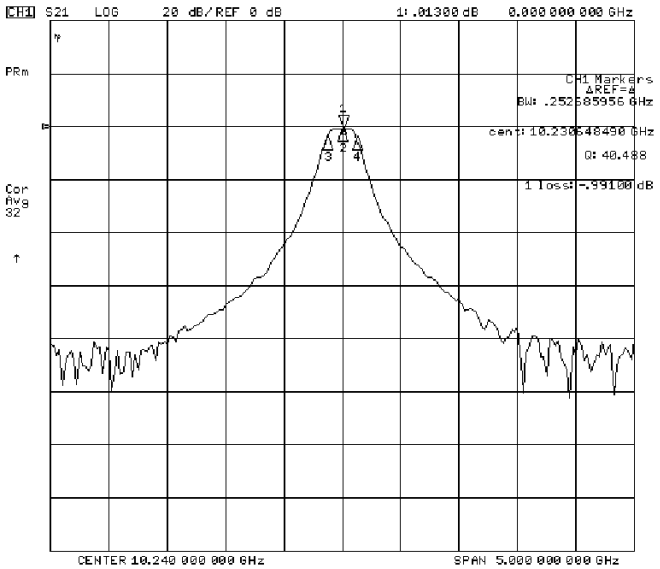

jb514e

5. Press **WIDTH VALUE** and enter (–6) (x1).

   The analyzer now calculates the bandwidth between –6 dB power levels.

6. Press (Marker) **MARKER all OFF** when you are finished with this measurement.

Measuring Out-of-Band Rejection.

1. Press **MARKER 1**. The marker appears where you placed it during the bandwidth measurement.

2. Press **MKR ZERO** (Marker Search) **SEARCH: MIN**.

   The marker automatically searches for the minimum point on the trace. The frequency and amplitude of this point, relative to the delta symbol in the center of the filter passband, appear in the upper-right corner of the display. This value is the difference between the maximum power in the passband and the power in the rejection band, that is, one of the peaks in the rejection band.

Figure 2-6 Example Measurement of Out-of-Band Rejection

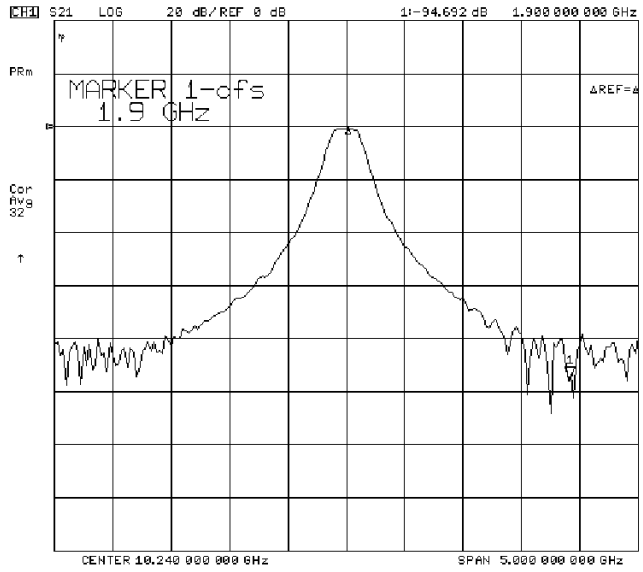

jb515e

NOTE You can use the marker search mode to search the trace for the maximum point or for any target value. The target value can be an absolute level (for example, –3 dBm) or a level relative to the location of the small delta symbol (for example: –3 dB from the center of the passband).

3. If your measurement needs some noise reduction, you can reduce the IF bandwidth or add averaging.

   - To reduce the IF bandwidth, press (Avg) **IF BW [ ]** (▽).
   - To add averaging, press (Avg), then toggle **AVERAGING on OFF** to ON.

Measuring Passband Flatness or Ripple.

Passband flatness (or ripple) is the variation in insertion loss over a specified portion of the passband.

Continue with the following steps to measure passband flatness or ripple.

1. Press Save/Recall (if necessary, scroll to the desired file using the ⇧ and ⇩ front panel keys). Press **RECALL STATE** to recall the error-corrected transmission measurement that has no markers engaged.
2. Press Marker and turn the front panel knob to move marker 1 to the left edge of the passband.
3. Press **Δ MODE MENU** **Δ REF = 1** to change the marker 1 position to the delta reference point.
4. Press **MARKER 2** and turn the front panel knob to move marker 2 to the right edge of the passband.
5. Press Marker Fctn **MARKER MODE MENU**, then toggle **MKR STATS on OFF** to ON.

   The analyzer calculates the mean, standard deviation, and peak-to-peak variation between the Δ reference marker and the active marker, and lists the results in the upper-right corner of the display. The passband ripple is automatically shown as the peak-to-peak variation between the markers.

Figure 2-7 Example Measurement of Passband Flatness or Ripple

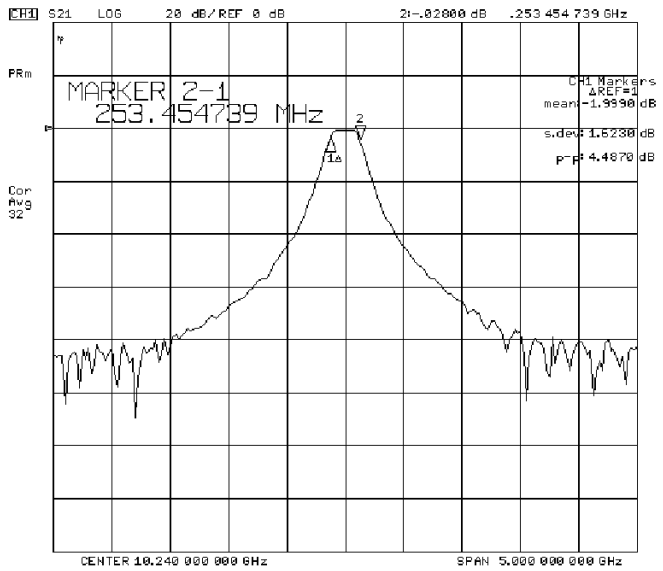

jb516e

Learning to Make Reflection Measurements

This example procedure shows you how to measure the reflection response of a 10.24 GHz bandpass filter. The measurement parameter values listed are unique to this particular test device.

For further measurement examples, refer to the "Making Measurements" chapter in the *User's Guide*.

NOTE Reflection measurements monitor only one port of a test device. When a test device has more than one port, you must ensure that the unused port(s) are terminated in their characteristic impedance (for example, 50Ω or 75Ω). If you do not terminate unused ports, reflections from these ports will cause measurement errors. Figure 2-8 on page 2-14 illustrates two ways to terminate an unused device port with the proper characteristic impedance.

The signal reflected from the device under test is measured as a ratio of the reflected energy versus the incident energy. It can be expressed as reflection coefficient, return loss, or standing-wave-ratio (SWR). These measurements are mathematically defined as follows:

reflection coefficient (Γ)	= reflected voltage / incident voltage = S_{11} or S_{22} (magnitude and phase)
magnitude of reflection coefficient (ρ)	= $\lvert\Gamma\rvert$
return loss (dB)	= –20 log (ρ), where ρ = $\lvert\Gamma\rvert$
standing-wave-ratio (SWR)	= $V_{maximum} / V_{minimum}$ = (1 + ρ) / (1 – ρ)

Step 1. Choose measurement parameters with your test device connected

1. Press the Preset key to return the analyzer to a known state.
2. Connect your test device as shown in Figure 2-8. If using a load, make sure it has the correct characteristic impedance.

CAUTION Damage may result to the device under test if it is sensitive to the analyzer's default output power level. To avoid damaging a sensitive DUT, be sure to set the analyzer's output power to an appropriate level before connecting the DUT to the analyzer.

Figure 2-8 Connections for Reflection Measurements

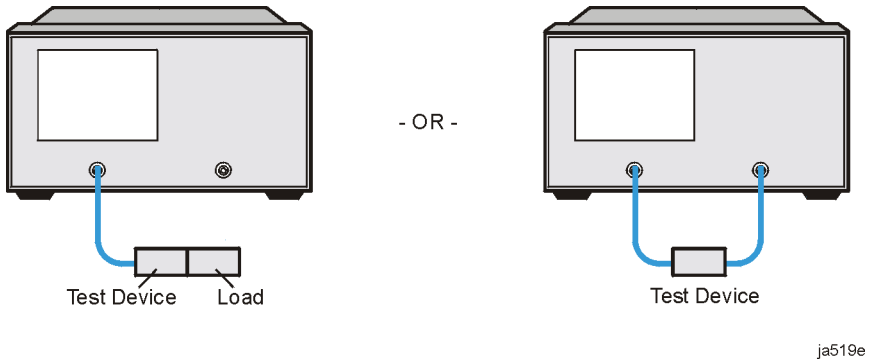

3. Choose the following measurement parameters:

   Meas **Refl: FWD S11 (A/R)** or **REFLECTION**

   Center 10.24 G/n

   Span 1 G/n

   Scale Ref **AUTO SCALE**

   Avg **AVERAGING FACTOR** 32 x1. Toggle **AVERAGING on OFF** to ON.

4. Look at the device response to determine if these are the measurement parameters that you want. For example, if the trace is noisy, you may want to increase the input power, reduce the IF bandwidth, or add averaging. To better see an area of interest, change the test frequencies.

Step 2. Make a measurement calibration

Follow these instructions to perform an S_{11} or reflection 1-port error correction:

1. Select a calibration kit that is appropriate to your device under test. Press Cal **CAL KIT [ ]** **SELECT CAL KIT**. Choose the calibration kit that is appropriate to your test device by pressing the appropriate softkey. For example, if your test device uses type-N 50Ω connectors, press **N 50Ω**. If your test device uses 7-mm connectors, press **7mm**, and so on.
2. Press **RETURN** twice, **CALIBRATE MENU** **S11 1-PORT** or **REFLECTION 1-PORT**.
3. Follow the prompts shown on the analyzer display to connect and measure an open, short, and load on PORT 1 or the REFLECTION port.

   Any choice of male/female in the calibration process should always be made for the sex that represents the test port. For example, if the test port had a male, type-N connector, you would connect the female, type-N calibration device. But when you follow the prompts on the analyzer to measure a short calibration standard, you would select **SHORT (M)**, or the sex that represents the test port.

NOTE To ensure an accurate error correction, you must connect the calibration standards to the adapters or cables that you will include in the actual device measurement.

NOTE If a mistake is made, standards can be measured more than once before pressing **DONE 1-PORT CAL**. Only the last measurement data is used.

Figure 2-9 Connections for an S_{11} or Reflection 1-Port Error-Correction

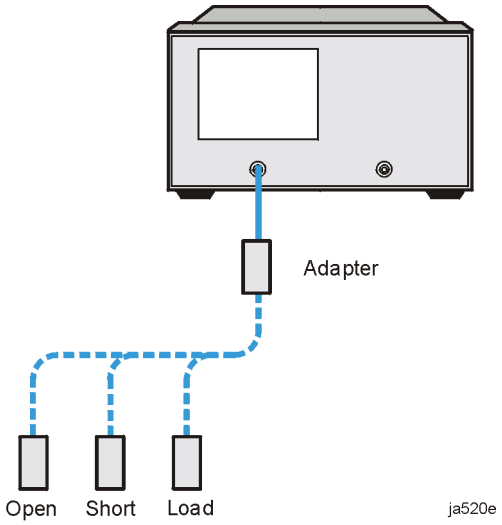

4. Press **DONE 1-PORT CAL** after measuring the three standards.
5. Press Save/Recall.

6. Press **SAVE STATE** to complete the process.

Step 3. Measure the device

Measuring Return Loss.

1. Connect your device to PORT 1 or the REFLECTION port.
2. Press Scale Ref **AUTO SCALE** to reposition the trace.
3. Press Marker to read the return loss from the analyzer display as shown in Figure 2-10.

   The device response indicates that the filter and the analyzer impedances are better matched within the frequency range of the filter passband than outside the passband. That is, the reflected signal is smaller within the filter passband than outside the passband.

   In terms of return loss, the value within the passband is larger than outside the passband. A large value for return loss corresponds to a small reflected signal just as a large value for insertion loss corresponds to a small transmitted signal.

Figure 2-10 Example Measurement of Return Loss

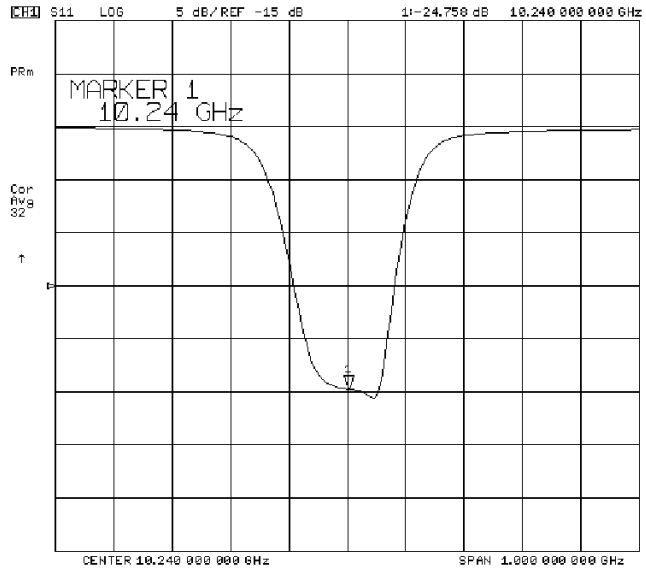

jb517e

Step 4. Output measurement results

This step in the procedure shows you how to output the measurement results to a printer.

For in-depth information on creating a hardcopy of the measurement results, refer to the "Printing, Plotting, and Saving Measurement Results" chapter in the *User's Guide*.

1. Connect a printer to the analyzer as described in "To Configure the Analyzer with Printers or Plotters" on page 1-11.
2. Press Display **MORE** **TITLE** **ERASE TITLE** and then create a title for the measurement, as shown in Figure 2-11:
   - Use an optional keyboard to type the title, or
   - Use the front panel knob and the softkey menu to select each letter of the title.
3. Press **DONE** when you finish creating the measurement title. The title appears on the upper-left corner of the analyzer display.
4. Press Local **SYSTEM CONTROLLER** to set up the analyzer as the controller. If you are using an GPIB printer, ensure that there is not another controller on the bus. (Note that this step is not required when using parallel or serial printers.)
5. Press Copy **PRINT MONOCHROME** to create a black and white hardcopy.

NOTE If you encounter a problem when printing a hardcopy, refer to "To Configure the Analyzer with Printers or Plotters" on page 1-11.

Figure 2-11 Example Measurement Title

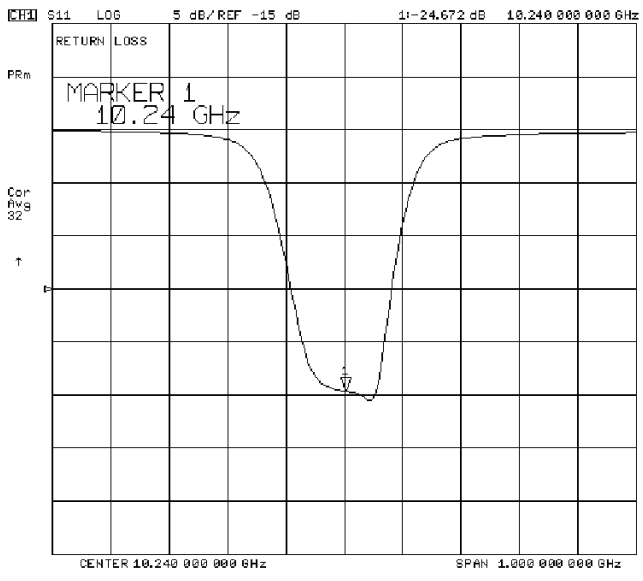

jb518e

Measuring Other Reflection Characteristics

You can derive several important filter parameters from the measurement shown on the analyzer display. The following set of procedures is a continuation of the previous reflection measurement procedure.

Measuring Reflection Coefficient

1. Press (Save/Recall) **RECALL STATE** to recall the calibrated reflection measurement that you saved earlier in this procedure.
2. Press (Format) **LIN MAG** (Scale Ref) **AUTO SCALE** so the analyzer shows the same data in terms of reflection coefficient, as shown in Figure 2-12.

   The units "mU" displayed on the analyzer are "milli-units," where "units" or "U" is used to indicate that the parameter is unitless (as opposed to dB in log magnitude format). For example, 200 mUnits = 0.2.

Figure 2-12 Example Reflection Coefficient Measurement Trace

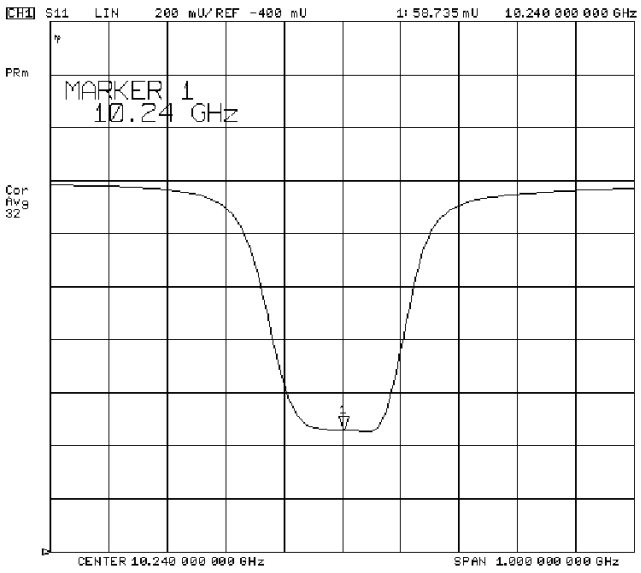

jb519e

Measuring Standing Wave Ratio (SWR)

Press (Format) **SWR** (Scale Ref) **AUTO SCALE** so the analyzer shows the same data in terms of standing-wave-ratio (SWR), as shown in Figure 2-13.

Now the analyzer shows the measurement data in the unitless measure of SWR where SWR = 1 (perfect match) is at the bottom of the display.

Figure 2-13 Example Standing-Wave-Ratio Measurement Trace

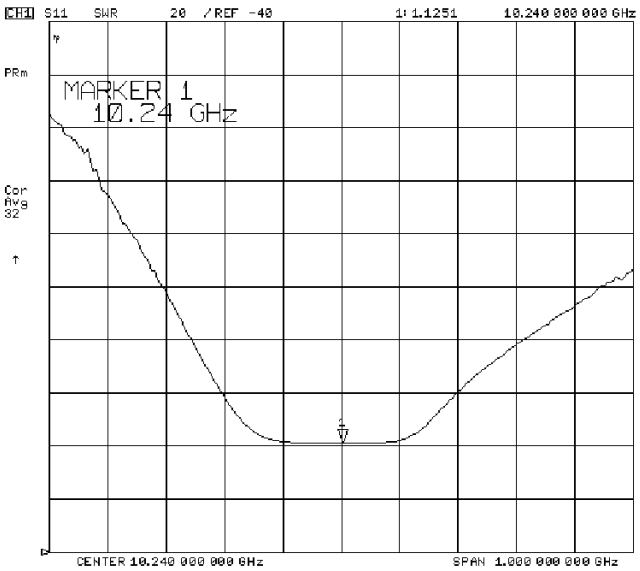

jb520e

Measuring S_{11} and S_{22} or Reflection in a Polar Format.

1. Press Format **POLAR** .
2. Press Scale Ref **AUTO SCALE** to reposition the trace, as shown in Figure 2-14.

   The analyzer shows the results of an S_{11} or reflection measurement with each point on the polar trace corresponding to a particular value of both magnitude and phase. The center of the circle represents a coefficient (Γ) of 0, (that is, a perfect match or no reflected signal). The notation `2U FS` or `2 units full scale` indicates that the outermost circumference of the scale shown in Figure 2-14 represents ρ = 2.00, or 200% reflection. The phase angle is read directly from this display. The 3 o'clock position corresponds to zero phase angle, (that is, the reflected signal is at the same phase as the incident signal). Phase differences of 90°, 180°, and –90° correspond to the 12 o'clock, 9 o'clock, and 6 o'clock positions on the polar display, respectively.

3. Press Marker Fctn **MARKER MODE MENU** **POLAR MKR MENU** .
4. Turn the front panel knob to position the marker at any desired point on the trace, then read the frequency, linear magnitude and phase in the upper right-hand corner of the display.

   - Choose **LIN MKR** if you want the analyzer to show the linear magnitude and the phase of the marker.
   - Choose **LOG MKR** if you want the analyzer to show the logarithmic magnitude and the phase of the active marker. This is useful as a fast method of obtaining a reading of the log-magnitude value without changing to log-magnitude format.
   - Choose **Re/Im MKR** if you want the analyzer to show the values of the marker as a real and imaginary pair.

NOTE You can also enter the frequency of interest, from either the numeric keypad or the optional attached keyboard, and read the magnitude and phase at that point.

Figure 2-14 Example S_{11} or Reflection Measurement Trace in Polar Format

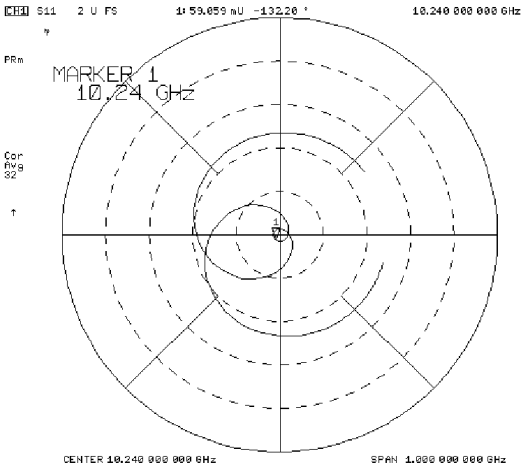

jb521e

Measuring S_{11} and S_{22} or Reflection in a Smith Chart Format.

• Measuring Impedance

The amount of power reflected from a device is directly related to the impedance of the device and the measuring system. Each value of the reflection coefficient (Γ) uniquely defines a device impedance; Γ = 0 only occurs when the device and analyzer impedance are exactly the same. The reflection coefficient for a short circuit is: Γ = 1 ∠ 180°. Every other value for Γ also corresponds uniquely to a complex device impedance, according to the equation:

$$Z_L = [(1 + \Gamma) / (1 - \Gamma)] \times Z_0$$

where Z_L is your test device impedance and Z_0 is the measuring system's characteristic impedance (usually 50Ω or 75Ω).

1. Press Format **SMITH CHART** Scale Ref **AUTO SCALE** .
2. Press Marker Fctn **MARKER MODE MENU** **SMITH MKR MENU** and turn the front panel knob to read the resistive and reactive components of the complex impedance at any point along the trace, as shown in Figure 2-1 on page 2-3. Here the complex impedance is 6.4729 – j7.5569 Ω. This is the default Smith chart marker.

   The marker annotation also gives the series inductance or capacitance (132.87 pF in this example). The complex impedance is capacitive in the bottom half of the Smith chart display and is inductive in the top half of the display.

   - Choose **LIN MKR** if you want the analyzer to show the linear magnitude and the phase of the reflection coefficient at the marker.
   - Choose **LOG MKR** if you want the analyzer to show the logarithmic magnitude and the phase of the reflection coefficient at the active marker. This is useful as a fast method of obtaining a reading of the log magnitude value without changing to log magnitude format.
   - Choose **Re/Im MKR** if you want the analyzer to show the values of the reflection coefficient at the marker as a real and imaginary pair.
   - Choose **R+ jX MKR** (the default marker format) to show the real and imaginary parts of the device impedance at the marker. Also shown is the equivalent series inductance or capacitance (the series resistance and reactance, in ohms).

Figure 2-15 Example Impedance Measurement Trace

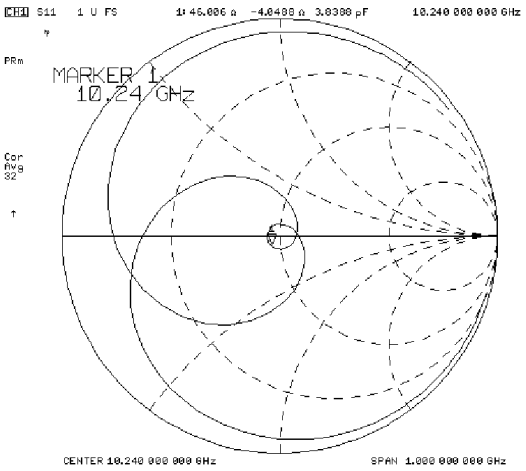

jb522e

• **Measuring Admittance** To change the display to an inverse Smith chart graticule and the marker information to read admittance, press **G+ jB MKR**.

As shown in Figure 2-16, the marker reads admittance data in the form G+jB, where G is conductance and B is susceptance, both measured in units of Siemens (equivalent to mhos: the inverse of ohms). Also shown is the equivalent parallel capacitance or inductance.

Figure 2-16 Example Admittance Measurement Trace

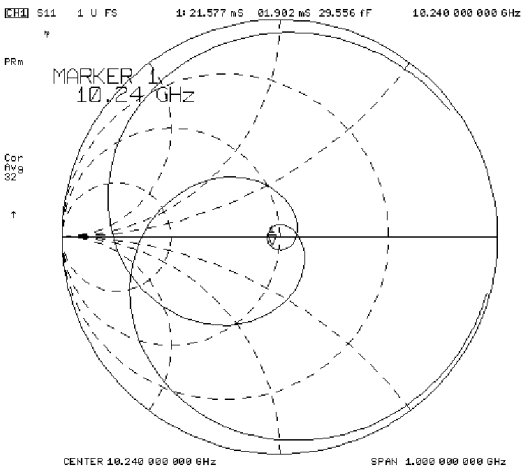

jb523e

If You Encounter a Problem

If you have difficulty when installing or using the analyzer, check the following list of commonly encountered problems and troubleshooting procedures. If the problem that you encounter is not in the following list, refer to additional troubleshooting sections in the *Service Guide*.

Power-Up Problems

If the analyzer display does not light:

- Check that the power cord is fully seated in both the main power receptacle and the analyzer power module.
- Check that the AC line voltage selector switch is in the appropriate position (230 V/115 V) for your available power supply.
- Check that the analyzer AC line fuse is not open.

WARNING **For continued protection against fire hazard, replace the fuse with the same type and rating.**

Refer to Figure 2-17 to remove the fuse from the power module. You can use a continuity light or an ohmmeter to check the fuse. An ohmmeter should read very close to zero ohms if the fuse is good. For 115V operation, use Fuse, T 5A 125V, UL listed/CSA certified to 248 standard (part number 2110-1059). For 230V operation, use Fuse, T 4A H 250V, built to IEC 127-2/5 standard (part number 2110-1036).

- Contact the nearest Agilent Technologies office for service, if necessary. A list of Agilent Technologies sales and service offices is provided in Table 2-1 on page 2-26.

Figure 2-17 Line Fuse Removal and Replacement

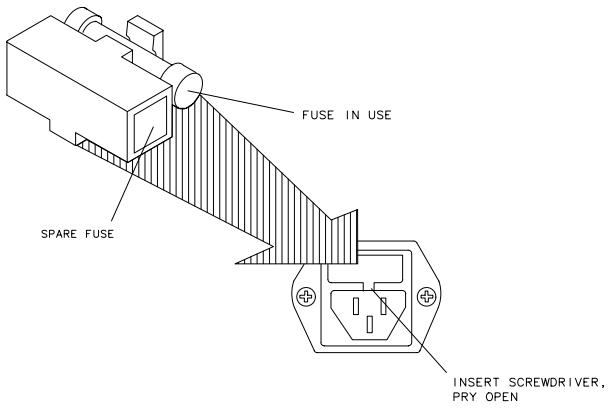

If the display lights, but the ventilation fan does not start:

❏ Check that the fan is not obstructed. To check the fan, follow these steps:

1. Switch the LINE power to the off position.
2. Check that the fan blades are not jammed.

❏ Contact the nearest Agilent Technologies office for service, if necessary. A list of Agilent Technologies sales and service offices is provided in Table 2-1 on page 2-26.

Data Entry Problems

If the data entry controls (keypad, knob, arrow keys) do not respond:

❏ Check that the ENTRY OFF function is not enabled.

The ENTRY OFF function is enabled after you press the Entry Off key. To return to normal entry mode, press any function key that has a numeric parameter associated with it, for example, Start.

❏ Check that none of the keys are stuck.

❏ Check that the selected function key accepts data.

For example, Scale Ref accepts data, but System does not.

❏ Check that the analyzer's "R" GPIB STATUS light is not illuminated.

If the analyzer's "R" GPIB STATUS light is illuminated, a test sequence may be running, or a connected computer controller may be sending commands or instructions to, or receiving data from, the analyzer. Press Local if you want to return to LOCAL control.

If the parameter you are trying to enter is not accepted by the analyzer:

❏ Ensure that you are not attempting to set the parameter greater than or less than its limit. Refer to the *User's Guide* for parameter limits.

No RF Output

If there is no RF signal at the front-panel port:

❏ Check that the signal at the test port is switched on.

1. Press Power and toggle **SOURCE PWR** to ON.

NOTE On ES models, it is possible to set the source power to come from PORT 2 instead of PORT 1, so you must check the power at the correct port. With factory preset, the power comes from PORT 1.

❏ If you are applying external modulation (AM) to the analyzer, check the external modulating signal or external gate/trigger signals for problems.

CAUTION If the error message:

```
CAUTION: OVERLOAD ON INPUT X, POWER REDUCED
```

appears on the analyzer display, too much source power is being applied at the input. In such a case, the input power will need to be reduced before the source power will remain on.

- ❑ If phase-lock error messages appear on the analyzer display, check that the front panel jumper is secure on the R CHANNEL connectors. If the jumper is secure and the error messages still appear, contact your nearest Agilent Technologies office for service. A list of Agilent Technologies sales and service offices is provided in Table 2-1 on page 2-26.

Table 2-1 Agilent Technologies Sales and Service Offices

UNITED STATES

Instrument Support Center
Agilent Technologies
(800) 403-0801

EUROPEAN FIELD OPERATIONS

Headquarters
Agilent Technologies S.A.
150, Route du Nant-d'Avril
1217 Meyrin 2/ Geneva
Switzerland
(41 22) 780.8111

France
Agilent Technologies France
1 Avenue Du Canada
Zone D'Activite De Courtaboeuf
F-91947 Les Ulis Cedex
France
(33 1) 69 82 60 60

Germany
Agilent Technologies GmbH
Agilent Technologies Strasse
61352 Bad Homburg v.d.H
Germany
(49 6172) 16-0

Great Britain
Agilent Technologies Ltd.
Eskdale Road, Winnersh
Triangle Wokingham,
Berkshire RG41 5DZ England
(44 118) 9696622

INTERCON FIELD OPERATIONS

Headquarters
Agilent Technologies
3495 Deer Creek Rd.
Palo Alto, CA 94304-1316
USA
(415) 857-5027

Australia
Agilent Technologies Australia Ltd.
31-41 Joseph Street
Blackburn, Victoria 3130
(61 3) 895-2895

Canada
Agilent Technologies (Canada) Ltd.
17500 South Service Road
Trans-Canada Highway
Kirkland, Quebec H9J 2X8
Canada
(514) 697-4232

Japan
Agilent Technologies Japan, Ltd.
Measurement Assistance Center
9-1, Takakura-Cho,
Hachioji-Shi,
Tokyo 192-8510, Japan
TEL (81) -426-56-7832
FAX (81) -426-56-7840

Singapore
Agilent Technologies Singapore (Pte.) Ltd.
150 Beach Road
#29-00 Gateway West
Singapore 0718
(65) 291-9088

Taiwan
Agilent Technologies Taiwan
8th Floor, H-P Building
337 Fu Hsing North Road
Taipei, Taiwan
(886 2) 712-0404

China
China Agilent Technologies
38 Bei San Huan X1 Road
Shuang Yu Shu
Hai Dian District
Beijing, China
(86 1) 256-6888

Index

Numerics

3 dB bandwidth
  measuring, 2-10
6 dB bandwidth
  measuring, 2-11

A

active channel keys
  location, 2-4
admittance
  measuring, 2-22
Agilent Technologies Sales and Service Offices, 2-26
analyzer configuration, 1-9—1-19
  attaching cabinet flanges with front handles, 1-19
  attaching cabinet flanges without front handles, 1-18
  attaching front handles, 1-17
  for bench top use, 1-16
  for rack mount use, 1-16
  option 1D5, 1-10
  standard, 1-10
  with printers or plotters, 1-11

B

backing up EEPROM disk, 1-26
bench top configuration, 1-16

C

connectors
  R channel, 2-4

D

definitions
  magnitude of reflection coefficient, 2-13
  reflection coefficient, 2-13
  return loss (dB), 2-13
  standing-wave-ratio (SWR), 2-13
disk drive location, 2-3
disk eject button, 2-3
display location, 2-3

E

EEPROM backup disk, 1-26
electrical and environmental requirements, 1-7
entry block location, 2-4

F

front panel, 1-5, 2-3

H

high stability frequency reference configuration, 1-10

I

impedance
  measuring, 2-21
insertion loss
  measuring, 2-8
installation, 1-2
instrument state function block keys, 2-4

L

line switch, 2-3
location
  active channel keys, 2-4
  disk drive, 2-3
  disk eject button, 2-3
  display, 2-3
  entry block, 2-4
  instrument state function block keys, 2-4
  line switch, 2-3
  PORT 1, 2-4
  PORT 2, 2-4
  Preset key, 2-4
  R channel connectors, 2-4
  REFLECTION port, 2-4
  response function block keys, 2-3
  Return key, 2-3
  softkeys, 2-3
  stimulus function block keys, 2-3
  TRANSMISSION port, 2-4

M

making measurements, 2-1—2-22
measurement procedure, 2-5
  choosing measurement parameters, 2-5
  measuring a device, 2-5
  outputting measurement results, 2-5
  performing a measurement calibration, 2-5
measuring insertion loss with marker functions, 2-10

O

operation, 1-20—1-25
  installed options, 1-21
  operator's check, 1-23
  self-test, 1-22
  testing reflection mode, 1-25
  testing transmission mode, 1-24
operator's check, 1-23
out-of-band rejection
  measuring, 2-11

P

parts list
  parts received, 1-4
passband flatness
  measuring, 2-12
passband ripple
  measuring, 2-12
plotter configuration, 1-11
polar format
  measuring, 2-20
PORT 1
  location, 2-4
PORT 2
  location, 2-4
Preset key
  location, 2-4
printer configuration, 1-11
problems, data entry, 2-24
  controls do not respond, 2-24
  parameters not accepted, 2-24
problems, power-up, 2-23—2-24
  display does not light, 2-23
  display lights but fan does not start, 2-24
problems, RF output, 2-24
  no RF signal at front panel port, 2-24

R

R channel connectors
  location, 2-4
rack mount configuration, 1-16
rear panel, 1-6
reflection measurements, 2-13—2-22
  admittance, 2-22
  choosing measurement parameters, 2-14
  impedance, 2-21
  measuring in polar format, 2-20
  measuring in smith chart format, 2-21
  measuring reflection coefficient, 2-18
  measuring return loss, 2-16
  measuring standing wave ratio (SWR), 2-19
  measuring the device, 2-16
  outputting measurement results, 2-17

performing a measurement
calibration, 2-15
REFLECTION port
location, 2-4
requirements
electrical and environmental, 1-7
response function block keys
location, 2-3
Return key, location, 2-3
return loss
measuring, 2-16

S

Sales and Service Offices, 2-26
shipment, verifying, 1-3
smith chart, 2-21
smith chart format
measuring, 2-21
softkeys, location, 2-3
standard analyzer configuration, 1-10
standing wave ratio (SWR)
measuring, 2-19
stimulus function block keys
location, 2-3

T

transmission measurements, 2-6—2-12
3 dB bandwidth, 2-10
6 dB bandwidth, 2-11
choosing the measurement parameters, 2-6
insertion loss, 2-8
measuring insertion loss with marker functions, 2-10
measuring the device, 2-8
out-of-band rejection, 2-11
outputting measurement results, 2-9
passband flatness, 2-12
passband ripple, 2-12
performing a measurement calibration, 2-7
TRANSMISSION port
location, 2-4
troubleshooting, 2-23—2-25

V

verifying the shipment, 1-3