Keysight Technologies
PNA Receiver Reduces Antenna/RCS Measurement Test Times

White Paper

Abstract
As antennas become more complex, their test requirements are also becoming more complex, requiring more data to fully evaluate the performance of today's modern antennas. At the same time, competition and time-to-market concerns are driving the need to reduce the cost of test for most antenna test facilities. This places stringent demands on our test facilities, personnel, and resources. To be competitive, new and creative ways are needed to meet these new demands. Fortunately, technology is changing, and these advances in technology if properly applied, can provide a way to reduce total test times and increase the productivity of test ranges. This paper will look at this new technology and examine how it can be applied to antenna measurements to significantly reduce measurement times. This paper will describe new technology features applicable to antenna/RCS measurements, configuration diagrams, typical antenna/RCS measurement scenarios, and measurement time comparisons for the different measurement scenarios. This will allow antenna test professionals to determine the measurement time reductions and productivity gains that can be achieved for their specific measurement ranges and test scenarios.

Keywords: Antenna, radar cross section, measurement, RCS, instrumentation, test equipment, configurations, measurement systems, commercial products, speed, time.

KEYSIGHT TECHNOLOGIES

Introduction

Antenna measurements have been evolving for many years, and they will continue to evolve in the future. When we choose to operate in a high technology industry, we have to accept the fact that we will need to change with advances in technology. New technologies bring better, faster, more accurate measurement capabilities. To remain competitive in this industry, we need to evolve and change with technology, or get left behind. Prior to the 1980s, antenna test engineers were using dedicated microwave receivers for antenna test applications. In 1985 some companies began using a network analyzer as a receiver for antenna test applications. New technology had brought greater stability, accuracy, repeatability, and reliability to instrumentation, and the early adopters of this new technology applied it to antenna and RCS measurements [1]. Using a network analyzer as an antenna receiver was a new and novel idea in 1985. The companies and individuals who adopted using the network analyzer technology to make antenna/RCS measurements were leading innovators [2], and many others followed this technology lead in later years. Over the years, with many antenna test facilities adopting this new superior technology, the network analyzer evolved into a dedicated microwave receiver specifically for antenna/RCS measurements [3].

With the next generation of network analyzers now available to the industry, history shows that the antenna test community needs to evaluate this new technology. They need to determine if it can provide similar gains in improved performance, accuracy, and speed in order to provide a better value for the antenna test community.

This paper examines the productivity improvements achievable with the Keysight Technologies, Inc. new PNA series of network analyzers when they are utilized in various antenna/RCS measurement applications.

Economic Factors Affecting Antenna/RCS Testing

There are two main factors affecting the antenna test professional today; one is technical, and the other is economic in nature. On the technical side, antenna designers are facing increasing demands for higher performance antennas, and they are delivering much more complex antennas to meet these needs. The antenna test professionals are seeing antennas with much more technical complexity, which require significantly more test data to completely characterize these higher performance antennas.

The second demand facing the antenna test professional today is economic in nature. Even as antennas are becoming more complex, we find ourselves faced with the need to be economically competitive in designing, developing, and verifying the performance of the finished product. These economic considerations involve time-to-market, and cost-of-test issues. Time to market involves how quickly a company can design and develop a new antenna. A company that can develop new antennas quickly will be more likely to win development contracts, ensuring the future viability of the company. Cost of test directly affects the costs of manufacturing and producing antennas. Driving down the test time reduces the cost of test, which reduces the manufacturing costs and makes the company more cost competitive. Future viability of companies depends upon their ability to drive down the cost of their products while still maintaining a very high-quality product. This often requires a lot of measurement performance data be acquired and analyzed. A successful company needs to be able to address both the technical challenges of building modern high-performance antennas, as well as being able to develop and produce high-quality antennas in a cost-effective, and competitive manner. Thus the antenna test professional often finds themselves facing the dilemma of being required to take increased amounts of test data in less time than was allocated in the past.

Introducing A New Series of Network Analyzers

The new PNA series of network analyzers have many new features that are of particular interest to antenna/RCS test professionals. It is useful to examine these features that can contribute to productivity gains in antenna/RCS test applications. For testing multiple channel antennas, the PNA receiver has four internal test receivers (A, B, R1, R2), and it can measure up to three test channels (or antenna ports) simultaneously. Thus the PNA can be configured to measure A/R1, B/R1, R2/R1 simultaneously in one data acquisition period. For a monopulse antenna, being able to acquire data from all three test ports simultaneously in one data acquisition period can reduce the data acquisition times significantly, and eliminate the need for external PIN switches. The PNA has a new 'reverse frequency sweep' capability that is particularly useful in near-field measurements. The PNA has a very versatile arbitrary sweep mode that allows users to sweep in ascending, descending, or arbitrary and random frequency jumps. For near-field applications, the PNA can sweep from F1 to Fn on one direction of the scanner movement, and then sweep from Fn to F1 when the scanner moves in the opposite direction. This reverse sweep feature of the PNA allows dual directional scans for near-field measurements, which is an important feature for minimizing the data acquisition and scanning times. For buffering and transferring acquired data, the PNA has up to 16 channels, each with up to 16,001 data point capacity. Normally only one of these channels is needed for antenna/RCS data acquisitions. For data intensive acquisitions, the fast data transfer out of the PNA is useful for transferring the data from the PNA to an external computer. Using DCOM over the LAN port of the PNA for data transfer, up to 1601 data points can be transferred in 2 mS, and 16,001 data points can be transferred in 121 mS. For near-field acquisitions, it is possible to transfer the data acquired after each grid point in a scan, and the examples in this paper use this procedure. Another very useful feature in the PNA for near-field applications is the user selectable bandwidth. It allows the user to select a bandwidth that will minimize data acquisition time at a trade off of measurement sensitivity. Because the probe is located very close to the AUT, high measurement sensitivity is not the most important parameter, and thus wider bandwidths can be used to minimize data acquisition times. In the near-field examples in this paper, the bandwidth of the analyzer has been set to 35 kHz to minimize data acquisition times.

Near-field Antenna Measurements

A near-field antenna measurement configuration utilizing a PNA network analyzer is shown in Figure 1. This configuration is similar to a near-field measurement system that utilizes an 8720 network analyzer. However, the new PNA network analyzer has several new features and capabilities that will significantly improve the productivity of your measurement system. You will note from the configuration, that the three test ports of the AUT are being routed directly to the receiver, and are measured simultaneously. Thus for a monopulse antenna, all three test ports can be measured simultaneously from one trigger and in one data acquisition interval.

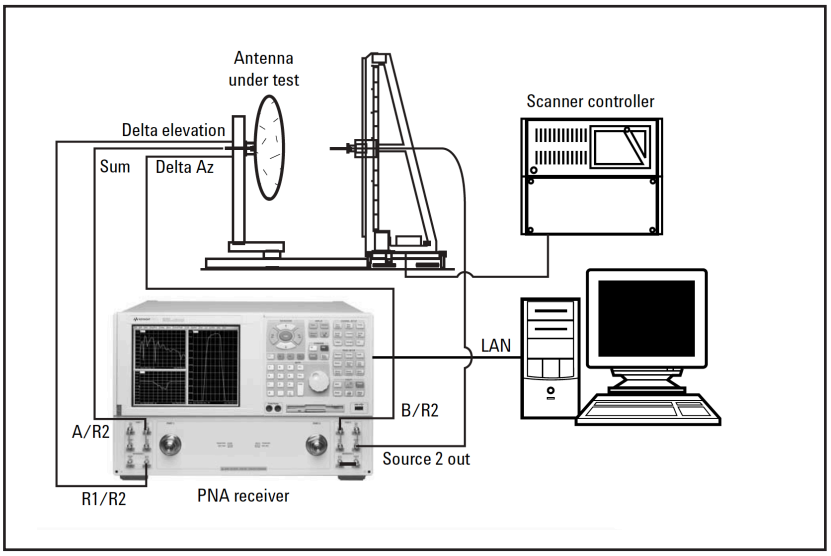

Figure 1: Typical near-field antenna measurement configuration using a PNA with option 014.

To illustrate the near-field measurement speed of the PNA receiver, it is useful to consider a typical measurement scenario. Lets assume that we desire to test an active array monopulse antenna with three test ports (sum, delta azimuth, and delta elevation) and we desire to measure the co-polarized response at multiple frequencies in X-band. Lets assume that there are 256 active beam states, and that the near-field sampling grid requires 100 x 100 sampling points. The number of data points to be acquired at one grid point can be calculated as (# antenna ports) * (# polarizations) * (# beam states) * (# frequencies). As long as this number of data points is < 16,001 points, one channel of the PNA can be used to acquire all theses data points, and then transfer them from the PNA to the external computer before the scanner gets to the next grid point. All the near-field examples in this paper used this procedure.

For the PNA measurement times, the formula for calculating the measurement times is not as straight forward as for the 85301B/C systems. The time for the PNA to make the near-field data acquisition consists of the acquisition, frequency switching, retrace, and analyzer overhead times. Rather than trying to develop a formula for determining the measurement speed, the actual measurement scenarios were set up on the PNA, and the measurement times were measured. This method provides actual measurement times for the PNA in a variety of measurement scenarios. Since actual measurement scenarios of various different users will vary from the examples provided in this paper, average data acquisition times per data point are provided as a guideline for users who may want to estimate their particular measurement scenario's acquisition time.

Table 1 provides a summary of the data acquisition times achieved with the PNA network analyzer, in a variety of different near-field measurement scenarios. The first thing that is noticed from the different measurement scenarios is that as the complexity of the measurement increases, the measurement times increase, which is to be expected. The data acquisition times for the PNA vary from 17 minutes for a simple measurement, to 7.7 hours for a very complex measurement at 62 frequencies. The average data acquisition time per data point is calculated by setting up the PNA for the measurement scenario, measuring the time it takes to measure the data, and then dividing the measurement time by the number of data points. For example, for the measurement scenario of 3 antenna test ports, 1 polarization, 64 beam states, and five frequencies, requires (3*1*64*5) = 960 data points per near-field grid point. The PNA can measure these 960 data points in 73 mS, so the average data acquisition time per data point is calculated as 73 mS/960 = 76 µS. The table indicates that as the measurement complexity is increased (primarily the number of test frequencies increase), the average data acquisition time per data point increases. Having these average data acquisition times should be useful for estimating the approximate data acquisition time for a similar measurement scenario.

Table 1. Near-field antenna measurement scenarios

Number of test ports	3	3	3	3	3	3
Polarizations	1	1	1	1	1	1
Electronic beam states	64	256	256	256	256	256
Frequencies	5	5	10	20	40	62
Sampling grid: 100 x 100						
PNA measurement time:	17 min.	41 min.	1.4 hr.	2.6 hr.	5.0 hr.	7.7 hr.
Average data acquisition time /data point (µS):	76	52	48	47	46	45
Probe velocity (cm/S):	11.6	4.2	2.0	1.0	0.5	0.35
85301B/C measurement time:	44 min.	2.5 hr.	4.9 hr.	9.8 hr.	25.3 hr	36 hr.
Average data acquisition time /data point (µS):	231	208	208	208	208	208
Probe velocity (cm/S):	4.2	1.2	0.6	0.3	Stepped	Stepped

Corresponding measurement times for the 85301B/C antenna measurement system using the 8530A microwave receiver are also shown. This provides a point of comparison to a known measurement system, and highlights the productivity improvement achievable when a PNA receiver is utilized in a near-field antenna measurement system. In the examples shown, the PNA ranges from two to five times as fast as the 85301B/C measurement system. This would provide a significant productivity enhancement to any near-field antenna range.

It should be noted that for very basic near-field antenna measurements where only one frequency is measured, the maximum probe velocity often determines the total measurement time. As a result, the faster data acquisition speed of the PNA will not result in a reduction of the total measurement time. However, if the near-field range were ever expected to test a more complex antenna, having a PNA receiver would be a good capital investment in the near-field range.

Far-field Antenna Measurements

A far-field antenna measurement system utilizing a PNA receiver is very similar to the 85301B/C, and has been described previously [4]. To calculate a single angular increment measurement time for both the 85301B/C and PNA, the following formula is used:

((R*C*P+ABD)*BP+S)*F, where:
- R = Receiver data acquisition time
- C = Channels of data to be measured (3 antenna test ports)
- P = Number of polarizations states to be measured
- ABD = Additional beam dwell time (if required)
- BP = Number of electronic beam positions
- S = Source settling time
- F = Number of frequencies to be measured

Once an angular increment acquisition time is determined, it is a simple calculation to determine the total AUT measurement time, as well as check the positioner velocity.

Far-field applications require triggering the receiver for each antenna test port, unless it is practical to connect the microwave test signal from each antenna test port directly to the three receiver input channels on the PNA. There are two factors that tend to limit the measurement speeds achievable in far-field measurements. One is the frequency agility of the remote source; the second is the maximum velocity the positioner can be rotated. PSG sources, which are operated remotely with the PNA, have a 4-6 mS frequency switching speed. The 85301B/C antenna measurement system, which utilizes the 8360 synthesizers, has a 6-8 mS frequency switching speed. We do not see dramatic improvements in total measurement times when using a PNA receiver in a far-field application because the relatively slow frequency agility of the remote sources that are used with both the PNA and 85301B/C systems tend to dominate the total measurement time. The positioner velocity is the second factor that can limit the measurement speed. For simple far-field test scenarios, both the 85301B/C and PNA based measurement systems are much faster than the maximum velocity that the antenna positioner can be rotated. Therefore, the maximum positioner velocity rather than the data acquisition speed of the measurement instrumentation will determine the total measurement time. Because of these two factors, dramatic improvements in total measurement times are not usually achieved with a PNA receiver ina far-field application.

Table 2 shows several different far-field measurement scenarios. As can be seen, for low complexity measurements, there is none to minimal difference in total measurement times due to the positioner velocity limiting the data acquisition rate. As the measurement scenarios become more complex, with multiple electronic beam positions, and multiple frequencies, there is an improvement in the total measurement time with the PNA receiver over the 85301B/C system. As the far-field measurement scenarios become more complex, usually with the number of test frequencies being greater than 10, the positioner's minimum velocity capability begins to limit the total data acquisition time. Positioners are generally operated at a continuous velocity, but as this velocity slows down to accommodate all the data acquisition between each angular sample point, the positioner reaches a speed where it can no longer rotate at a constant velocity. For most positioners, their minimum velocity is about 0.1 revolutions per minute. When data acquisition requirements become so intensive that the positioner must be slowed below this speed, the positioner will have to be operated in stepped motion, and then the positioner's slow speed will determine the total test time. For complex far-field measurements with frequencies greater than about 10 points, a faster external source would greatly reduce this restriction.

Table 2. Far-field antenna measurement scenarios

Number of test ports	3	3	3	3	3	3
Polarizations	1	1	1	1	1	2
Electronic beam states	1	64	54	128	256	256
Frequencies	5	1	5	5	10	20
Theta movement: ±30° in 1° inc.						
Elevation steps: ±30° in 1° inc.						
PNA measurement time:	12 min.	12 min.	17 min.	25 min.	68 min.	4.0 hr.
Positioner velocity (RPM):	3	3	3	1.0	0.29	Stepped
85301B/C measurement time:	12 min.	12 min.	23 min.	35 min.	109 min.	6.6 hrs.
Positioner velocity (RPM):	3	3	0.7	0.4	Stepped	Stepped

Radar Cross-section Measurements

For Radar Cross-Section measurements (RCS), the primary concerns for the measurement instrumentation are sensitivity, frequency agility, and data acquisition times. The PNA family of network analyzers is ideally suited for RCS applications. Many RCS ranges have utilized either the 8530A/8511 or the 8720 for the microwave RCS receiver. These receivers were chosen for their ability to provide fast frequency sweeps with good sensitivity. The harmonic sampling downconversion technology utilized in these receivers provided the fast sweep frequency agility desired for RCS applications, but had a tradeoff of not as much sensitivity as a fundamental or low-harmonic external mixing downconversion technology. The 85301B system which utilized external mixers had the advantage of the superior sensitivity that was desired for RCS measurement applications, but had a tradeoff of requiring a relatively slower STEP frequency sweep (instead of a RAMP sweep utilized in the 8530A/8511 system) and the associated slower STEP frequency agility speeds of 6-8 mS. While both the harmonic sampling and external mixing systems were widely used in RCS applications, test engineers had to choose between a receiver downconversion technology that was either optimized for measurement sensitivity or frequency agility. The PNA has excellent measurement sensitivity, and fast data acquisition speeds, both of which are very important for RCS applications. The PNAs utilize mixer based downconversion technology to provide excellent measurement sensitivity. With the source and receiver both located in the same instrument, it can provide very fast frequency agility speeds of 119 µS per frequency point. With the new PNA, the RCS professional no longer has to choose between a receiver either optimized for sensitivity or one optimized for measurement speeds. The new PNAs provide the sensitivity, frequency agility, and fast data acquisition speeds required by RCS ranges in one new instrument. Figure 2 shows a typical RCS measurement configuration using a PNA analyzer.

Notice that two of the PNA's receivers are used to measure the vertical and horizontal returned component simultaneously. Also, the internal transfer switch of the PNA is used to switch the internal source to either the vertical or horizontal input of the transmit horn antenna. This eliminates the need for an external PIN Switch.

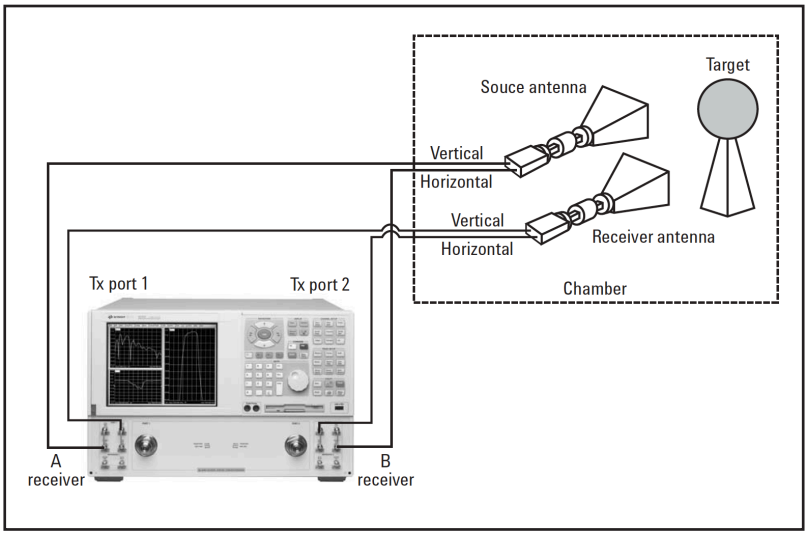

Figure 2. Typical RCS measurement configuration for measuring the full polarization matrix, using the PNA receiver.

To illustrate the reduction in measurement times that can be achieved with a PNA receiver, it is useful to look at an example measurement. Consider an RCS imaging application in which full polarization matrix data is to be acquired. For this example, lets assume a down range resolution of 801 data points, and a cross range acquisition of ±30 degrees and an angular increment of either 0.1 or 0.25 degrees. Table 3 summarizes the total data acquisition times for the PNA receiver, with various down-range and cross-range resolutions [5]. For comparison purposes, the measurement times for the 85301C and 85301B measurement systems are also included. As can be seen from the comparison table, the PNA receiver is three times faster than the 85301B/C systems. Thus the PNA receiver will provide significantly faster data acquisitions, and improved productivity on an RCS test range.

Table 3. RCS full polarization matrix measurement times

Down range resolution (points)	801	801	1601	1601	4000	16001
Cross range resolution (degrees)	0.25	0.1	0.25	0.1	0.1	0.1
Number of down range scan	241	601	241	601	601	601
Total number of meas. points:	772,164	1,925,604	1,543,364	3,848,804	9,616,000	38,466,404
PNA total measurement time: (-98 dBm sensitivity)	3.2 min	8.1 min.	5.3 min.	13.1 min.	27.7 min.	96 min.
85301C total meas. time: (-98 dBm sensitivity)	9.5 min.	24 min.	not available	not available	not available	not available
PNA total measurement time: (-113 dBm sensitivity)	21 min.	54.1 min.	42.2 min	105.3 min.	4.3 hrs.	16.9 hrs
85301B total meas. time: (-113 dBm sensitivity)	72 min.	3.0 hr.	not available	not available	not available	not available

There are several additional features of the PNA that are particularly useful in RCS configurations. Up to 16,001 data points are available per measurement trace, which provides extremely long alias-free down-range resolution for RCS measurements; the 8530A has a maximum of 801 data points. A removable hard drive meets the security requirements often associated with RCS measurements. Having the source and receiver integrated into the same instrument, and having several different PNAs with different frequency ranges to select from has proven to be very cost effective in RCS applications.

Typical Performance Comparisons

The performance of the new PNA receivers when utilized in an antenna/RCS measurement system is summarized in tables 1-3. As can be seen from the measurement time comparison tables, the PNA provides significantly faster data acquisition times, resulting in shorter total test times for characterizing an antenna or RCS target. Reducing the time it takes to characterize a company's product provides a significant economic benefit to the company as well as the antenna/RCS range operators.

Other Test Range Configurations

There are many different variations on the basic antenna/RCS ranges, and not all configurations and variations can be discussed in this limited space. The examples provide typical configurations and measurement times to guide the antenna test professional in designing their own measurement systems. The actual measurement times and performance will vary with different test scenarios and different antenna or RCS configurations.

Summary

A new network analyzer that can be utilized in antenna/RCS measurement configurations was presented. New and unique features that are particularly well suited to antenna/RCS applications were presented and compared to the 8530A microwave receiver. Typical configuration diagrams for the PNA in a near-field and RCS configuration were illustrated. Typical example test scenarios were presented for near-field, far-field, and RCS measurements. Actual measurement times for the PNA were measured using the example test scenarios, and then compared to the measurement times of the 85301B/C systems to illustrate the productivity improvements available with the PNA receiver. The information presented in this paper can serve to guide antenna test professionals in designing their own measurement systems to meet their own unique requirements.

Conclusion

The conclusions are clear: newer measurement receivers provide faster measurement speeds, new capabilities, and enhanced features that will make an antenna or RCS range more productive. Reducing total measurement time pays large economic dividends to a company such as higher quality products, reduced development time, faster time-to-market, lower cost-of-test, and more competitive products that can improve the economic viability of your company.

References

[1] R. Balaberta, and Shatnu R. Mishra, *On the use of the HP 8510 Network Analyzer for Antenna Pattern Measurements*, 1986 AMTA proceedings.

[2] Dan Slater, and Greg Hindman, Nearfield Systems, Inc. “A Low-cost, Portable Near-field Antenna Measurement System,” 1989 AMTA proceedings.

[3] John Swanstrom and Robert Shoulders, *Pulsed Antenna Measurements with the Keysight 8530A Microwave Receiver*, 1994 AMTA proceedings.

[4] John Swanstrom, Jim Puri, Keith Anderson, and Bill Kwan, *Antenna and RCS Measurement Configurations Using Keysight’s New PNA Network Analyzers*, 2003 AMTA proceedings, page 573

[5] Loren Betts, *New Network Analyzer Methodologies in Antenna/RCS Measurements*, 2004 AMTA proceedings.

[6] *PNA Series RF and Microwave Network Analyzer*, (brochure), literature number 5968-8472EN, September 25, 2002

[7] Keysight *PNA Series Microwave Network Analyzers* Data Sheet, literature number 5988-7988EN, April 16, 2003

[8] *Triggering the PNA Series Network Analyzer for Antenna Measurements*, (Keysight white paper), literature number 5988-9518EN, May 28, 2003

[9] *Pulsed Measurement Using the Microwave PNA Series Network Analyzer*, (Keysight white paper), literature number 5988-9480EN, May 22, 2003

Evolving Since 1939

Our unique combination of hardware, software, services, and people can help you reach your next breakthrough. We are unlocking the future of technology.
From Hewlett-Packard to Agilent to Keysight.

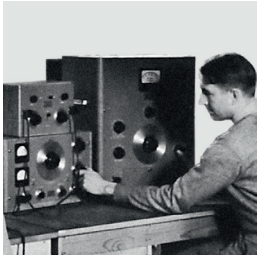

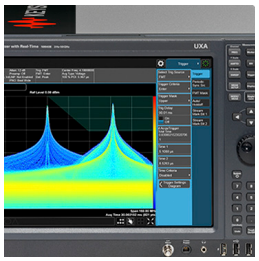

myKeysight

myKeysight
www.keysight.com/find/mykeysight
A personalized view into the information most relevant to you.

www.keysight.com/find/emt_product_registration
Register your products to get up-to-date product information and find warranty information.

KEYSIGHT SERVICES
Accelerate Technology Adoption.
Lower costs.

Keysight Services
www.keysight.com/find/service
Keysight Services can help from acquisition to renewal across your instrument's lifecycle. Our comprehensive service offerings—one-stop calibration, repair, asset management, technology refresh, consulting, training and more—helps you improve product quality and lower costs.

CALIBRATION UP TO 10 YEARS WARRANTY
ASSURANCE PLANS

Keysight Assurance Plans
www.keysight.com/find/AssurancePlans
Up to ten years of protection and no budgetary surprises to ensure your instruments are operating to specification, so you can rely on accurate measurements.

Keysight Channel Partners
www.keysight.com/find/channelpartners
Get the best of both worlds: Keysight's measurement expertise and product breadth, combined with channel partner convenience.

www.keysight.com/find/pna
www.keysight.com/find/antenna

For more information on Keysight Technologies' products, applications or services, please contact your local Keysight office. The complete list is available at:
www.keysight.com/find/contactus

Americas	
Canada	(877) 894 4414
Brazil	55 11 3351 7010
Mexico	001 800 254 2440
United States	(800) 829 4444
Asia Pacific	
Australia	1 800 629 485
China	800 810 0189
Hong Kong	800 938 693
India	1 800 11 2626
Japan	0120 (421) 345
Korea	080 769 0800
Malaysia	1 800 888 848
Singapore	1 800 375 8100
Taiwan	0800 047 866
Other AP Countries	(65) 6375 8100
Europe & Middle East	
Austria	0800 001122
Belgium	0800 58580
Finland	0800 523252
France	0805 980333
Germany	0800 6270999
Ireland	1800 832700
Israel	1 809 343051
Italy	800 599100
Luxembourg	+32 800 58580
Netherlands	0800 0233200
Russia	8800 5009286
Spain	800 000154
Sweden	0200 882255
Switzerland	0800 805353
	Opt. 1 (DE)
	Opt. 2 (FR)
	Opt. 3 (IT)
United Kingdom	0800 0260637

For other unlisted countries:
www.keysight.com/find/contactus
(BP-9-7-17)

DEKRA Certified
ISO9001 Quality Management System

www.keysight.com/go/quality
Keysight Technologies, Inc.
DEKRA Certified ISO 9001:2015
Quality Management System

KEYSIGHT TECHNOLOGIES

This information is subject to change without notice.
© Keysight Technologies, 2017
Published in USA, December 1, 2017
5989-1949EN
www.keysight.com