Keysight Technologies

Mobile Device Run-down Testing Provides Realistic Assessment of Battery Performance

Application Brief

KEYSIGHT TECHNOLOGIES

Conducting a run-down test on a mobile device with its battery yields unique and useful insights for optimizing battery run time.

It is important to test the mobile device and battery individually when determining and optimizing run-time. However, a battery is not an ideal voltage source; its characteristics interact with and influence the host mobile devices' power consumption. Because of this interdependency, a number of unique and useful insights are obtained only when you perform a run-down test on a device with its battery, together as a system. These insights include:

- Obtaining the most realistic performance and run-time to serve as a baseline to compare and correlate against results you get from other methods
- Assess the battery capacity and energy achieved in actual use against the battery manufacturer's ratings to determine reasons for differences, if any
- Verify low-battery shutdown and full-battery charge termination (when batteries are rechargeable) thresholds on the mobile device to ascertain if it is making full use of the battery

As you can see, performing a run-down test with the device and its battery is key and complementary to a suite of methodologies for optimizing battery run time.

Conducting a battery run-down test requires accurate high-speed voltage and current logging with minimal influence from instrumentation on the measurement.

Figure 1 depicts a conventional set up for conducting a battery run-down test. In particular, high-speed digitization of the current is essential, as it provides many detailed insights. A 50-KSa/sec sampling rate is a good starting point when you log pulsed battery current drain signals of wireless devices. It is also a recommended rate for some mobile phone test standards.

Accurate measurement over an extended dynamic range is also essential for obtaining meaningful results due to the high peak, low duty cycle and low average values typical of pulsed current drain of wireless mobile devices. Depending on the operating mode of the device under test, the crest factor can be several hundredfold. The span in current is even greater if there are multiple operating modes of different power levels during the test. High crest factors consume the instrumentation's dynamic measurement range, limiting achievable accuracy. This is even more problematic when you consider the current shunt peak voltage drop should be below 50 mV so it does not unduly influence test results. It is imperative the instrumentation has sufficient gain, dynamic range and accuracy for good results. Conventional instrumentation usually falls short of meeting these requirements.

A second independent measurement channel is also needed to log the battery voltage simultaneously with the current. Together they provide the key insights necessary from a battery run-down test for analyzing and optimizing the run time of the device.

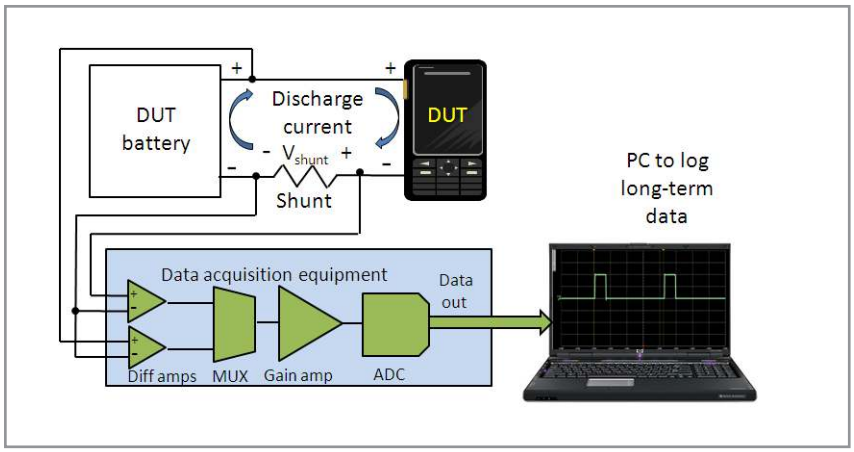

Figure 1. Conventional battery run-down test setup

Battery run-down test example:

We conducted a battery run-down test on a GPRS smart phone using the Keysight Technologies, Inc. N6781A 2-quadrant source/measure unit to log the battery run-down voltage and current, as depicted in Figure 2. The N6781A has a number of unique features and advantages that provide improved accuracy and greater insights specifically when you conduct a battery run-down test:

- It offers an independent DVM input for logging the battery voltage.
- It is a true "zero burden" shunt, eliminating the voltage drop problem of conventional shunts.
- Seamless measurement ranging provides accurate current measurement of signals spanning from ηA to A in one continuous logging measurement, eliminating the dynamic range and accuracy limitations of conventional, fixed-range instrumentation.
- A logging resolution of up to 20.48 µsec (and underlying sampling resolution of 5.12 µsec) assures accurate measurement for most any pulsed signals you are likely to encounter.

The battery run-down test results, captured and displayed using the Keysight 14585A control and analysis software, is shown in Figure 3.

Placing measurment markers at the start and shut-down points yields:

- Average and peak currents of 0.233 A and 1.29 A respectively
- Charge and energy delivered by the battery were 843 mAh and 3.19 Wh respectively
- The mobile phone ran for 3 h 38 min before shutting down at 3.44 V low battery

Based on these results findings include:

- The delivered charge was 16% less than the capacity stated for the battery
- The battery discharge termination voltage was higher than the target value

As you can see by this example, performing battery run-down test yields unique and useful insights that complement the other test methods in optimizing battery run time on mobile wireless devices.

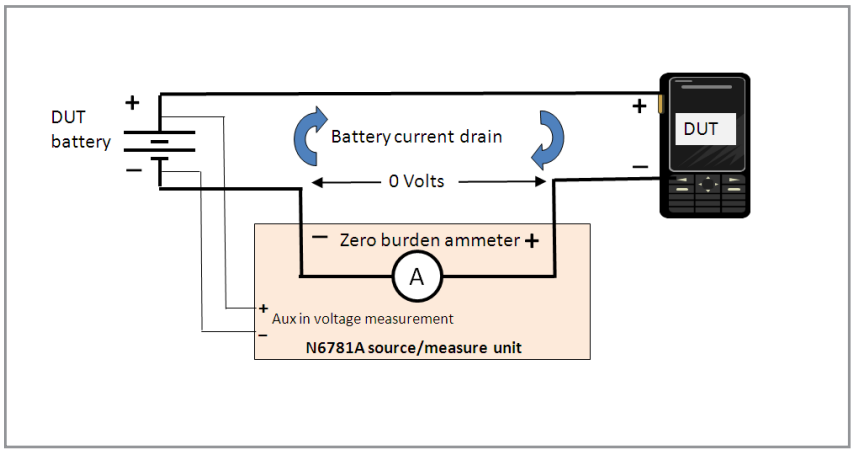

Figure 2. Battery run-down test setup using the Keysight N6781A source/measure unit

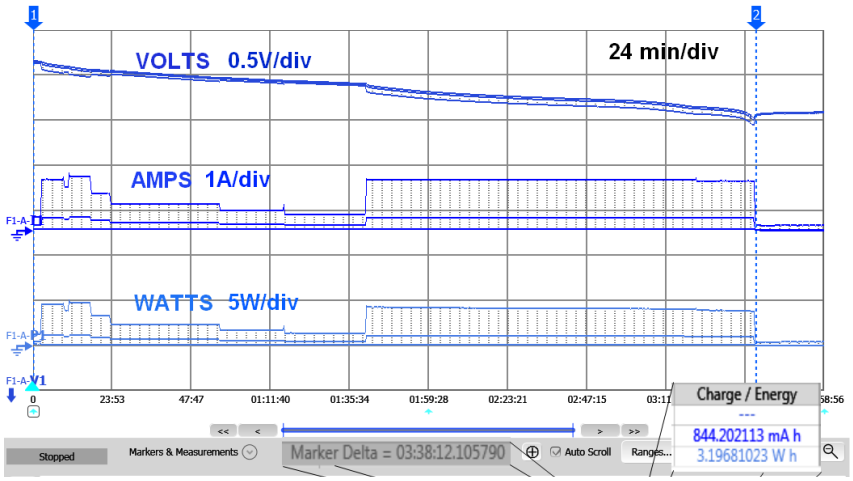

Figure 3. Battery run-down test results

myKeysight

www.keysight.com/find/mykeysight
A personalized view into the information most relevant to you.

Three-Year Warranty
www.keysight.com/find/ThreeYearWarranty
Keysight's commitment to superior product quality and lower total cost of ownership. The only test and measurement company with three-year warranty standard on all instruments, worldwide.

Keysight Assurance Plans
www.keysight.com/find/AssurancePlans
Up to five years of protection and no budgetary surprises to ensure your instruments are operating to specification so you can rely on accurate measurements.

www.keysight.com/quality
Keysight Technologies, Inc.
DEKRA Certified ISO 9001:2008
Quality Management System

Keysight Channel Partners
www.keysight.com/find/channelpartners
Get the best of both worlds: Keysight's measurement expertise and product breadth, combined with channel partner convenience.

For more information on Keysight Technologies' products, applications or services, please contact your local Keysight office. The complete list is available at:
www.keysight.com/find/contactus

Americas	
Canada	(877) 894 4414
Brazil	55 11 3351 7010
Mexico	001 800 254 2440
United States	(800) 829 4444
Asia Pacific	
Australia	1 800 629 485
China	800 810 0189
Hong Kong	800 938 693
India	1 800 112 929
Japan	0120 (421) 345
Korea	080 769 0800
Malaysia	1 800 888 848
Singapore	1 800 375 8100
Taiwan	0800 047 866
Other AP Countries	(65) 6375 8100
Europe & Middle East	
Austria	0800 001122
Belgium	0800 58580
Finland	0800 523252
France	0805 980333
Germany	0800 6270999
Ireland	1800 832700
Israel	1 809 343051
Italy	800 599100
Luxembourg	+32 800 58580
Netherlands	0800 0233200
Russia	8800 5009286
Spain	0800 000154
Sweden	0200 882255
Switzerland	0800 805353
	Opt. 1 (DE)
	Opt. 2 (FR)
	Opt. 3 (IT)
United Kingdom	0800 0260637

For other unlisted countries:
www.keysight.com/find/contactus
(BP-07-10-14)

This information is subject to change without notice.
© Keysight Technologies, 2012 - 2014
Published in USA, August 2, 2014
5990-9266EN
www.keysight.com