Keysight Technologies

M9451A-DPD PXIe Measurement Accelerator

with Digital Pre-Distortion & Envelope Tracking Gateware

Data Sheet

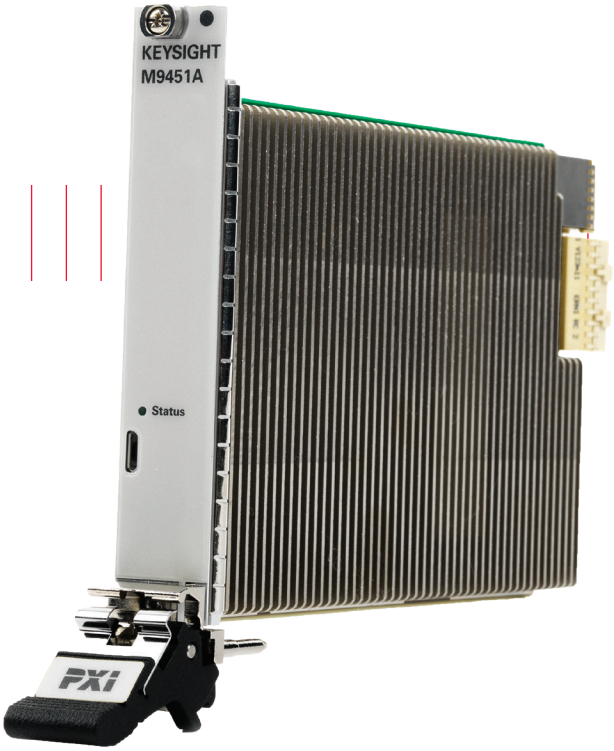

KEYSIGHT TECHNOLOGIES

Unlocking Measurement Insights

Overview

The M9451A-DPD shows what is possible when you combine state-of-the art FPGAs with Keysight Technologies, Inc.'s trusted measurement expertise and PXIe high speed data handling. The trusted DPD and ET measurement algorithms were built after years of close cooperation with leading wireless manufacturing customers.

As part of Keysight's RF PA/FEM Characterization and Test, Reference Solution, this combination provides unprecedented performance for demanding envelope tracking and digital pre-distortion measurements required for testing modern power amplifiers (PAs) and front-end modules (FEMs). Hardware acceleration provides better than 10x speed improvement over Keysight's previous host-based Reference Solution, with closed/open loop digital pre-distortion (DPD) and envelope tracking (ET) measurements taking just tens of milliseconds and overall measurement times less than 100 msec.

Applications

- Power amplifier testing
- Front-end module testing
- Envelope tracking
- Digital pre-distortion

Key Features

The M9451A-DPD significantly speeds up DPD/ET test applications that use the N7614B Signal Studio Power Amplifier Test software. To simplify porting, the M9451A-DPD's application programming interface (API) is very similar to the N7614B API. Key features include:

Digital Pre-Distortion
- Open or closed loop
- PA optimization techniques: Look up table (LUT)
- Fast peer-to-peer (P2P) data transfer to/from PXI signal generator and signal analyzer

Envelope Tracking
- Hardware accelerated envelope tracking waveform generation
- Fast data transfer to arbitrary waveform generator (AWG)

Block Diagram: Digital Pre-Distortion and Envelope Tracking

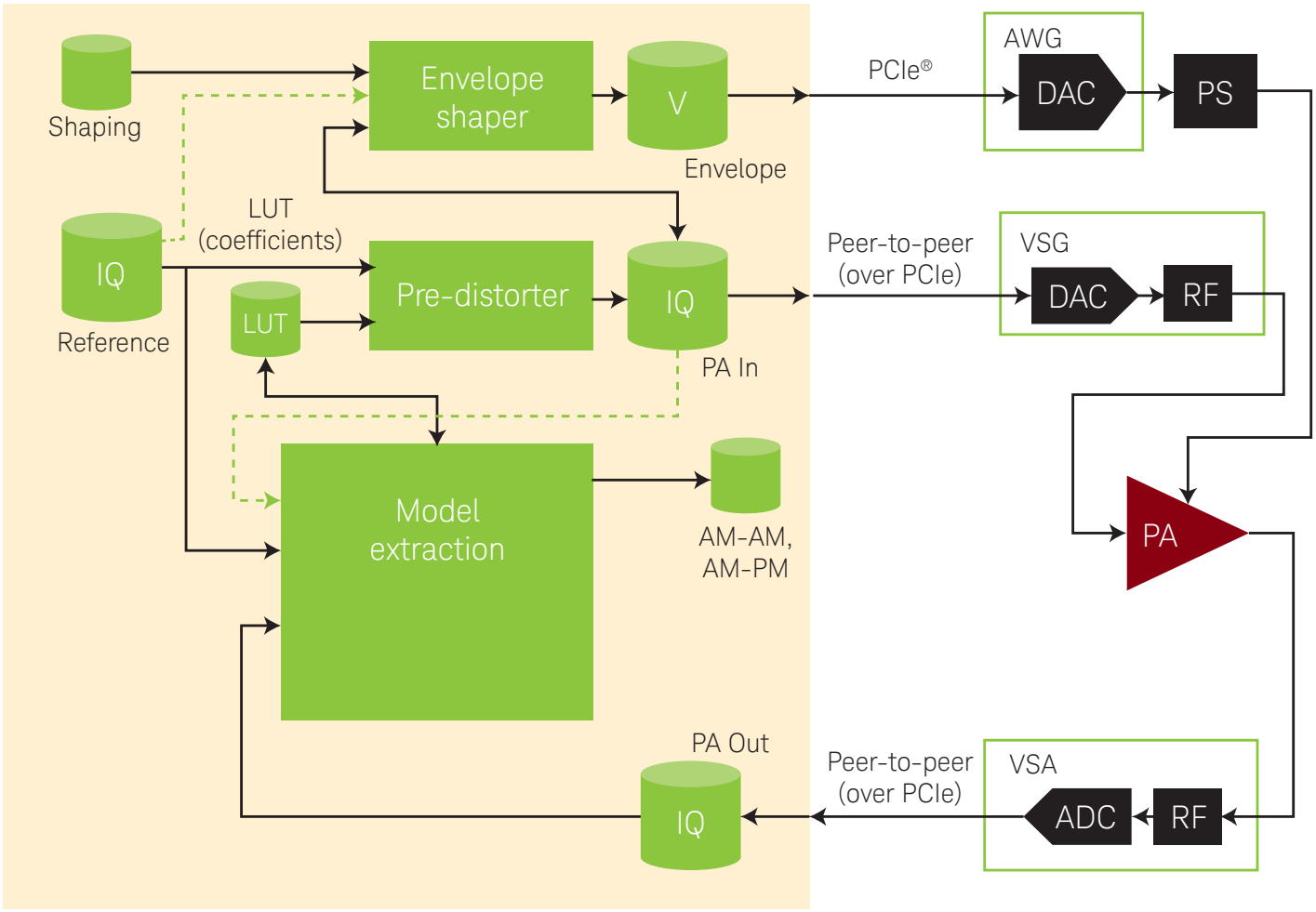

The highlighted box shows the key functions of the digital pre-distortion (DPD) and envelope tracking (ET) gateware in the M9451A PXIe measurement accelerator. Data cylinders are allocated blocks of IQ data in the M9451A memory. Rectangles represent algorithms implemented in the accelerator. Test software controls how data is processed by passing "data handles" associated with each data cylinder to the API method associated with each algorithm rectangle. Peer-to-peer (P2P) PCI Express® technology is used to achieve fast data transfers between the M9451A memory and the M9381A PXIe vector signal generator (VSG) hardware.

The ideal reference waveform, without pre-distortion, is first loaded into the M9381A PXIe VSG ARB memory and then transferred to the M9451A using P2P. After the model extraction algorithm computes a lookup table (LUT), or other coefficients, the pre-distorter creates a pre-distorted waveform in the PA In cylinder. P2P is used to transfer the pre-distorted waveform data to the VSG ARB memory. P2P PCI Express technology is also used to transfer measurement data from the M9391A or M9393A PXIe vector signal analyzer hardware to the M9451A hardware.

The M9451A-DPD PXIe measurement accelerator with DPD and ET gateware consists of two key parts:

1. M9451A PXIe measurement accelerator with an IVI driver and soft front panel (SFP). The IVI driver provides API access to accelerator configuration and initialization features. The SFP provides diagnostic information and tools to update the M9451A gateware.
2. Option DPD adds the ET and DPD acceleration software library and associated FPGA gateware that executes in the M9451A hardware. The library's API is modeled after the N7614B Signal Studio for Power Amplifier Test software.

To utilize the M9451A-DPD as part of your test software, example open source code is available as part of the Keysight RF PA/FEM Characterization and Test, Reference Solution. For more information about the Reference Solution, visit www.keysight.com/find/solution-padvt.

Technical Characteristics

Definitions for characteristics

Characteristics	Characteristics describe performance that the product is expected to meet before it leaves the factory, but that is not verified in the field and is not covered by the product warranty. A characteristic includes the same guardbands as a specification. Characteristics are often referred to as typical or nomal values. Data represented in this document are characteristics unless otherwise indicated.
Best practices	To ensure proper cooling, use Keysight slot blockers (Y1212A), filler panels (Y1213A), and the air inlet module kit (Y1214A) in the chassis when there are empty slots. Keysight chassis and filler panels optimize module temperature performance. At environmental temperatures > 40°C, chassis fans should be set to high.
Additional information	The specifications contained in this document are subject to change.

Technical Characteristics

General characteristics

Module characteristics	
Bus interface & compatibility	PXI Express peripheral module (x1, x4, x8 PCIe specification v 2.1)
FPGA	Altera Stratix V "A7" (5SGXMA7K3F40C2)
Memory	4GB DDR3 memory [2 independent DDR3 banks @ 1200 MT/s (600 MHz) each]
Front panel connectors	
Test port (factory use only)	Micro-B USB connector
Mechanical characteristics	
Dimensions H x W x D in mm	3U/1-slot PXIe standard 130.1 x 21.7 x 210 mm
Weight	440 g

DC power requirements		
DC supply	**Typical**	**Maximum**
DC supply current		
+ 3.3 V	1.0 A	2.0 A
+ 12 V	1.4 A	3.2 A
Power dissipation	20 W	45 W

Option DPD digital pre-distortion and envelope tracking characteristics

Digital pre-distortion	
Supported DPD models	Look-up table model (LUT)
Minimum waveform length	256 samples
Maximum waveform length	4,194,304 samples
Results available	AM-AM and AM-PM
DPD look-up table	
Table size	2 to 256. Default value set to 128.
Polynomial order of curve fit	3 to 12. Default value set to 5.
Results available	LUT, D-EVM
Envelope tracking	
Delay of envelope (in seconds)	Fractional. Range depends on sample rate and number of samples.
Oversampling ratio	Fractional. 1.0 to 1000.0. Default value set to 3.0.
Magnitude scale factor	0.0 to 10.0. Default value set to 1.0.
Envelope scale factor (V per DAC count)	1 µV to 1 V. Default value set to 10 V per 65536 DAC counts.
Envelope reference voltage	Range depends on scale factors

Technical Characteristics (continued)

Environmental characteristics and regulatory

Environmental characteristics	
Operating and storage conditions	
Temperature	0 to 55 °C (operating) -40 to +70 °C (storage)
Humidiity	Maximum 95% at 40°C (non-condensing)
Altitude	3,000 meters, de-rate max temperature by 5 °C above 2,000 meters
Mechanical (type tested[1])	
Operating vibration	5-500 Hz: 0.21 g RMS, random 5-500 Hz: 0.5 g (0 to peak), swept sine
Survival random vibration	5-500 Hz: 2.10 g RMS, random
Transportation shock	125 G, 8.6 m/s, trapezoidal pulse
End use handling shock	1.6 m/s, <3 msec duration, half-sine pulse

Regulatory	
Safety	
IEC/EN 61010-1	
EMC	
IEC/EN 61326-1	Basis EM Environments, Table 1
IEC/EN 61000-4-2 ESD	4 kV CD, 8 kV AD
IEC/EN 61000-4-3 RI	3 V/m: 80-1000 MHz 3 V/m: 1.4-2 GHz 1 V/m: 2-2.7 GHz
IEC/EN 61000-4-4 EFT/B	0.5 kV signal/control lines 1 kV AC mains
IEC/EN 61000-4-5 Surge	0.5 kV L-L 1 kV L-PE
IEC/EN 61000-4-6 CI	3V, 0.15 – 80 MHz
IEC/EN 61000-4-8 Mag	3 A/m (tested to 30 A/m)
IEC/EN 61000-4-11 Dips/Inter.	½ cycle and 1 cycle @ 0% 5 seconds @ 70%
CISPR 11+A1, EN 55011+A1	Group 1 Class A

1. Type tested in a Keysight M9018A PXIe 18-slot chassis.

Software

Instrument connection software			
	Keysight IO library	The IO library suite offers a single entry point for connection to the most common instruments including AXIe, PXI, GPIB, USB, Ethernet/ LAN, RS-232, and VXI test instruments from Keysight and other vendors. It automatically discovers interfaces, chassis, and instruments. The graphical user interface allows you to search for, verify, and update IVI instrument and soft front panel drivers for modular and traditional instruments. The IO suite safely installs in side-by-side mode with NI I/O software.	Free software download at www.keysight.com/find/iosuite
Module setup and usage			
	Keysight soft front panel	The PXI module includes a soft front panel (SFP), a software based graphical user interface (GUI) which enables the instrument's capabilities from your PC.	Available online

Programming		
Driver	**Development environments**	
IVI-COM IVI-C MATLAB	Visual Studio (VB.NET, C#, C/C++) LabVIEW, LabWindows/CVI, MATLAB	Available online
Programming assitance		
 Command Expert	Assists in finding the right instrument commands and setting correct parameters. A simple interface includes documentation, examples, syntax checking, command execution, and debug tools to build sequences for integration in Excel, MATLAB, Visual Studio, LabVIEW, VEE, and SystemVue.	Free software download at www.keysight.com/find/commandexpert
Programming examples	Each module includes programming examples for Visual Studio.net, LabVIEW, MATLAB, LabWindows, and Keysight VEE Pro.	Available online

Support

Support		
Core exchange program	Keysight's replacement core exchange program allows fast and easy module repairs. A replacement core assembly is a fully functioning pre-calibrated module replacement that is updated with the defective module serial number, allowing the replacement module to retain the original serial number.	For qualified self maintainers in US only
Self-test utility	A self-test utility runs a set of internal tests which verifies the health of the modules and reports their status.	Included in base configuration

Configuration and ordering information

Supported hardware

This associated hardware is currently supported by the M9451A-DPD as part of Keysight's RF PA/FEM Characterization and Test Reference Solution:

- M9381A PXIe vector signal generator
- M9391A PXIe vector signal analyzer
- M9393A PXIe performance vector signal analyzer
- Signadyne SD AOU-H3353 200MHz, 2-ch, arbitrary waveform generator

Ordering information

These items must be ordered together:

- M9451A PXIe measurement accelerator
- M9451A-DPD Digital pre-distortion & envelope tracking gateware

Additional ordering information is available in the Keysight RF PA/FEM Characterization and Test, Reference Solution Configuration Guide, literature number **5992-0072EN**.

Related products

- Keysight RF PA/FEM Characterization and Test, Reference Solution:
  www.keysight.com/find/solution-padvt
- M9381A PXIe vector signal generator
  www.keysight.com/find/M9381A
- M9391A PXIe vector signal analyzer
  www.keysight.com/find/M9391A
- M9393A PXIe performance vector signal analyzer
  www.keysight.com/find/M9393A
- M9195A PXIe digital stimulus/response
  www.keysight.com/find/M9195A
- N7614B Signal Studio PA test software
  www.keysight.com/find/N7614B

PCI-SIG®, PCIe® and the PCI Express® are US registered trademarks and/or service marks of PCI-SIG.

www.keysight.com/find/M9451A
www.keysight.com/find/solution-padvt

KEYSIGHT TECHNOLOGIES

This information is subject to change without notice.
© Keysight Technologies, 2015 - 2017
Published in USA, December 5, 2017
5992-0773EN
www.keysight.com