ENA and ENA-X Vector Network Analyzer

E5080B ENA: 9 kHz to 53 GHz, 2 / 4-port

E5081A ENA-X: 10 MHz to 44 GHz, 2 / 4-port

Introduction

This configuration guide describes standard configurations, options, accessories, upgrade kits and compatible peripherals for the Keysight E5080B ENA and E5081A ENA-X Vector Network Analyzers. This guide should be used with ENA and ENA-X data sheets for a complete description of the analyzers.





KEYSIGHT

Table of Contents

ENA and ENA-X Configurations 3

E5081A ENA-X with Configurable Test Set 10

Block Diagrams 12

Measurement Application Software 18

Keysight Software Licensing Options Provide Flexibility and Support 38

Upgrade Your System 39

E5092A Configurable Multiport Test Set 39

Measurement Accessories 41

E5081A, E5080B and E5071C Comparison 66

Literature Information 69

Web Resources 69

ENA and ENA-X Configurations

This section describes standard configurations, options, accessories, upgrade kits and compatible peripherals for the Keysight E5080B ENA and E5081A ENA-X Vector Network Analyzers (VNA). The instruments are equipped with an Online Help system available within the instrument in English only. All ENA and ENA-X documentation is available on the product page: www.keysight.com/find/ena.

Test Set Options

Choose one of the frequency and test set options for the analyzer. Option 2xx indicates two test ports and option 4xx indicates four test ports. To add options to a product, order the corresponding item number (E5080B- or E5081A-xxx).

E5080B ENA

Option Number	Description	Test Port Connectors
2-Port Options		
E5080B-240	2-port test set, 9 kHz to 4.5 GHz	Type-N (f)
E5080B-260	2-port test set, 9 kHz to 6.5 GHz	Type-N (f)
E5080B-290	2-port test set, 9 kHz to 9 GHz	Type-N (f)
E5080B-2D0	2-port test set, 9 kHz to 14 GHz	Type-N (f), 3.5 mm (m)
E5080B-2H0	2-port test set, 9 kHz to 18 GHz	Type-N (f), 3.5 mm (m)
E5080B-2K0	2-port test set, 9 kHz to 20 GHz	3.5 mm (m)
E5080B-2L0	2-port test set, 100 kHz to 26.5 GHz	3.5 mm (m)
E5080B-2M0	2-port test set, 100 kHz to 32 GHz	2.4 mm (m)
E5080B-2N0	2-port test set, 100 kHz to 44 GHz	2.4 mm (m)
E5080B-2P0	2-port test set, 100 kHz to 53 GHz [1]	1.85 mm (m)
4-Port Options		
E5080B-440	4-port test set, 9 kHz to 4.5 GHz	Type-N (f)
E5080B-460	4-port test set, 9 kHz to 6.5 GHz	Type-N (f)
E5080B-490	4-port test set, 9 kHz to 9 GHz	Type-N (f)
E5080B-4D0	4-port test set, 9 kHz to 14 GHz	Type-N (f), 3.5 mm (m)
E5080B-4H0	4-port test set, 9 kHz to 18 GHz	Type-N (f), 3.5 mm (m)
E5080B-4K0	4-port test set, 9 kHz to 20 GHz	3.5 mm (m)
E5080B-4L0	4-port test set, 100 kHz to 26.5 GHz	3.5 mm (m)
E5080B-4M0	4-port test set, 100 kHz to 32 GHz	2.4 mm (m)
E5080B-4N0	4-port test set, 100 kHz to 44 GHz	2.4 mm (m)
E5080B-4P0	4-port test set, 100 kHz to 53 GHz [1]	1.85 mm (m)
4-Port Options with Internal Second Source		
E5080B-442	4-port test set, 9 kHz to 4.5 GHz with second source	Type-N (f)
E5080B-462	4-port test set, 9 kHz to 6.5 GHz with second source	Type-N (f)
E5080B-492	4-port test set, 9 kHz to 9 GHz with second source	Type-N (f)
E5080B-4D2	4-port test set, 9 kHz to 14 GHz with second source	Type-N (f), 3.5 mm (m)
E5080B-4H2	4-port test set, 9 kHz to 18 GHz with second source	Type-N (f), 3.5 mm (m)

Option Number	Description	Test Port Connectors
E5080B-4K2	4-port test set, 9 kHz to 20 GHz with second source	3.5 mm (m)
E5080B-4L2	4-port test set, 100 kHz to 26.5 GHz with second source	3.5 mm (m)
E5080B-4M2	4-port test set, 100 kHz to 32 GHz with second source	2.4 mm (m)
E5080B-4N2	4-port test set, 100 kHz to 44 GHz with second source	2.4 mm (m)
E5080B-4P2	4-port test set, 100 kHz to 53 GHz with second source [1]	1.85 mm (m)

1. Frequency is settable up to 54 GHz.

E5081A ENA-X

Option Number	Description	Test Port Connectors
2-Port Options		
E5081A-2K5	2-port, 10 MHz to 20 GHz	3.5 mm (m)
E5081A-2K6	2-port, 10 MHz to 20 GHz, upconverter for modulation distortion	3.5 mm (m)
E5081A-2N5	2-port, 10 MHz to 44 GHz	2.4 mm (m)
E5081A-2N6	2-port, 10 MHz to 44 GHz, upconverter for modulation distortion	2.4 mm (m)
E5081A-2N7 [1]	2-port, 10 MHz to 44 GHz, upconverter for modulation distortion, limited	2.4 mm (m)
4-Port Options		
E5081A-4K5	4-port, 10 MHz to 20 GHz	3.5 mm (m)
E5081A-4K6	4-port, 10 MHz to 20 GHz, upconverter for modulation distortion	3.5 mm (m)
E5081A-4N5	4-port, 10 MHz to 44 GHz	2.4 mm (m)
E5081A-4N6	4-port, 10 MHz to 44 GHz, upconverter for modulation distortion	2.4 mm (m)
E5081A-4N7 [1]	4-port, 10 MHz to 44 GHz, upconverter for modulation distortion, limited	2.4 mm (m)

1. Option 2N7/4N7 is a bandwidth limited version of Option 2N6/4N6. See Table 55 of the E5081A Data Sheet for more details.

Spectrum Analysis Hardware Options (E5080B Only)

Choose one of spectrum analysis options for the E5080B (Option 09x). The frequency of Option 09x must match with the operation frequency of the test set. S96090B application software is required for spectrum analysis using the Option 09x.

Spectrum analysis on E5081A is enabled with S960904B or S960907B software. There is no required spectrum analysis hardware option on the E5081A.

Option Number	Description	Additional Information
E5080B-090	Spectrum analysis hardware, 9 kHz to 4.5 GHz	
E5080B-091	Spectrum analysis hardware, 9 kHz to 6.5 GHz	
E5080B-092	Spectrum analysis hardware, 9 kHz to 9 GHz	
E5080B-093	Spectrum analysis hardware, 9 kHz to 14 GHz	
E5080B-094 [1]	Spectrum analysis hardware, 9 kHz to 20 GHz	
E5080B-095	Spectrum analysis hardware, 100 kHz to 26.5 GHz	
E5080B-096	Spectrum analysis hardware, 100 kHz to 32 GHz	
E5080B-097	Spectrum analysis hardware, 100 kHz to 44 GHz	
E5080B-098	Spectrum analysis hardware, 100 kHz to 53 GHz	

1. Order Option 094 for 18 GHz options (opt.2H0/4H0/4H2). The maximum frequency of spectrum analysis is limited at 18 GHz.

Internal Bias Tees Options (E5080B Only)

Broadband internal bias tees are integrated for each test port. Order E5080B Option 120 for 2-port options and order Option 140 for 4-port options [1]. DC power can be provided via BNC female connectors on the rear panel of the analyzer for the operation of active components under test such as Tower Mounted Amplifiers (TMAs). Internal bias tees up to 20 GHz are available on the E5080B.

Internal bias tees options are not available with E5081A ENA-X.

Option Number	Description	Additional Information
E5080B-120	Add internal bias tees for 2-port E5080B	Available with 4.5/6.5/9/14/20 GHz options only
E5080B-140	Add internal bias tees for 4-port E5080B	Available with 4.5/6.5/9/14/20 GHz options only

1. Internal bias tees options cannot be combined with 14 or 18 GHz options with Type-N connectors.

Hardware Options

Description	For E5080B ENA	For E5081A ENA-X	Additional Information
Add pulse modulator to internal 1st source	E5080B-021 [1]	N/A	Adds the internal pulse modulators to the E5080B's first source.
Add pulse modulator to internal 2nd source	E5080B-022 [1]	N/A	Adds the internal pulse modulators to the E5080B's second source.
Vector signal analysis hardware	E5080B-190 [2]	N/A	Adds vector signal analysis capability to the E5080B's spectrum analysis hardware (option 09x). The maximum bandwidth is 29 MHz.
Equipped with Type-N connectors	E5080B-1NC	N/A	Adds Type-N connectors for 14 and 18 GHz options (opt.2D0/4D0/4D2/2H0/4H0/4H2). Cannot be combined with internal bias tees options (opt.120 or 140).
Add noise receiver to port 1, 50 MHz to 20 GHz	N/A	E5081A-0K1 [3]	Adds the low-noise receiver to E5081A's port 1 to provide wideband noise figure and noise-power measurements up to 20 GHz.
Add noise receiver to port 2, 50 MHz to 20 GHz	N/A	E5081A-0K2 [3]	Adds the low-noise receiver to E5081A's port 2 to provide wideband noise figure and noise-power measurements up to 20 GHz.
Add noise receiver to port 1, 50 MHz to 44 GHz	N/A	E5081A-0N1 [3]	Adds the low-noise receiver to E5081A's port 1 to provide wideband noise figure and noise-power measurements up to 44 GHz.
Add noise receiver to port 2, 50 MHz to 44 GHz	N/A	E5081A-0N2 [3]	Adds the low-noise receiver to E5081A's port 2 to provide wideband noise figure and noise-power measurements up to 44 GHz.
Add high stability time base	E5080B-1E5	E5081A-1E5	Improves specification of frequency accuracy within ± 0.45 ppm.
Add GPIB interface	E5080B-172	E5081A-172	
Add analog input and output	E5080B-175	E5081A-175	Provides two DC sources and four input ports for DC measurements.

1. S96024B or S96025B application software is required for pulsed-RF measurements.
2. E5080B's spectrum analysis hardware (opt.09x), S96090B application software and PathWave Vector Signal Analysis (89600 VSA) software are required for vector signal analysis using the E5080B option 190.
3. S96029B application software is needed for all noise figure measurements.

Pulse modulation hardware (E5080B only. With Option 021, 022)

Option 021 adds internal pulse modulators to the E5080B's first source. On the single source options, the pulse modulation works for the port 1 and 2 (on Opt.2x0, 2-port options) and all four ports (on Opt.4x0, 4-port options). On the second source options with Opt.4x2, Option 021 pulse modulation works only for port 1 and 2.

Option 022 adds internal pulse modulators to the E5080B's second source. This option is available only on the second source options (Opt. 4x2) and opt.022 pulse modulation works for port 3 and 4.

S96024B or S96025B software is required to enable the E5080B's internal pulse modulators. Built-in pulse modulators with the E5081A ENA-X are enabled with any of S960240B, S960241B, S960250B or S96251B software and the hardware option is not required.

The internal pulse modulators can be controlled via the Application I/O D-sub connector on the rear panel of the analyzer using an external pulse generator, or by using one of the internal pulse generators.

Vector signal analysis hardware (E5080B only. With Option 190)

Option 190 adds vector signal analysis capability to spectrum analysis hardware (Option 09x) with the E5080B. The maximum bandwidth is 29 MHz.

S96090B spectrum analysis software for E5080B ENA and PathWave Vector Signal Analysis (89600 VSA) software are required to enable vector signal analysis using the E5080B Option 09x and 190.

Vector signal analysis functionality with the E5081A ENA-X is enabled with S960904B or S960907B software and 89600 VSA software. Hardware options are not required.

Noise receiver hardware (E5081A only. With Option 0K1, 0K2, 0N1, 0N2)

This option adds a low-noise receiver to the ENA-X to provide wideband noise figure and noise-power measurements on a broad range of devices. The noise receiver has three gain settings and contains the necessary filters to eliminate out-of-band noise conversion. For E5081A 20 GHz options, Option 0K1 adds the noise receiver to the analyzer's port 1, and Option 0K2 adds the noise receiver to the port 2. For E5081A 44 GHz options, Option 0N1 adds the noise receiver to the port 1 and Option 0N2 adds the noise receiver to the port 2.

The noise receiver start frequency is 10 MHz and it works up to the stop frequency of the instrument. The noise receiver is intended for use with S96029B software. Without the software, the high gain setting for noise figure measurements cannot be utilized.

Analog input and output (E5080B and E5081A. With Option 175)

Option 175 adds analog input and output ports with BNC female connectors on the rear panel of the analyzer to enable DC measurements with the E5080B. Two integrated variable DC sources provide ±10 VDC with maximum current of 200 mA. Synchronized DC voltage sweep is performed using the VNA's firmware.

For more comprehensive analysis, four analog inputs with BNC female connectors are provided to allow sensing of DC voltages from the DUT.

Device Test I/O (E5080B and E5081A)

Device test I/O with a 25-pin D-sub connector on the rear panel of the analyzer allows users to control the Device Under Test (DUT) directly with serial or parallel digital interface. Signals from the I/O are applied to select operation modes of the RF front-end module which integrates power amplifiers, switches, low noise amplifiers, duplexers, or filters in a single component.

The device test I/O has two independent 8-bit digital I/Os (DIOs). Each 8-bit DIO can provide either 8-bit parallel signals or 4-channels of RFFE-like interface. Output DC voltage or clock rate (25 MHz maximum) are selectable according to the specification of DUTs.

Quick and easy setup of DUT control signals can be done with the VNA's firmware, and the operation of the device test I/O is synchronized with the measurement sweep of the analyzer.

Application I/O (E5080B and E5081A)

Application I/O with a 15-pin D-sub connector on the rear panel of the analyzer provides required signals for synchronized measurements using the analyzer and external peripherals such as pulse generators, pulse modulators, RF switches for NF measurements, or signal generators.

Y1721A Option 001 I/O adapter for application I/O of the analyzer is recommended if using an external pulse generator. N1966A pulse I/O adapter included in Y1721A Option 001 enables coaxial connections between the Application I/O D-sub connector on the rear panel of the analyzer and the coaxial inputs and outputs of external pulse generators and external pulse modulators. Coaxial connectors are SMB male. A connector saver (P/N: Z2342-37605) and hex standoff (P/N: 0380-5932) in Y1721A Option 001 are required for the connection of the analyzer and N1966A.

Calibration Options

Description	For E5080B ENA	For E5081A ENA-X	Additional Information
ISO 17025 compliant calibration	E5080B-1A7	E5081A-1A7	Provides a complete set of measurements which tests the unit to manufacturer's published specifications. Includes calibration label, ISO 17025 calibration certificate and data report, and measurement uncertainties and guardbands on all customer specifications. Conforms to ISO 17025 and ISO 9001.
ANSI Z540 compliant calibration	E5080B-A6J	N/A	Provides a complete set of measurements which tests the unit to manufacturer's published specifications. Includes pre- and post-adjustment data and measurement uncertainty information compliant with the ANSI/NCSL Z540 standard.

Accessories

Description	For E5080B ENA	For E5081A ENA-X	Additional Information
Rack mount kit for installation without handles	E5080B-1CM	E5081A-1CM	Adds a rackmount flange kit (5063-1543) and a rail kit (E3663AC) for use without handles.
Rack mount kit for installation with handles	E5080B-1CP	E5081A-1CP	Adds handles, a rack mount flange kit (5063-1555), and a rail kit (E3663AC) for use with handles.
Add keyboard	E5080B-181	E5081A-181	
Add mouse	E5080B-182	E5081A-182	
Solid State Drive (SSD) spare kit	E5080BU-180, E5080BU-181 [1], or E5080BU-182 [2]	E5081AU-180, E5081AU-181 [3], or E5081AU-182 [4]	Visit web sites (E5080B upgrade kits / E5081A upgrade kits) for more details.

1. Spare SSD with Windows 10 OS. For the E5080B with serial-number prefixes of MY592/SG592 or lower, order the E5080BU-180. For the E5080B with series-number prefixes of MY593/SG593 or greater, order the E5080BU-181.
2. Spare SSD with Windows 11 OS. It is not compatible with E5080B with serial-number prefixes of MY591-MY595 or SG591-SG595.
3. Spare SSD with Windows 10 OS. For the E5081A with serial-number prefixes of MY632/SG632 or lower, order the E5081AU-180. For the E5081A with series-number prefixes of MY633/SG633, order the E5081AU-181.
4. Spare SSD with Windows 11 OS. It is not compatible with E5081A with serial-number prefixes of MY631-MY633 or SG631-SG633.

E5081A ENA-X with Configurable Test Set

The E5081A ENA-X comes with a configurable test set on ports 1 and 2 to allow for flexible setup of test systems by integrating with external components [1] such as booster amplifiers, attenuators, or directional couplers. This functionality combined with modulated signal analysis allows you to characterize highly integrated components with a single connection.

High-Power S-Parameter Tests

One example using the E5081A with configurable test set is S-parameter measurements of high-power devices. When you need an input level higher than the analyzer's source can provide, booster amplifiers are necessary to increase the power level incident upon the DUT. However, the reference signal is measured before the booster amplifier with a standard configuration of a 2-port VNA, and temperature drift or high reverse isolation of a booster amplifier will prevent accurate reflection measurements of the DUT's input.

A typical configuration for high-power measurements with the 2-port E5081A is shown. Reflected and transmitted signals of the DUT are detected with all the logical receivers, and the VNA firmware provides measured high-power S-parameters.

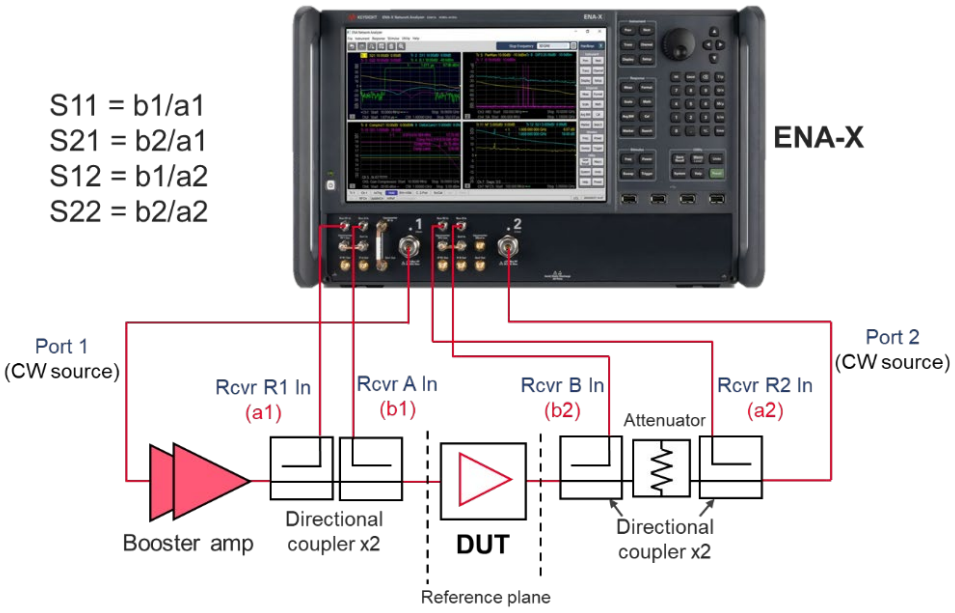

External components should be selected based on their high-power limits or frequency range specifications. Be sure that these components can handle the output power level of the booster amplifier.

1. External components are not included with the E5081A. Must be purchased separately.

Modulation Distortion Analysis with Vector Signal Source

An E5081A with option 2K6/2N6/2N7/4K6/4N6/4N7 and an external modulated source (e.g., Keysight MXG) can be combined to support both vector network analysis and modulation distortion analysis with a single connection. RF modulation signals under 6 GHz from the external source are added to the “Upconverter BB In” (Upconverter baseband input) port on the E5081A’s front panel, and then upconverted with a built-in upconverter to output mmwave modulated signals at port 1 or port 2 up to 44 GHz. The S960704B (up to 20 GHz) or S960707B (up to 44 GHz) software enable users to measure the nonlinear behavior of power amplifiers or frequency converting devices under the high-frequency, wideband modulated stimulus conditions.

The VNA-based vector correction extends the reference planes of the signal source to the DUT’s planes. As a result, you can achieve excellent signal fidelity resulting in accurate and repeatable modulated distortion measurements. The system delivers faster, more accurate, and repeatable EVM and ACPR measurements compared to conventional signal analyzers.

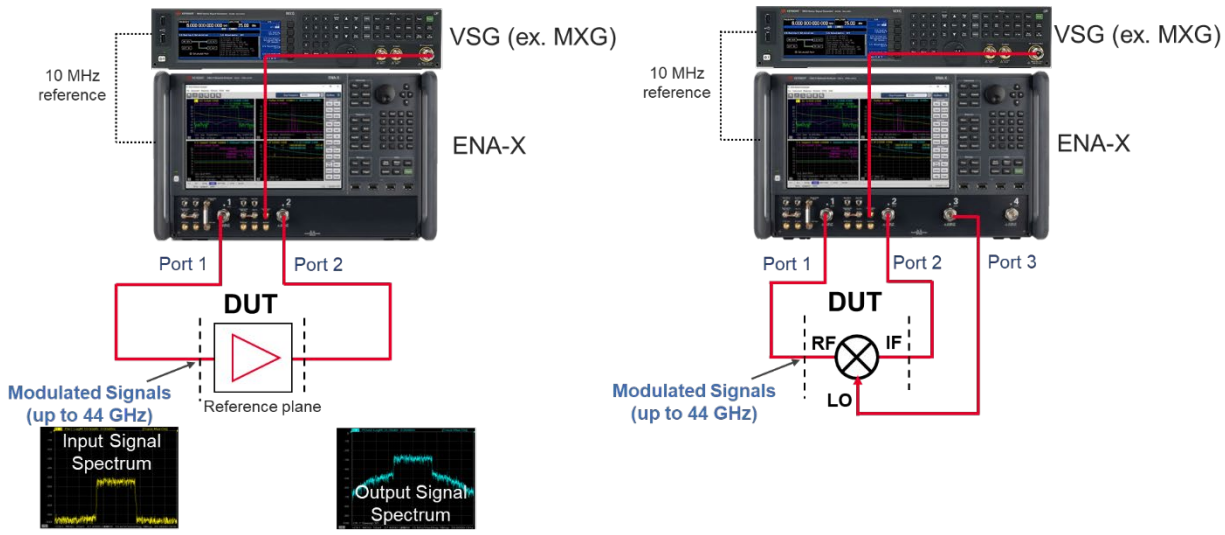

Modulation distortion analysis setup for amplifiers (left), and frequency converters (right)

Block Diagrams

E5080B Option 240/260/290/2D0/2K0 (2-port base options)

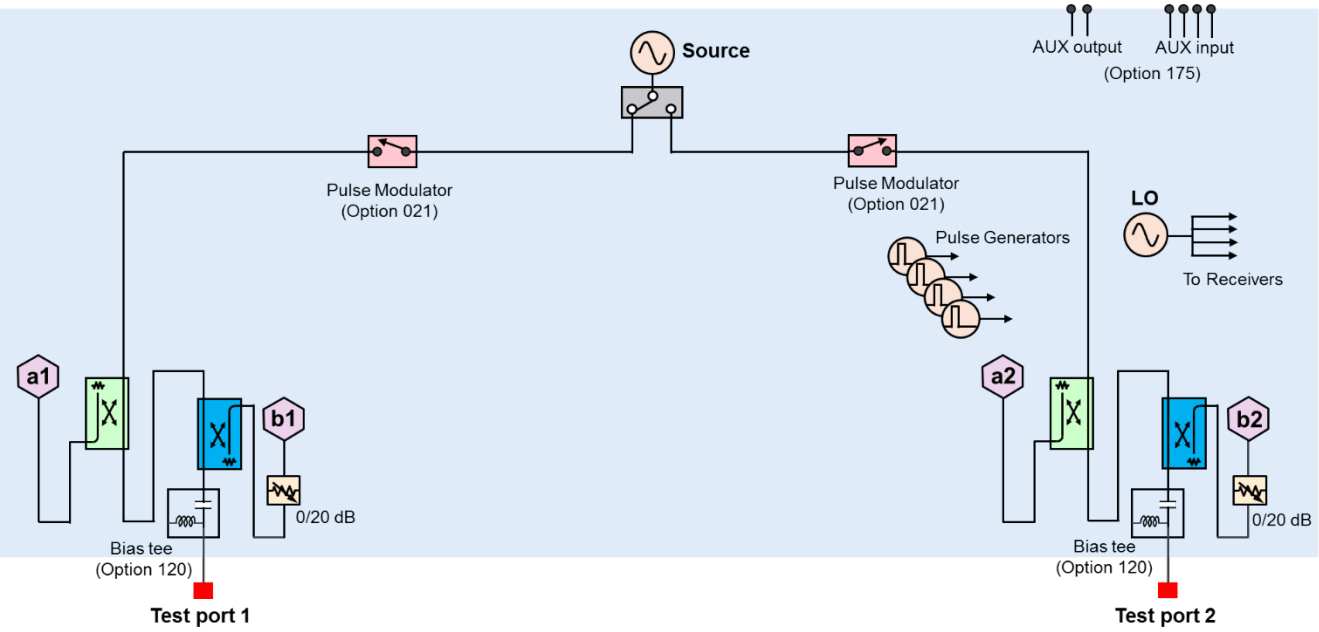

E5080B Option 2L0/2M0/2N0/2P0 (2-port base options)

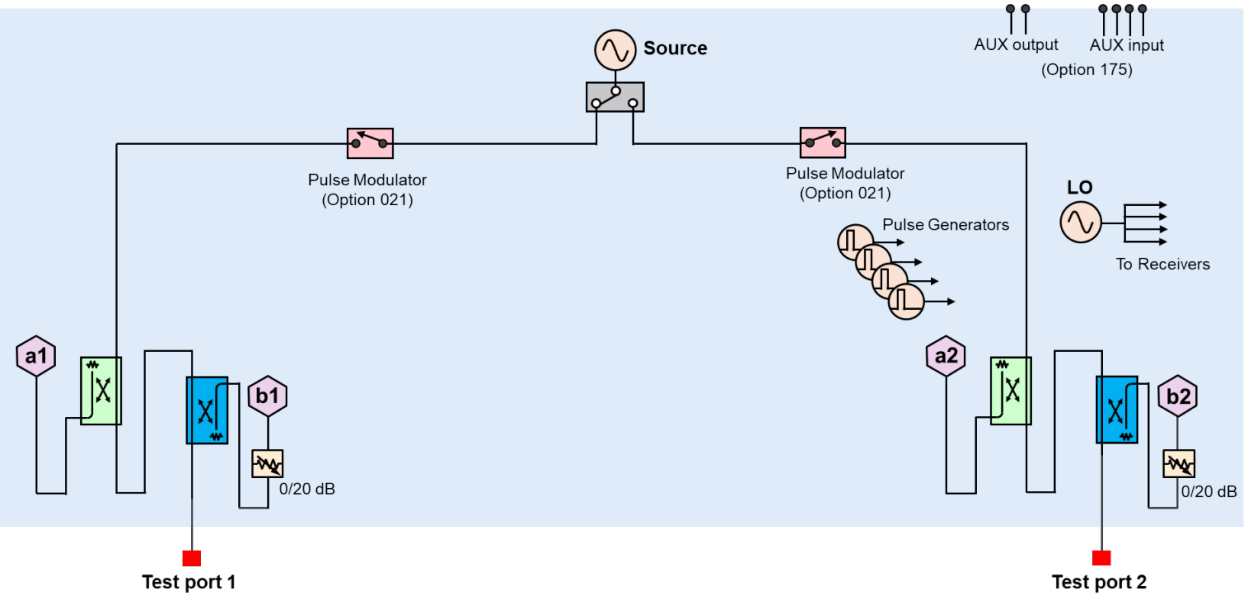

E5080B Option 440/460/490/4D0/4K0 (4-port base options)

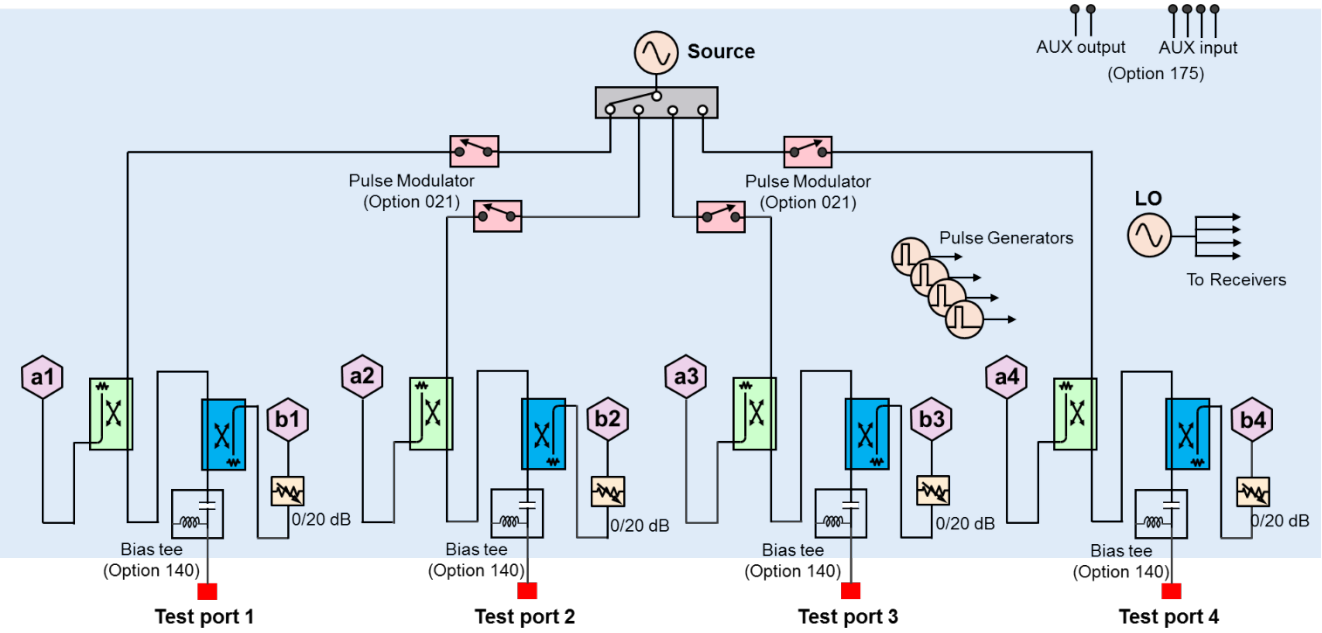

E5080B Option 4L0/4M0/4N0/4P0 (4-port base options)

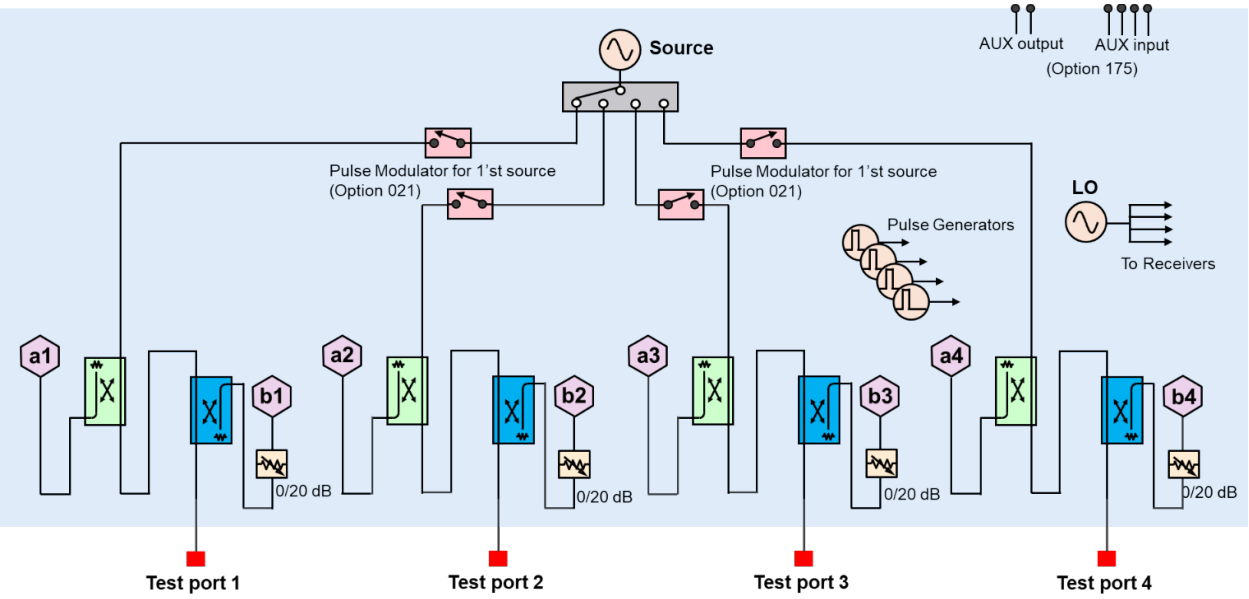

E5080B Option 442/462/492/4D2/4K2 (4-port second source option)

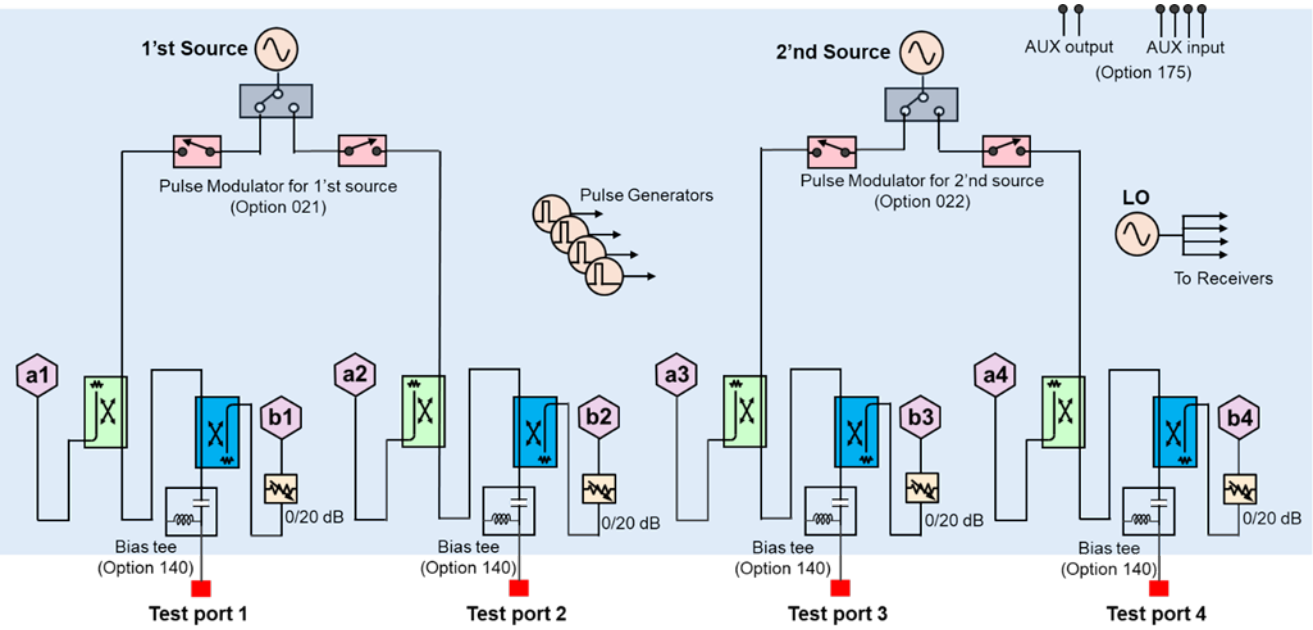

E5080B Option 4L2/4M2/4N2/4P2 (4-port second source options)

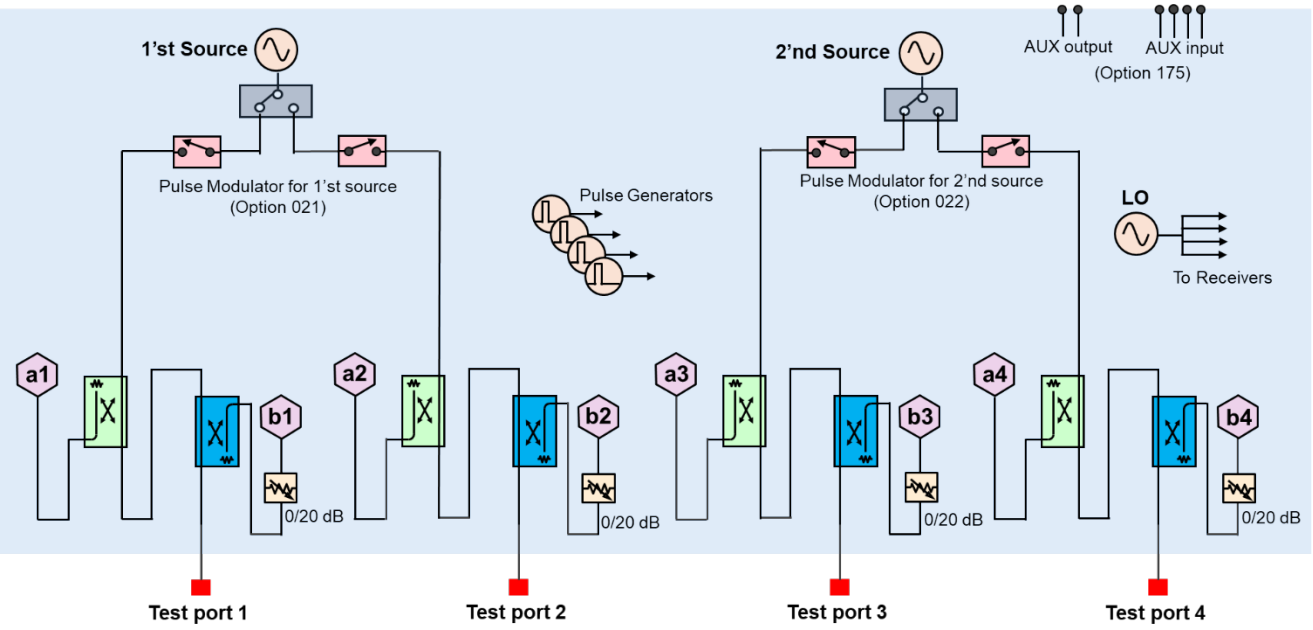

E5081A Option 2K5 (2-port, 20 GHz base)

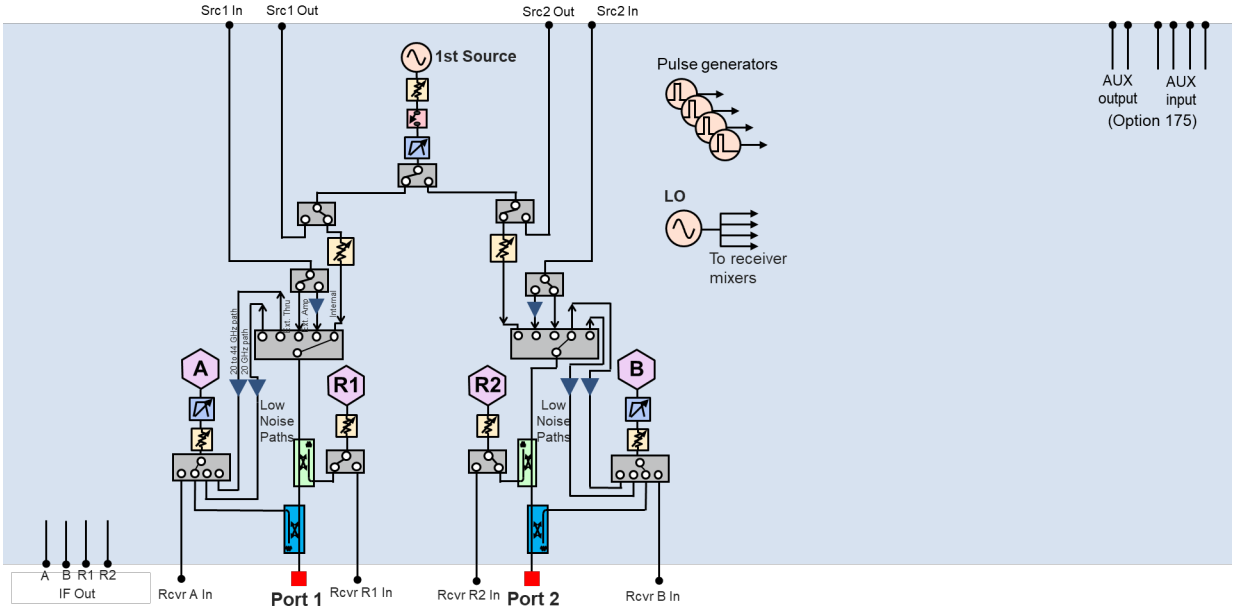

E5081A Option 4K5 (4-port, 20 GHz base)

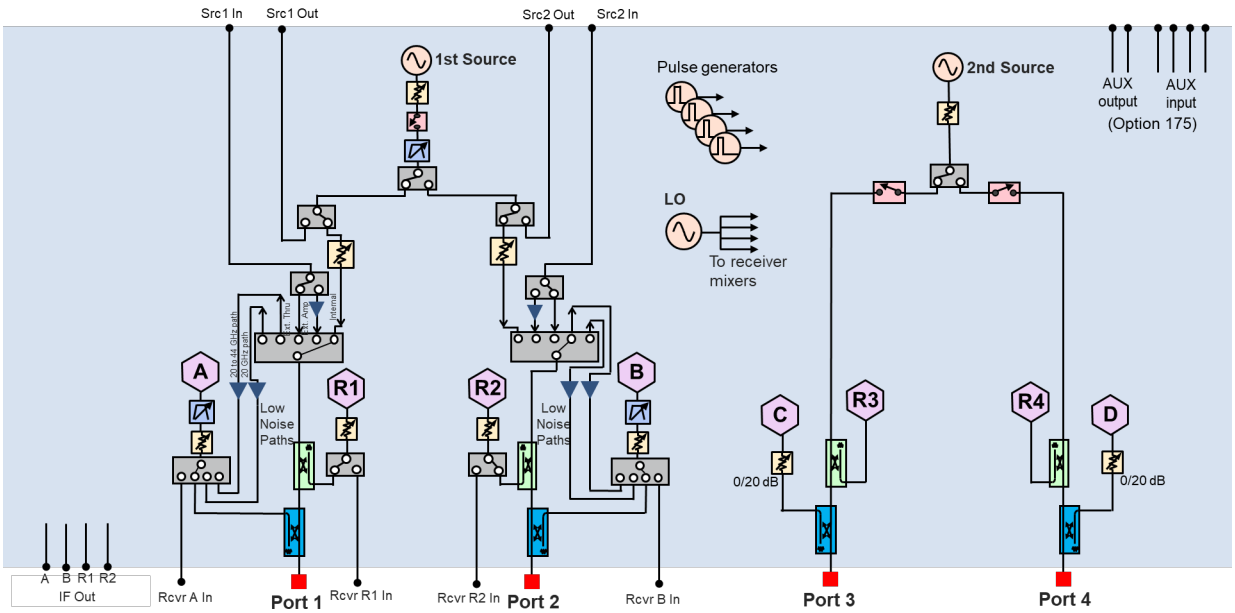

E5081A Option 2N5 (2-port, 44 GHz base)

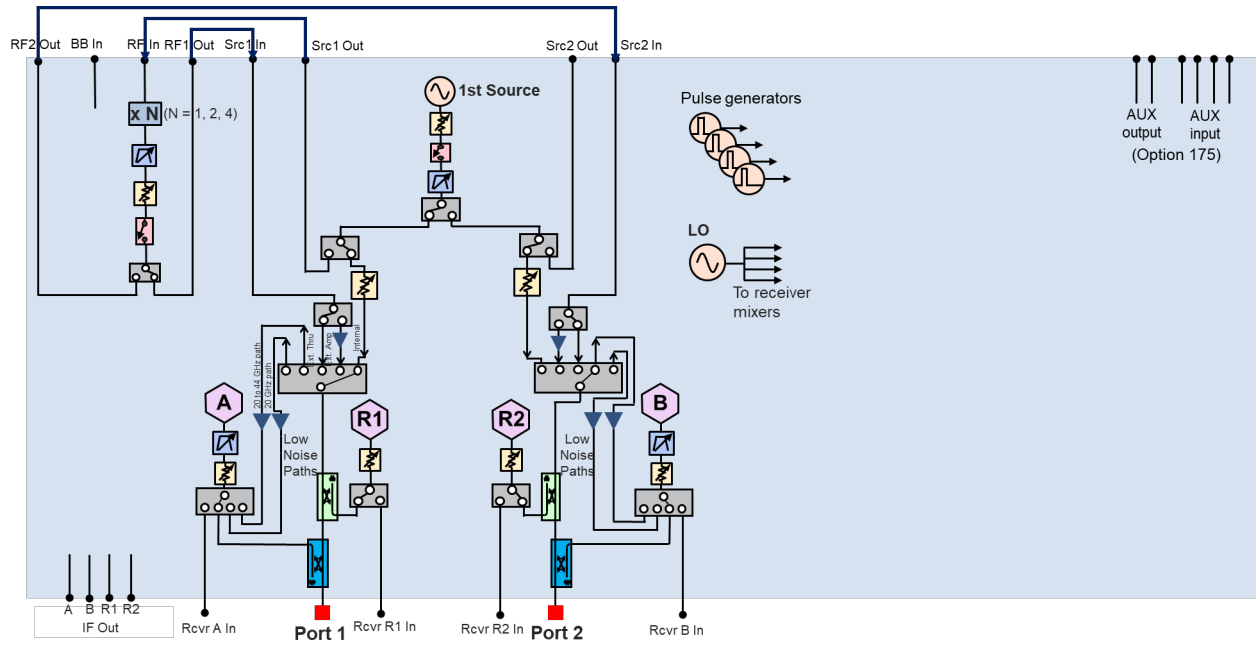

E5081A Option 4N5 (4-port, 44 GHz base)

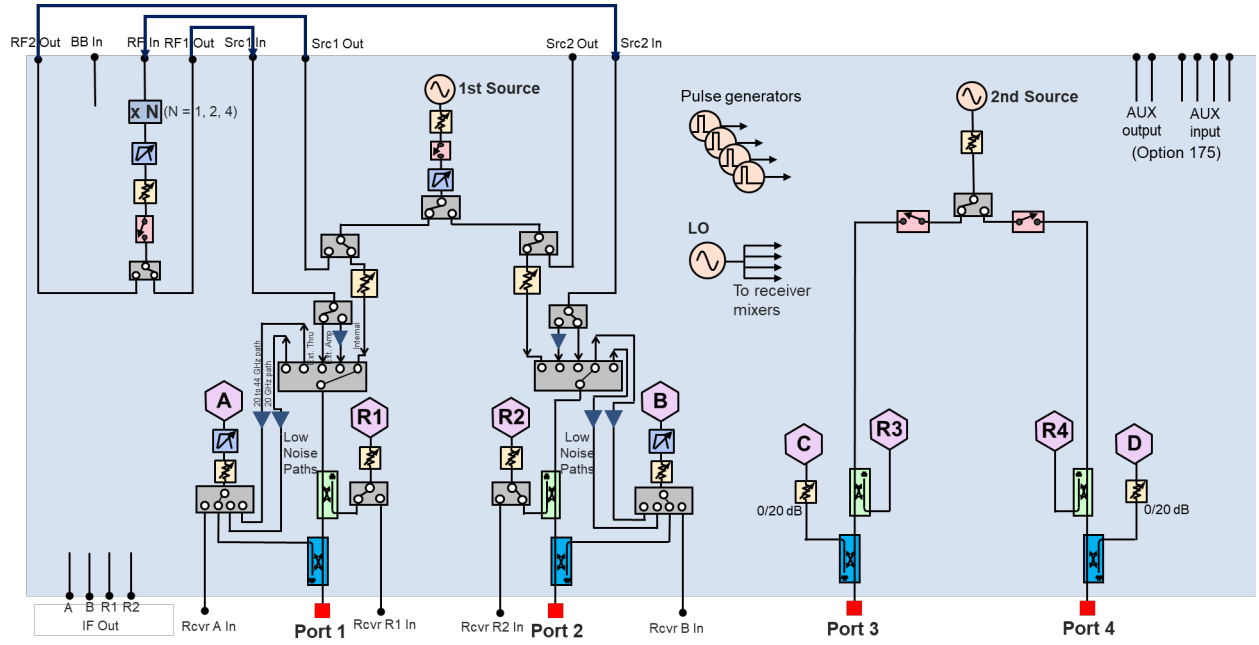

E5081A Option 2K6/2N6/2N7 (2-port, 20 or 44 GHz with upconverter)

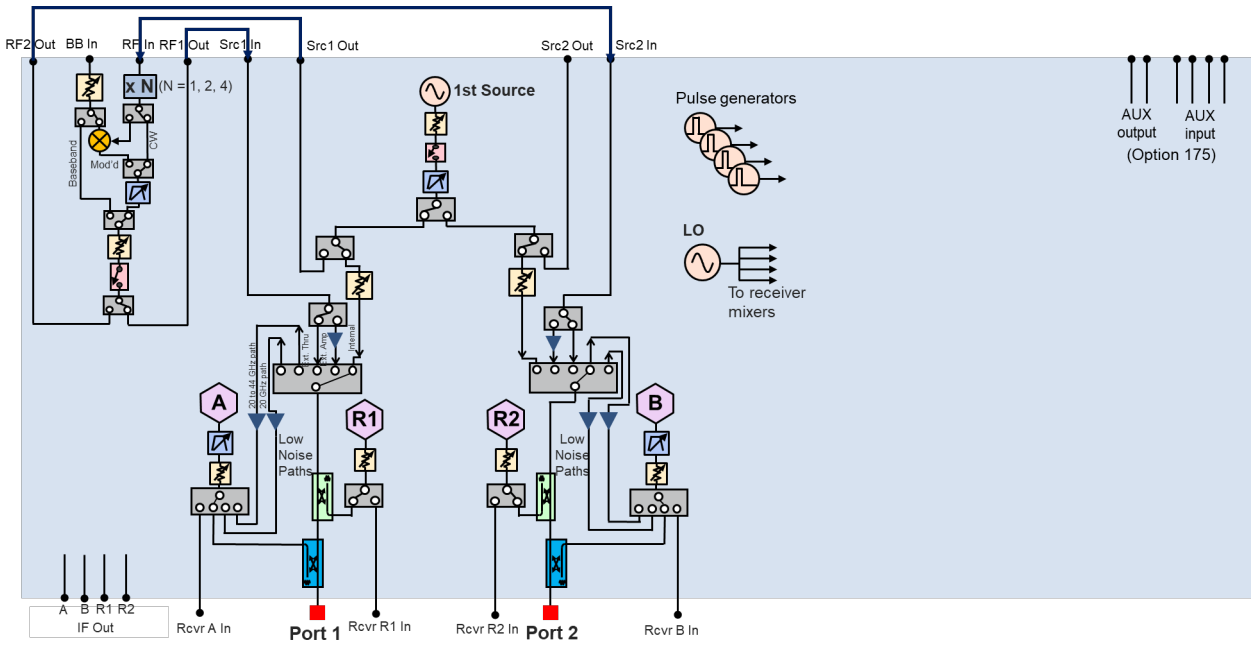

E5081A Option 4K6/4N6/4N7 (4-port, 20 or 44 GHz with upconverter)

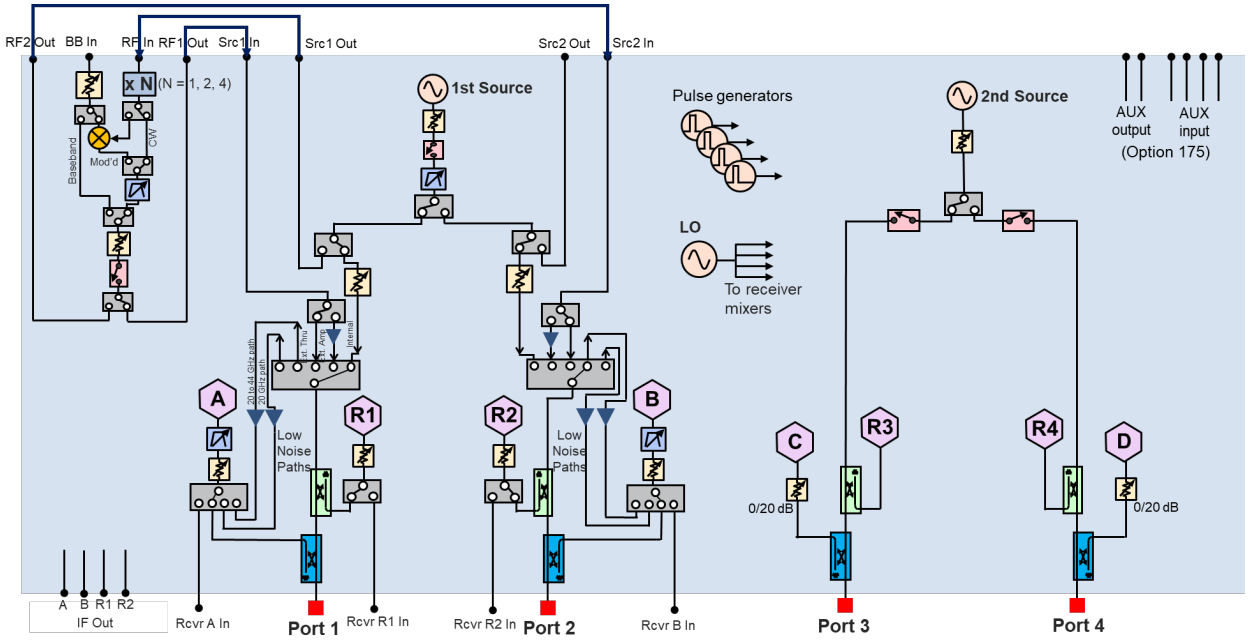

Measurement Application Software

Description [1]	For E5080B ENA	For E5081A ENA-X	Additional Information
Automatic fixture removal	S96007B	S96007B	
Time domain analysis	S96010B	S96010B	
Probe and fixture leakage calibration	S96008B	S96008B	
Enhanced time domain analysis with TDR	S96011B	S96011B	Includes all capabilities of S96010B.
Real-time S-parameter and power measurement uncertainty	S96015B	S96015B	Displays the measurement uncertainty dynamically (real-time) on the measurement trace.
Basic pulsed-RF measurements lite for E5080B	S96024B	N/A	Requires E5080B option 021/022. Subset of S96025B.
Basic pulsed-RF measurements for E5080B	S96025B	N/A	Requires E5080B option 021/022.
Basic pulsed-RF measurements lite for E5081A up to 20 GHz	N/A	S960240B	Subset of S960250B.
Basic pulsed-RF measurements lite for E5081A up to 44 GHz	N/A	S960241B	Subset of S960251B.
Basic pulsed-RF measurements for E5081A up to 20 GHz	N/A	S960250B	
Basic pulsed-RF measurements for E5081A up to 44 GHz	N/A	S960251B	
Add mechanical noise tuner control for noise figure/parameter measurements	N/A	S96027B	Provides ability to control Maury Microwave's LXI or Focus Microwaves' CCMT impedance tuners. Requires E5081A option 0K1/0K2/0N1/0N2 and application software S96029B.
Noise figure measurements with vector correction [2]	S96029B	S96029B	Standard receivers are used on E5080B. Option 0K1/0K2/0N1/0N2 are required to enable high gain setting on E5081A.
IQ data bandwidth up to 1.5 GHz	N/A	S96050B	Requires either S960704/707B or S960904/907B for E5081A. E5080B is not supported.
IQ data bandwidth up to 4 GHz	N/A	S96051B	Requires either S960704/707B or S960904/907B for E5081A. E5080B is not supported.
Impedance analysis	S96041B	N/A	Provides impedance analysis of small-sized Surface Mount Devices (SMD) up to 10 GHz. Requires 16198A option 010 test fixture [3] and 85052DH02 mechanical cal kit.

Description [1]	For E5080B ENA	For E5081A ENA-X	Additional Information
Modulation distortion up to 20 GHz [2]	N/A	S960704B	Requires a supported vector signal generator. Requires S96083B for frequency converter measurements.
Modulation distortion up to 44 GHz [2]	N/A	S960707B	Requires a supported vector signal generator. Requires S96083B for frequency converter measurements.
Scalar mixer/converter measurements [2]	S96082B	S96082B	Provides SMC measurement class.
Vector and scalar mixer/converter measurements [2]	S96083B	S96083B	Provides SMC + phase measurement class and vector mixer characterization.
Embedded-LO capability [2]	S96084B	S96084B	
Gain-compression measurements	S96086B	S96086B	
Intermodulation distortion measurements [2, 4]	S96087B	S96087B	4-port VNA with the internal second source (E5080B-4x2 or E5081A-4xx) is recommended.
Source phase control	S96088B	S96088B	Requires the internal second source (E5080B-4x2 or E5081A-4xx).
Differential and I/Q device measurements [2]	S96089B	S96089B	
Spectrum analysis for E5080B [2]	S96090B	N/A	Requires E5080B option 09x.
Spectrum analysis for E5081A up to 20 GHz [2]	N/A	S960904B	
Spectrum analysis for E5081A up to 44 GHz [2]	N/A	S960907B	
Active hot parameters, restricted to 50 GHz	S96111B	S96111B	Requires the internal second source (E5080B-4x2 or E5081A-4xx).
True-mode stimulus	S96460B	S96460B	Requires the internal second source (E5080B-4x2 or E5081A-4xx).
Multiport calibration assistant	S96552B	S96552B	Provides a tool to flexibly define cal sets of multiport measurements. Requires one ECal module.
Vector network analyzer (VNA) simulator – Standard	S94050B	S94050B	Runs on your PC and simulates standard S-parameter measurement class of Keysight's VNAs.
Vector network analyzer (VNA) simulator - Advanced	S94051B	S94051B	Runs on your PC and simulates VNA functions including advanced features of S96xxxB software [5].
Device measurement expert (DMX)	S94601B	S94601B	Assists the users in setting up measurements automatically with customizable templates.
Limit assistant	S94602B	S94602B	Allows to acquire the data from the VNA, and easily generate limit masks for production tests.

Description [1]	For E5080B ENA	For E5081A ENA-X	Additional Information
Automated measurement expert (AMX)	S94701A, S94702A, KS8400A	S94701A, S94702A, KS8400A	A smart software solution for automated multiport S-parameter measurements with the VNA and E5092A [6]. Order each software model and install in a PC or the analyzer.
DisplayPort DP cable compliance test software	S94DPPCB [7,8]	S94DPPCB	Performs automated compliance tests of DisplayPort cable assemblies using 4-port VNA.
USB Type-C interconnects compliance test software	S94USBCB [7,8]	N/A [9]	Performs automated compliance tests of USB Type-C interconnects (e.g., cable assemblies, connectors, or raw cables) using 4-port E5080B.
Automotive cable test software	AE6910L, AE2010L	N/A	Automotive Ethernet and SerDes cable, connector, and harness conformance. Automated VNA setup and compliance measurements with pass/fail reporting using 4-port E5080B.

1. The S96xxxB software has six license types, please refer to “Keysight Software Licensing Options Provide Flexibility and Support” for more detail.
2. Provides Frequency Offset Mode (FOM) to independently set the frequency of internal source(s) and receivers, and to configure external sources using External Device Configuration.
3. The 16198A option 010 is connected with the E5080B’s options up to 20 GHz with either Type-N or 3.5-mm connectors. It offers optional fixtures to mount 0402 mm (0402 mm / 01005 inch) and 0201 (0201 mm / 008005 inch) devices with option 200 and 100 respectively.
4. The most common method to use S96087B is to use a 4-port VNA with the internal dual source, with each built-in source generating one tone. An external combiner (for example, hybrid power dividers 87302C, 87303C, or 87304C) is required to combine the tones.
5. Features of S96007B and S96552B are not supported with the S94051B.
6. A 4-port ECal module (e.g., N4431D or N4433D) is recommended for multiport measurements.
7. Requires S96011B, KS8400B PathWave Test Automation, and KS8104B HTML5 Result Listener Plugin.
8. Supports L8990M-0LZ 20-port switch matrix to configure a multiport test system which eliminates the need for reconnections of test cables with DUT.
9. E5081A ENA-X is not recommended for USB Type-C low-speed signal test which requires measurements from 300 kHz.

Automatic Fixture Removal (S96007B)

Many devices do not have coaxial connectors and are put in fixtures in order to measure them in a coaxial environment. Accurately removing the effects of the fixture is required to get a good measurement of the Device Under Test (DUT). This application adds a powerful application wizard to guide you through characterizing a fixture and removing it from the measurement. Devices can be single-ended or differential. Files can be saved in a variety of formats for later use in ENA, PNA, PXI VNA, Streamline Series VNA, ADS, and PLTS.

Probe and Fixture Leakage Calibration (S95008B)

The software provides a process designed to address and correct crosstalk and leakage errors within the measurement system. As measurement systems operate at high frequencies, the potential for crosstalk increases, impacting the accuracy of measurements. With on-wafer measurement setups, probes and components are placed very close to each other, resulting in crosstalk through physical coupling.

Additionally, modern DUTs often have more than two ports, leading to more complex crosstalk scenarios within the measurement setup.

Addressing these challenges requires advanced calibration techniques and models that can accurately account for and mitigate crosstalk, ensuring reliable and precise measurement results. The application maintains the integrity of high-frequency testing and supports the development of next-generation technologies.

Time Domain Analysis (S96010B)

This application enables the analyzer to view reflection and transmission responses in time or distance. Use time domain to tune filters, gate out the response of fixtures and cables, characterize the impedance of transmission lines and more.

Enhanced Time Domain Analysis with TDR (S96011B)

This application enables the analyzer to perform enhanced time domain analysis for high-speed data applications. All functionalities of the S96010B are included (TDR/TDT mode). In addition, the S96011B enables more detailed measurements and evaluations, such as eye-diagram/mask modes, without adding PLTS software. Jitters and/or emphasis/equalization capabilities enables simulation of real-world signals and environment. S96011B covers up to 53 GHz bandwidth with 8.42 ps rise time. Full calibration is available and the automatic deskew ensures easy removal of fixture and probe effects. To get the best accuracy, mechanical calibration kits or ECal with DC option (e.g., N443xD or N469xD with Option 0DC) are recommended.

Real Time S-Parameter and Power Measurement Uncertainty (S96015B)

This application provides uncertainties for both S-parameter and power measurements on the analyzer. The real-time display of the uncertainty associated with power and S-parameter traces increases the confidence in the reproducibility of measurements. This allows users to implement pass/fail tests easily because now the instrument quantifies the gray region that is in between a full pass or a full fail, apply more realistic limit lines which can increase the production yield and reduce the defect percentage on the finished products. This application easily establishes a metric to quantify the quality of the measurement process, so your company’s quality control procedures are simplified. It includes the uncertainty information for most Keysight calibration kits and provides national metrology institute traceability through Keysight’s calibration kits. This application also helps you to include uncertainty information for your product’s specifications and data sheets.

Basic Pulsed-RF Measurements Lite (S96024B for E5080B, S960240B/S960241B for E5081A)

This application enables internal pulse generators that can be used to control the analyzer's internal pulse modulators, and it provides an integrated pulse application that uses the wideband-detection method. For use with E5080B, the S96024B software requires hardware Option 021 or 022 pulse modulator hardware. There are two frequency choices intended for E5081B ENA-X: S960240B to 20 GHz options and S960241B to 44 GHz options.

The software provides an easy way to set up point-in-pulse measurements with pulse width as narrow as 50 µs, and pulse-profile measurements with 1 µs minimum timing resolution. Using the built-in pulse modulators, the analyzer is a complete pulsed-RF measurement solution, eliminating the need for external test sets and pulse generators. The software also controls external pulse generators and modulators and can synchronize to external master pulses. The application I/O connector on the rear panel of the analyzer is recommended if using external master pulses or external pulse modulators.

S96024B is a subset of S96025B and S96024xB is a subset of S96025xB, so they should not be installed together.

Basic Pulsed-RF Measurements (S96025B for E5080B, S960250B/S960251B for E5081A)

This application enables internal pulse generators that can be used to control the analyzer's internal pulse modulators, and it provides an integrated pulse application that uses the wideband-detection method. For use with E5080B, the software requires hardware Option 021 or 022 pulse modulator hardware. There are two frequency choices intended for E5081B ENA-X: S960250B to 20 GHz options and S960251B to 44 GHz options.

The software extends the capabilities of S96024B or S96024xB and provides an easy way to set up point-in-pulse measurements with pulse width as narrow as 200 ns, and pulse-profile measurements with 40 ns minimum timing resolution. Using the built-in pulse modulators with pulse width as narrow as 1 us, the analyzer is a complete pulsed-RF measurement solution, eliminating the need for external test sets and pulse generators. Examples of pulse modulation shapes with 1 µs and 100 µs pulse width using the internal pulse modulators are included in E5080B data sheet (5992-3843) or E5081A data sheet (3123-1369). The software also controls external pulse generators and modulators and can synchronize to external master pulses. The application I/O connector on the rear panel of the analyzer is recommended if using external master pulses or external pulse modulators.

Add Mechanical Noise Tuner Control for Noise Figure/Parameter Measurements (S96027B)

Noise figure measurements using application software S96029B utilize an ECal module as an impedance tuner to provide source- corrected noise figure and noise parameter measurements of nominally matched devices, with gamma-opts < 0.3. To measure noise parameters of unmatched devices with higher gamma- opts, an external tuner is needed. This application software enables control of Maury Microwave LXI tuners or Focus Microwaves' CCMT tuners in place of an ECal module, extending noise parameter measurements to devices with gamma-opts < 0.9. Requires application software S96029B. Refer to Maury Microwave's or Focus Microwaves' websites for more information about compatible tuners.

Noise Figure Measurements with Vector Correction (S96029B) using E5080B ENA

This software application enables high-accuracy noise figure and noise-power measurements of amplifiers, frequency converters, and mixers, utilizing Keysight's unique vector-source-correction technique that uses Keysight N469xD series ECal module as a source-impedance tuner[1] to remove the effects of imperfect system-source match. This approach yields accuracy that surpasses that provided by the Y-factor method and other cold-source implementations, especially for in-fixture, on-wafer, and automated-test environments. S96029B controls N469xD Series ECal modules configured as impedance tuners for use with the E5080B ENA.

A scalar-calibrated method is also available that offers less accuracy but is faster and does not require an impedance tuner. This method requires an external switch to isolate the E5080B's source signal during noise figure measurements. A 50-ohm load must be connected to the DUT's input using the switch.

The analyzer's standard receivers are used for noise figure measurements with the S96029B. An external preamplifier, filter(s) and switches are required for devices with < 30 dB of excess noise (gain plus noise figure in dB). Typical block diagrams of scalar-calibrated (left) and vector-calibrated (right) noise figure measurements are shown.

1. 8509x, N443x or N755xA Series ECal modules are not supported.

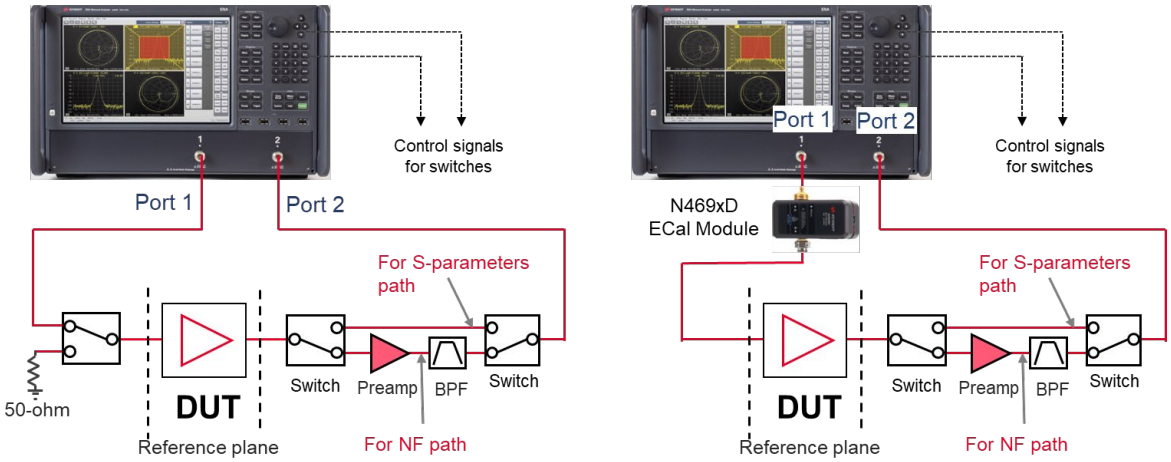

For calibration, a standard mechanical cal kit or ECal module is required for the S-parameter portion of the cal (an ECal used as a tuner cannot be shared for calibration). To calibrate a standard receiver for noise figure measurements, a power meter/sensor is required. A 346-serires noise source (Keysight 346C or 346C-K01 recommended) can be used for noise calibration of the instrument's receiver when a preamplifier is located before the receiver. All calibration accessories and external hardware must be ordered separately.

Noise figure measurements with the E5080B are not supported below 50 MHz or above 45 GHz.

Noise Figure Measurements with Vector Correction (S96029B) using E5081A ENA-X

This software application enables high-accuracy noise figure and noise-power measurements of amplifiers, frequency converters, and mixers, utilizing Keysight's unique vector-source-correction technique that uses Keysight N469xD series ECal module as a source-impedance tuner[1] to remove the effects of imperfect system-source match. This approach yields accuracy that surpasses that provided by the Y-factor method and other cold-source implementations, especially for in-fixture, on-wafer, and automated-test environments. S96029B controls N469xD Series ECal modules configured as impedance tuners for use with the E5081A ENA-X.

A scalar-calibrated method is also available that offers less accuracy but is faster and does not require an impedance tuner. Unlike E5080B ENA, E5081A ENA-X does not require an external switch to isolate the source signal during noise figure measurements.

If hardware options 0K1/0K2/0N1/0N2 are not ordered, then only the low and medium receiver gain settings are available for noise figure measurements. These settings are suitable for devices with gain + noise figure is > 30 dB. If the hardware options are ordered, in addition to the low and medium gain settings, the high gain setting is enabled. This makes the noise figure capability suitable for a wider range of devices. Hardware Options 0K1/0K2/0N1/0N2 are highly recommended if the instrument is to be used for noise figure characterization.

All E5081A (with and without Option 0K1/0K2/0N1/0N2) include the necessary filters to eliminate out-of-band noise conversion up to 40 GHz on ports 1 and 2. Below 160 MHz or above 40 GHz, an external bandpass filter may be required for noise figure measurements.

Typical block diagrams of scalar-corrected (left) vector-corrected (right) noise figure measurements with ENA-X are shown.

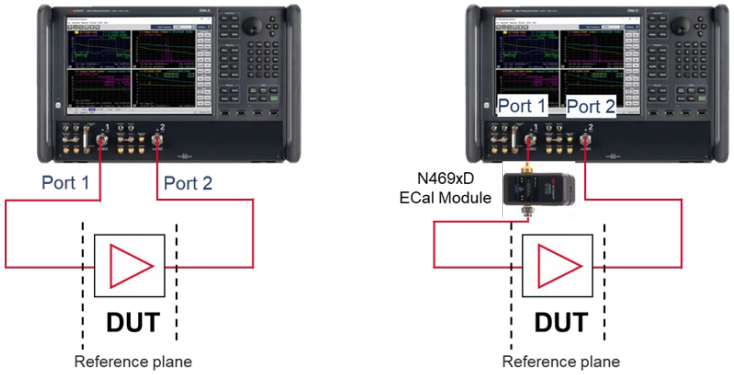

For calibration, a standard mechanical cal kit or ECal module is required for the S-parameter portion of the cal (an ECal used as a tuner cannot be shared for calibration). To calibrate a standard receiver for noise figure measurements, a power meter/sensor is required. A 346-serires noise source (Keysight 346C or 346C-K01 recommended) can be used for noise calibration of the instrument's receiver.

Noise figure measurements with the E5081A are not supported below 50 MHz.

1. 8509x, N443x or N755xA Series ECal modules are not supported.

IQ Data Bandwidth Up to 1.5 Ghz / 4 Ghz (S96050B/S96051B)

Industry-standard PathWave Vector Signal Analysis (89600 VSA) software enables single-connection multiple measurements of active device distortion analysis using the ENA-X. The VSA IQ data-link feature in either S960704B/707B modulation distortion or S960904B/907B spectrum analysis application allows you to send IQ data from the VNA to the VSA software and analyze demodulation EVM, AM-AM, AM-PM, and more.

Vector signal analysis with S96050B/S96051B is supported with the ENA-X. S96050B software license supports IQ bandwidth of up to 1.5 GHz, while S96051B supports bandwidth up to 4 GHz. The license is not required for bandwidth below 200 MHz.

Vector signal analysis with S96050B/S96051B is not supported with the E5080B ENA.

Maximum Bandwidth	Software License	E5080B ENA	E5081A ENA-X
29 MHz	Additional license not required	Yes	Yes
200 MHz	Additional license not required	Not available	Yes
1.5 GHz	S96050B	Not available	Yes
4 GHz	S96051B	Not available	Yes

Impedance Analysis (S96041B)

This software application enables the E5080B ENA to measure impedance parameters of Surface Mount Devices (SMDs) such as capacitors or inductors up to 10 GHz. The high-frequency impedance analysis solution consists of E5080B, S96041B and 16198A test fixture with option 010 to mount a small-sized SMD under test, with either 0402 mm (01005 inch) or 0201 mm (008004 inch) size. S96041B computes impedance parameters from measured data of E5080B using the 1-port reflection measurement method.

For calibration, S96041B provides two-step calibration for accurate impedance measurements – full 1-port calibration and enhanced fixture compensation. The 85052DH02 data-based calibration kit is required to perform full 1-port calibration to define the calibration plane at the 3.5-mm coaxial connector of 16198A's adapter. Then, fixture effects are removed with the special compensation method. Open/short fixture compensation eliminates the effects of residual impedance and stray admittance around the fixture's electrodes. The whole calibration process eliminates system errors associated with cables and test fixture and delivers accurate impedance measurements.

Refer to the solution brief (literature number 3121-1166.EN) for more details.

S96041B is not supported with E5081A ENA-X.

Modulation Distortion (S960704B/S960707B)

This application software with the E5081A ENA-X and a vector signal generator measures the in-channel and out-of-channel nonlinear behavior of power amplifiers or frequency converters under modulated stimulus conditions. It is based on a new frequency-domain measurement method that quickly measures EVM or ACPR and performs VNA calibration to make accurate measurements.

The software provides a full integrated measurement setup including modulation signal generation and allows the user to easily configure and make the measurements.

E5081A Option 2K6, 2N6, 2N7, 4K6, 4N6 or 4N7 with built-in upconverter are highly recommended for modulation distortion analysis using the application. While these internal hardware options are not required in running the application, without them the setup requires external components and is complex. The options with built-in upconverter greatly simplify the measurements. Vector signal generators covering frequencies of 6 GHz or higher are supported with the upconverter.

The maximum bandwidth of modulation distortion analysis is limited by the modulation source. For example, the maximum bandwidth is 960 MHz when used with N5186A with Option B9X (960 MHz bandwidth), and 2 GHz with M9383A/B or M9384B [1].

The signal generators [2] supported by this application are:

- M9383A PXIe Microwave Signal Generator, 1 MHz to 44 GHz
- M9383B/84B/M9484C VXG Microwave Signal Generator, 1 MHz to 44 GHz / 54 GHz
- M9410A/11A/15A/20A/21A VXT PXIe Vector Transceiver [3]
- N5182A/B MXG X-Series RF Vector Signal Generator, 100 kHz/9 kHz to 6 GHz
- N5186A MXG Vector Signal Generator, 9 kHz to 8.5 GHz
- N5192A/94A UXG X-Series Vector Adapter Modified Version, 50 MHz to 20 GHz, with U3039ACK 6 GHz Reference Source.

1. The maximum modulation bandwidth of E5081A-2N7/4N7 is frequency dependent. (The maximum bandwidth is 550 MHz for 31.8 GHz to 37 GHz, and 2 GHz for the rest of specified frequency ranges).
2. When Signal Studio is used, a waveform playback license N76xxEMBC is required for the external source. For more information, refer to Signal Studio Brochure (5989-6448EN).
3. M9420A Option 506 (60 MHz to 6 GHz) is supported. Option 504 (60 MHz to 3.8 GHz) is not supported.

Modulation distortion analysis for frequency converters requires S96083B, vector and scalar mixer/ converter measurements software. S96082B, scalar mixer/converter measurement software is not sufficient.
This application also includes a VSA IQ data-link feature for sending IQ data from the VNA to Keysight's Pathwave 89600 VSA software for demodulation and analysis of EVM, AM-AM/AM-PM, and more. With no additional license, the data link supports up to 200 MHz of modulation bandwidth with E5081A ENA-X and a 29 MHz bandwidth with E5080B ENA. S96050B/51B software licenses extend the modulation bandwidth to 1.5 GHz/4 GHz with ENA-X.

Scalar Mixer/Converter Measurements (S96082B)

S96082B provides Frequency Offset Mode (FOM) to set the frequency of the internal source(s) independently from where the receivers are tuned, and to configure external sources using External Device Configuration. This functionality is also included with S96029/083/084/086/089/090, both B and A models.

With a simple setup and calibration, this application delivers the highest accuracy for scalar conversion-loss/gain measurements by combining one-port and power-meter calibrations to remove mismatch errors. S96082B provides an intuitive and easy-to-use user interface for setting up mixer and converter measurements, with single or dual conversion stages. It can control external signal generators for use as LO signals. Supported external sources include the Keysight ESG, PSG, EXG, and MXG Series, as well as other SCPI-controlled signal generators.

S96082B is compatible with S96084B, which enables measurements of converters with internal Los.

Vector and Scalar Mixer/Converter Measurements (S96083B)

This application includes the scalar mixer/converter plus phase (SMC+Phase) measurement class that provides fully calibrated conversion gain/loss, relative phase, and absolute group delay measurements of mixers and converters without the need for reference or calibration mixers. Eliminating the calibration mixer requires a U9391C/F/G comb generator[1] and an external DC power supply capable of sourcing +15 V and 300 mA for U9391C/F or 800 mA for U9391G. A Vector Mixer Characterization (VMC) is also included for measuring group delay of frequency converting devices. VMC is used to characterize a calibration mixer supplied by the user.

SMC+Phase with the S96083B provides an intuitive and easy-to-use user interface for setting up mixer and converter measurements, with single or dual conversion stages. It can control the analyzer's built-in source(s) as well as external signal generators for use as LO signals. Supported external sources include the Keysight ESG, PSG, EXG, and MXG Series, as well as other SCPI-controlled signal generators.

S96083B is a superset of S96082B, so they should not be installed together. S96083B is compatible with S96084B, which enables measurements of converters with internal Los.

Embedded LO Capability (S96084B)

This application tunes the analyzer's receivers to the output frequency of the converter under test without the need for access to internal Los or a common reference signal. S96084B is intended to work with S96082B and S96083B measurement applications.

1. When a comb generator is used as a phase reference for calibration and the start frequency of the measurement is less than 630 MHz, a user-supplied calibration mixer is required.

Gain Compression Measurements (S96086B)

The Gain Compression Application (GCA) provides input power, output power, gain, and phase at the compression point of an amplifier or frequency converters, over a specified frequency range. GCA's SMART Sweep is very fast and easy-to-use. GCA also includes a guided calibration that corrects for absolute power levels, frequency response, and mismatch errors.

Intermodulation Distortion Measurements (S96087B) Using E5080B ENA

The Intermodulation Distortion (IMD) application makes it very easy to set up and calibrate swept-IMD measurements of both amplifiers and frequency converters. It controls the frequency and power of internal and external sources and tunes the receivers to the main tones as well as the IMD products in a single measurement channel. You can sweep either the center frequency of the two stimulus signals, the frequency spacing of the two stimulus signals about a fixed center frequency, the power of one or both stimulus signals, or the power of the LO signal. The analyzer can measure intermodulation distortion products of order 2, 3, 5, 7, or 9, and display the associated intercept points.

A 4-port E5080B with the internal second source option 4x2 is recommended for IMD measurements with each built-in source generating one tone. The most common method with the E5080B is to use two reference receivers for power leveling – the first tone signal (f1) is measured with the VNA's one receiver (e.g., a1 receiver of port 1), and the second tone signal (f2) is measured with another receiver (e.g., a3 receiver of port 3).

An external combiner (for example, hybrid power dividers 87302C, 87303C, or 87304C) is required to combine the tones. Any of the remaining ports can be used as the receive port. A typical configuration for IMD measurements with the 4-port E5080B-4x2 is shown.

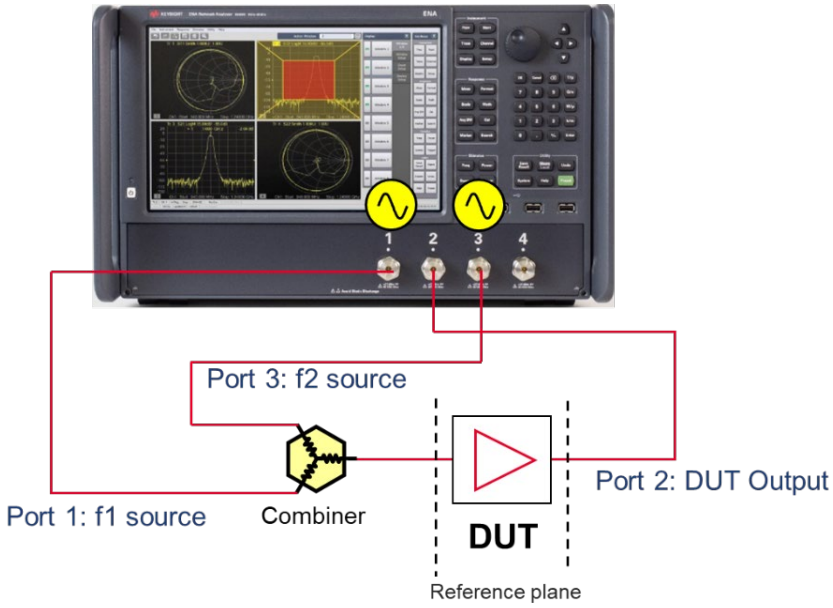

Intermodulation Distortion Measurements (S96087B) Using E5081A ENA-X

The Intermodulation Distortion (IMD) application makes it very easy to set up and calibrate swept-IMD measurements of both amplifiers and frequency converters. It controls the frequency and power of internal and external sources and tunes the receivers to the main tones as well as the IMD products in a single measurement channel. You can sweep either the center frequency of the two stimulus signals, the frequency spacing of the two stimulus signals about a fixed center frequency, the power of one or both stimulus signals, or the power of the LO signal. The analyzer can measure intermodulation distortion products of order 2, 3, 5, 7, or 9, and display the associated intercept points.

A 4-port E5081A is recommended for IMD measurements with each built-in source generating one tone. The recommended method with the E5081A is to use one reference receiver for power leveling – both first (f1) and second (f2) tone signals are measured with the VNA's one receiver. Unlike the E5080B, E5081A's internal couplers can be directly accessed, so the couplers can be placed as close as possible to input of the DUT. This configuration improves measurement accuracy of reflection measurements by eliminating insertion loss associated with a combiner.

An external combiner (for example, hybrid power dividers 87302C, 87303C, or 87304C) is required to combine the tones. Any of the remaining ports can be used as the receive port. A typical configuration for IMD measurements with the 4-port E5081A is shown.

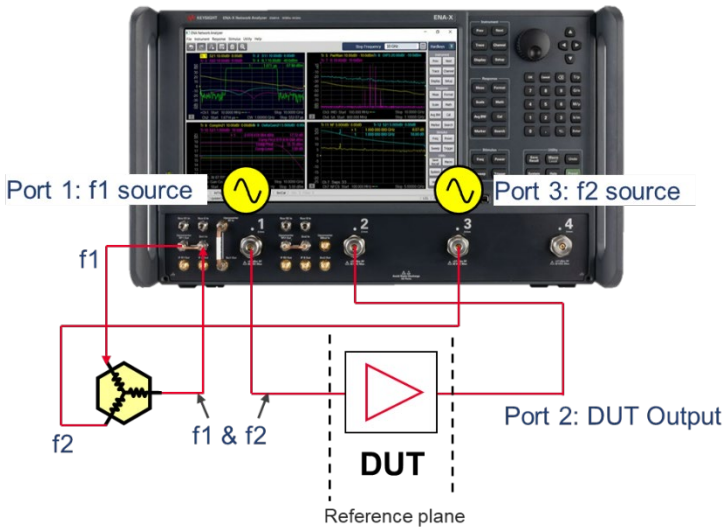

Source Phase Control (S96088B)

This application allows users to set calibrated, arbitrary phase differences between two internal sources with the E5080B's option 4x2 or E5081A's 4-port options. The phase difference can be fixed or swept between two specified phase values. S96088B also controls the relative power level between the sources using the receiver-leveling feature. S96088B is targeted for active-load control, where the analyzer provides a precise, electronically settable impedance to the output port of a device, while gain and output power are measured. This capability can be combined with external load-pull software to create traditional load-pull power contours. Not available with the E5080B option 2x0/4x0 or E5081A option 2xx with a single internal source.

Differential and I/Q Device Measurements (S96089B)

In systems with a single source, the S96089B software can be used to characterize the harmonics of an active device, such as an amplifier. The source is set to the fundamental frequency and the receivers can easily be set to a multiple to measure the fundamental (x1), second (x2), third (x3), or higher harmonics. Power sweeps can be used to characterize the harmonic levels versus power.

In systems with more than one source, the S96089B combines source-phase control of the internal or external sources with frequency-offset mode, enabling simplified test of I/Q modulators/converters and differential mixers, and harmonic measurements of differential amplifiers. The phase difference between sources can be fixed (for example, at 90 or 180 degrees), or swept between two specified phase values. Providing accurate control of the relative phase between sources eliminates the need for hybrid couplers and baluns to create quadrature or differential signals. After achieving the desired phase alignment, the instrument's receivers can be tuned to all frequencies needed to characterize the DUT. On an I/Q modulator for example, measurements can be made of both the desired and suppressed conversion bands, along with LO leakage, harmonics and other spurious signals. Phase sweeps can be used to determine a DUT's phase imbalance versus frequency.

In all cases, users can specify measurements with individual receivers or multiple receivers combined with a wide range of mathematical operators. Power measurements can employ match correction for increased accuracy.

Spectrum Analysis (S96090B for E5080B, S960904B/S960907B for E5081A)

The Spectrum Analyzer (SA) application adds high-performance microwave spectrum analysis to the analyzer. With fast stepped-FFT sweeps resulting from optimized data processing, the SA application provides quick spurious searches over broad frequency ranges. Simultaneous spectrum measurements can be done using test and reference receivers. This multi-channel SA can be used with the internal swept-signal generators for efficient measurements of spurious signals emanating from mixers and frequency converters. The SA application employs source-power and receiver-response calibration as well as fixture de-embedding, providing in-fixture and on-wafer spectrum measurements with the highest level of accuracy. Accurate and fast Noise Power Ratio (NPR) measurement capability is also included in this software application. It provides the ability of setting up and controlling of external signal generator/arbitrary waveform generators and performing the calibration of the flatness of a wideband signal and distortion signals in notches and achieving very fast NPR measurements. Optional external attenuators should be connected with the VNA's test ports to avoid receiver compression when measuring large signals.

This application also includes a VSA IQ data-link feature for sending IQ data from the VNA to Keysight's Pathwave 89600 VSA software for demodulation and analysis of EVM, AM-AM/AM-PM, and more. With no additional license, the data link supports up to 200 MHz of modulation bandwidth with E5081A ENA-X and a 29 MHz bandwidth with E5080B ENA. S95050B/51B software licenses extend the modulation bandwidth to 1.5 GHz/4 GHz with ENA-X.

For use with E5080B ENA, S96090B software with E5080B option 09x spectrum analysis hardware is required. There are two frequency choices intended for the E5081A ENA-X: S960904B to 20 GHz options and S96097B to 44 GHz options.

Active Hot Parameters (S96111B)

Active hot parameters software allows the analyzer a more accurate method for testing Hot S-parameter, gain and output power than traditional methods by utilizing the X-parameter technology.

It removes active device and system interaction to precisely calculate the active parameters and output power into a nominal 50-ohm environment. The advanced theory removes system-to-system correlation problems. S96111B also provides key parameters of optimal load for maximum power, maximum power delivered to optimal load, and the DUT's fundamental X-parameters. Total 14 traces (parameters) are available with various sweep types, such as frequency sweep, power sweep, or two-dimensional frequency and power sweep. Requires 4-port option configuration with the internal second source. S96111B covers up to 50 GHz.

True-Mode Stimulus (S96460B)

The application provides mismatch-corrected true-mode (true differential mode and true common mode) stimulus and enables accurate balanced measurements under real operating conditions. It also provides balanced measurements with forward-only sweeps, reverse-only sweeps, and frequency or power sweeps with arbitrary phase and amplitude offsets.

S96460B only works on E5080B's option 4x2 or E5081A's 4-port options with the internal second source.

Multiport Calibration Assistant (S96552B)

This application software provides a tool to flexibly create and manage cal sets for multiport measurements. For example, two cal sets with independent test ports can be combined as one cal set with a greater number of test ports. The software also offers a way to re-calibrate using a certain set of test ports to refresh the cal set.

At least one ECal module is required for the operation of S96552B.

Material Measurements

The Keysight N1500A materials measurement suite streamlines the process of measuring complex permittivity and permeability with a vector network analyzer. Various type of measurements, such as transmission line and free space, arch reflectivity, resonant cavity, and coaxial probe are available as options. The easy-to-use software guides the user through setup and measurement, instantly converting S-parameter network analyzer data into the data format of your choice and displaying the results within seconds. Results can be charted in a variety of formats: εr', εr", tand, μr', μr", tandμ, and Cole-Cole.

N1930xB Physical Layer Test System (PLTS) Software

The PLTS software platform has become an industry standard for calibration, measurement, and analysis of linear passive interconnects such as cables, connectors, backplanes, and printed circuit boards. Utilizing either a Vector Network Analyzer (VNA) or a Time Domain Reflectometer (TDR), fast and accurate measurements can be obtained without in-depth knowledge of microwave measurement techniques. Refer to www.keysight.com/find/plts or the technical overview (literature number 5989-6841EN) for more details.

Vector Network Analyzer (VNA) Simulator (S9405xB)

VNA simulator runs on your PC and simulates operations of Keysight's latest VNAs (PNA/ENA/PXI or Streamline Series VNA), eliminating the need for a VNA for your test program development. The simulator has standard and advanced versions. The standard version (S94050B) supports operations of standard S-parameter measurement class. The advanced version (S94051B) gives access to all advanced capabilities with S96xxxB software (e.g., spectrum analysis) for the ENA and ENA-X except S96007B or S96552B software.

S9405xB is available on subscription licenses only.

Device Measurement eXpert (DMX) (S94601B)

S94601B assists the users in setting up measurements automatically with customizable templates to use consistent measurement settings in different stages of design and test workflow. It supports various types of DUTs, and once the right DUT is selected, appropriate measurement parameters are listed, and the users can select the parameters of interest.

It provides intelligent algorithms that optimizes measurement setups based on instrument and DUT performance limitations and protects both the DUT and the instrument.

Limit Assistant (S94602B)

S94602B allows the users to acquire the data from a VNA or data file in csv, s2p or prn format and easily generate limit masks for complex limit test conditions with an intuitive and convenient graphical interface for production test applications.

Automated Measurement Expert (AMX)

This software package is a smart software solution for automated multiport S-parameter measurements with the 4-port E5080B or E5081A and E5092A. The S94701A AMX test plan builder provides an interactive GUI which helps you edit your multiport DUT test plans and generate test sequence files for the network analyzers. The S94702A and KS8400A software running on the analyzer executes the test sequences according to the optimized test sequence files generated by the S94701A.

A 4-port ECal module (i.e. N4431D or N4433D) is recommended for calibration wizard.



Figure 1. Multiport measurement setup using the E5080B ENA and E5092A Configurable Multiport Test Set

Restricted Feature Enable Licenses (S9480xb)

S9480xB licenses lift the restrictions of export-controlled features of the base firmware or other software applications.

S94800B-KL0 (Available as an option of the S9480XBU SW upgrade)

This license allows the users to use a feature, hybrid source, above 90 GHz. It is export controlled.

S94801B-KL1 (Available as an option of the S9480XBU SW upgrade)

This license allows the users to use a feature, hybrid source, under any of these restricted conditions. (The modulation bandwidths are limited without this license.)

- Modulation bandwidth > 2.2 GHz between 4.8 GHz and 31.8 GHz
- Modulation bandwidth > 550 MHz between 31.8 GHz and 37 GHz
- Modulation bandwidth > 2.2 GHz between 37 GHz and 75 GHz
- Modulation bandwidth > 5 GHz between 75 GHz and 90 GHz

S9480XBU Restricted Feature Enable License Upgrade This license allows you to add the S94800B-KL0 or the S94801B-KL1 on your E5080B or E5081A.

DisplayPort DP Cable Compliance Test Software (S94DPPCB)

This application software provides a fast and automated way to characterize and debug DisplayPort and DP Alt Mode on USB Type-C cable assemblies on UHBR, HBR, and RBR speed rate technologies. It performs compliance test automation with a 4-port VNA and generates a comprehensive test report including test limits, margins, and pass/fail status of each test parameter. The test plans performed by the S94DPPCB compliance test software are based on the latest DisplayPort and DP Alt Mode Compliance Test Specification (CTS) by Video Electronics Standards Association (VESA).

S94DPPCB supports multiport configurations using a 4-port VNA and L8990M-0LZ (e.g. 20-port switch matrix), which fully automates the test procedure and dramatically reduces the test time by eliminating manual cable reconnections.

S94DPPCB requires S96011B, KS8400B PathWave Test Automation and KS8401B HTML5 Result Listener Plugin.

Refer to http://www.keysight.com/find/S94DPPCB for more details.

USB Type-C Interconnects Compliance Test Software (S94USBCB)

This application software provides a fast and automated way to characterize and debug USB Type-C interconnect products such as cable assemblies, connectors, or raw cables on USB4, USB 3.2, USB 3.1, and USB 2.0 technologies. It also covers USB4 and USB 3.2 Linear Re-Driver (LRD) active cable assemblies and is Thunderbolt compatible to test TBT 3 and TBT 4 protocols. It allows to automatically execute compliance tests with a 4-port VNA based on the latest USB Type-C Compliance Test Specification (CTS) by USB-IF, and displays the comprehensive test results including test limits, margins, and pass/fail status of each test parameter.

S94USBCB supports multiport configurations using a 4-port VNA and L8990M-0LZ (e.g. 20-port switch matrix), which fully automates the test procedure and dramatically reduces the test time by eliminating manual cable reconnections. E5081A ENA-X is not recommended for USB Type-C low-speed signal test which requires measurements from 300 kHz.

S94USBCB requires S96011B, KS8400B PathWave Test Automation and KS8401B HTML5 Result Listener Plugin.

Refer to www.keysight.com/find/S94USBCB or S94USBCB USB Type-C Interconnects Compliance Software data sheet (literature number 3122-1253) for more details.

Automotive cable and interconnect test software (AE6910L, AE2010L)

Automotive cable, connector, and harness conformance software for Automotive Ethernet and SerDes standards. Supports cables, connectors, adapters, and harness assemblies for OPEN Alliance and IEEE Automotive Ethernet, including 10BASE-T1S, 100BASE-T1, and 1000BASE-T1 (UTP and STP), as well as TC9 channel and component requirements for fully shielded 1000BASE-T1 and 2.5/5/10GBASE-T1 in accordance with IEEE 802.3cg, 802.3bw, 802.3bp, and 802.3ch (AE6910L). Supports Automotive SerDes cable and channel validation for MIPI A-PHY, ASA, and OpenGMSL, including cables, connectors, adapters, and harnesses (AE2010L).

Automatically configures the VNA, executes compliance test sequences, and generates reports including insertion loss, return loss, crosstalk, and mode conversion measurements with pass/fail results.

Requirements: Requires a 4-port E5080B VNA and ECal. See the data sheet for other supported VNA models and ECals. Requires AE6800C, KS8400B PathWave Test Automation and S96010B time domain analysis. Refer to Automotive Ethernet Channel Testing (3121-1480) and Automotive SerDes Channel Testing (3121-1417) for additional information.

PathWave Vector Signal Analysis (89600 VSA) Software

PathWave Vector Signal Analysis (89600 VSA) software is a comprehensive set of tools for demodulation and vector signal analysis. Supporting E5080B's Option 09x/190 or E5081A, the software provides the flexibility and sophisticated measurement tools essential to find and fix signal problems. The multi-channel measurement capability can configure, execute and display multiple measurements simultaneously to characterize numerous signals. Powerful display tools enable comparisons and correlation of results from different measurements.

VSA IQ data link feature in either S96090B/S960904B/S960907B spectrum analysis software or S960704B/707B modulation distortion analysis software is required to enable vector signal analysis using the ENA/ENA-X.

Refer to www.keysight.com/find/89600 to learn more about 89600 VSA software.

Keysight Software Licensing Options Provide Flexibility and Support

Projects ramp up and down, teams grow and shrink, and projects move location. In such a dynamic environment, you need flexible licensing options that allow you to balance your project's requirements. Whether your software will be a staple for years to come or you have a short-term need for a leading-edge measurement application, Keysight's licensing puts you in charge.

Choose Your Term. Choose Your Type. Keep Control of Your Budget.

- Select a node-locked, transportable, USB portable or floating license type, depending on how much flexibility you need.
- Select a subscription or perpetual license term, depending on how long you need to use the software.
- Each license is sold with a KeysightCare software support subscription which provides technical support with ensured response time, proactive software updates and enhancements.

Choose a license term and type that best suits your requirements from the table below.

License term [1]

License Term	Options
Perpetual	Perpetual licenses can be used indefinitely.
Subscription	Licenses can be used through the term of the subscription (6, 12, 24, or 36 month)

License type

License Type	Descriptions
Node locked	License can be used on one specified instrument/computer.
Transportable	License can be used on one instrument/computer at a time but may be transferred to another using Keysight Software Manager (internet connection required).
USB portable	License can be used on one instrument/computer at a time but can be transferred to another using a certified USB dongle (available for additional purchase, Keysight part number E8900-D10).
Floating	Networked instruments/computers can access a license from a server one at a time. Multiple licenses may be purchased for concurrent usage. Three types of floating license are available: Single Site: 1-mile radius from the server Single Region[1]: Americas, Europe, Asia Worldwide (export restriction identified in End User License Agreement (EULA))

1. For S96xxxB software, the fixed-perpetual with a 12/24/36/60-months, support subscription is the only license type that can be ordered as part of the instrument and installed. The other license types for S96xxxB software must be ordered separately and installed from the web after the receipt of the instrument.
2. Americas (North, Central, and South America, Canada); Europe (European Continent, Middle Eastern Europe, Africa, India); Asia (North and South Asia Pacific Countries, China, Taiwan, Japan).

KeysightCare Software Support Subscription Provides Peace of Mind Amid Evolving Technologies

- Ensure your software is always current with the latest enhancements and measurement standards.
- Gain additional insight into your measurement problems with live access to our team of technical experts.
- Stay on schedule with fast turnaround times and priority escalations when you need support

KeysightCare software support subscription

Subscription	Descriptions
KeysightCare software support	Perpetual licenses are sold with a 12 (default), 24, 36, or 60-month software support subscription. Support subscriptions may be renewed for a fee after that.
	Software subscription licenses include a software support subscription through the term of the license.

Upgrade Your System

Upgrade kits are available to add options after initial purchase. To upgrade your VNA, order the corresponding item number. To add application software on ENA or ENA-X, order the appropriate standalone model numbers (S96xxxB).

A complete list of E5080B upgrade kits is available on our Web site: www.keysight.com/find/e5080b-upgrades

A complete list of E5081A upgrade kits is available on our Web site: www.keysight.com/find/e5081a-upgrades

E5092A Configurable Multiport Test Set

The E5092A configurable multiport test set is offered for use with the 4-port E5080B or E5081A to extend the number of test ports. Multiport measurements from 50 MHz to 20 GHz can be made by connecting the optional interconnect semi-rigid cables to the E5092A's front panel.

Test Set Options

Choose Option 020. Option 020 is the only test set option for the E5092A.

Option Number	Description	Additional Information
E5092A-020	20 GHz switching test set	Up to 22-port or 10-port full crossbar measurements.

Cable and Adapter Options

Choose one of the interconnect cable and adapter set for your 4-port E5080B ENA.

Option Number [1, 2]	Description	Additional Information
E5092A-09B	Cable and adapters for connection to E5080B Option 440/460/490/4D0/4H0	Adds SMA semi-rigid cables and type-N-to-SMA adapters for connection to the E5080B with type-N connectors.
E5092A-20B	Cable and adapters for connection to E5080B Option 4D0/4K0/4L0	Adds SMA semi-rigid cables and 3.5 mm-to-3.5 mm adapters for connection to the E5080B with 3.5-mm connectors.

1. E5092AU upgrade kits are available to add cable and adapter options after initial purchase. Order the corresponding item number (E5092AU-09B or E5092AU-20B).
2. Interconnect cables are not offered for 4-port E5081A ENA-X.

Docking Plate Options

Choose option 300 for the connection of the E5080B and E5092A.

Option Number [1]	Description	Additional Information
E5092A-300	Docking plate kit for the E5080B	

1. E5092AU upgrade kits are available to add docking plate kit options after initial purchase. Order the corresponding item number (E5092AU-300).

Accessories, Calibration Options

Option Number	Description	Additional Information
E5092A-1CM	Rack mount kit only	Adds a rack mount kit for use without handles.
E5092A-1CN	Front handle kit only	Adds a front handle kit.
E5092A-1CP	Rack mount kit with handle kit	Adds a rack mount and front handle kit.
E5092A-1A7	ISO 17025 compliant calibration	
E5092A-A6J	ANSI Z540 compliant calibration	

Measurement Accessories

A complete list of RF and microwave test accessories is available on our Web site: www.keysight.com/find/mta

Accessories are available in these connector types: 50 Ω Type-N, 3.5 mm, 7 mm, 2.4 mm, 2.92 mm, 1.85 mm, 1.0 mm, and waveguide. Test port cables and a calibration kit should be added for a complete measurement system. A verification kit is used to verify corrected system performance.

Cable and Adapter Sets

Keysight offers cables in the following types:

- Single cables in semi-rigid and flexible
- Cable sets in semi-rigid and flexible

There are also adapter sets available that protect the test port and convert the port to the desired connector interface. These kits contain:

- One male adapter
- One female adapter

To attain the best mechanical rigidity for device connection, use a single cable and the appropriate special adapter set. To attain the greatest flexibility for device connection, use a cable set.

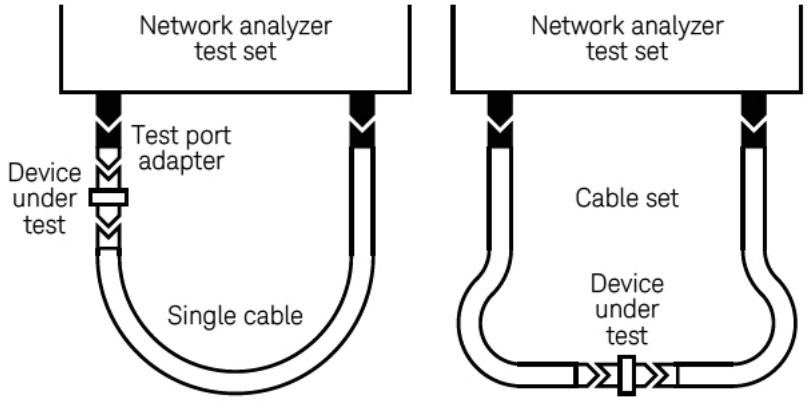

Cable and Adapter Sets

Coaxial measurements

Mechanical calibration kits include standards, such as opens, shorts and loads, which are measured by the network analyzer for increased measurement accuracy.

Choose a calibration kit for each connector type to be used.

Economy, includes:

- Open standards (male and female)
- Short standards (male and female)
- Fixed-termination standards (male and female)

Standard, includes the devices in the economy kit and adds:

- Sliding load standards (male and female) or a series of offset shorts

Precision, includes the devices in the economy kit and adds:

- 50 Ω airline(s) for TRL calibration
- TRL adapters

Electronic Calibration (ECal) kits replace mechanical calibration standards with one solid-state calibration module that is controlled by the network analyzer via USB, to present many different impedances to the test ports. A full two-port calibration can be performed quickly with a single connection. This technique reduces operator errors and connector wear and abrasion.

For more information about ECal modules, refer to the technical overview 5963-3743E (N4690, 85090, N4430, N7550, and N7560 Series).

Waveguide measurements

For waveguide measurements, Keysight offers mechanical calibration kits that include:

- Waveguide-to-coax adapters (X, P, K, R, Q, U, V)
- Precision waveguide section
- Flush short circuit
- Fixed terminations
- Straight section

For Devices with 1.85 mm Connectors

Mechanical calibration kits

85058B standard: DC to 67 GHz. Includes:

- 85058-60101 1.85 mm (m) short 5.4 mm
- 85058-60102 1.85 mm (m) short 6.3 mm
- 85058-60103 1.85 mm (m) short 7.12 mm
- 85058-60104 1.85 mm (m) short 7.6 mm
- 85058-60105 1.85 mm (f) short 5.4 mm
- 85058-60106 1.85 mm (f) short 6.3 mm
- 85058-60107 1.85 mm (f) short 7.12 mm
- 85058-60108 1.85 mm (f) short 7.6 mm
- 85058-60109 1.85 mm male open
- 85058-60110 1.85 mm female open
- 85058-60111 1.85 mm male load
- 85058-60112 1.85 mm female load
- 85058-60113 1.85 mm (m) to 1.85 mm (m) adapter
- 85058-60114 1.85 mm (f) to 1.85 mm (f) adapter
- 85058-60115 1.85 mm (m) to 1.85 mm (f) adapter

85058E economy: DC to 67 GHz. Includes:

- 85058-60101 1.85 mm (m) short 5.4 mm
- 85058-60105 1.85 mm (f) short 5.4 mm
- 85058-60109 1.85 mm male open
- 85058-60110 1.85 mm female open
- 85058-60123 1.85 mm male load
- 85058-60124 1.85 mm female load
- 85058-60113 1.85 mm (m) to 1.85 mm (m) adapter
- 85058-60114 1.85 mm (f) to 1.85 mm (f) adapter
- 85058-60115 1.85 mm (m) to 1.85 mm (f) adapter

Electronic calibration kits

N4694D Microwave ECal: DC or 10 MHz to 67 GHz, 2-ports. Includes:

- Option F0F: Both connectors are 1.85 mm female on module
- Option M0F: 1 female and 1 male 1.85 mm connector on module
- Option M0M: Both connectors are 1.85 mm male on module
- Option 0DC: DC to 67 GHz
- Option 100: 10 MHz to 67 GHz
- Option 00A adds:
  - 85058-60113 1.85 mm (m) to 1.85 mm (m) adapter
  - 85058-60114 1.85 mm (f) to 1.85 mm (f) adapter

Cables

- N4697J [1] Single, flexible cable up to 70 GHz:
  - 1.85 mm (f) to 1.85 mm (f), 96.5 cm, 38 inches
- N4697K [1] Set, flexible cable set up to 70 GHz
  - One 1.85 mm (f) to 1.85 mm (f) cable, 62.2 cm, 24.5 inches, and one 1.85 mm (f) to 1.85 mm (m) cable, 62.2 cm, 24.5 inches
- N4421B-K67 Single, flexible: 1.85 mm (f) to 1.85 mm (m), 91.4 cm, 36 inches

Adapter sets

- 85130H [1] 1.85 mm to 1.85 mm

1. Special rugged female connector specifically for connecting to the network analyzer test port but does not mate with a standard male connector.

For Devices with 2.4 mm Connectors

Mechanical calibration kits

85056A standard: DC to 50 GHz. Includes:

- 00901-60003 2.4 mm (m) fixed broadband load
- 00902-60004 2.4 mm (f) fixed broadband load
- 00915-60003 2.4 mm (m) sliding load
- 00915-60004 2.4 mm (f) sliding load
- 85056-60005 2.4 mm (m) to 2.4 mm (m) adapter
- 85056-60006 2.4 mm (f) to 2.4 mm (f) adapter
- 85056-60007 2.4 mm (m) to 2.4 mm (f) adapter
- 85056-60020 2.4 mm (m) short
- 85056-60021 2.4 mm (f) short
- 85056-60022 2.4 mm (m) open
- 85056-60023 2.4 mm (f) open

85056D economy: DC to 50 GHz. Includes:

- 00901-60003 2.4 mm (m) fixed broadband load
- 00902-60004 2.4 mm (f) fixed broadband load
- 85056-60005 2.4 mm (m) to 2.4 mm (m) adapter
- 85056-60006 2.4 mm (f) to 2.4 mm (f) adapter
- 85056-60007 2.4 mm (m) to 2.4 mm (f) adapter
- 85056-60020 2.4 mm (m) short
- 85056-60021 2.4 mm (f) short
- 85056-60022 2.4 mm (m) open
- 85056-60023 2.4 mm (f) open

Electronic calibration kits

N4693D Microwave ECal: DC or 10 MHz to 50 GHz, 2-ports. Includes:

- Option F0F: Both connectors are 2.4 mm female on module
- Option M0F: 1 female and 1 male 2.4 mm connector on module
- Option M0M: Both connectors are 2.4 mm male on module
- Option 0DC: DC to 50 GHz
- Option 100: 10 MHz to 50 GHz
- Option 00A adds:
  - 85056-60005 2.4 mm (m) to 2.4 mm (m) adapter
  - 85058-60006 2.4 mm (f) to 2.4 mm (f) adapter

Cables

Note: Keysight offers the following 2.4 mm test port cables. Adapters will be necessary when using these cables for 2.92 mm measurements.

- 85133C [1] single, semi-rigid: 2.4 mm (f) to PSC-2.4 mm (f), 81 cm, 32 inches
- 85133D [1] set, semi-rigid:
  - One 2.4 mm (f) to 2.4 mm (m), 53 cm, 21 inches, p/n 85133-60001
  - One 2.4 mm (f) to 2.4 mm (f), 53 cm, 21 inches, p/n 85133-60002
- 85133E [1] single, flexible: 2.4 mm (f) to PSC-2.4 mm (f), 97 cm, 38 inches
- 85133F [1] set, flexible:
  - One 2.4 mm (f) to 2.4 mm (f), 63 cm, 25 inches, p/n 85133-60016
  - One 2.4 mm (f) to 2.4 mm (m), 63 cm, 25 inches, p/n 85133-60017
- 85133H [1] Single, flexible: 2.4 mm (f) to 2.4 mm (m), 63 cm, 25 inches
- N4421AK20 Single, flexible: 2.4 mm (f) to 2.4 mm (m), 91.4 cm, 36 inches

Adapter sets

- 85130E 2.4 mm [1] to 7 mm
- 85130F 2.4 mm [1] to 3.5 mm
- 85130G 2.4 mm [1] to 2.4 mm

1. Special rugged female connector specifically for connecting to the network analyzer test port but does not mate with a standard male connector.

For Devices with K Connectors (2.92 mm) Connectors

Mechanical calibration kits

85056KE01 DC to 40 GHz

For use with user supplied 2.92 mm test port cables. 2.92 mm (K connector) calibration kit with fixed and sliding loads. The Keysight 85056KE01 calibration kit is an ordering convenience to allow the pass-through ordering from Keysight for the Maury 8770E47 calibration.

85056KE02 DC to 40 GHz

For use with user supplied 2.92 mm test ports cables. 2.92 mm (K connector) calibration kit with fixed loads only. The Keysight 85056KE02 calibration kit is an ordering convenience to allow the pass-through ordering from Keysight for the Maury 8770F47 calibration kit.

The 85056KE01 and 85056KE02 contains one NMD 2.4 mm [1] (f) to 2.92 mm (f) and one NMD 2.4 mm [1] (f) to 2.92 mm (m) test port adapter to adapt the 2.4 mm test ports of the PNA to 2.92 mm. It also supplies 2.92 mm to 2.92 mm in-series adapters (3 adapters) and a PNA Cal Coefficients on a USB stick. Users must supply their own 2.92 mm or K-connector test port cables. Also included is a 2.92 mm torque wrench.

Maury Microwave Terms and Conditions for Warranty and Return apply. Maury Microwave Corp. calibration kits are to be returned directly to Maury Microwave for service, repair, or calibration issues and not to Keysight Technologies. For additional information go to www.maurymicrowave.com. Keysight Technologies does not guarantee the performance of the Maury calibration kits or the system performance when connected to Keysight vector network analyzers.

1. Special rugged female connector specifically for connecting to the network analyzer test port but does not mate with a standard male connector.

Electronic calibration kits

N4692D Microwave ECal: DC or 10 MHz to 40 GHz, 2-ports. Includes:

- Option F0F: Both connectors are 2.92 mm female on module
- Option M0F: 1 female and 1 male 2.92 mm connector on module
- Option M0M: Both connectors are 2.92 mm male on module
- Option 0DC: DC to 40 GHz
- Option 100: 10 MHz to 40 GHz
- Option 00A adds:
  - N4692-60021 2.92 mm (m) to 2.92 mm (m) adapter
  - N4692-60022 2.92 mm (f) to 2.92 mm (f) adapter

Cables

Note: Keysight offers the following 2.4 mm test port cables. Adapters will be necessary when using these cables for 2.92 mm measurements.

- 85133C [1] single, semi-rigid: 2.4 mm (f) to PSC-2.4 mm (f), 81 cm, 32 inches
- 85133D [1] set, semi-rigid:
  - One 2.4 mm (f) to 2.4 mm (m), 53 cm, 21 inches, p/n 85133-60001
  - One 2.4 mm (f) to 2.4 mm (f), 53 cm, 21 inches, p/n 85133-60002
- 85133E [1] single, flexible: 2.4 mm (f) to PSC-2.4 mm (f), 97 cm, 38 inches
- 85133F [1] set, flexible:
  - One 2.4 mm (f) to 2.4 mm (f), 63 cm, 25 inches, p/n 85133-60016
  - One 2.4 mm (f) to 2.4 mm (m), 63 cm, 25 inches, p/n 85133-60017
- 85133H [1] Single, flexible: 2.4 mm (f) to 2.4 mm (m), 63 cm, 25 inches
- N4421AK20 Single, flexible: 2.4 mm (f) to 2.4 mm (m), 91.4 cm, 36 inches

1. Special rugged female connector specifically for connecting to the network analyzer test port but does not mate with a standard male connector.

Adapter sets

- 11904A 2.4 mm (m) to 2.92 mm (m)
- 11904B 2.4 mm (f) to 2.92 mm (f)
- 11904C 2.4 mm (m) to 2.92 mm (f)
- 11904D 2.4 mm (f) to 2.92 mm (m)
- 11904S 2.4 mm to 2.92 mm, adapter set, contains 4 matched adapters

For Devices with 3.5 mm or SMA Connectors

Mechanical calibration kits

85033E economy: DC to 9 GHz. Includes:

- 85033-60016 3.5 mm (m) load
- 85033-60017 3.5 mm (f) load
- 85033-60018 3.5 mm (m) open
- 85033-60019 3.5 mm (f) open
- 85033-60020 3.5 mm (m) short
- 85033-60021 3.5 mm (f) short
- 8710-1761 torque wrench
- Option 100 adds:
  - 85027-60005 3.5 mm (f) to 3.5 mm (f) adapter
- Option 200 adds:
  - 85027-60007 3.5 mm (m) to 3.5 mm (m) adapter
- Option 300 adds:
  - 85027-60006 3.5 mm (m) to 3.5 mm (f) adapter
- Option 400 adds:
  - 1250-1744 3.5 mm (f) to 50 Ω Type-N (m) adapter
  - 1250-1743 3.5 mm (m) to 50 Ω Type-N (m) adapter
  - 1250-1745 3.5 mm (f) to 50 Ω Type-N (f) adapter
  - 1250-1750 3.5 mm (m) to 50 Ω Type-N (f) adapter
- Option 500 adds:
  - 1250-1746 3.5 mm (m) to 7 mm adapter (two included)
  - 1250-1747 3.5 mm (f) to 7 mm adapter (two included)

85052B standard: DC to 26.5 GHz. Includes:

- 00902-60003 3.5 mm (m) fixed load
- 00902-60004 3.5 mm (f) fixed load
- 00911-60019 3.5 mm (m) sliding load
- 00911-60020 3.5 mm (f) sliding load
- 85052-60006 3.5 mm (m) short
- 85052-60007 3.5 mm (f) short
- 85052-60008 3.5 mm (m) open
- 85052-60009 3.5 mm (f) open
- 85052-60012 3.5 mm (f) to 3.5 mm (f) adapter
- 85052-60013 3.5 mm (f) to 3.5 mm (m) adapter
- 85052-60014 3.5 mm (m) to 3.5 mm (m) adapter

85052C precision TRL: DC to 26.5 GHz. Includes:

- 00902-60003 3.5 mm (m) fixed load
- 00902-60004 3.5 mm (f) fixed load
- 85052-60006 3.5 mm (m) short
- 85052-60007 3.5 mm (f) short
- 85052-60008 3.5 mm (m) open
- 85052-60009 3.5 mm (f) open
- 85052-60032 3.5 mm (f) to 3.5 mm (f) adapter
- 85052-60033 3.5 mm (m) to 3.5 mm (m) adapter
- 85052-60034 3.5 mm (f) to 3.5 mm (m) adapter
- 85052-60035 3.5 mm short TRL line
- 85052-60036 3.5 mm long TRL line

85052D economy: DC to 26.5 GHz. Includes:

- 00902-60003 3.5 mm (m) fixed load
- 00902-60004 3.5 mm (f) fixed load
- 85052-60006 3.5 mm (m) short
- 85052-60007 3.5 mm (f) short
- 85052-60008 3.5 mm (m) open
- 85052-60009 3.5 mm (f) open
- 85052-60012 3.5 mm (f) to 3.5 mm (f) adapter
- 85052-60013 3.5 mm (f) to 3.5 mm (m) adapter
- 85052-60014 3.5 mm (m) to 3.5 mm (m) adapter

85052DH02 economy with data-based calibration standards: DC to 26.5 GHz. Includes:

- 5972-3342 USB flash drive
- 00902-60003 3.5 mm (m) fixed load
- 00902-60004 3.5 mm (f) fixed load
- 85052-60006 3.5 mm (m) short
- 85052-60007 3.5 mm (f) short
- 85052-60008 3.5 mm (m) open
- 85052-60009 3.5 mm (f) open
- 85052-60012 3.5 mm (f) to 3.5 mm (f) adapter
- 85052-60013 3.5 mm (f) to 3.5 mm (m) adapter
- 85052-60014 3.5 mm (m) to 3.5 mm (m) adapter

Electronic calibration kits

85093D RF ECal, DC or 300 kHz to 9 GHz, 2-ports. Includes:

- Option 003: 300 kHz to 9 GHz
- Option 0DC: DC to 9 GHz
- Option 00A: Add 3.5 mm adapters
- Option 00F: Both 3.5 mm connectors are female on module
- Option 00M: Both 3.5 mm connectors are male on module
- Option M0F: One female and one male connector, both 3.5 mm

85093D-xxx mixed-connector options

Port A Option			Port B Option		
Connector Type	**Female**	**Male**	**Connector Type**	**Female**	**Male**
3.5 mm	101	102	Type-N	203	204
			7-16	205	206
			4.3-10	207	208

N4431D Microwave ECal: DC to 13.5 GHz, 4 ports. Includes:

- Option 0DC: DC to 13.5 GHz (mandatory)
- Option 010: 3.5 mm female connector on four ports on module
- Option 020: Type-N female connector on four ports on module

N4431D-xxx mixed-connector options

Connector Type	Port A Option	Port B Option	Port C Option	Port D Option
Four 3.5 mm (f)	010			
Four Type-N 50 Ω (f)	020			
3.5 mm (f)	101	201	301	401
3.5 mm (m)	102	202	302	402
Type-N 50 Ω (f)	103	203	303	403
Type-N 50 Ω (m)	104	204	304	404
7-16 (f) [1]	105	205	305	405
7-16 (m) [1]	106	206	306	406
4.3-10 (f) [2]	107	207	307	407
4.3-10 (m) [2]	108	208	308	408

1. Limits ECal module high frequency to 7.5 GHz.
2. Limits ECal module high frequency to 7.5 GHz.

N4433D Microwave ECal: DC or 300 kHz to 26.5 GHz, 4 ports. Includes:

- Option 0DC: DC to 26.5 GHz
- Option 003: 300 kHz to 26.5 GHz
- Option 010: 3.5 mm female connector on four ports on module

N4433D-xxx mixed-connector options

Connector Type	Port A Option	Port B Option	Port C Option	Port D Option
Four 3.5 mm (f)	010			
3.5 mm (f)	101	201	301	401
3.5 mm (m)	102	202	302	402

N4691D Microwave ECal, DC or 300 kHz to 26.5 GHz, 2-ports. Includes:

- Option F0F: Both 3.5 mm connectors are female
- Option M0F: One female and one male connector, both 3.5 mm
- Option M0M: Both 3.5 mm connectors are male
- Option 0DC: DC to 26.5 GHz
- Option 003: 300 kHz to 26.5 GHz
- Option 00A adds:
  - 85052-60012 3.5 mm (f) to 3.5 mm (f) adapter
  - 85052-60014 3.5 mm (m) to 3.5 mm (m) adapter

N755xA Economy ECal, 2-ports. Includes:

- N7550A DC to 4 GHz, 2-ports
- N7551A DC to 6.5 GHz, 2-ports
- N7552A DC to 9 GHz, 2-ports
- N7553A DC to 14 GHz, 2-ports
- N7554A DC to 18 GHz, 2-ports
- N7555A DC to 26.5 GHz, 2-ports
- Option 3FF: Both 3.5 mm connectors are female
- Option 3MF: One female and one male connector, both 3.5 mm
- Option 3MM: Both 3.5 mm connectors are male
- Option 150: Plastic storage box
- N7550X-151: 3.5 mm or 2.92 mm torque wrench

Cables

- 85131C [1] single, semi-rigid: 3.5 mm (f) to PSC-3.5 mm (f), 81 cm, 32 inches
- 85131D [1] set, semi-rigid:
  - One 3.5 mm (f) to 3.5 mm (m), 53 cm, 21 inches, p/n 85131-60009
  - One 3.5 mm (f) to PSC-3.5 mm (f), 53 cm, 21 inches, p/n 85131-60010
- 85131E [1] single, flexible: 3.5 mm (f) to PSC-3.5 mm (f), 96.5 cm, 38 inches
- 85131F [1] set, flexible:
  - One 3.5 mm (f) to 3.5 mm (m), 62.2 cm, 24.5 inches, p/n 85131-60012
  - One 3.5 mm (f) to PSC-3.5 mm (f), 62.2 cm, 24.5 inches, p/n 85131-60013
- 85131H [1] single, flexible: 3.5 mm (f) to 3.5 mm (m), 62.2 cm, 24.5 inches
- 85134E [1] single, flexible: PSC-3.5 mm (f) to 2.4 mm (f), 96 cm, 38 inches
- 85134F [1] set, flexible:
  - One 2.4 mm (f) to PSC-3.5 mm (f), 53 cm, 21 inches, p/n 85134-60004
  - One 2.4 mm (f) to PSC-3.5 mm (m), 53 cm, 21 inches, p/n 85134-60003
- 85134H [1] single, flexible: 2.4 mm (f) to PSC-3.5 mm (m), 53 cm, 21 inches
- N4419AK20 single, flexible: 3.5 mm (m) to 3.5 mm (f), 91.4 cm, 36 inches
- Z5623A-K20 single, flexible: 3.5 mm (m) to 3.5 mm (m), 91.4 cm, 36 inches

Adapter sets

- 85130D 3.5 mm [1] to 3.5 mm

1. Special rugged female connector specifically for connecting to the network analyzer test port but does not mate with a standard male connector.

Connector repair kits

3.5 mm connector repair kit

- 85052-60049 Repair kit slotless
- 85052-60050 Contact – 3.5 package of 10
- 85052-60051 Repair kit slotless

Test fixtures

16198A bottom electrode SMD test fixture

- Option 010 10 GHz test fixture and adapter box
- Option 100 Standard set for 0201 (0.2 x 0.1 mm) surface mount devices (SMDs) [1, 2]
- Option 200 Standard set for 0402 (0.4 x 0.2 mm) surface mount devices (SMDs) [1, 3]
- Option 101 Contact board (Guide PCA 0201, 70 micrometer)
- Option 102 Contact board (Guide PCA 0201, 100 micrometer)
- Option 201 Contact board (Guide PCA 0402, 100 micrometer)
- Option 110 0201 short bar 5-piece set
- Option 210 0402 short bar 5-piece set
- Option 520 Weight 50 g
- Option 521 Weight 100 g
- Option 522 Weight 200 g
- Option 530 Carrying case
- Option 531 Torque driver

1. 16198A Option 100 and 200 are mutually exclusive.
2. Includes all accessories of Option 101/102/110/520/521/522.
3. Includes all accessories of Option 201/210/520/521/522.

For Devices with Type-N Connectors

Mechanical calibration kits

85032F standard: DC to 9 GHz. Includes:

- 85032-60017 Type-N (m) fixed load
- 85032-60018 Type-N (f) fixed load
- 85032-60013 Type-N (m) open
- 85032-60014 Type-N (f) open
- 85032-60016 Type-N (m) short
- 85032-60015 Type-N (f) short
- Option 100 adds:
  - 85032-60021 Type-N (f) to Type-N (f) adapter
- Option 200 adds:
  - 85032-60019 Type-N (m) to Type-N (m) adapter
- Option 300 adds:
  - 85032-60020 Type-N (m) to Type-N (f) adapter
- Option 500 adds:
  - 85054-60001 Type-N (f) to 7 mm adapter (two included)
  - 85054-60009 Type-N (m) to 7 mm adapter (two included)

85054B standard: DC to 18 GHz. Includes:

- 00909-60011 Type-N (m) fixed low-band load
- 00909-60012 Type-N (f) fixed low-band load
- 85054-60025 Type-N (m) short
- 85054-60026 Type-N (f) short
- 85054-60027 Type-N (m) open
- 85054-60028 Type-N (f) open
- 85054-60031 Type-N (f) to 7mm adapter
- 85054-60032 Type-N (m) to 7mm adapter
- 85054-60037 Type-N (f) to Type-N (f) adapter
- 85054-60038 Type-N (m) to Type-N (m) adapter
- 85054-80010 Type-N (f) sliding load
- 85054-80009 Type-N (m) sliding load
- 85054-60050 Type-N (f) connector gage
- 85054-60052 Type-N (f) gage master
- 85054-60051 Type-N (m) connector gage
- 85054-60053 Type-N (m) gage master

85054D economy: DC to 18 GHz. Includes:

- 85054-60025 Type-N (m) short
- 85054-60026 Type-N (f) short
- 85054-60027 Type-N (m) open
- 85054-60028 Type-N (f) open
- 85054-60031 Type-N (f) to 7mm adapter
- 85054-60032 Type-N (m) to 7mm adapter
- 85054-60037 Type-N (f) to Type-N (f) adapter
- 85054-60038 Type-N (m) to Type-N (m) adapter
- 85054-60046 Type-N (m) fixed load
- 85054-60047 Type-N (f) fixed load

Electronic calibration kits

85092D RF ECal, DC or 300 kHz to 9 GHz, 2-ports. Includes:

- Option 003: 300 kHz to 9 GHz
- Option 0DC: DC to 9 GHz
- Option 00A: Add Type-N 50 Ω adapters
- Option 00F: Both Type-N 50 Ω connectors are female on module
- Option 00M: Both Type-N 50 Ω connectors are male on module
- Option M0F: One female and one male connector, both type-N 50 Ω

85092D-xxx mixed-connector options

Port A Option			Port B Option		
Connector Type	**Female**	**Male**	**Connector type**	**Female**	**Male**
Type-N	103	104	3.5 mm	201	202
			7-16	205	206
			4.3-10	207	208

N4431D Microwave ECal: DC to 13.5 GHz, 4 ports. Includes:

- Option 0DC: DC to 13.5 GHz (mandatory)
- Option 010: 3.5 mm female connector on four ports on module
- Option 020: Type-N female connector on four ports on module

N4431D-xxx mixed-connector options

Connector Type	Port A Option	Port B Option	Port C Option	Port D Option
Four 3.5 mm (f)	010			
Four Type-N 50 Ω (f)	020			
3.5 mm (f)	101	201	301	401
3.5 mm (m)	102	202	302	402
Type-N 50 Ω (f)	103	203	303	403
Type-N 50 Ω (m)	104	204	304	404
7-16 (f) [1]	105	205	305	405
7-16 (m) [1]	106	206	306	406
4.3-10 (f) [2]	107	207	307	407
4.3-10 (m) [2]	108	208	308	408

1. Limits ECal module high frequency to 7.5 GHz.
2. Limits ECal module high frequency to 7.5 GHz.

N4432D Microwave ECal: DC or 300 kHz to 18 GHz, 4 ports. Includes:

- Option 0DC: DC to 18 GHz
- Option 003 300 kHz to 18 GHz
- Option 020: Type-N female connector on four ports on module

N4432D-xxx mixed-connector options

Connector Type	Port A Option	Port B Option	Port C Option	Port D Option
Four Type-N 50 Ω (f)	020			
3.5 mm (f)	101	201	301	401
3.5 mm (m)	102	202	302	402
Type-N 50 Ω (f)	103	203	303	403
Type-N 50 Ω (m)	104	204	304	404

N4690D Microwave ECal, DC or 300 kHz to 18 GHz, 2-ports. Includes:

- Option F0F: Both Type-N connectors are female
- Option M0F: One female and one male connector, both Type-N connectors
- Option M0M: Both Type-N connectors are male
- Option 0DC: DC to 18 GHz
- Option 003: 300 kHz to 18 GHz
- Option 00A adds:
  - 85054-60037 Type-N (f) to Type-N (f) adapter
  - 85054-60038 Type-N (m) to Type-N (m) adapter

N755xA Economy ECal, 2-ports. Includes:

- N7550A DC to 4 GHz, 2-ports
- N7551A DC to 6.5 GHz, 2-ports
- N7552A DC to 9 GHz, 2-ports
- N7553A DC to 14 GHz, 2-ports
- N7554A DC to 18 GHz, 2-ports
- Option NFF: Both Type-N connectors are female
- Option NMF: One female and one male connector, both Type-N
- Option NMM: Both Type-N connectors are male
- Option 150: Plastic storage box
- N7550X-152: Type-N torque wrench

Cables

- N6314A 50 Ω Type-N RF cable, DC to 12.4 GHz Includes:
  - 8120-8862 one 610 mm (24 in) cable with male connectors
- N6315A 50 Ω Type-N RF cable, DC to 12.4 GHz Includes:
  - 8121-0027 one 610 mm (24 in) cable with both female and male connectors

Adapter sets

- 11853A 50 Ω Type-N accessory kit. Includes:
  - 1250-1472 Type-N (f) to Type-N (f) adapter (two included)
  - 1250-1475 Type-N (m) to Type-N (m) adapter (two included)
  - 11511A Type-N (f) short
  - 11512A Type-N (m) short
- 11878A Type-N to 3.5 mm adapter kit. Includes:
  - 1250-1744 3.5 mm (f) to 50 Ω Type-N (m) adapter
  - 1250-1743 3.5 mm (m) to 50 Ω Type-N (m) adapter
  - 1250-1745 3.5 mm (f) to 50 Ω Type-N (f) adapter
  - 1250-1750 3.5 mm (m) to 50 Ω Type-N (f) adapter
- 11524A 7 mm to Type-N (f) adapter
- 11525A 7 mm to Type-N (m) adapter
- 85130C 3.5 mm to Type-N Includes:
  - 85054-60029 3.5 mm to Type-N (f)
  - 85054-60030 3.5 mm to Type-N (m)

For Devices with 7 mm Connectors

Mechanical calibration kits

85050B standard: DC to 18 GHz. Includes:

- 00909-60008 7 mm coax termination
- 85050-60006 7 mm fixed broadband load
- 85050-80007 7 mm short
- 85050-80010 7 mm open
- 85050-80011 7 mm sliding load

85050C precision TRL: DC to 18 GHz. Includes:

- 00909-60008 7 mm coax termination
- 85050-60003 7 mm to 7 mm airline
- 85050-60005 7 mm to 7 mm TRL adapter
- 85050-60006 7 mm fixed broadband load
- 85050-80008 7 mm short
- 85050-80009 7 mm short with collect
- 85050-80010 7 mm open

85050D economy: DC to 18 GHz. Includes:

- 85050-60006 7 mm fixed broadband load
- 85050-80007 7 mm short
- 85050-80010 7 mm open

Electronic calibration kits

85091D RF ECal, DC or 300 kHz to 9 GHz, 7 mm, 2-ports. Includes:

- Option 003: 300 kHz to 9 GHz
- Option 0DC: DC to 9 GHz

N4696D Microwave ECal, DC or 300 kHz to 18 GHz, 7 mm, 2-ports. Includes:

- Option 0DC: DC to 18 GHz
- Option 003: 300 kHz to 18 GHz

Cables

- 85132E single, flexible: 3.5 mm (f) [1] to 7 mm, 97.2 cm, 38.25 inches
- 85132F set, flexible: two 3.5 mm (f) [1] to 7 mm cables, 62.9 cm each, 24.75 inches each, p/n 85132-
- 60004
- 85135E single, flexible: 2.4 mm (f) to 7 mm, 96 cm, 38 inches
- 85135F set, flexible: two 2.4 mm (f) to 7 mm cables, 53 cm each, 21 inches each, p/n 85135-60002

1. Special rugged female connector specifically for connecting to the network analyzer test port but does not mate with a standard male connector.

For Devices with 4.3-10 Connectors

Electronic calibration kits

85094D RF ECal, DC or 300 kHz to 9 GHz, 4.3-10, 2-ports. Includes:

- Option 003: 300 kHz to 9 GHz
- Option 0DC: DC to 9 GHz
- Option 00A: Add two 4.3-10 adapters (one male-male, one female-female)
- Option 00F: Both 4.3-10 connectors are female on module
- Option 00M: Both 4.3-10 connectors are male on module
- Option M0F: One female and one male connector, both 4.3-10

85094D-xxx mixed-connector options

Port A Option			Port B Option		
Connector Type	Female	Connector Type	Female	Connector Type	Female
4.3-10	107	108	Type-N	203	204
			7-16	205	206
			3.5 mm	201	202

For Devices with 7-16 Connectors

Electronic calibration kits

85098D RF ECal, DC or 300 kHz to 7.5 GHz, 7-16, 2-ports. Includes:

- Option 003: 300 kHz to 7.5 GHz
- Option 0DC: DC to 7.5 GHz
- Option 00A: Add two 7-16 adapters (one male-male, one female-female)
- Option 00F: Both 7-16 connectors are female on module
- Option 00M: Both 7-16 connectors are male on module
- Option M0F: One female and one male connector, both 7-16

85098D-xxx mixed-connector options

Port A Option			Port B Option		
Connector Type	**Female**	**Male**	**Connector Type**	**Female**	**Male**
7-16	105	106	Type-N	203	204
			4.3-10	207	208
			3.5 mm	201	202

For Devices with Waveguide

Mechanical calibration kits

X-Band

X11644A standard, WR-90: 8.2 to 12.4 GHz. Includes:

- 00896-60008 X-band standard section
- 00910-60003 X-band termination
- 11644-20018 X-band short
- 11644-20021 X-band shim
- X281C adapter (included in calibration kit): WR-90 to 7 mm

P Band

P11644A standard, WR-62: 12.4 to 18 GHz. Includes:

- 00896-60007 P-band standard section
- 00910-60002 P-band termination
- 11644-20017 P-band short
- 11644-20020 P-band shim
- P281C adapter (included in calibration kit): WR-62 to 7 mm

K Band

K11644A standard, WR-42: 18 to 26.5 GHz. Includes:

- 00896-60006 K-band standard section
- 00910-60001 K-band termination
- 11644-20016 K-band short
- 11644-20019 K-band shim
- K281C adapter (included in calibration kit): WR-42 to 3.5 mm (f) Option 012 WR-42 to 3.5 mm (m)

R Band

R11644A standard, WR-28: 26.5 to 40 GHz. Includes:

- 00914-20028 R-band termination
- 11644-20005 R-band short
- 11644-20003 R-band shim
- 11644-60001 R-band 10 cm straight waveguide
- 11644-60016 R-band 5 cm straight waveguide

Q Band

Q11644A standard, WR-22: 33 to 50 GHz. Includes:

- 11644-60005 Q-band termination
- 11644-20004 Q-band short
- 11644-20001 Q-band shim
- 11644-60002 Q-band 10 cm straight waveguide
- 11644-60017 Q-band 5 cm straight waveguide

U Band

U11644A standard, WR-19: 40 to 60 GHz. Includes:

- 11644-60006 U-band termination
- 11644-20004 U-band short
- 11644-20002 U-band shim
- 11644-60003 U-band 10 cm straight waveguide
- 11644-60018 U-band 5 cm straight waveguide

Verification Kits

All Keysight verification kits include:

- Precision Z0 airline or match thru
- Mismatched airline or mismatch thru
- Fixed attenuators (except 85059V)
- Traceable measured data and uncertainties

85051B 45 MHz to 18 GHz 7 mm kit

Includes attenuators, airline, and mismatch airline with data on a USB drive for use in confirming calibrated system performance, traceable to national standards. Test procedure is provided in the service manual.

85053B 300 kHz to 26.5 GHz 3.5 mm kit

Includes attenuators, airline, and mismatch airline with data on a USB drive for use in confirming calibrated system performance, traceable to national standards. Test procedure is provided in the service manual.

85055A 300 kHz to 18 GHz Type-N kit

Includes attenuators, airline, and mismatch airline with data on a USB drive for use in confirming calibrated system performance, traceable to national standards. Test procedure is provided in the service manual.

85057B 45 MHz to 50 GHz 2.4 mm kit

Includes attenuators, airline, and mismatch airline with data on a USB drive for use in confirming calibrated system performance, traceable to national standards. Test procedure is provided in the service manual.

85058V 45 MHz to 67 GHz 1.85 mm kit

Includes attenuators, airline, and mismatch airline with data on a USB drive for use in confirming calibrated system performance, traceable to national standards. Test procedure is provided in the service manual.

CalPod Calibration Refresh Modules (8553xB/4xB)

CalPod calibration refresh modules allow in-situ calibration refreshes to be performed at the push of a button without removing the DUT or re-connecting calibration standards. CalPods are designed for any measurement situation where it is desirable to ensure that a valid calibration is present before recording measurement data. For example, they are useful for removing environmental effects such as cable movement and thermal-based changes of cables, connectors, and adapters, as well as connector and switch-matrix repeatability errors. The modules are especially useful in temperature, or thermal-vacuum chamber testing. CalPod modules are equipped with 2.92 mm connectors.

- 85530B 20 GHz ambient-temperature CalPod
- 85531B 20 GHz temperature-compensated CalPod
- 85532B 20 GHz thermal-vacuum compatible CalPod
- 85540B 40 GHz ambient-temperature CalPod
- 85541B 40 GHz temperature-compensated CalPod
- 85542B 40 GHz thermal-vacuum compatible CalPod
- 85523B CalPod controller (provides control for up to 4 CalPods)
- 85556A CalPod drive-cable splitter (allows control for up to 12 CalPods)
- 85554A CalPod drive cable extension (10-meter cascadable extension cable)

E5081A, E5080B and E5071C Comparison

Switching from the E5071C to the E5081A or E5080B simplifies complex measurements with integrated functionality and applications. You also get reliability and repeatability from best-in-class performance in dynamic range, trace noise, speed, and frequency range.

Features	E5081A ENA-X	E5080B ENA	E5071C ENA
Frequency range	10 MHz to 20/44 GHz (option 2x5, 2x6, 2N7, 4x5, 4x6, 4N7)	9 kHz to 4.5/6.5/9/14/18/20 GHz (option 2x0, 4x0, 4x2, without bias tees) 100 kHz to 26.5/32/44/53 GHz (option 2x0, 4x0, 4x2, without bias tees)	9 kHz to 4.5/6.5/8.5 GHz (Option 2x0, 4x0, without bias tees) 100 kHz to 4.5/6.5/8.5 GHz (Option 2x5, 4x5, with bias tees) 300 kHz to 14/20 GHz (with bias tees)
Test port connectors	3.5 mm (m) (20 GHz) 2.4 mm (m) (44 GHz)	Type-N (f) (4.5/6.5/8.5 GHz) 3.5 mm (m) (14/20 GHz)	Type-N (f) (4.5/6.5/8.5 GHz) 3.5 mm (m) (14/20 GHz)
High stability timebase	Optional (Option 1E5)	Optional (Option 1E5)	Optional (Option 1E5)
GPIB interface	Optional (Option 172)	Optional (Option 172)	Standard
Analog DC output (DC sources)	Optional (Option 175)	Optional (Option 175)	No
Internal bias tees	No	Optional (Option 120, 140. Up to 20 GHz)	Standard (Option 2x5, 4x5. Up to 20 GHz)
Data storage	Removable SSD (standard)	Removable SSD (standard)	Built-in HDD (standard. Option 019) Removable HDD (Option 017)
Pulse modulator hardware	Optional	Optional (Option 021/022)	No
Spectrum analysis hardware	Optional	Optional (Option 09x)	No
Internal second source	Optional (Option 4xx)	Optional (Option 4x2)	No
Configurable test set	Standard	No	No
Low noise receivers for noise figure measurements	Optional	No	No
Modulation distortion analysis (EVM, ACP)	S960704B, S960707B	No	No
Frequency offset mode / scalar calibrated mixer measurements	S96082B	S96082B	Option 008
Time domain analysis	S96010B	S96010B	Option 010
Enhanced time domain analysis with TDR	S96011B	S96011B	Option TDR

Confidently Covered by Keysight Services

Prevent delays caused by technical questions and reduce system downtime due to instrument maintenance and repairs with Keysight Services. Keysight Services are here to support your test needs with expert technical support, instrument repair and calibration, software support, training, alternative acquisition program options, and more.

A KeysightCare agreement provides dedicated, proactive support through a single point of contact for instruments, software, and solutions. KeysightCare covers an extensive group of instruments, application software, and solutions and ensures optimal uptime, faster response, faster access to experts, and faster resolution.

Keysight Services

Offering	Benefits
KeysightCare 	KeysightCare provides elevated support for Keysight instruments and software, with access to technical support experts that respond within a specified time and ensure committed repair and calibration turnaround times (TAT). KeysightCare offers multiple service agreement tiers, including KeysightCare Assured, Enhanced, and Application Software Support. See the KeysightCare data sheet for details.
KeysightCare Assured	KeysightCare Assured goes beyond basic warranty with repair services that include committed TAT and unlimited access to technical experts.
KeysightCare Enhanced	KeysightCare Enhanced includes all the benefits of KeysightCare Assured plus Keysight's accurate and reliable Calibration Services, accelerated, and committed TAT, and technical response.
Keysight Support Portal & Knowledge Center	All KeysightCare tiers include access to the Keysight Support Portal where you can manage support and service resources related to your assets such as service requests, and status, or browse the Knowledge Center.
Education Services	Build confidence and gain new skills to make accurate measurements, with flexible Education Services developed by Keysight experts. Including Start-up Assistance.
Alternative Acquisition Options	
KeysightAccess	Reduce budget challenges with a leased-based subscription service, that offers low monthly payments, enabling you to get the instruments, software, and technical support you want for your test needs.

Recommended services

Maximize your test system up-time by securing technical support, repair, and calibration services with committed response and turnaround times. 1-year KeysightCare Assured is included in every new instrument purchase. Obtain multi-year KeysightCare upfront to eliminate the need for lengthy and tedious paperwork and yearly requests for maintenance budget. Plus, you benefit from secured service for 2, 3, or 5 years.

Service	Function
KeysightCare Enhanced*	**Includes Tech Support, Warranty and Calibration**
R-55B-001-1	KeysightCare Enhanced – Upgrade 1 year
R-55B-001-2	KeysightCare Enhanced – Extend to 2 years
R-55B-001-3	KeysightCare Enhanced – Extend to 3 years (Recommended)
R-55B-001-5	KeysightCare Enhanced – Extend to 5 years (Recommended)
KeysightCare Assured	**Includes Tech Support and Warranty**
R-55A-001-2	KeysightCare Assured – Extend to 2 years
R-55A-001-3	KeysightCare Assured – Extend to 3 years
R-55A-001-5	KeysightCare Assured – Extend to 5 years
Start-Up Assistance	
PS-S40-01	Included – instrument fundamentals and operations starter
PS-S40-04	Recommended – instrument fundamentals and operations starter

* Available in select countries. For details, please view the datasheet. R-55B-001-2/3/5 must be ordered with R-55B-001-1.

Literature Information

Keysight E5080B ENA Series Vector Network Analyzer – Data Sheet, 5992-3843EN

Keysight E5081A ENA Series Vector Network Analyzer – Data Sheet, 3123-1369

Use the Right Vector Network Analyzer for the Job – Product Fact Sheet, 3121-1316

Drive Down the Cost of Test Using the ENA – Application Note, 5992-0195EN

5 Things the E5080B Can Do (That the E5071C Can't) – White Paper, 5992-4160EN

Keysight E5071C to E5080B Code Migration Guide, 5992-3873EN

Keysight Vector Network Analyzer – Selection Guide, 5989-7603EN

Electric Calibration (ECal) Modules – Technical Overview, 5963-3743E

Web Resources

ENA Series Vector Network Analyzer: www.keysight.com/find/ena

Keysight Vector Network Analyzers: www.keysight.com/find/na

Vector Network Analyzer Software: www.keysight.com/find/vnasoftware

Calibration Modules and Kits: www.keysight.com/find/ecal

Keysight enables innovators to push the boundaries of engineering by quickly solving design, emulation, and test challenges to create the best product experiences. Start your innovation journey at www.keysight.com.

KEYSIGHT

This information is subject to change without notice. © Keysight Technologies, 2018 – 2026, Published in USA, June 23, 2026, 5992-3842EN