M983xA and M980xA PXIe Vector Network Analyzer

Drive Down the Size of Test

Introduction

As the test margins for multiport devices become tighter, your test equipment needs to be one step ahead. Keysight's PXI Vector Network Analyzer (VNA) meets the most demanding multiport challenges with exceptional measurement performance and a fast cycle time so you can do more in less time. Gain deeper insights into your devices with the widest available portfolio of measurement applications for PXI VNAs, including spectrum analysis, Noise Figure (NF) measurements, Error Vector Magnitude (EVM) measurements, and more.

This configuration guide describes standard configurations, options, accessories, upgrade kits and compatible peripherals for the Keysight PXI VNAs.







KEYSIGHT

Table of Contents

PXI VNA Configurations 3
M980xA PXIe VNA Configurations 3
M983xA PXIe VNA Configurations 5
PXI VNA Accessories 6
PXI Chassis and Controllers 12
Measurement Application Software 16
Keysight Software Licensing Options Provide Flexibility and Support 36
Upgrade Your System 38
Multi-site Measurement Configurations 38
M983xA with Configurable Test Set 39
Measurement Accessories 41
System Requirements 60
Confidently Covered by Keysight Services 61
Literature Information 63
Web Resources 63

PXI VNA Configurations

This section describes standard configurations, options, accessories, upgrade kits and compatible peripherals for the Keysight PXI Vector Network Analyzer (VNA). All PXI VNA documentation is available on the product page at: www.keysight.com/find/pxivna.

M980xA PXIe VNA Configurations

Model Number	Description	Test Port Connectors
M9800A	9 kHz to 4.5 GHz, 2/4/6-port	3.5 mm (f)
M9801A	9 kHz to 6.5 GHz, 2/4/6-port	3.5 mm (f)
M9802A	9 kHz to 9 GHz, 2/4/6-port	3.5 mm (f)
M9803A	9 kHz to 14 GHz, 2/4/6-port	3.5 mm (f)
M9804A	9 kHz to 20 GHz, 2/4/6-port	3.5 mm (f)
M9805A	100 kHz to 26.5 GHz, 2-port	3.5 mm (f)
M9806A	100 kHz to 32 GHz, 2-port	2.4 mm (f)
M9807A	100 kHz to 44 GHz, 2-port	2.4 mm (f)
M9808A	100 kHz to 53 GHz [1], 2-port	1.85 mm (f)

1. Frequency is settable up to 54 GHz.

Test Set Options

Choose one of the frequency models, and one test set option for the M980xA Series. Option 200 indicates two test ports. Option 400 indicates four test ports. Option 600 indicates six test ports. To add options to a product, order the corresponding item number (M980xA-xxx).

Description	2-port	4-port	6-port	Additional Information
For M9800A to M9804A				
Option 200	X			1-slot module
Option 400		X		2-slot module
Option 600			X	2-slot module
For M9805A to M9808A				
Option 200	X			1-slot module



2-port M9804A with Option 200 (left), 4-port M9804A with Option 400 (center), and 6-port M9804A with Option 600 (right)

Hardware Options

Option Number	Description	Additional Information
Option 021	Pulse modulation hardware	This option enables the internal pulse modulator on the analyzer's source. S95025B application software is required for pulsed-RF measurements.
Option 090	Spectrum analysis hardware	S95090B application software is required for spectrum analysis.
Option 190	Vector signal analysis hardware	S95070B or S95090B application software and PathWave Vector Signal Analysis (89600 VSA) software are required for vector signal analysis using the M980xA Option 190. The maximum bandwidth is 29 MHz.

Calibration Options

Option Number	Description	Additional Information
Option 1A7	ISO 17025 compliant calibration	Provides a complete set of measurements which tests the unit to manufacturer's published specifications. Includes calibration label, ISO 17025 calibration certificate and data report, and measurement uncertainties and guardbands on all customer specifications. Conforms to ISO 17025 and ISO 9001.
Option A6J	ANSI Z540 compliant calibration	Provides a complete set of measurements which tests the unit to manufacturer's published specifications. Includes pre- and post-adjustment data and measurement uncertainty information compliant with the ANSI/NCSL Z540 standard.

M983xA PXIe VNA Configurations

Model Number	Description	Test Port Connectors
M9834A	10 MHz to 20 GHz, 2-port	3.5 mm (f)
M9837A	10 MHz to 44 GHz, 2-port	2.4 mm (f)

Test Set Options

Choose one of the frequency models, and one test set option for the M983xA Series. Option 205 indicates two test ports with configurable test set. Option 270/271 adds a built-in upconverter for modulation distortion analysis such as EVM or ACP. To add options to a product, order the corresponding item number (M983xA-xxx).

Description	Base Option	Add Upconverter for Modulation Distortion	Slot Count	Additional Information
For M9834A				
Option 205	X		2	
Option 270		X	3	
For M9837A				
Option 205	X		3	
Option 270		X	3	
Option 271 [1]		X	3	

1. Option 271 is a bandwidth limited version of Option 270. See Table 55 of the M983xA Data Sheet for more details.



M9834A with Option 205 (left), M9834A with Option 270 (center), and M9837A with Option 270 (right)

Hardware Options

Option Number	Description	Additional Information
Option 021	Pulse modulation hardware	This option enables the internal pulse modulator on the analyzer's source. S95025B application software is required for pulsed-RF measurements.
Option 029	Noise receiver for all ports	This option adds low-noise receivers to M983xA's port 1 and 2 to provide wideband noise figure and noise-power measurements. S95029B application software is needed to control the low-noise receivers.
Option 190	Spectrum analysis and modulation distortion hardware	S95070B or S95090B application software and PathWave Vector Signal Analysis (89600 VSA) software are required for vector signal analysis using the M983xA Option 190.

Calibration Options

Option Number	Description	Additional Information
Option 1A7	ISO 17025 compliant calibration	Provides a complete set of measurements which tests the unit to manufacturer's published specifications. Includes calibration label, ISO 17025 calibration certificate and data report, and measurement uncertainties and guardbands on all customer specifications. Conforms to ISO 17025 and ISO 9001.

PXI VNA Accessories

Additional PXI Modules

Model Number	Description	Additional Information
M9155C [1, 2]	PXI dual SPDT switch module, DC to 26.5 GHz, unterminated	
M9155CH40 [1, 2]	PXI dual SPDT switch module, DC to 40 GHz, unterminated	
M9156C [1, 2, 3]	PXI dual transfer switch module, DC to 26.5 GHz	
M9156CH40 [1, 2]	PXI dual transfer switch module, DC to 40 GHz	
M9157C [1, 2]	PXI single SP6T switch module, DC to 26.5 GHz	
M9157CH40 [1, 2]	PXI single SP6T switch module, DC to 40 GHz	
M9161D [1, 2]	PXI solid state dual SP4T switch module, 50 MHz to 20 GHz	
M9164A [1]	PXI solid-state switch matrix module, 2x16 full crossbar, 300 kHz to 6.5 GHz	S95553B application software is required for multiport calibrated measurements. [3]
M9164B [1]	PXI solid-state switch matrix module, 2x16 full crossbar, 300 kHz to 9 GHz	

Model Number	Description	Additional Information
M9165A [1]	PXI solid-state switch matrix module, 2x8 full crossbar, 300 kHz to 6.5 GHz	
M9165B [1]	PXI solid-state switch matrix module, 2x8 full crossbar, 300 kHz to 9 GHz	
M9379A [4]	RF amp module, 50 MHz to 13.5 GHz	Includes two amplifiers, RF switches, and a programmable step attenuator designed to operate with the M980xA. When used as an external preamp, the M9379A improves the M980xA's noise floor for noise figure measurements up to 13.5 GHz.
M9341A [5]	Digital I/O	Includes a 24-bit digital I/O connector and triggering ports to provide communication signals between the PXI VNA and an external handler.
M9341B [5]	Digital I/O and analog I/O	Includes a 24-bit digital I/O and an 8-bit digital I/O to allow users to control the device under test (DUT) directly with serial or parallel digital signals. The M9341B has four analog input connectors to allow sensing of DC voltages from the DUT. The measured DC voltage can be displayed on the firmware. The M9341B also supports two variable DC source outputs to control the DUT, while the DC source current can be monitored during measurements.
M9111A	PXIe high-speed Source/Measure Unit (SMU), 13 V, ± 1 A or 6 V, ± 3 A, 18 W	
M9614A	PXIe 5-channel Source/Measure Unit (SMU), 500 kSa/s, 100 pA, 30 V, 500 mA	
M9615A	PXIe 5-channel precision Source/Measure Unit (SMU), 500 kSa/s, 10 pA, 30 V, 500 mA	

1. PXI switch modules are directly controlled by the PXI VNA firmware.
2. Can be used as an RF source switch to isolate the M980xA's source signal during noise figure measurements.
3. Multiport calibrated measurements with 18 GHz M9164C or M9165C switch matrix are supported but the maximum frequency is limited at 9 GHz.
4. For more information on the M9379A, see the data sheet (5992-1795EN).
5. For more information on the M9341A/B, see the data sheet (5992-1856EN).

Interconnect Cables for Multiport Configurations

Description	For M980xA	For M983xA	Additional Information
Interconnect cables for multiport configuration of PXI VNA	Y1730A	Y1730A	
Interconnect cables for multiport configuration of 1-slot M980xA (Opt.200) [1]	Y1730A -001	N/A	Includes one semi-rigid cable and one flexible control cable (P/N: M9800-61601, 150 mm) for connecting two 1-slot M980xAs (Option 200).
Interconnect cables for multiport configuration of 2-slot M980xA (Opt.400 or 600) [1]	Y1730A -002	N/A	Includes two semi-rigid cables (P/N: M9800-61602, M9800-61603) and one flexible control cable (P/N:

Description	For M980xA	For M983xA	Additional Information
			M9800-61601, 150 mm) for connecting M980xA (Option 200/400/600) to an adjacent M980xA (Option 400/600).
Interconnect cables for multiport configuration of M980xA with multiple PXI chassis	Y1730A -003	N/A	Includes one semi-rigid cable and one flexible control cable for connecting two M980xAs inside the two PXI chassis. Includes 1 set of spacers between two chassis.
Interconnect cables for multiport configuration of M980xA [2]	Y1730A -004	N/A	Includes semi-rigid cables required to configure a multiport VNA with 8 or more M980xA modules (with a maximum frequency of 20 GHz or less), or 10 or more M980xA modules (with a maximum frequency above 20 GHz).
Interconnect cables for multiport configuration of M983xA and M980xA with greater than 7 modules	Y1730A -005	Y1730A -005	
Interconnect cables for multiport configuration of 2-slot M983xA with power divider [2]	N/A	Y1730A -006	Includes two semi-rigid cables (P/N: M9830A-61621 and M9830-61623) for connecting a 2-slot M983xA (M9834A-205) to a 11636B power divider.
Interconnect cables for multiport configuration of 3-slot M983xA with power divider [2]	N/A	Y1730A -007	Includes two semi-rigid cables (P/N: M9830A-61621 and M9830-61622) for connecting a 3-slot M983xA (M9834A-270, M9837A-205/270/271) to a 11636B power divider.
Interconnect cables for multiport configuration of 2-slot M983xA with M980xA [1]	Y1730A -200	Y1730A -200	Includes one semi-rigid cable (P/N: M9830-61609) and one flexible control cable (P/N: M9800-61616, 300 mm) for connecting a 2-slot M983xA (M9834A-205) to an adjacent M980xA (Option 200/400/600).
Interconnect cables for multiport configuration of 3-slot M983xA with M980xA [1]	Y1730A -201	Y1730A -201	Includes one semi-rigid cable (P/N: M9830-61607) and one flexible control cable (P/N: M9800-61616, 300 mm) for connecting a 3-slot M983xA (M9834A-270, M9837A-205/270/271) to an adjacent M980xA (Option 200/400/600).
Interconnect cables for multiport configuration of Two 2-slot M983xAs [1]	N/A	Y1730A -300	Includes one semi-rigid cable (P/N: M9830-61608) and one flexible control cable (P/N: M9800-61616, 300 mm) for connecting two 2-slot M983xAs.
Interconnect cables for multiport configuration of Two 3-slot M983xAs [1]	N/A	Y1730A -301	Includes one semi-rigid cable (P/N: M9830-61606) and one flexible control cable (P/N: M9800-61616, 300 mm) for connecting two 3-slot M983xAs.
Interconnect cables for multiport configuration of 3-slot M983xA with M9410A VXT	N/A	Y1730A -302	Includes one flexible cable (P/N: M9410-60009), one flexible cable (P/N: 5012-9084), and one semi-rigid cable (P/N: M9830-61610) for connecting M9300A frequency reference, M9410A VXT and 3-slot M983xA for modulation distortion analysis with S95070B. This kit cannot be used for connections involving 3-slot M9411A VXT.
Cable Assembly, 3.5 mm (m) to 3.5 mm (m), 26.5 GHz, 5 m	Y1730A -500	N/A	Includes a 5-m, 3.5 mm (male) to 3.5 mm (male), 26.5 GHz RF cable which can be used for connecting the LOs in a distributed VNA system [3].
Control cable, 5 m	Y1730A -510	N/A	Includes a 5-m control cable for connecting two distributed VNAs [3].
PCIe Gen4 x4 CMI copper cable, 5 m	Y1730A -520	N/A	Includes a 5-m PCIe Gen4 cable for connecting two distributed VNAs [3].

Description	For M980xA	For M983xA	Additional Information
SMB (f) to MCX (m) cable assembly, 300 mm	Y1730A -800	Y1730A -800	For connection with external reference ports (Ref In/Ref Out) of the PXI VNA.
SMB (f) to MCX (m) cable assembly, 1000 mm	Y1730A -801	Y1730A -801	For connection with external reference ports (Ref In/Ref Out) of the PXI VNA.
BNC (f) to MCX (m) cable assembly, 320 mm	Y1730A -810	Y1730A -810	For connection with external reference ports (Ref In/Ref Out) of the PXI VNA.

1. Add one interconnect cable kit for each additional PXI VNA module.
2. Additional power divider(s) is necessary to distribute LO signal among PXI modules in multiport configurations. For more detail of multi-module configurations, refer to M98xxA multi-module installation guide.
3. S95551B and S95571B software are needed for distributed VNA measurements. Distributed VNA measurements are not supported on the M983xA.

Interconnect cable list for multiport configurations using M980xA and M983xA

Left Module	Right Module			
--	**2-port M980xA (M980xA-200)**	**4/6-port M980xA (M980xA-400/600)**	**2-slot M983xA (M9834A-205)**	**3-slot M983xA (M9834A-270, M9837A-2xx)**
2-port M980xA (M980xA-200)	Y1730A-001	Y1730A-001	N/A	N/A
4/6-port M980xA (M980xA-400 or 600)	Y1730A-002	Y1730A-002	N/A	N/A
2-slot M983xA (M9834A-205)	Y1730A-200	Y1730A-200	Y1730A-300	N/A
3-slot M983xA (M9834A-270, M9837A-2xx)	Y1730A-201	Y1730A-201	N/A	Y1730A-301
M9300A + 2-slot VXT (M9410A)	N/A	N/A	N/A	Y1730A-302



Connecting 2-slot M9804As (M9804A-600) using Y1730A Option 002



Connecting 2-slot M9834A and M980xA using Y1730A Option 200 (left), and connecting two 2-slot M9834As using Y1730A Option 300 (right)

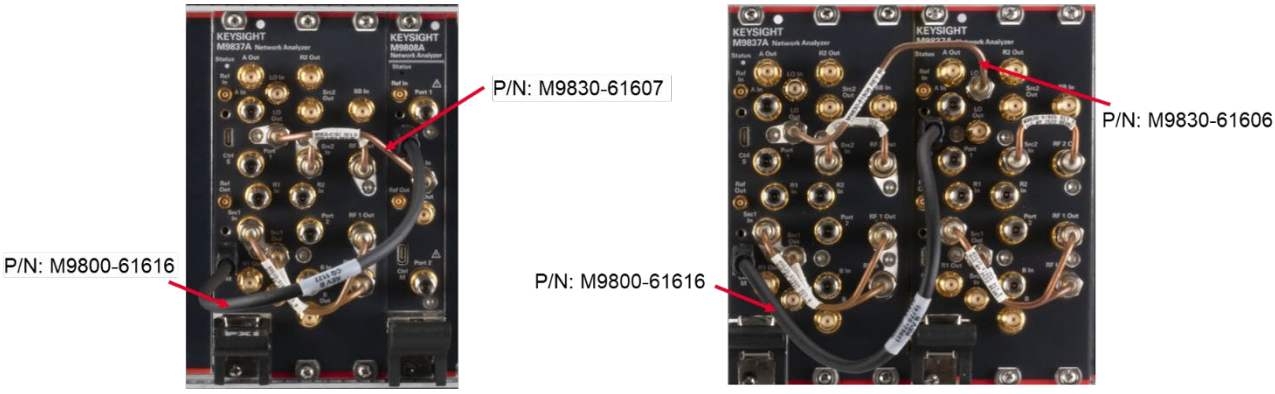

Connecting 3-slot M983xA and M980xA using Y1730A Option 201 (left), and connecting two 3-slot M983xAs using Y1730A Option 301 (right)

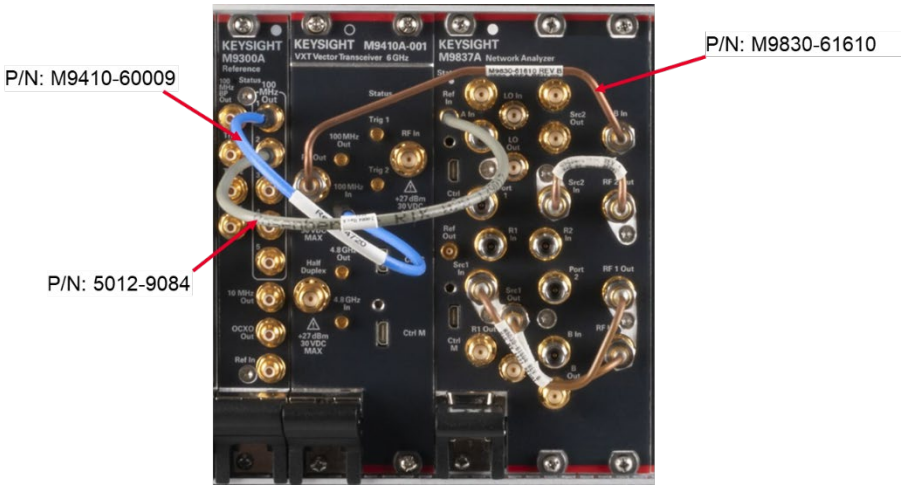

Connecting M9300A, M9410A and 3-slot M983xA using Y1730A Option 302

Test Cables

Option Number	Description	Additional Information
Y1740A-100	Cable Assembly, 3.5 mm (m) to 3.5 mm (m), 26.5 GHz, 36 inches	
Y1740A-200	Cable Assembly, 2.92 mm (m) to 2.92 mm (m), 40 GHz, 36 inches	
Y1740A-300	Cable Assembly, 2.4 mm (m) to 2.4 mm (m), 50 GHz, 36 inches	
Y1740A-310	Cable Assembly, 2.4 mm (m) to 2.92 mm (m), 40 GHz, 36 inches	
Y1740A-400	Cable Assembly, 1.85 mm (m) to 1.85 mm (m), 67 GHz, 1 m	



Cable assembly with 2.4-mm male connectors (Y1740A Option 300)

Other Accessories

Model / Option Number	Description	Additional Information
Y1731A	PXI adapter module	
Y1731A-001	I/O adapter module	Includes a PXI module equipped with twelve SMB connectors to support coaxial control-signal connections for the PXI VNA. Also includes two flexible control cables (500 mm and 175 mm) for connecting to the PXI VNAs' control port.
Y1731A-800	BNC (m) to SMB (f) cable assembly, 1000 mm	For connection with BNC connectors on external peripherals (e.g., pulse generators)
U7227A/U7228A [1]	USB preamplifier, 10 MHz to 4 GHz	
U7227C/U7228C [1]	USB preamplifier, 100 MHz to 26.5 GHz	
U7227F/U7228F [1]	USB preamplifier, 2 GHz to 50 GHz	

1. Can be used as an external preamp for noise figure measurements using M980xA's standard receivers. For more information on the U722x USB preamplifiers, see the technical overview (5991-4246EN).



Y1731A Option 001 (left), connecting Y1731A and M9804A (right)

PXI Chassis and Controllers

Select Chassis and Accessories

Step 1. Select a chassis [1]

Model Number	Description	Additional Information
M9010A	10-slot PXIe chassis. Gen 3, 24 GB/s	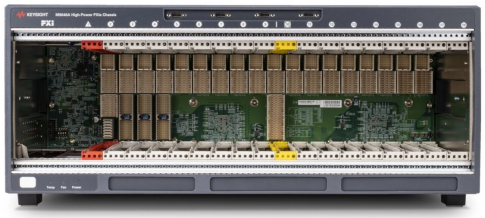
M9019A	18-slot PXIe chassis. Gen 3, 24 GB/s	
M9046A	18-slot PXIe chassis. Gen 3, high power, 24 GB/s	

1. Refer to the M90xx PXIe Chassis Power Calculator to select the right PXI chassis depending on required DC output power.

Step 2. Choose sufficient number of slot blocker kits and non-EMC filler panels to fill every open slot. This step is recommended to achieve data sheet specifications.

Model Number	Description	Additional Information
Y1275A	Slot blocker kit: 5 slots	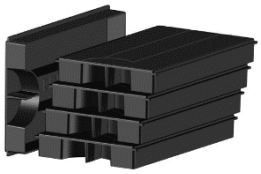

Y1213A	PXI non-EMC filler panel kit: 5 slots [1]	

1. Non-EMC filler panels are included with the M9010A, M9019A or M9046A PXIe chassis.

Step 3. Choose a rack mount kit (optional) [1]

Model Number	Description	Additional Information
Y1271A	Rack mount kit for M9010A and Y1217A rail kit	
Y1215C	M9019A flush mount adapter kit	
Y1216B	M9019A recess mount adapter kit	
Y1257A	M9046A rackmount kit	
Y1258A	M9046A recess rackmount kit	

1. For more information on the rack mount kit, see the chassis data sheets.

Step 4. If using M9019A, order an air inlet kit (optional). This step is recommended for rack mounted systems with less than 1U space below M9019A chassis. [1]

Option Number	Description	Additional Information
Y1214B	M9019A air inlet kit	

1. Refer to PXI Chassis Cooling Capacity Guidelines for more detail.

Step 5. If using M9046A, order an advanced cooling spacer kit (optional). This step is recommended to allow optimal cooling in high power applications. [1]

Option Number	Description	Additional Information
Y1259A	M9046A advanced cooling spacer kit	

1. Refer to PXI Chassis Cooling Capacity Guidelines for more detail.

Select Controller (Either Embedded or External Controller)
If using Embedded Controller

Step 1. Select embedded controller [1]

Model Number	Description	Additional Information
M9035A	PXIe Embedded Controller: Intel i3, 16 GB RAM, 256 GB SSD	
M9038A	PXIe Embedded Controller: Intel i7, 32 GB RAM, 512 GB SSD	On the M9038A, Select 64 GB memory for the best performance with VNA applications.

1. The chassis includes empty space to the left of the 1st functional slot. The embedded controller occupies that empty space and the 1st functional slot.

Step 2. Upgrade from standard memory size (optional)

For M9035A

Option Number	Description	Additional Information
M9035A-M16	Memory, 16 GB	
M9035A-M32	Memory, 32 GB	

For M9038A

Option Number	Description	Additional Information
M9038A-M64	Memory upgrade to 64 GB	

Step 3. Select an operating system

Option Number	Description	Additional Information
M9035A-W16 or M9038A-W16	Windows 10 IoT Enterprise LTSB (64-bit)	
M9035A-W11 or M9038A-W11	Windows 11 IoT Enterprise LTSC (64-bit)	

If using External Controller [1, 2]

Step 1. Select host adapter

Model Number [3]	Description	Additional Information
M9048B	PCIe Host Adapter: Single Port (x8), Gen 3	

M9049A	PCIe Host Adapter: Single Port (x16), Gen 3	

Step 2. Select PCIe cable

Model Number [3]	Description	Additional Information
Y1202A	PCIe cable	

Step 3. Select system module

Model Number [3]	Description	Additional Information
M9022A	PXIe System Module: Single Port (x8), Gen 3	
M9023A	PXIe System Module: Single Port (x16), Gen 3	
M9024A	PXIe System Module with Connectivity Expansion: Dual Port (x16) Gen 3	

1. For list of qualified external controllers, please see Test Computer List Technical Note (5990-7632EN).
2. Review Diagnose and Resolve PXIe and AXIe Chassis Communication Problems for diagnostic procedures on chassis communication issues.
3. For more detailed chassis configuration information including multi-chassis, see Interface Modules and Adapters for PXIe and AXIe Systems (5992-0377EN).

Measurement Application Software

Description [1, 2]	For M980xA	For M983xA	Additional Information
Automatic fixture removal	S95007B	S95007B	
Probe and fixture leakage calibration	S95008B	S95008B	
Time domain analysis	S95010B	S95010B	
Enhanced time domain analysis with TDR	S95011B	S95011B	Includes all capabilities of S95010B.
Real-time S-parameter and power measurement uncertainty	S95015B	S95015B	Displays the measurement uncertainty dynamically (real-time) on the measurement trace.
Basic pulsed-RF measurements lite	S95024B	S95024B	Requires hardware Option 021. Subset of S95025B.
Basic pulsed-RF measurements	S95025B	S95025B	Requires hardware Option 021.
Mechanical noise tuner control	N/A	S95027B	Provides ability to control Maury Microwave's LXI or Focus Microwaves' CCMT impedance tuners. Requires M983xA Option 029 and application software S95029B.
Noise figure measurements with vector correction [4]	S95029B	S95029B	Standard receivers are used on M980xA. Option 029 is required to enable high gain setting on M983xA.
IQ data bandwidth up to 1.5 GHz	N/A	S95050B	Requires M983xA option 190 and either S95070B modulation distortion or S95090B spectrum analysis application.
IQ data bandwidth up to 4 GHz	N/A	S95051B	Requires M983xA option 190 and either S95070B modulation distortion or S95090B spectrum analysis application.
Modulation distortion [4]	S95070B	S95070B	Requires hardware option 090 or 190 on M980xA, option 190 on M983xA. Requires S95083B for frequency converter measurements.
Scalar mixer/converter measurements [4]	S95082B	S95082B	Provides SMC measurement class.
Vector and scalar mixer/converter measurements [4]	S95083B	S95083B	Provides SMC + phase measurement class and vector mixer characterization.
Embedded-LO capability [4]	S95084B	S95084B	
Gain-compression measurements [4]	S95086B	S95086B	
Intermodulation distortion measurements [4, 5]	S95087B	S95087B	Requires multiple module measurements with S95551B.
Source phase control	S95088B	S95088B	Requires multiple module measurements with S95551B.
Differential and I/Q device measurements [4]	S95089B	S95089B	
Spectrum analysis [4]	S95090B	S95090B	Requires hardware option 090 or 190 on M980xA, Option 190 on M983xA.
Active hot parameters, restricted to 50 GHz	S95111B	S95111B	Requires multiple module measurements with S95551B.

Description [1, 2]	For M980xA	For M983xA	Additional Information
True-mode stimulus	S95460B	S95460B	Requires multiple module measurements with S95551B.
Multiple instruments/modules measurements [6, 7]	S95551B	S95551B	Provides multiport calibrated measurements using multiple PXI modules.
Multiport calibration assistant	S95552B	S95552B	Provides a tool to flexibly define cal sets of multiport measurements. Requires one ECal module.
Multiport calibrated measurements with switch instruments	S95553B	S95553B	Provides multiport calibrated measurements using M916x PXI Solid-State Switch matrix.[8]
Banded millimeter-wave network analysis	S95560B	N/A	Enables the operation with frequency extenders using M980xA.
Distributed VNA measurements	S95571B	N/A	Requires two or more M980xA modules and S95551B software.
Vector network analyzer (VNA) simulator – Standard	S94050B	S94050B	Runs on your PC and simulates standard S-parameter measurement class of Keysight's VNAs.
Vector network analyzer (VNA) simulator - Advanced	S94051B	S94051B	Runs on your PC and simulates VNA functions including advanced features of S95xxxB software [5].
Wideband active load control for modulation distortion	N/A	S94572B	Adds active modulated wideband load pull to modulation distortion application. Requires hardware Option 190 on M983xA, and S95070B modulation distortion.
Wideband active load control for modulation distortion, for export-controlled countries	N/A	S94573B	Adds active modulated wideband load pull to modulation distortion application. Requires hardware Option 190 on M983xA, and S95070B modulation distortion. The functions are limited to 50 GHz.
Device measurement expert (DMX)	S94601B	S94601B	Assists the users in setting up measurements automatically with customizable templates.
Limit assistant	S94602B	S94602B	Allows to acquire the data from the VNA and easily generate limit masks for production tests.
Automated measurement expert (AMX)	S94701A, S94702A, KS8400A	S94701A, S94702A, KS8400A	A smart software solution for automated multiport S-parameter measurements with the PXI VNAs. Order each software model and install in a PC or PXI embedded controller.
DisplayPort DP cable compliance test software [10, 11]	S94DPPCB	S94DPPCB	Performs automated compliance tests of DisplayPort cable assemblies using 4-port VNA.
USB Type-C interconnects compliance test software [10, 11]	S94USBCB	S94USBCB [12]	Performs automated compliance tests of USB Type-C interconnects (e.g., cable assemblies, connectors, or raw cables) using 4-port VNA.

1. The S95xxxB software has six license types, please refer to "Keysight Software Licensing Options Provide Flexibility and Support" for more detail.
2. All license options have to be ordered as separate items and installed in a PC or PXI embedded controller.
3. See the S95070B description in "Measurement Application Software" for the supported signal generators.
4. Provides Frequency Offset Mode (FOM) to independently set the frequency of internal source and receivers, and to configure external sources using External Device Configuration.
5. The most common method to use S95087B is to use a single VNA with two PXI VNA modules, with each built-in source generating one tone. An external combiner (for example, hybrid power dividers 87302C, 87303C, or 87304C) is required to combine the tones.
6. When configuring a multiport VNA using multiple PXI VNA modules, Y1730A is recommended for each additional multiport interconnection.
7. A 4-port ECal module (e.g., N4431/32/33D) is recommended for multiport measurements (n > 4).
8. Only the 4-port ECal modules (e.g., N4431/32/33D) are supported for calibration with S95553B.
9. Features of S95007B, S95552B and S95553B are not supported with the S94051B.

10.Requires S95011B, KS8400B PathWave Test Automation, and KS8104B HTML5 Result Listener Plugin.
11.Supports L8990M-0LZ 20-port switch matrix to configure a multiport test system which eliminates the need for reconnections of test cables with DUT.
12.M983xA PXI VNA is not recommended for USB Type-C low-speed signal test which requires measurements from 300 kHz.

Automatic Fixture Removal (S95007B)

Many devices do not have coaxial connectors and are put in fixtures in order to measure them in a coaxial environment. Accurately removing the effects of the fixture is required to get a good measurement of the Device Under Test (DUT). This application adds a powerful application wizard to guide you through characterizing a fixture and removing it from the measurement. Devices can be single-ended or differential. Files can be saved in a variety of formats for later use in ENA, PNA, PXI VNA, Streamline Series VNA, ADS, and PLTS.

Probe and Fixture Leakage Calibration (S95008B)

The software provides a process designed to address and correct crosstalk and leakage errors within the measurement system. As measurement systems operate at high frequencies, the potential for crosstalk increases, impacting the accuracy of measurements. With on-wafer measurement setups, probes and components are placed very close to each other, resulting in crosstalk through physical coupling. Additionally, modern DUTs often have more than two ports, leading to more complex crosstalk scenarios within the measurement setup.

Addressing these challenges requires advanced calibration techniques and models that can accurately account for and mitigate crosstalk, ensuring reliable and precise measurement results. The application maintains the integrity of high-frequency testing and supports the development of next-generation technologies.

Time Domain Analysis (S95010B)

This application enables the analyzer to view reflection and transmission responses in time or distance. Use time domain to tune filters, gate out the response of fixtures and cables, characterize the impedance of transmission lines and more.

Enhanced Time Domain Analysis with TDR (S95011B)

This application enables the analyzer to perform enhanced time domain analysis for high-speed data applications. All functionalities of the S95010B are included (TDR/TDT mode). In addition, the S95011B enables more detailed measurements and evaluations, such as eye-diagram/mask modes, without adding PLTS software. Jitters and/or emphasis/equalization capabilities enables simulation of real-world signals and environment. S95011B covers up to 53 GHz bandwidth with 8.42 psec rise time. Full calibration is available and the automatic deskew ensures easy removal of fixture and probe effects. To get the best accuracy, mechanical calibration kits or ECal with DC option (e.g., N443xD or N469xD with Option 0DC) are recommended.

When the PXI VNA is launched as a multiport VNA using multiple VNA modules with the S95551B, the number of test ports can be increased for this application.

S95011B supports maximum 24-port measurements for multiport DUT topologies, such as six differential 2-port DUTs or 24x single-ended 1-port DUTs.

Real Time S-parameter and Power Measurement Uncertainty (S95015B)

This application provides uncertainties for both S-parameter and power measurements on the PXI VNA. The real-time display of the uncertainty associated with power and S-parameter traces increases the confidence in the reproducibility of measurements. This allows users to implement pass/fail tests easily because now the instrument quantifies the gray region that is in between a full pass or a full fail, apply more realistic limit lines which can increase the production yield and reduce the defect percentage on the finished products. This application easily establishes a metric to quantify the quality of the measurement process, so your company's quality control procedures are simplified. It includes the uncertainty information for most Keysight calibration kits and provides national metrology institute traceability through Keysight's calibration kits. This application also helps you to include uncertainty information for your product's specifications and data sheets.

Multi-site measurement configurations are not supported with the S95015B.

Basic Pulsed-RF Measurements Lite (S95024B)

This application enables internal pulse generators that can be used to control the internal pulse modulators, and it provides an integrated pulse application that uses the wideband-detection method. The software requires hardware Option 021 pulse modulator hardware.

S95024B provides an easy way to set up point-in-pulse measurements with pulse width as narrow as 50 µs, and pulse-profile measurements with 1 us minimum timing resolution. Using the built-in pulse modulators, the PXI VNA is a complete pulsed-RF measurement solution, eliminating the need for external test sets and pulse generators. S95024B also controls external pulse generators and modulators and can synchronize to external master pulses. Y1731A PXI Adapter Module is recommended to access pulse signals with SMB connectors if using external master pulses or external pulse modulators.

S95024B is a subset of S95025B, so they should not be installed together.

Basic Pulsed-RF Measurements (S95025B)

This application enables internal pulse generators that can be used to control the internal pulse modulators, and it provides an integrated pulse application that uses the wideband-detection method. The software requires hardware Option 021 pulse modulator hardware.

S95025B extends the capabilities of S95024B and provides an easy way to set up point-in-pulse measurements with pulse width as narrow as 200 ns, and pulse-profile measurements with 40 ns minimum timing resolution. Using the built-in pulse modulators with pulse width as narrow as 1 µs, the PXI VNA is a complete pulsed-RF measurement solution, eliminating the need for external test sets and pulse generators. Examples of pulse modulation shapes with 1 us and 100 us pulse width using the internal pulse modulators are included in M980xA data sheet (5992-3596EN) or M983xA data sheet (3122-2129.EN). S95025B also controls external pulse generators and modulators and can synchronize to external master pulses. Y1731A PXI Adapter Module is recommended to access pulse signals with SMB connectors if using external master pulses or external pulse modulators.

Add Mechanical Noise Tuner Control for Noise Figure/Parameter Measurements (S95027B)

Noise figure measurements using application software S95029B utilize an ECal module as an impedance tuner to provide source- corrected noise figure and noise parameter measurements of nominally matched devices, with gamma-opts < 0.3. To measure noise parameters of unmatched devices with higher gamma- opts, an external tuner is needed. This application software enables control of Maury Microwave LXI tuners or Focus Microwaves' CCMT tuners in place of an ECal module, extending noise parameter measurements to devices with gamma-opts < 0.9. Requires application software S95029B. Refer to Maury Microwave's or Focus Microwaves' websites for more information about compatible tuners.

Noise Figure Measurements with Vector Correction (S95029B) using M980xA

This software application enables high-accuracy noise figure and noise-power measurements of amplifiers, frequency converters, and mixers, utilizing Keysight's unique vector-source-correction technique that uses Keysight N469xD series ECal module as a source-impedance tuner to remove the effects of imperfect system-source match. This approach yields accuracy that surpasses that provided by the Y-factor method and other cold-source implementations, especially for in-fixture, on-wafer, and automated-test environments. S95029B controls N469xD Series ECal modules configured as impedance tuners for use with the M980xA.

A scalar-calibrated method is also available that offers less accuracy but is faster and does not require an impedance tuner. This method requires an external switch to isolate the M980xA's source signal during noise figure measurements. A 50-ohm load must be connected to the DUT's input using the external switch.

With the M980xA, the instrument's standard receivers are used for noise figure measurements with the S95029B. An external preamplifier, filter(s) and switches are required for devices with < 30 dB of excess noise (gain plus noise figure in dB) [1]. Typical block diagrams of scalar-corrected (left) and vector-corrected (right) noise figure measurements with M980xA are shown.

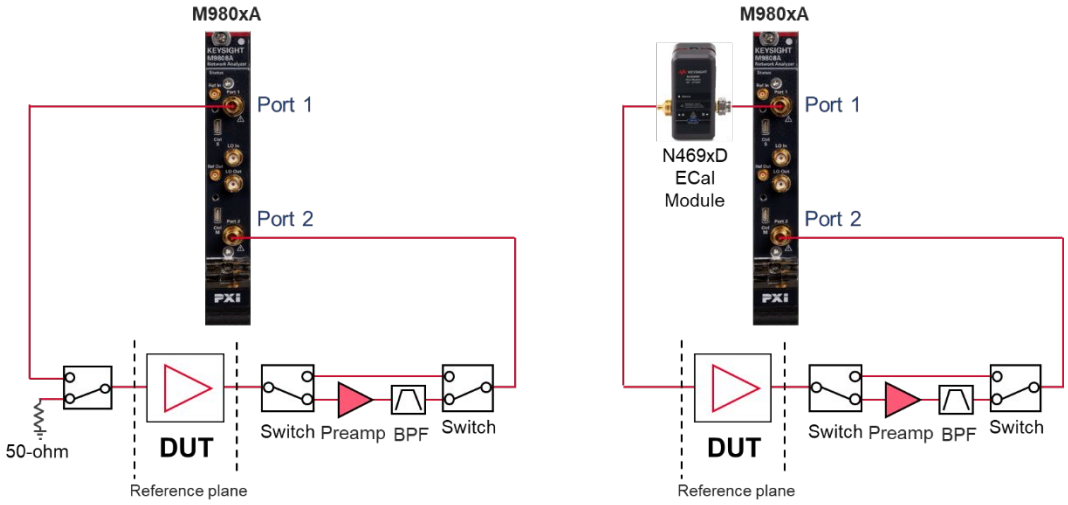

For calibration, a standard mechanical cal kit or ECal module is required for the S-parameter portion of the cal (an ECal used as a tuner cannot be shared for calibration). To calibrate a standard receiver for noise figure measurements, a power meter/sensor is required. A 346-serires noise source (Keysight 346C or 346C-K01 recommended) can be used for noise calibration of the instrument's receiver, when a preamplifier is located before the receiver. All calibration accessories and external hardware must be ordered separately.

Noise figure measurements with the M980xA are not supported below 50 MHz or above 45 GHz.

1. The M9379A RF Amplifier Module includes internal amplifiers and switches, enabling synchronized fast tests for both S-parameters and noise figure measurements up to 13.5 GHz using the M980xA's standard receiver. See the data sheet, literature number 5992-1795EN for more detail.

Noise Figure Measurements with Vector Correction (S95029B) using M983xA

This software application enables high-accuracy noise figure and noise-power measurements of amplifiers, frequency converters, and mixers, utilizing Keysight's unique vector-source-correction technique that uses Keysight N469xD series ECal module as a source-impedance tuner to remove the effects of imperfect system-source match. This approach yields accuracy that surpasses that provided by the Y-factor method and other cold-source implementations, especially for in-fixture, on-wafer, and automated-test environments. S95029B controls N469xD Series ECal modules configured as impedance tuners for use with the M983xA.

A scalar-calibrated method is also available that offers less accuracy but is faster and does not require an impedance tuner. Unlike M980xA, M983xA does not require an external switch to isolate the source signal during noise figure measurements.

The S95029B software is required for all noise figure measurements on the M983xA. The software option includes both scalar- and vector-corrected noise figure measurements.

If hardware Option 029 is not ordered, then only the low and medium receiver gain settings are available for noise figure measurements. These settings are suitable for devices with gain + noise figure is > 30 dB.

If hardware Option 029 is ordered, in addition to the low and medium gain settings, the high gain setting is enabled. This makes the noise figure capability suitable for a wider range of devices. Hardware Option 029 is highly recommended if the instrument is to be used for noise figure characterization.

All M983xAs (with and without Option 029) include the necessary filters to eliminate out-of-band noise conversion up to 40 GHz. Below 160 MHz or above 40 GHz, an external bandpass filter may be required for noise figure measurements.

Typical block diagrams of scalar-corrected (left) vector-corrected (right) noise figure measurements with M983xA are shown.

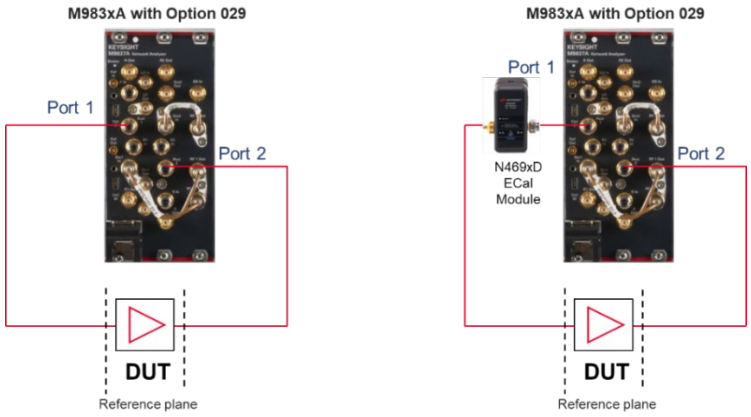

For calibration, a standard mechanical cal kit or ECal module is required for the S-parameter portion of the cal (an ECal used as a tuner cannot be shared for calibration). To calibrate a standard receiver for noise figure measurements, a power meter/sensor is required. A 346-serires noise source (Keysight 346C or 346C-K01 recommended) can be used for noise calibration of the instrument's receiver. Noise figure measurements with the M983xA are not supported below 50 MHz.

IQ Data Bandwidth up to 1.5 GHz / 4 GHz (S95050B/S95051B)

Industry-standard PathWave Vector Signal Analysis (89600 VSA) software enables single-connection multiple measurements of active device distortion analysis using the PXI VNA. The VSA IQ data-link feature in either S95070B modulation distortion or S95090B spectrum analysis application allows you to send IQ data from the VNA to the VSA software and analyze demodulation EVM, AM-AM, AM-PM, and more.

Vector signal analysis with S95050B/S95051B is supported with the M983xA. S95050B software license supports IQ bandwidth of up to 1.5 GHz, while S95051B supports bandwidth up to 4 GHz. The license is not required for bandwidth below 200 MHz. When a multiport VNA is configured with multiple M983xA modules, ports 1 and 2 support the wider bandwidth (1.5 or 4 GHz), while ports 3 or higher support a 29 MHz bandwidth.

Vector signal analysis with S95050B/S95051B is not supported with the M980xA.

Maximum Bandwidth	Software License	M980xA PXI VNA	M983xA PXI VNA [1]
29 MHz	Additional license not required	Yes	Yes
200 MHz	Additional license not required	Not available	Yes
1.5 GHz	S95050B	Not available	Yes
4 GHz	S95051B	Not available	Yes

1. When a multiport VNA is configured with multiple M983xA modules, ports 1 and 2 support the wider bandwidth (1.5 or 4 GHz), while ports 3 or higher support a 29 MHz bandwidth.

Modulation Distortion (S95070B)

This application software with the PXI VNA and a vector signal generator measures the in-channel and out-of-channel nonlinear behavior of power amplifiers or frequency converters under modulated stimulus conditions. It is based on a new frequency-domain measurement method that quickly measures EVM or ACPR and performs VNA calibration to make accurate measurements.

The software provides a full integrated measurement setup including modulation signal generation and allows the user to easily configure and make the measurements.

M983xA hardware Options 270 or 271 with built-in upconverter are highly recommended for modulation distortion analysis using the application. While these internal hardware options are not required in running the application, without them the setup requires external components and is complex M983xA. Options 270 or 271 greatly simplify the measurements. Vector signal generators covering frequencies of 6 GHz or higher are supported with the upconverter. S95070B also works with M980xA with direct receiver access configurations. This application requires Option 190 on M983xA, or Option 090/190 on M980xA.

The maximum bandwidth of modulation distortion analysis is limited by the modulation source. For example, the maximum bandwidth is 1.2 GHz when used with M9410A VXT with Option B12 (1.2 GHz analysis bandwidth), and 2 GHz with M9383A/B or M9384B. [1]

The signal generators [2] supported by this application are:

- M9383A PXIe Microwave Signal Generator, 1 MHz to 44 GHz
- M9383B/84B/M9484C VXG Microwave Signal Generator, 1 MHz to 44 GHz / 54 GHz
- M9410A/11A/15A/20A/21A VXT PXIe Vector Transceiver [3]
- N5182A/B MXG X-Series RF Vector Signal Generator, 100 kHz/9 kHz to 6 GHz
- N5186A MXG Vector Signal Generator, 9 kHz to 8.5 GHz
- N5192A/94A UXG X-Series Vector Adapter Modified Version, 50 MHz to 20 GHz, with U3039ACK 6 GHz Reference Source

1. The maximum modulation bandwidth of M9837A-271 is frequency dependent. (The maximum bandwidth is 550 MHz for 31.8 GHz to 37 GHz, and 2 GHz for the rest of specified frequency ranges).
2. When Signal Studio is used, a waveform playback license N76xxEMBC is required for the external source. For more information, refer to Signal Studio Brochure (5989-6448EN).
3. M9420A Option 506 (60 MHz to 6 GHz) is supported. Option 504 (60 MHz to 3.8 GHz) is not supported.

Modulation distortion analysis for frequency converters requires S95083B, vector and scalar mixer/converter measurements software. S95082B, scalar mixer/converter measurement software is not sufficient.

This application also includes a VSA IQ data-link feature for sending IQ data from the PXI VNA to Keysight's Pathwave 89600 VSA software for demodulation and analysis of EVM, AM-AM/AM-PM, and more. With no additional license, the data link supports up to 200 MHz of modulation bandwidth with M983xA and a 29 MHz bandwidth with M980xA. S95050B/51B software licenses extend the modulation bandwidth to 1.5 GHz/4 GHz with M983xA.

Scalar Mixer/Converter Measurements (S95082B)

S95082B provides Frequency Offset Mode (FOM) to set the frequency of the VNA's internal source independently from where the receivers are tuned, and to configure external sources using External Device Configuration. This functionality is also included with S95029B/070B/083B/084B/086B/087B/089B/090B.

With a simple setup and calibration, this application delivers the highest accuracy for scalar conversion-loss/gain measurements by combining one-port and power-meter calibrations to remove mismatch errors. S95082B provides an intuitive and easy-to-use user interface for setting up mixer and converter measurements, with single or dual conversion stages. It can control external signal generators for use as LO signals. Supported external sources include the Keysight ESG, PSG, EXG, and MXG Series, as well as other SCPI-controlled signal generators. FOM is required for hardware triggering with external sources.

S95082B is compatible with S95084B, which enables measurements of converters with internal LOs.

Vector and Scalar Mixer/Converter Measurements (S95083B)

This application includes the scalar mixer/converter plus phase (SMC+Phase) measurement class that provides fully calibrated conversion gain/loss, relative phase, and absolute group delay measurements of mixers and converters without the need for reference or calibration mixers. Eliminating the calibration mixer requires a U9391C/F/G comb generator [1] and an external DC power supply capable of sourcing +15 V and 300 mA for U9391C/F or 800 mA for U9391G. A macro-based series-reference-mixer version of VMC is also included for measuring the phase difference between multiple paths or devices, or for measuring phase shifts within the frequency-converting device. The macro also supports characterization of the calibration mixer that is supplied by the user.

SMC+Phase with the S95083B provides an intuitive and easy-to-use user interface for setting up mixer and converter measurements, with single or dual conversion stages. It can control the analyzer's built-in source as well as external signal generators for use as LO signals. Supported external sources include the Keysight ESG, PSG, EXG, and MXG Series, as well as other SCPI-controlled signal generators. S95083B is a superset of S95082B, so they should not be installed together.

S95083B is compatible with S95084B, which enables measurements of converters with internal LOs.

1. When a comb generator is used as a phase reference for calibration and the start frequency of the measurement is less than 630 MHz, a user-supplied calibration mixer is required.

Embedded LO Capability (S95084B)

This application tunes the analyzer's receivers to the output frequency of the converter under test without the need for access to internal LOs or a common reference signal. S95084B is intended to work with S95082B and S95083B measurement applications.

Gain Compression Measurements (S95086B)

The Gain Compression Application (GCA) provides input power, output power, gain, and phase at the compression point of an amplifier or frequency converters, over a specified frequency range. GCA's SMART Sweep is very fast and easy-to-use. GCA also includes a guided calibration that corrects for absolute power levels, frequency response, and mismatch errors.

Intermodulation Distortion Measurements (S95087B) using M980xA

The intermodulation distortion (IMD) application makes it very easy to set up and calibrate swept-IMD measurements of both amplifiers and frequency converters. It controls the frequency and power of internal and external sources and tunes the receivers to the main tones as well as the IMD products in a single measurement channel. The user can sweep either the center frequency of the two stimulus signals, the frequency spacing of the two stimulus signals about a fixed center frequency, or the power of one or both stimulus signals or the power of the LO signal. The analyzer can measure intermodulation distortion products of order 2, 3, 5, 7, or 9, and can display the associated intercept points.

Two M980xA PXI VNA modules in a multiport configuration are needed for IMD measurements with each built-in source generating one tone. The most common method with the M980xA is to use two reference receivers for power leveling – the first tone signal (f1) is measured with the first M980xA's one receiver (e.g., a1 receiver of logical port 1), and the second tone signal (f2) is measured with the second M980xA's receiver (e.g., a3 receiver of logical port 3).

An external combiner (for example, hybrid power dividers 87302C, 87303C, or 87304C) is required to combine the tones. Any of the remaining VNA ports can be used as the receive port. The S95551B multiple modules measurement software is required to configure a multiport VNA with multiple M980xA modules. A typical configuration for IMD measurements with two 2-port M980xA modules is shown.

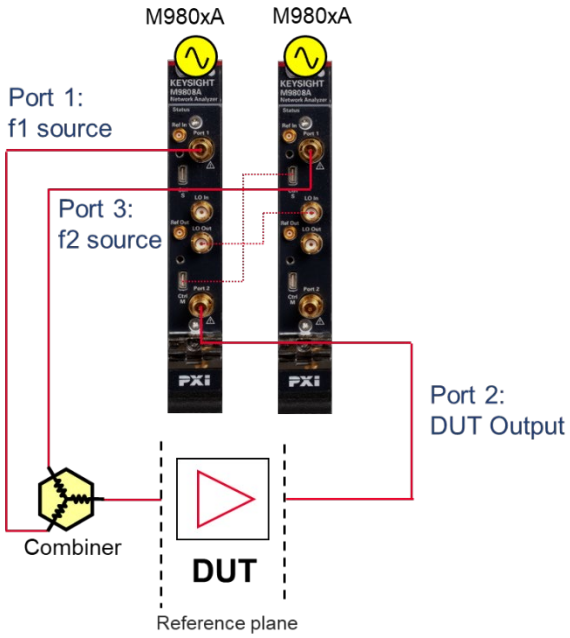

Intermodulation Distortion Measurements (S95087B) using M983xA

The intermodulation distortion (IMD) application makes it very easy to set up and calibrate swept-IMD measurements of both amplifiers and frequency converters. It controls the frequency and power of internal and external sources and tunes the receivers to the main tones as well as the IMD products in a single measurement channel. The user can sweep either the center frequency of the two stimulus signals, the frequency spacing of the two stimulus signals about a fixed center frequency, or the power of one or both stimulus signals or the power of the LO signal. The analyzer can measure intermodulation distortion products of order 2, 3, 5, 7, or 9, and can display the associated intercept points.

One M983xA and one M983xA (or M980xA) modules in a multiport configuration are needed for IMD measurements with each built-in source generating one tone. The most common method with the M983xA is to use one reference receivers for power leveling – both first (f1) and second (f2) tone signals are measured with the M983xA's one receiver. Unlike the M980xA using two reference receivers, M983xA's internal couplers can be directly accessed, so the couplers can be placed as close as possible to input of the DUT. This configuration improves measurement accuracy of reflection measurements by eliminating insertion loss associated with a combiner.

An external combiner (for example, hybrid power dividers 87302C, 87303C, or 87304C) is required to combine the tones. Any of the remaining VNA ports can be used as the receive port. The S95551B multiple modules measurement software is required to configure a multiport VNA with multiple M983xA modules. Typical configurations for IMD measurements with two 2-port M983xA modules (left) and one M983xA and one M980xA (right) are shown.

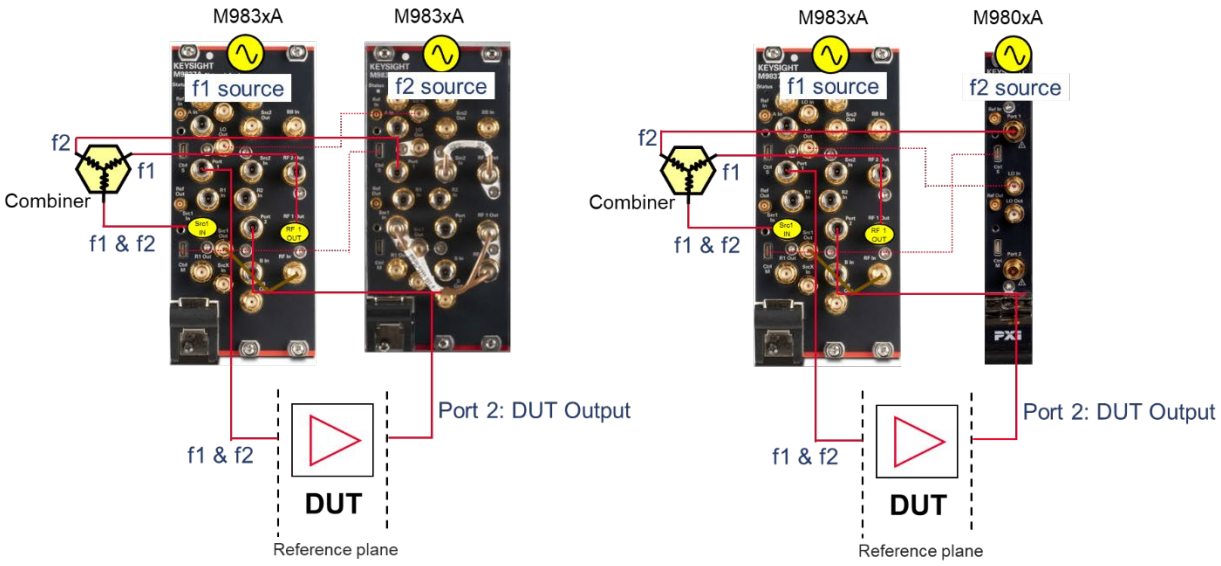

Source Phase Control (S95088B)

This application allows users to set calibrated, arbitrary phase differences between two internal sources with the PXI VNA's multiple module measurements with S95551B. The phase difference can be fixed or swept between two specified phase values. S95088B also controls the relative power level between the sources using the receiver-leveling feature. S95088B is targeted for active-load control, where the analyzer provides a precise, electronically settable impedance to the output port of a device, while gain and output power are measured. This capability can be combined with external load-pull software to create traditional load-pull power contours.

Differential and I/Q Device Measurements (S95089B)

In systems with a single source, the S95089B software can be used to characterize the harmonics of an active device, such as an amplifier. The source is set to the fundamental frequency and the receivers can easily be set to a multiple to measure the fundamental (x1), second (x2), third (x3), or higher harmonics. Power sweeps can be used to characterize the harmonic levels versus power.

In systems with more than one source, the S95089B combines source-phase control of the internal or external sources with frequency-offset mode, enabling simplified test of I/Q modulators/converters and differential mixers, and harmonic measurements of differential amplifiers. The phase difference between sources can be fixed (for example, at 90 or 180 degrees), or swept between two specified phase values. Providing accurate control of the relative phase between sources eliminates the need for hybrid couplers and baluns to create quadrature or differential signals. After achieving the desired phase alignment, the instrument's receivers can be tuned to all frequencies needed to characterize the DUT. On an I/Q modulator for example, measurements can be made of both the desired and suppressed conversion bands, along with LO leakage, harmonics and other spurious signals. Phase sweeps can be used to determine a DUT's phase imbalance versus frequency.

In all cases, users can specify measurements with individual receivers or multiple receivers combined with a wide range of mathematical operators. Power measurements can employ match correction for increased accuracy.

Spectrum Analysis (S95090B)

The Spectrum Analyzer (SA) application adds high-performance microwave spectrum analysis to the PXI VNA. With fast stepped-FFT sweeps resulting from optimized data processing, the SA application provides quick spurious searches over broad frequency ranges. Simultaneous spectrum measurements can be done using test and reference receivers. This multi-channel SA can be used with the internal swept-signal generators for efficient measurements of spurious signals emanating from mixers and frequency converters. The SA application employs source-power and receiver-response calibration as well as fixture de-embedding, providing in-fixture and on-wafer spectrum measurements with the highest level of accuracy. Accurate and fast Noise Power Ratio (NPR) measurement capability is also included in this software application. It provides the ability of setting up and controlling of external signal generator/arbitrary waveform generators and performing the calibration of the flatness of a wideband signal and distortion signals in notches and achieving very fast NPR measurements. Optional external attenuators should be connected to the VNA's test ports to avoid receiver compression when measuring large signals.

This application also includes a VSA IQ data-link feature for sending IQ data from the PXI VNA to Keysight's Pathwave 89600 VSA software for demodulation and analysis of EVM, AM-AM/AM-PM, and more. With no additional license, the data link supports up to 200 MHz of modulation bandwidth with M983xA and a 29 MHz bandwidth with M980xA. S95050B/51B software licenses extend the modulation bandwidth to 1.5 GHz/4 GHz with M983xA.

S95090B software requires Option 090 or 190 on M980xA, Option 190 on M983xA.

Active Hot Parameters (S95111B)

Active hot parameters software allows the analyzer a more accurate method for testing Hot S-parameter, gain and output power than traditional methods by utilizing the X-parameter technology.

It removes active device and system interaction to precisely calculate the active parameters and output power into a nominal 50-ohm environment. The advanced theory removes system-to- system correlation problems. S95111B also provides key parameters of optimal load for maximum power, maximum power delivered to optimal load, and the DUT's fundamental X-parameters. Total 14 traces (parameters) are available with various sweep types, such as frequency sweep, power sweep, or two-dimensional frequency and power sweep.

Requires a multiport VNA configuration using multiple PXI VNA modules with S95551B. S95111B covers up to 50 GHz.

True-mode Stimulus (S95460B)

The application provides mismatch-corrected true-mode (true differential mode and true common mode) stimulus and enables accurate balanced measurements under real operating conditions. It also provides balanced measurements with forward-only sweeps, reverse-only sweeps, and frequency or power sweeps with arbitrary phase and amplitude offsets.

S95460B only works on a multiport VNA using multiple PXI VNA modules with S95551B.

Multiple Instruments/Modules Measurements (S95551B)

Keysight PXI VNA offers the capability to extend the number of calibrated ports of using multiple PXI VNA modules. With the S95551B software, multiple VNA modules may be installed in one or two PXI chassis and identified by the PXI VNA firmware as one VNA under a single controller. Measurements with a single PXI VNA module do not require the S95551B. S95551B is only required when more than one PXI VNA modules is used.

For the hardware options, each PXI VNA module needs to have its own option. For software capabilities, a host PC such as the PXI embedded controller only requires one valid license of S95xxxB to function if operating in multiport mode. For example, one copy of S95011B license is enough for four 2-port modules, if they are running as a single 8-port multiport system.

For M980xA, multiport configurations using up to 17 modules (e.g., 34 ports with seventeen 2-port modules) or a 66-port VNA (with eleven 6-port modules) have been evaluated. For M983xA, multiport configurations using up to 18 modules have been evaluated (e.g., 36-ports with eighteen 2-port modules). M980xA and M983xA modules can be combined into a single system.

The S95551B extends the number of internal sources by using multiple PXI VNA modules. You can use an additional signal source (fixed or swept) as a local oscillator for testing mixers and frequency converters, or two-tone intermodulation testing of amplifiers using SA measurement class. Operations using up to 17 internal sources of M980xAs have been evaluated. To independently control the frequency of the internal sources, one of the following software applications is required: S95029B/070B/082B/083B/084B/086B/089B/090B.

The frequency of the multiport array is determined by the lowest frequency instrument configured in the array. For example, a 4-port analyzer configuration using a M9800A (4.5 GHz) and a M9834A (20 GHz) would have a maximum frequency of 4.5 GHz when performing 4-port measurements. This behavior extends to other measurement application software (S95xxxB).

Each PXI VNA module is connected into the array with Keysight cables. A Y1730A Interconnect Cables for Multiport Configuration must be ordered separately for each additional PXI VNA module. All models within the M980xA/M983xA Series can be combined to create multiport configurations. For more details of multi-module configurations, refer to “PXI VNA Multi-module Installation Guide” at www.keysight.com/find/m980xa-mm

Multiport Calibration Assistant (S95552B)

This application software provides a tool to flexibly create and manage cal sets for multiport measurements. For example, two cal sets with independent test ports can be combined as one cal set with a greater number of test ports. The software also offers a way to re-calibrate using a certain set of test ports to refresh the cal set.

At least one ECal module is required for the operation of S95552B.

Multiport Calibrated Measurements with Switch Instruments (S95553B)

This application provides a macro which enables full multiport error correction and measurement capabilities using external switch instruments such as the M9164A/B or M9165A/B PXIe Solid-state Switch Matrix [1]. The software delivers an easy-to-use measurement wizard that simplifies measurement procedures and reduces the setup time of complicated multiport measurements. Measured multiport S-parameters are displayed in the VNA viewer. Multiport calibrated measurements with S95553B are available only for standard S-parameter measurement class.

The 66-port multiport configuration using a 10-port M980xA (with 6-port and 4-port M980xAs) and four 2x16 PXIe switch matrices has been evaluated.

Only 4-port ECal modules (e.g., N4431/32/33D) are supported for multiport calibration with the S95553B. N756xA multiport ECal modules are not supported.

1. Multiport calibrated measurements with 18 GHz M9164C or M9165C switch matrix are supported but the maximum frequency is limited at 9 GHz.

Banded Millimeter-Wave Network Analysis (S95560B)

This software enables M980xA PXIe VNA to work with N5252AWxx frequency extenders or a combination of N5252APXI test set and N5262BWxx frequency extenders and allows you to configure banded millimeter-wave network analyzer up to 330 GHz. S95560B is not supported for M983xA.

Available bands depend on the combination of the VNA and the frequency extenders. Refer to Banded Millimeter Wave Network Analysis technical overview (5992-2177EN) for more details.

Note: This software is not required for the N5252A E-band network analyzer system, or the banded millimeter-wave network analyzer configured with the M937xA.

Distributed VNA Measurements (S95571B)

This software enables vector corrected magnitude and phase measurements between two PXI VNAs in different chassis separated by up to five meters. By placing each VNA as close to the DUT as possible, the length of the test cables between the VNA test ports and the DUT can be minimized, helping preserve

system dynamic range. This benefit is especially significant at high frequencies, where test cable loss greatly degrades overall system performance. Measurement speed is also improved by using a wide IF bandwidth.

For distributed VNA configurations, interconnect cables are used between the two VNAs, but phase drift caused by physical movement or environmental temperature changes can affect the measurement results. The S95571B supports automatic refresh cal, which compensates for this phase drift and ensures stable, accurate measurements with distributed VNAs.

S95571B requires a multiple instrument measurement setup using two or more M980xA VNA modules together with S95551B. Configurations using ten M980xA VNAs have been evaluated. The M983xA Series are not supported with S95571B.

Material Measurements

The Keysight N1500A materials measurement suite streamlines the process of measuring complex permittivity and permeability with a vector network analyzer. Various type of measurements, such as transmission line and free space, arch reflectivity, resonant cavity, and coaxial probe are available as options. The easy-to-use software guides the user through setup and measurement, instantly converting S-parameter network analyzer data into the data format of your choice and displaying the results within seconds. Results can be charted in a variety of formats: εr', εr", tand, μr', μr", tandμ, and Cole-Cole.

N1930xB Physical Layer Test System (PLTS) Software

The PLTS software platform has become an industry standard for calibration, measurement, and analysis of linear passive interconnects such as cables, connectors, backplanes, and printed circuit boards. Utilizing either a Vector Network Analyzer (VNA) or a Time Domain Reflectometer (TDR), fast and accurate measurements can be obtained without in-depth knowledge of microwave measurement techniques. Refer to www.keysight.com/find/plts or the technical overview (5989-6841EN) for more details.

Vector Network Analyzer (VNA) Simulator (S9405xB)

VNA simulator runs on your PC and simulates operations of Keysight's latest VNAs (PNA/ENA/PXI or Streamline Series VNA), eliminating the need for a VNA for your test program development. The simulator has standard and advanced versions. The standard version (S94050B) supports operations of standard S-parameter measurement class. The advanced version (S94051B) gives access to all advanced capabilities with S95xxxB software such as spectrum analysis for the PXI VNAs except S95007B or S95552B software.

S9405xB is available on subscription licenses only.

Wideband Active Load Control for Modulation Distortion (S94572B/3B)

The wideband active load control application enables power amplifier distortion measurements under varying load conditions that are controlled across the entire modulation bandwidth, providing powerful insight into device performance and degradation.

Users can define gamma as a single point, specify a phase delay, or import an S1P file. Two modulated sources provide the input stimulus and synthesize the user-defined load conditions. The M5300A PXIe RF AWG is used as the two modulated sources, with the M9046A PXIe chassis option QS1 or QS3, which can provide a 2.4GHz frequency reference to the M5300A. The M5300A's frequency range is up to 16 GHz and only works with active load pull application. Requires M9834A or M9837A PXIe VNA with hardware option 190, S95070B Modulation Distortion application, and M5300A. S94572B is export controlled.

A typical configuration for wideband active load pull measurements with the M9837A Option 270 is shown. Modulated signals are generated with channel 1 of the M5300A, and synthesizing gamma values at all frequencies in the modulation bandwidth is accomplished using the channel 2 of the M5300A. The M983xA's Option 270/271 is highly recommended for higher power compared to Option 205 for the DUT's input. S94572B is export controlled. S94573B functions are restricted to 50 GHz.

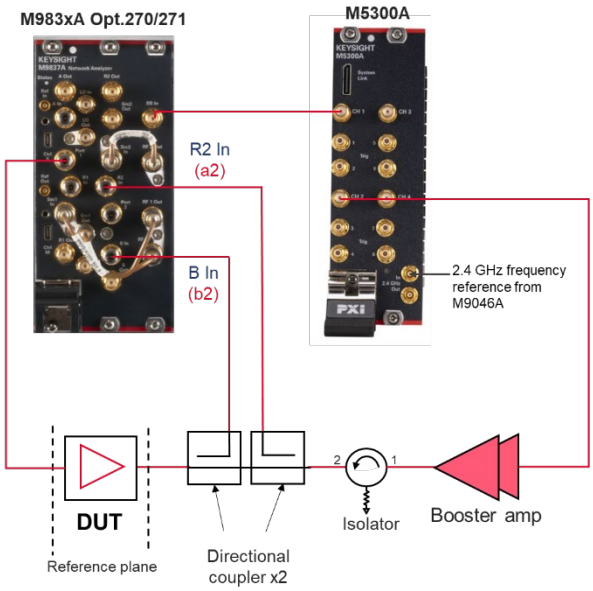

External components should be selected based on their high-power limits or frequency range specifications [1]. Be sure that these components can handle the output power level of the booster amplifier. Refer to Wideband Active Load Pull Measurement Solution - solution brief (3123-1822.EN) for more details.

1. External components are not included in the M983xA. Must be purchased separately.

Device Measurement eXpert (DMX) (S94601B)

S94601B assists the users in setting up measurements automatically with customizable templates to use consistent measurement settings in different stages of design and test workflow. It supports various types of DUTs, and once the right DUT is selected, appropriate measurement parameters are listed, and the users can select the parameters of interest.

It provides intelligent algorithms that optimizes measurement setups based on instrument and DUT performance limitations and protects both the DUT and the instrument.

Limit Assistant (S94602B)

S94602B allows the users to acquire the data from a VNA or data file in csv, s2p or prn format and easily generate limit masks for complex limit test conditions with an intuitive and convenient graphical interface for production test applications.

Automated Measurement Expert (AMX)

This software package is a smart software solution for automated multiport S-parameter measurements with the PXI VNA. The S94701A AMX test plan builder provides an interactive GUI which helps you edit your multiport DUT test plans and generate test sequence files for the network analyzers. The S94702A and KS8400A software running on the analyzer executes the test sequences according to the optimized test sequence files generated by the S94701A.

Restricted Feature Enable Licenses (S9480xB)

S9480xB licenses lift the restrictions of export-controlled features of the base firmware or other software applications.

S94800B-KL0 (Available as an option of the S9480XBU SW upgrade)

This license allows the users to use a feature, hybrid source, above 90 GHz. It is export controlled.

S94801B-KL1 (Available as an option of the S9480XBU SW upgrade)

This license allows the users to use a feature, hybrid source, under any of these restricted conditions. (The modulation bandwidths are limited without this license.)

- Modulation bandwidth > 2.2 GHz between 4.8 GHz and 31.8 GHz
- Modulation bandwidth > 550 MHz between 31.8 GHz and 37 GHz
- Modulation bandwidth > 2.2 GHz between 37 GHz and 75 GHz
- Modulation bandwidth > 5 GHz between 75 GHz and 90 GHz

S9480XBU Restricted Feature Enable License Upgrade This license allows you to add the S94800B-KL0 or the S94801B-KL1 on your M980xA or M983xA.

DisplayPort DP Cable Compliance Test Software (S94DPPCB)

This application software provides a fast and automated way to characterize and debug DisplayPort and DP Alt Mode on USB Type-C cable assemblies on UHBR, HBR, and RBR speed rate technologies. It performs compliance test automation with a 4-port VNA and generates a comprehensive test report including test limits, margins, and pass/fail status of each test parameter. The test plans performed by the S94DPPCB compliance test software are based on the latest DisplayPort and DP Alt Mode Compliance Test Specification (CTS) by Video Electronics Standards Association (VESA). S94DPPCB supports multiport configurations using a 4-port VNA and L8990M-0LZ (e.g. 20-port switch matrix), which fully automates the test procedure and dramatically reduces the test time by eliminating manual cable reconnections. S94DPPCB requires S95011B, KS8400B PathWave Test Automation and KS8401B HTML5 Result Listener Plugin.

Refer to www.keysight.com/find/S94DPPCB for more details.

USB Type-C Interconnects Compliance Test Software (S94USBCB)

This application software provides a fast and automated way to characterize and debug USB Type-C interconnect products such as cable assemblies, connectors, or raw cables on USB4, USB 3.2, USB 3.1, and USB 2.0 technologies. It allows to automatically execute compliance tests with a 4-port VNA based on the latest USB Type-C Compliance Test Specification (CTS) by USB-IF, and displays the comprehensive test results including test limits, margins, and pass/fail status of each test parameter.

S94USBCB supports multiport configurations using a 4-port VNA and L8990M-0LZ (e.g., 20-port switch matrix), which fully automates the test procedure and dramatically reduces the test time by eliminating manual cable reconnections.

S94USBCB requires S95011B, KS8400B PathWave Test Automation and KS8401B HTML5 Result Listener Plugin.

Refer to www.keysight.com/find/S94USBCB or S94USBCB USB Type-C Interconnects Compliance Software data sheet (literature number 3122-1253.EN) for more details.

PathWave Vector Signal Analysis (89600 VSA) Software

PathWave Vector Signal Analysis (89600 VSA) software is a comprehensive set of tools for demodulation and vector signal analysis. Supporting PXI VNA with Option 190, the software provides the flexibility and sophisticated measurement tools essential to find and fix signal problems. The multi-channel measurement capability with multiple PXI VNA modules can configure, execute and display multiple measurements simultaneously to characterize numerous signals. Up to 12 channels measurements using the M980xA have been evaluated. Powerful display tools enable comparisons and correlation of results from different measurements.

VSA IQ data link feature in either S95070B modulation distortion or S95090B spectrum analysis application is necessary to enable vector signal analysis using the M980xA or M983xA Option 190. For synchronization with external vector signal generators, Y1730A-800/801/810 cables are recommended for connecting to the 10 MHz external reference ports (Ref In/Ref Out) of the PXI VNA.

Refer to http://www.keysight.com/find/89600 to learn more about 89600 VSA software.

Keysight Software Licensing Options Provide Flexibility and Support

Projects ramp up and down, teams grow and shrink, and projects move location. In such a dynamic environment, you need flexible licensing options that allow you to balance your project's requirements. Whether your software will be a staple for years to come or you have a short-term need for a leading-edge measurement application, Keysight's licensing puts you in charge.

Choose Your Term. Choose Your Type. Keep Control of Your Budget.

- Select a node-locked, transportable, USB portable or floating license type, depending on how much flexibility you need.
- Select a subscription or perpetual license term, depending on how long you need to use the software.
- Each license is sold with a KeysightCare software support subscription which provides technical support with ensured response time, proactive software updates and enhancements.

Choose a license term and type that best suits your requirements from the table below.

License term [1]

License Term	Options
Perpetual	Perpetual licenses can be used indefinitely.
Subscription	Licenses can be used through the term of the subscription (6, 12, 24, or 36 month)

License type

License Type	Descriptions
Node locked [2]	License can be used on one specified instrument/computer.
Transportable	License can be used on one instrument/computer at a time but may be transferred to another using Keysight Software Manager (internet connection required).
USB portable	License can be used on one instrument/computer at a time but can be transferred to another using a certified USB dongle (available for additional purchase, Keysight part number E8900-D10).
Floating	Networked instruments/computers can access a license from a server one at a time. Multiple licenses may be purchased for concurrent usage. Three types of floating license are available: Single Site: 1-mile radius from the server Single Region [3]: Americas, Europe, Asia Worldwide (export restriction identified in End User License Agreement (EULA))

1. The license types for S95xxxB software must be ordered separately and installed from the web after the receipt of the instrument.
2. Node-locked licenses are not recommended for measurements in secured environment where SSD of a host PC must be removed or changed for sanitization process. Select other license types (transportable, USB portable or floating) for more flexibility.
3. Americas (North, Central, and South America, Canada); Europe (European Continent, Middle Eastern Europe, Africa, India); Asia (North and South Asia Pacific Countries, China, Taiwan, Japan).

KeysightCare Software Support Subscription Provides Peace of Mind Amid Evolving Technologies

- Ensure your software is always current with the latest enhancements and measurement standards.
- Gain additional insight into your measurement problems with live access to our team of technical experts.
- Stay on schedule with fast turnaround times and priority escalations when you need support.

KeysightCare software support subscription

Subscription	Descriptions
KeysightCare software support	Perpetual licenses are sold with a 12 (default), 24, 36, or 60-month software support subscription. Support subscriptions may be renewed for a fee after that.
	Software subscription licenses include a software support subscription through the term of the license.

Upgrade Your System

Upgrade kits are available to add options after initial purchase. To upgrade the PXI VNA, order the corresponding item number. To add application software, order the appropriate standalone mode numbers (S95xxxB).

A complete list of M980xA upgrade kits is available on our Web site:
http://www.keysight.com/find/m980xa-upgrades

A complete list of M983xA upgrade kits is available on our Web site:
http://www.keysight.com/find/m983xa-upgrades

Multi-Site Measurement Configurations

Multi-site capability allows each PXI module to behave as an independent VNA and perform simultaneous measurements to increase overall throughput. Each PXI VNA module or multiport array of modules is installed and identified under a single PXI controller. This makes it possible to run measurements of different devices at the same time or different measurement paths in a single component.

Multiple instances of the PXI VNA software are launched, and each software instance is connected to either an individual PXI VNA, or a multiport array. Each instance behaves as an-independent instrument to be used simultaneously, resulting in a significantly lower cost-of-test per device with improved throughput.



Examples of multi-site measurement configurations

To enable additional features of S95xxxB software in a multi-site configuration, one floating license must be installed in a PXI controller for each additional VNA instance. This behavior applies to all S95xxxB software models. If features with S95xxxB software are not required for multi-site measurements, an additional software license is not needed.

M983xA with Configurable Test Set

The M983xA comes with a configurable test set to allow for flexible set up of test systems by integrating with external components [1] such as booster amplifiers, attenuators, or directional couplers. This functionality combined with modulated signal analysis allows you to characterize highly integrated components with a single connection.

High-power S-parameters Tests

One example using the M983xA with configurable test set is S-parameter measurements of high-power devices. When you need an input level higher than the analyzer's source can provide, booster amplifiers are necessary to increase the power level incident upon the DUT. However, the reference signal is measured before the booster amplifier with a standard configuration of a standard 2-port VNA such as M980xA, and temperature drift or high reverse isolation of a booster amplifier will prevent accurate reflection measurements of the DUT's input.

A typical configuration for high-power measurements with M9837A Option 205 is shown. Reflected and transmitted signals of the DUT are detected with the receivers, and the VNA firmware provides measured high-power S-parameters.

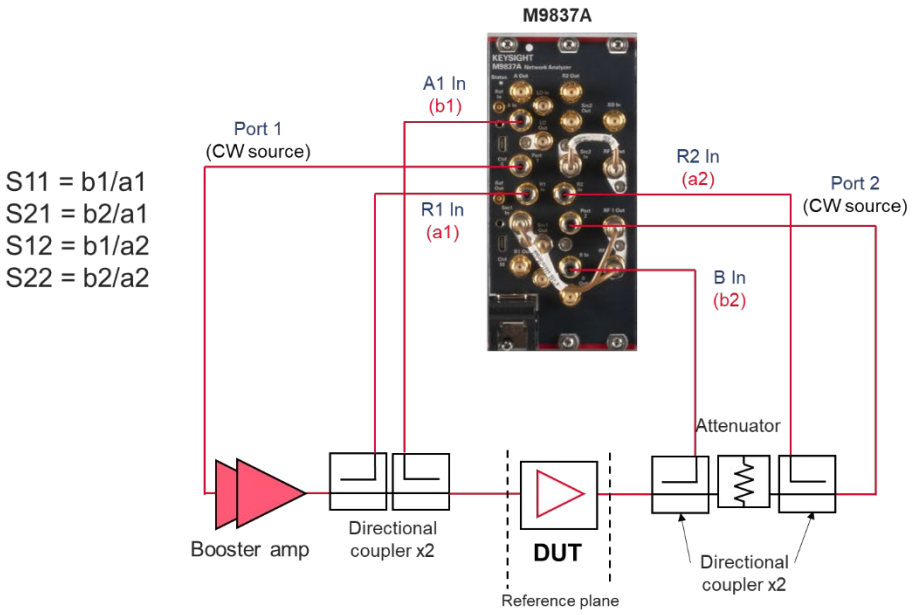

External components should be selected based on their high-power limits or frequency range specifications. Be sure that these components can handle the output power level of the booster amplifier.

1. External components are not included in the M983xA. Must be purchased separately.

Modulation Distortion Analysis with Vector Signal Source

An M983xA with Option 270/271 and an external modulated source (e.g., M9410A VXT) can be combined to support both vector network analysis and modulation distortion analysis with a single connection. RF modulation signals under 6 GHz from the external source are added to the “BB In” (Baseband input) port on the M983xA’s front panel, and then upconverted with a built-in upconverter to output mmwave modulated signals at the test ports up to 44 GHz. The S95070B software and M983xA’s Option 190 (vector signal analysis hardware) enable users to measure the nonlinear behavior of power amplifiers or frequency converting devices under the high-frequency, wideband modulated stimulus conditions.

The VNA-based vector correction extends the reference planes of the signal source to the DUT’s planes. As a result, you can achieve an excellent signal fidelity resulting in accurate and repeatable modulated distortion measurements. The system delivers faster, more accurate, and repeatable EVM and ACPR measurements compared to conventional signal analyzers.

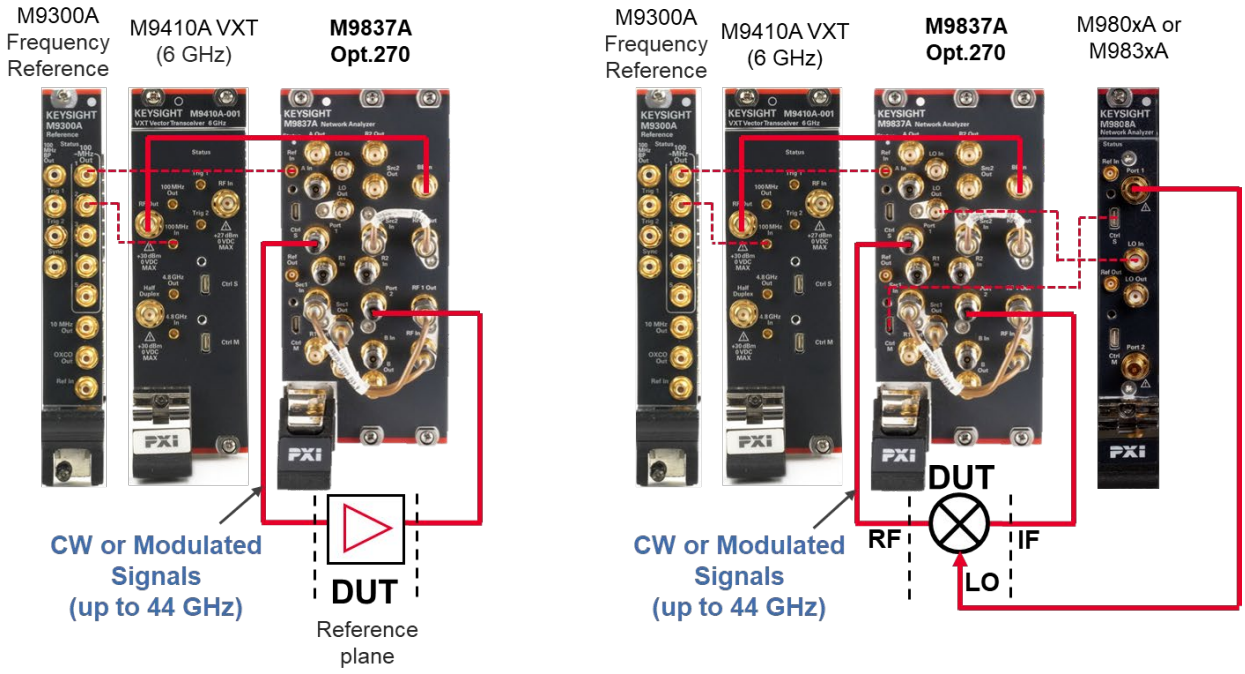

Modulation distortion analysis setup for amplifiers (left), and frequency converters (right)

Measurement Accessories

A complete list of RF and microwave test accessories is available on our Web site: www.keysight.com/find/mta

Accessories are available in these connector types: 50 Ω Type-N, 3.5 mm, 7 mm, 2.4 mm, 2.92 mm, 1.85 mm, 1.0 mm, and waveguide. Test port cables and a calibration kit should be added for a complete measurement system. A verification kit is used to verify corrected system performance.

Cable and Adapter Sets

Keysight offers cables in the following types:

- Single cables in semi-rigid and flexible
- Cable sets in semi-rigid and flexible

There are also adapter sets available that protect the test port and convert the port to the desired connector interface. These kits contain:

- One male adapter
- One female adapter

To attain the best mechanical rigidity for device connection, use a single cable and the appropriate special adapter set. To attain the greatest flexibility for device connection, use a cable set.

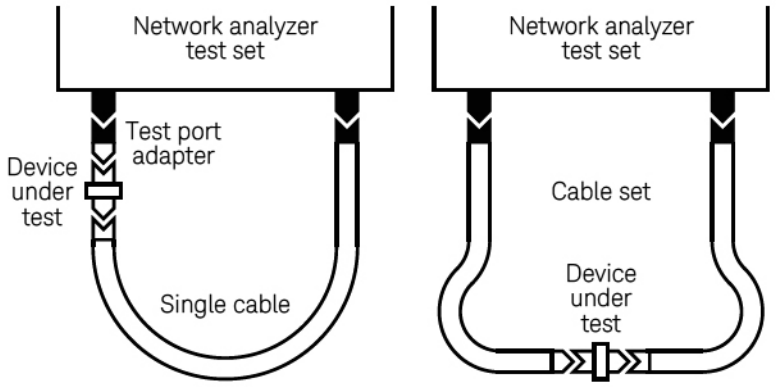

Cable and Adapter Sets

Coaxial measurements

Mechanical calibration kits include standards, such as opens, shorts and loads, which are measured by the network analyzer for increased measurement accuracy.

Choose a calibration kit for each connector type to be used.

Economy, includes:

- Open standards (male and female)
- Short standards (male and female)
- Fixed-termination standards (male and female)

Standard, includes the devices in the economy kit and adds:

- Sliding load standards (male and female) or a series of offset shorts

Precision, includes the devices in the economy kit and adds:

- 50 Ω airline(s) for TRL calibration
- TRL adapters

Electronic Calibration (ECal) kits replace mechanical calibration standards with one solid-state calibration module that is controlled by the network analyzer via USB, to present many different impedances to the test ports. A full two-port calibration can be performed quickly with a single connection. This technique reduces operator errors and connector wear and abrasion.

For more information about ECal modules, refer to the technical overview 5963-3743E (N4690, 85090, N4430, N7550 and N7560 Series).

Waveguide measurements

For waveguide measurements, Keysight offers mechanical calibration kits that include:

- Waveguide-to-coax adapters (X, P, K, R, Q, U, V)
- Precision waveguide section
- Flush short circuit
- Fixed terminations
- Straight section

For Devices with 1.85 mm Connectors

Mechanical calibration kits

85058B standard: DC to 67 GHz. Includes:

- 85058-60101 1.85 mm (m) short 5.4 mm
- 85058-60102 1.85 mm (m) short 6.3 mm
- 85058-60103 1.85 mm (m) short 7.12 mm
- 85058-60104 1.85 mm (m) short 7.6 mm
- 85058-60105 1.85 mm (f) short 5.4 mm
- 85058-60106 1.85 mm (f) short 6.3 mm
- 85058-60107 1.85 mm (f) short 7.12 mm
- 85058-60108 1.85 mm (f) short 7.6 mm
- 85058-60109 1.85 mm male open
- 85058-60110 1.85 mm female open
- 85058-60111 1.85 mm male load
- 85058-60112 1.85 mm female load
- 85058-60113 1.85 mm (m) to 1.85 mm (m) adapter
- 85058-60114 1.85 mm (f) to 1.85 mm (f) adapter
- 85058-60115 1.85 mm (m) to 1.85 mm (f) adapter

85058E economy: DC to 67 GHz. Includes:

- 85058-60101 1.85 mm (m) short 5.4 mm
- 85058-60105 1.85 mm (f) short 5.4 mm
- 85058-60109 1.85 mm male open
- 85058-60110 1.85 mm female open
- 85058-60123 1.85 mm male load
- 85058-60124 1.85 mm female load
- 85058-60113 1.85 mm (m) to 1.85 mm (m) adapter
- 85058-60114 1.85 mm (f) to 1.85 mm (f) adapter
- 85058-60115 1.85 mm (m) to 1.85 mm (f) adapter

Electronic calibration kits

N4694D Microwave ECal: DC or 10 MHz to 67 GHz, 2-ports. Includes:

- Option F0F: Both connectors are 1.85 mm female on module
- Option M0F: 1 female and 1 male 1.85 mm connector on module
- Option M0M: Both connectors are 1.85 mm male on module
- Option 0DC: DC to 67 GHz
- Option 100: 10 MHz to 67 GHz
- Option 00A adds:
  - 85058-60113 1.85 mm (m) to 1.85 mm (m) adapter
  - 85058-60114 1.85 mm (f) to 1.85 mm (f) adapter

For Devices with 2.4 mm Connectors

Mechanical calibration kits

85056A standard: DC to 50 GHz. Includes:

- 00901-60003 2.4 mm (m) fixed broadband load
- 00902-60004 2.4 mm (f) fixed broadband load
- 00915-60003 2.4 mm (m) sliding load
- 00915-60004 2.4 mm (f) sliding load
- 85056-60005 2.4 mm (m) to 2.4 mm (m) adapter
- 85056-60006 2.4 mm (f) to 2.4 mm (f) adapter
- 85056-60007 2.4 mm (m) to 2.4 mm (f) adapter
- 85056-60020 2.4 mm (m) short
- 85056-60021 2.4 mm (f) short
- 85056-60022 2.4 mm (m) open
- 85056-60023 2.4 mm (f) open

85056D economy: DC to 50 GHz. Includes:

- 00901-60003 2.4 mm (m) fixed broadband load
- 00902-60004 2.4 mm (f) fixed broadband load
- 85056-60005 2.4 mm (m) to 2.4 mm (m) adapter
- 85056-60006 2.4 mm (f) to 2.4 mm (f) adapter
- 85056-60007 2.4 mm (m) to 2.4 mm (f) adapter
- 85056-60020 2.4 mm (m) short
- 85056-60021 2.4 mm (f) short
- 85056-60022 2.4 mm (m) open
- 85056-60023 2.4 mm (f) open

Electronic calibration kits

N4693D Microwave ECal: DC or 10 MHz to 50 GHz, 2-ports. Includes:

- Option F0F: Both connectors are 2.4 mm female on module
- Option M0F: 1 female and 1 male 2.4 mm connector on module
- Option M0M: Both connectors are 2.4 mm male on module
- Option 0DC: DC to 50 GHz
- Option 100: 10 MHz to 50 GHz
- Option 00A adds:
  - 85056-60005 2.4 mm (m) to 2.4 mm (m) adapter
  - 85058-60006 2.4 mm (f) to 2.4 mm (f) adapter

For Devices with K Connectors (2.92 mm) Connectors

Mechanical calibration kits

85056KE01 DC to 40 GHz

For use with user supplied 2.92 mm test port cables. 2.92 mm (K connector) calibration kit with fixed and sliding loads. The Keysight 85056KE01 calibration kit is an ordering convenience to allow the pass-through ordering from Keysight for the Maury 8770E47 calibration.

85056KE02 DC to 40 GHz

For use with user supplied 2.92 mm test ports cables. 2.92 mm (K connector) calibration kit with fixed loads only. The Keysight 85056KE02 calibration kit is an ordering convenience to allow the pass-through ordering from Keysight for the Maury 8770F47 calibration kit.

The 85056KE01 and 85056KE02 contains one NMD 2.4 mm [1] (f) to 2.92 mm (f) and one NMD 2.4 mm [1] (f) to 2.92 mm (m) test port adapter to adapt the 2.4 mm test ports of the PNA to 2.92 mm. It also supplies 2.92 mm to 2.92 mm in-series adapters (3 adapters) and a PNA Cal Coefficients on a USB stick. Users must supply their own 2.92 mm or K-connector test port cables. Also included is a 2.92 mm torque wrench.

Maury Microwave Terms and Conditions for Warranty and Return apply. Maury Microwave Corp. calibration kits are to be returned directly to Maury Microwave for service, repair, or calibration issues and not to Keysight Technologies. For additional information go to www.maurymicrowave.com. Keysight Technologies does not guarantee the performance of the Maury calibration kits or the system performance when connected to Keysight vector network analyzers.

1. Special rugged female connector specifically for connecting to the network analyzer test port but does not mate with a standard male connector.

Electronic calibration kits

N4692D Microwave ECal: DC or 10 MHz to 40 GHz, 2-ports. Includes:

- Option F0F: Both connectors are 2.92 mm female on module
- Option M0F: 1 female and 1 male 2.92 mm connector on module
- Option M0M: Both connectors are 2.92 mm male on module
- Option 0DC: DC to 40 GHz
- Option 100: 10 MHz to 40 GHz
- Option 00A adds:
  - N4692-60021 2.92 mm (m) to 2.92 mm (m) adapter
  - N4692-60022 2.92 mm (f) to 2.92 mm (f) adapter

Adapter sets

- 11904A 2.4 mm (m) to 2.92 mm (m)
- 11904B 2.4 mm (f) to 2.92 mm (f)
- 11904C 2.4 mm (m) to 2.92 mm (f)
- 11904D 2.4 mm (f) to 2.92 mm (m)
- 11904S 2.4 mm to 2.92 mm, adapter set, contains 4 matched adapters

For Devices with 3.5 mm or SMA Connectors

Mechanical calibration kits

85033E economy: DC to 9 GHz. Includes:

- 85033-60016 3.5 mm (m) load
- 85033-60017 3.5 mm (f) load
- 85033-60018 3.5 mm (m) open
- 85033-60019 3.5 mm (f) open
- 85033-60020 3.5 mm (m) short
- 85033-60021 3.5 mm (f) short
- 8710-1761 torque wrench
- Option 100 adds:
  - 85027-60005 3.5 mm (f) to 3.5 mm (f) adapter
- Option 200 adds:
  - 85027-60007 3.5 mm (m) to 3.5 mm (m) adapter
- Option 300 adds:
  - 85027-60006 3.5 mm (m) to 3.5 mm (f) adapter

- Option 400 adds:
  - 1250-1744 3.5 mm (f) to 50 Ω Type-N (m) adapter
  - 1250-1743 3.5 mm (m) to 50 Ω Type-N (m) adapter
  - 1250-1745 3.5 mm (f) to 50 Ω Type-N (f) adapter
  - 1250-1750 3.5 mm (m) to 50 Ω Type-N (f) adapter
- Option 500 adds:
  - 1250-1746 3.5 mm (m) to 7 mm adapter (two included)
  - 1250-1747 3.5 mm (f) to 7 mm adapter (two included)

85052B standard: DC to 26.5 GHz. Includes:

- 00902-60003 3.5 mm (m) fixed load
- 00902-60004 3.5 mm (f) fixed load
- 00911-60019 3.5 mm (m) sliding load
- 00911-60020 3.5 mm (f) sliding load
- 85052-60006 3.5 mm (m) short
- 85052-60007 3.5 mm (f) short
- 85052-60008 3.5 mm (m) open
- 85052-60009 3.5 mm (f) open
- 85052-60012 3.5 mm (f) to 3.5 mm (f) adapter
- 85052-60013 3.5 mm (f) to 3.5 mm (m) adapter
- 85052-60014 3.5 mm (m) to 3.5 mm (m) adapter

85052C precision TRL: DC to 26.5 GHz. Includes:

- 00902-60003 3.5 mm (m) fixed load
- 00902-60004 3.5 mm (f) fixed load
- 85052-60006 3.5 mm (m) short
- 85052-60007 3.5 mm (f) short
- 85052-60008 3.5 mm (m) open
- 85052-60009 3.5 mm (f) open
- 85052-60032 3.5 mm (f) to 3.5 mm (f) adapter
- 85052-60033 3.5 mm (m) to 3.5 mm (m) adapter
- 85052-60034 3.5 mm (f) to 3.5 mm (m) adapter
- 85052-60035 3.5 mm short TRL line
- 85052-60036 3.5 mm long TRL line

85052D economy: DC to 26.5 GHz. Includes:

- 00902-60003 3.5 mm (m) fixed load
- 00902-60004 3.5 mm (f) fixed load
- 85052-60006 3.5 mm (m) short
- 85052-60007 3.5 mm (f) short
- 85052-60008 3.5 mm (m) open
- 85052-60009 3.5 mm (f) open
- 85052-60012 3.5 mm (f) to 3.5 mm (f) adapter
- 85052-60013 3.5 mm (f) to 3.5 mm (m) adapter
- 85052-60014 3.5 mm (m) to 3.5 mm (m) adapter

Electronic calibration kits

85093D RF ECal, DC or 300 kHz to 9 GHz, 2-ports. Includes:

- Option 003: 300 kHz to 9 GHz
- Option 0DC: DC to 9 GHz
- Option 00A: Add 3.5 mm adapters
- Option 00F: Both 3.5 mm connectors are female on module
- Option 00M: Both 3.5 mm connectors are male on module
- Option M0F: One female and one male connector, both 3.5 mm

85093D-xxx mixed-connector options

Port A Option			Port B Option		
Connector Type	**Female**	**Male**	**Connector Type**	**Female**	**Male**
3.5 mm	101	102	Type-N	203	204
			7-16	205	206
			4.3-10	207	208

N4431D Microwave ECal: DC to 13.5 GHz, 4 ports. Includes:

- Option 0DC: DC to 13.5 GHz (mandatory)
- Option 010: 3.5 mm female connector on four ports on module
- Option 020: Type-N female connector on four ports on module

N4431D-xxx mixed-connector options

Connector Type	Port A Option	Port B Option	Port C Option	Port D Option
Four 3.5 mm (f)			010	
Four Type-N 50 Ω (f)			020	
3.5 mm (f)	101	201	301	401
3.5 mm (m)	102	202	302	402
Type-N 50 Ω (f)	103	203	303	403
Type-N 50 Ω (m)	104	204	304	404
7-16 (f) [1]	105	205	305	405
7-16 (m) [1]	106	206	306	406
4.3-10 (f) [2]	107	207	307	407
4.3-10 (m) [2]	108	208	308	408

1. Limits ECal module high frequency to 7.5 GHz.
2. Limits ECal module high frequency to 7.5 GHz.

N4433D Microwave ECal: DC or 300 kHz to 26.5 GHz, 4 ports. Includes:

- Option 0DC: DC to 26.5 GHz
- Option 003: 300 kHz to 26.5 GHz
- Option 010: 3.5 mm female connector on four ports on module

N4433D-xxx mixed-connector options

Connector Type	Port A Option	Port B Option	Port C Option	Port D Option
Four 3.5 mm (f)			010	
3.5 mm (f)	101	201	301	401
3.5 mm (m)	102	202	302	402

N4691D Microwave ECal, DC or 300 kHz to 26.5 GHz, 2-ports. Includes:

- Option F0F: Both 3.5 mm connectors are female
- Option M0F: One female and one male connector, both 3.5 mm
- Option M0M: Both 3.5 mm connectors are male
- Option 0DC: DC to 26.5 GHz
- Option 003: 300 kHz to 26.5 GHz
- Option 00A adds:
  - 85052-60012 3.5 mm (f) to 3.5 mm (f) adapter
  - 85052-60014 3.5 mm (m) to 3.5 mm (m) adapter

N755xA Economy ECal, 2-ports. Includes:

- N7550A DC to 4 GHz, 2-ports
- N7551A DC to 6.5 GHz, 2-ports
- N7552A DC to 9 GHz, 2-ports
- N7553A DC to 14 GHz, 2-ports
- N7554A DC to 18 GHz, 2-ports
- N7555A DC to 26.5 GHz, 2-ports
- Option 3FF: Both 3.5 mm connectors are female
- Option 3MF: One female and one male connector, both 3.5 mm
- Option 3MM: Both 3.5 mm connectors are male
- Option 150: Plastic storage box
- N7550X-151: 3.5 mm or 2.92 mm torque wrench

N756xA Series Multiport ECal

- N7562A: DC to 9 GHz, 3.5 mm or Type-N connectors (female), 6-ports
- N7562AEP: DC to 9 GHz, 3.5 mm or Type-N connectors (female), 12/18/24/30/36/42/48-ports
- N7564A: DC to 20 GHz, 3.5 mm connectors (female), 6-ports
- N7564AEP: DC to 20 GHz, 3.5 mm connectors (female), 12/18/24/30/36/42/48-ports
- N7565A: DC to 26.5 GHz, 3.5 mm connectors (female), 6-ports
- N7565AEP: DC to 26.5 GHz, 3.5 mm connectors (female), 12/18/24/30/36/42/48-ports

N7560X (Accessories for N756xA Multiport ECal)

- Option 001: RF semi-rigid cable
- Option 002: RF semi-rigid cable for horizontal connection
- Option 003: USB 3.0 cable Type-A and Type-C dual screw locking, 2 m
- Option 150: Plastic storage box
- Option 701: Mounting bracket
- Option 702: Bracket horizontal connection
- Option 703: Stand plate
- Option 704: RF semi-rigid cable guard

For Devices with Type-N Connectors

Mechanical calibration kits

85032F standard: DC to 9 GHz. Includes:

- 85032-60017 Type-N (m) fixed load
- 85032-60018 Type-N (f) fixed load
- 85032-60013 Type-N (m) open
- 85032-60014 Type-N (f) open
- 85032-60016 Type-N (m) short
- 85032-60015 Type-N (f) short
- Option 100 adds:
  - 85032-60021 Type-N (f) to Type-N (f) adapter
- Option 200 adds:
  - 85032-60019 Type-N (m) to Type-N (m) adapter
- Option 300 adds:
  - 85032-60020 Type-N (m) to Type-N (f) adapter
- Option 500 adds:
  - 85054-60001 Type-N (f) to 7 mm adapter (two included)
  - 85054-60009 Type-N (m) to 7 mm adapter (two included)

85054B standard: DC to 18 GHz. Includes:

- 00909-60011 Type-N (m) fixed low-band load
- 00909-60012 Type-N (f) fixed low-band load
- 85054-60025 Type-N (m) short
- 85054-60026 Type-N (f) short
- 85054-60027 Type-N (m) open
- 85054-60028 Type-N (f) open
- 85054-60031 Type-N (f) to 7mm adapter
- 85054-60032 Type-N (m) to 7mm adapter
- 85054-60037 Type-N (f) to Type-N (f) adapter
- 85054-60038 Type-N (m) to Type-N (m) adapter
- 85054-80010 Type-N (f) sliding load
- 85054-80009 Type-N (m) sliding load
- 85054-60050 Type-N (f) connector gage
- 85054-60052 Type-N (f) gage master
- 85054-60051 Type-N (m) connector gage
- 85054-60053 Type-N (m) gage master

85054D economy: DC to 18 GHz. Includes:

- 85054-60025 Type-N (m) short
- 85054-60026 Type-N (f) short
- 85054-60027 Type-N (m) open
- 85054-60028 Type-N (f) open
- 85054-60031 Type-N (f) to 7mm adapter
- 85054-60032 Type-N (m) to 7mm adapter
- 85054-60037 Type-N (f) to Type-N (f) adapter
- 85054-60038 Type-N (m) to Type-N (m) adapter
- 85054-60046 Type-N (m) fixed load
- 85054-60047 Type-N (f) fixed load

Electronic calibration kits

85092D RF ECal, DC or 300 kHz to 9 GHz, 2-ports. Includes:

- Option 003: 300 kHz to 9 GHz
- Option 0DC: DC to 9 GHz
- Option 00A: Add Type-N 50 Ω adapters
- Option 00F: Both Type-N 50 Ω connectors are female on module
- Option 00M: Both Type-N 50 Ω connectors are male on module
- Option M0F: One female and one male connector, both type-N 50 Ω

85092D-xxx mixed-connector options

Port A Option			Port B Option		
Connector Type	**Female**	**Male**	**Connector Type**	**Female**	**Male**
Type-N	103	104	3.5 mm	201	202
			7-16	205	206
			4.3-10	207	208

N4431D Microwave ECal: DC to 13.5 GHz, 4 ports. Includes:

- Option 0DC: DC to 13.5 GHz (mandatory)
- Option 010: 3.5 mm female connector on four ports on module
- Option 020: Type-N female connector on four ports on module

N4431D-xxx mixed-connector options

Connector Type	Port A Option	Port B Option	Port C Option	Port D Option
Four 3.5 mm (f)			010	
Four Type-N 50 Ω (f)			020	
3.5 mm (f)	101	201	301	401
3.5 mm (m)	102	202	302	402
Type-N 50 Ω (f)	103	203	303	403
Type-N 50 Ω (m)	104	204	304	404
7-16 (f) [1]	105	205	305	405
7-16 (m) [1]	106	206	306	406
4.3-10 (f) [2]	107	207	307	407
4.3-10 (m) [2]	108	208	308	408

1. Limits ECal module high frequency to 7.5 GHz.
2. Limits ECal module high frequency to 7.5 GHz.

N4432D Microwave ECal: DC or 300 kHz to 18 GHz, 4 ports. Includes:

- Option 0DC: DC to 18 GHz
- Option 003 300 kHz to 18 GHz
- Option 020: Type-N female connector on four ports on module

N4432D-xxx mixed-connector options

Connector Type	Port A Option	Port B Option	Port C Option	Port D Option
Four Type-N 50 Ω (f)			020	
3.5 mm (f)	101	201	301	401
3.5 mm (m)	102	202	302	402
Type-N 50 Ω (f)	103	203	303	403
Type-N 50 Ω (m)	104	204	304	404

N4690D Microwave ECal, DC or 300 kHz to 18 GHz, 2-ports. Includes:

- Option F0F: Both Type-N connectors are female
- Option M0F: One female and one male connector, both Type-N connectors
- Option M0M: Both Type-N connectors are male
- Option 0DC: DC to 18 GHz
- Option 003: 300 kHz to 18 GHz
- Option 00A adds:
  - 85054-60037 Type-N (f) to Type-N (f) adapter
  - 85054-60038 Type-N (m) to Type-N (m) adapter

N755xA Economy ECal, 2-ports. Includes:

- N7550A DC to 4 GHz, 2-ports
- N7551A DC to 6.5 GHz, 2-ports
- N7552A DC to 9 GHz, 2-ports
- N7553A DC to 14 GHz, 2-ports
- N7554A DC to 18 GHz, 2-ports
- Option NFF: Both Type-N connectors are female
- Option NMF: One female and one male connector, both Type-N
- Option NMM: Both Type-N connectors are male
- Option 150: Plastic storage box
- N7550X-152: Type-N torque wrench

N756xA Series Multiport ECal

- N7562A: DC to 9 GHz, 3.5 mm or Type-N connectors (female), 6-ports
- N7562AEP: DC to 9 GHz, 3.5 mm or Type-N connectors (female), 12/18/24/30/36-ports

N7560X (Accessories for N756xA Multiport ECal)

- Option 001: RF semi-rigid cable
- Option 002: RF semi-rigid cable for horizontal connection
- Option 003: USB 3.0 cable Type-A and Type-C dual screw locking, 2 m
- Option 150: Plastic storage box
- Option 701: Mounting bracket
- Option 702: Bracket horizontal connection
- Option 703: Stand plate
- Option 704: RF semi-rigid cable guard

Adapter sets

- 11853A 50 Ω Type-N accessory kit. Includes:
  - 1250-1472 Type-N (f) to Type-N (f) adapter (two included)
  - 1250-1475 Type-N (m) to Type-N (m) adapter (two included)
  - 11511A Type-N (f) short
  - 11512A Type-N (m) short
- 11878A Type-N to 3.5 mm adapter kit. Includes:
  - 1250-1744 3.5 mm (f) to 50 Ω Type-N (m) adapter
  - 1250-1743 3.5 mm (m) to 50 Ω Type-N (m) adapter
  - 1250-1745 3.5 mm (f) to 50 Ω Type-N (f) adapter
  - 1250-1750 3.5 mm (m) to 50 Ω Type-N (f) adapter

- 11524A 7 mm to Type-N (f) adapter
- 11525A 7 mm to Type-N (m) adapter
- 85130C 3.5 mm to Type-N Includes:
  - 85054-60029 3.5 mm to Type-N (f)
  - 85054-60030 3.5 mm to Type-N (m)

For Devices with 7 mm Connectors

Mechanical calibration kits

85050B standard: DC to 18 GHz. Includes:

- 00909-60008 7 mm coax termination
- 85050-60006 7 mm fixed broadband load
- 85050-80007 7 mm short
- 85050-80010 7 mm open
- 85050-80011 7 mm sliding load

85050C precision TRL: DC to 18 GHz. Includes:

- 00909-60008 7 mm coax termination
- 85050-60003 7 mm to 7 mm airline
- 85050-60005 7 mm to 7 mm TRL adapter
- 85050-60006 7 mm fixed broadband load
- 85050-80008 7 mm short
- 85050-80009 7 mm short with collect
- 85050-80010 7 mm open

85050D economy: DC to 18 GHz. Includes:

- 85050-60006 7 mm fixed broadband load
- 85050-80007 7 mm short
- 85050-80010 7 mm open

Electronic calibration kits

85091D RF ECal, DC or 300 kHz to 9 GHz, 7 mm, 2-ports. Includes:

- Option 003: 300 kHz to 9 GHz
- Option 0DC: DC to 9 GHz

N4696D Microwave ECal, DC or 300 kHz to 18 GHz, 7 mm, 2-ports. Includes:

- Option 0DC: DC to 18 GHz
- Option 003: 300 kHz to 18 GHz

For Devices with 4.3-10 Connectors

Electronic calibration kits

85094D RF ECal, DC or 300 kHz to 9 GHz, 4.3-10, 2-ports. Includes:

- Option 003: 300 kHz to 9 GHz
- Option 0DC: DC to 9 GHz
- Option 00A: Add two 4.3-10 adapters (one male-male, one female-female)
- Option 00F: Both 4.3-10 connectors are female on module
- Option 00M: Both 4.3-10 connectors are male on module
- Option M0F: One female and one male connector, both 4.3-10

85094D-xxx mixed-connector options

Port A Option			Port B Option		
Connector Type	**Female**	**Male**	**Connector Type**	**Female**	**Male**
4.3-10	107	108	Type-N	203	204
			7-16	205	206
			3.5 mm	201	202

For Devices with 7-16 Connectors

Electronic calibration kits

85098D RF ECal, DC or 300 kHz to 7.5 GHz, 7-16, 2-ports. Includes:

- Option 003: 300 kHz to 7.5 GHz
- Option 0DC: DC to 7.5 GHz
- Option 00A: Add two 7-16 adapters (one male-male, one female-female)
- Option 00F: Both 7-16 connectors are female on module
- Option 00M: Both 7-16 connectors are male on module
- Option M0F: One female and one male connector, both 7-16

85098D-xxx mixed-connector options

Port A Option			Port B Option		
Connector Type	**Female**	**Male**	**Connector Type**	**Female**	**Male**
7-16	105	106	Type-N	203	204
			4.3-10	207	208
			3.5 mm	201	202

For Devices with Waveguide

Mechanical calibration kits

X-Band

X11644A standard, WR-90: 8.2 to 12.4 GHz. Includes:

- 00896-60008 X-band standard section
- 00910-60003 X-band termination
- 11644-20018 X-band short
- 11644-20021 X-band shim
- X281C adapter (included in calibration kit): WR-90 to 7 mm

P Band

P11644A standard, WR-62: 12.4 to 18 GHz. Includes:

- 00896-60007 P-band standard section
- 00910-60002 P-band termination
- 11644-20017 P-band short
- 11644-20020 P-band shim
- P281C adapter (included in calibration kit): WR-62 to 7 mm

K Band

K11644A standard, WR-42: 18 to 26.5 GHz. Includes:

- 00896-60006 K-band standard section
- 00910-60001 K-band termination
- 11644-20016 K-band short
- 11644-20019 K-band shim
- K281C adapter (included in calibration kit): WR-42 to 3.5 mm (f) Option 012 WR-42 to 3.5 mm (m)

R Band

R11644A standard, WR-28: 26.5 to 40 GHz. Includes:

- 00914-20028 R-band termination
- 11644-20005 R-band short
- 11644-20003 R-band shim
- 11644-60001 R-band 10 cm straight waveguide
- 11644-60016 R-band 5 cm straight waveguide

Q Band

Q11644A standard, WR-22: 33 to 50 GHz. Includes:

- 11644-60005 Q-band termination
- 11644-20004 Q-band short
- 11644-20001 Q-band shim
- 11644-60002 Q-band 10 cm straight waveguide
- 11644-60017 Q-band 5 cm straight waveguide

U Band

U11644A standard, WR-19: 40 to 60 GHz. Includes:

- 11644-60006 U-band termination
- 11644-20004 U-band short
- 11644-20002 U-band shim
- 11644-60003 U-band 10 cm straight waveguide
- 11644-60018 U-band 5 cm straight waveguide

Verification Kits

All Keysight verification kits include:

- Precision Z0 airline or match thru
- Mismatched airline or mismatch thru
- Fixed attenuators (except 85059V)
- Traceable measured data and uncertainties

85051B 45 MHz to 18 GHz 7 mm kit

Includes attenuators, airline, and mismatch airline with data on a USB drive for use in confirming calibrated system performance, traceable to national standards. Test procedure is provided in the service manual.

85053B 300 kHz to 26.5 GHz 3.5 mm kit

Includes attenuators, airline, and mismatch airline with data on a USB drive for use in confirming calibrated system performance, traceable to national standards. Test procedure is provided in the service manual.

85055A 300 kHz to 18 GHz Type-N kit

Includes attenuators, airline, and mismatch airline with data on a USB drive for use in confirming calibrated system performance, traceable to national standards. Test procedure is provided in the service manual.

85057B 45 MHz to 50 GHz 2.4 mm kit

Includes attenuators, airline, and mismatch airline with data on a USB drive for use in confirming calibrated system performance, traceable to national standards. Test procedure is provided in the service manual.

85058V 45 MHz to 67 GHz 1.85 mm kit

Includes attenuators, airline, and mismatch airline with data on a USB drive for use in confirming calibrated system performance, traceable to national standards. Test procedure is provided in the service manual.

Combiners

Combiners (hybrid power dividers) for two-tone IMD measurements

- 87302C (0.5 GHz to 26.5 GHz)
- 87303C (1 GHz to 26.5 GHz)
- 87304C (2 GHz to 26.5 GHz)

CalPod Calibration Refresh Modules (8553xB/4xB)

CalPod calibration refresh modules allow in-situ calibration refreshes to be performed at the push of a button without removing the DUT or re-connecting calibration standards. CalPods are designed for any measurement situation where it is desirable to ensure that a valid calibration is present before recording measurement data. For example, they are useful for removing environmental effects such as cable movement and thermal-based changes of cables, connectors, and adapters, as well as connector and switch-matrix repeatability errors. The modules are especially useful in temperature, or thermal-vacuum chamber testing. CalPod modules are equipped with 2.92 mm connectors.

- 85530B 20 GHz ambient-temperature CalPod
- 85531B 20 GHz temperature-compensated CalPod
- 85532B 20 GHz thermal-vacuum compatible CalPod
- 85540B 40 GHz ambient-temperature CalPod
- 85541B 40 GHz temperature-compensated CalPod
- 85542B 40 GHz thermal-vacuum compatible CalPod
- 85523B CalPod controller (provides control for up to 4 CalPods)
- 85556A CalPod drive-cable splitter (allows control for up to 12 CalPods)
- 85554A CalPod drive cable extension (10-meter cascadable extension cable)

System Requirements

Requirement	Description
Operating systems	Windows 10 and Windows 11 (64-bit)
Recommended CPU	Intel Core i7 10th Generation or later recommended
Available memory	16 GB recommended, 4 GB minimum
Available disk space	4 GB minimum
Display resolution	1024 x 768 minimum
Keysight IO Libraries	Keysight IO Libraries Suite 2025 Update 1 (21.2.207) or later

Confidently Covered by Keysight Services

Prevent delays caused by technical questions and reduce system downtime due to instrument maintenance and repairs with Keysight Services. Keysight Services are here to support your test needs with expert technical support, instrument repair and calibration, software support, training, alternative acquisition program options, and more.

A KeysightCare agreement provides dedicated, proactive support through a single point of contact for instruments, software, and solutions. KeysightCare covers an extensive group of instruments, application software, and solutions and ensures optimal uptime, faster response, faster access to experts, and faster resolution.

Keysight Services

Offering	Benefits
KeysightCare 	KeysightCare provides elevated support for Keysight instruments and software, with access to technical support experts that respond within a specified time and ensure committed repair and calibration turnaround times (TAT). KeysightCare offers multiple service agreement tiers, including KeysightCare Assured, Enhanced, and Application Software Support. See the KeysightCare data sheet for details.
KeysightCare Assured	KeysightCare Assured goes beyond basic warranty with repair services that include committed TAT and unlimited access to technical experts.
KeysightCare Enhanced	KeysightCare Enhanced includes all the benefits of KeysightCare Assured plus Keysight's accurate and reliable Calibration Services, accelerated, and committed TAT, and technical response.
Keysight Support Portal & Knowledge Center	All KeysightCare tiers include access to the Keysight Support Portal where you can manage support and service resources related to your assets such as service requests, and status, or browse the Knowledge Center.
Education Services	Build confidence and gain new skills to make accurate measurements, with flexible Education Services developed by Keysight experts. Including Start-up Assistance.
Alternative Acquisition Options	
KeysightAccess	Reduce budget challenges with a leased-based subscription service, that offers low monthly payments, enabling you to get the instruments, software, and technical support you want for your test needs.

Recommended Services

Maximize your test system up-time by securing technical support, repair, and calibration services with committed response and turnaround times. 1-year KeysightCare Assured is included in every new instrument purchase. Obtain multi-year KeysightCare upfront to eliminate the need for lengthy and tedious paperwork and yearly requests for maintenance budget. Plus, you benefit from secured service for 2, 3, or 5 years.

Service	Function
KeysightCare Enhanced*	**Includes Tech Support, Warranty and Calibration**
R-55B-001-1	KeysightCare Enhanced – Upgrade 1 year
R-55B-001-2	KeysightCare Enhanced – Extend to 2 years
R-55B-001-3	KeysightCare Enhanced – Extend to 3 years (Recommended)
R-55B-001-5	KeysightCare Enhanced – Extend to 5 years (Recommended)
KeysightCare Assured	**Includes Tech Support and Warranty**
R-55A-001-2	KeysightCare Assured – Extend to 2 years
R-55A-001-3	KeysightCare Assured – Extend to 3 years
R-55A-001-5	KeysightCare Assured – Extend to 5 years
Start-Up Assistance	
PS-S40-01	Included – instrument fundamentals and operations starter
PS-S40-04	Recommended – instrument fundamentals and operations starter

* Available in select countries. For details, please view the datasheet. R-55B-001-2/3/5 must be ordered with R-55B-001-1.

Literature Information

Keysight M980xA Series PXIe Vector Network Analyzer – Data Sheet, 5992-3596EN

Keysight M983xA Series PXIe Vector Network Analyzer – Data Sheet, 3122-2129.EN

Keysight PXIe Vector Network Analyzers – Product Fact Sheet, 3122-2110.EN

Keysight Vector Network Analyzer – Selection Guide, 5989-7603EN

Electric Calibration (ECal) Modules – Technical Overview, 5963-3743E

Web Resources

Keysight PXI Vector Network Analyzer: www.keysight.com/find/pxivna

Keysight Vector Network Analyzers: www.keysight.com/find/na

Vector Network Analyzer Software: www.keysight.com/find/vnasoftware

Calibration Modules and Kits: www.keysight.com/find/ecal

Keysight enables innovators to push the boundaries of engineering by quickly solving design, emulation, and test challenges to create the best product experiences. Start your innovation journey at www.keysight.com.

This information is subject to change without notice. © Keysight Technologies, 2019 – 2026, Published in USA, May 29, 2026, 5992-3597EN