N5290A / N5291A Millimeter-Wave Broadband Vector Network Analyzer Solutions

Introduction

This guide describes configurations for N5290A and N5291A 110 GHz/120 GHz broadband millimeter-wave Vector Network Analyzer (VNA) system with using N52xxB PNA/PNA-X network analyzers and N5293/5Ax frequency extenders, and accessory information. Both N5290A and N5291A systems come fully configured with hardware and options to enable broadband S-parameter measurements. Additional measurement application software can be added to the basic configurations. This document will focus on the system architecture and describe the various application solutions and available accessories. In addition, it will provide information about configuring a broadband VNA using separate system components.



KEYSIGHT

Table of Contents

N5290A/N5291A Broadband VNA System Configurations.....3

Customized Broadband VNA Configuration.....11

Measurement Applications.....19

Measurement Accessories.....21

General Accessories.....23

N5290A/N5291A Broadband VNA System Configurations

Model		Description
N5290A		4-port millimeter-wave network analyzer 900 Hz (500 Hz) to 110 GHz
		2-port millimeter-wave network analyzer 900 Hz (500 Hz) to 110 GHz
N5291A		4-port millimeter-wave network analyzer 900 Hz (500 Hz) to 120 GHz (125 GHz)
		2-port millimeter-wave network analyzer 900 Hz (500 Hz) to 120 GHz (125 GHz)

Supported N5290/91A System Components

N5290/91A Supported PNA/PNA-X Hardware

PNA/PNA-X	Frequency Coverage	Test Set Configuration
N5222B	900 Hz to 26.5 GHz	2-port with Option 205
N5227B	900 Hz to 67 GHz	2-port with Option 205
N5242B	900 Hz to 26.5 GHz	4-port with Option 425
N5242B	900 Hz to 26.5 GHz	4-port with Options 425, 029
N5247B	900 Hz to 67 GHz (70 GHz)	4-port with Options 425, 029

N5290/91A system supported millimeter wave test set controller configurations: The N5290A and N5291A systems include either a 2-port (Option 20x) or a 4-port (Option 40x) and includes the following interconnect kit options.

N5292A Test Options/Interconnect Cable Options

PNA/PNA-X Models		2-Port Test Set Controller (N5292A Option 200)	4-Port Test Set Controller (N5292A Option 400)
2-port PNA	N5222B	Option 222 Interconnect kit for 2-port test set and 2-port VNA with 3.5 mm ports	N/A
	N5227B	Option 224 Interconnect kit for 2-port test set and 2 -port VNA with 2.4 mm or 1.85 mm ports	N/A
4-port PNA-X	N5242B	N/A	Option 442 Interconnect kit for 4-port test set and 4-port VNA with 3.5 mm ports
	N5247B	N/A	Option 444 Interconnect kit for 4-port test set and 4 -port VNA with 2.4 mm or 1.85 mm ports

N5290/91A System Supported Millimeter-Wave Frequency Extenders

PNA/PNA-X	Frequency Coverage	Bias Tee Configuration	Cable Length
N5293AX03	900 Hz to 110 GHz	Low frequency bias combiner with built-in 50 V 1A bias tee	1.2 m cable
N5295AX03	900 Hz to 120 GHz	Low frequency bias combiner with built-in 50 V 1A bias tee	1.2 m cable

Note: When using the bias-tees on N529xAX03 frequency extender modules, users may see errors for measurements below 100 MHz. This is due to the interaction between the built-in LFE bias combiner, and the output match of the DC-bias supply being used. Users may need either an external bias tee or build an impedance matching network to eliminate the matching issue.

N5290A Pre-Configured Systems

The N5290A system comes preconfigured and will operate from 900 Hz to 110 GHz and it includes five different options. Each option below comes with either a 2- or 4-port PNA or PNA-X, the N5292A millimeter wave test set controller for 2- or 4-port measurements, and the N5293AX03 110 GHz frequency extenders. The system includes all the interconnect cables required to connect the PNA or PNA-X to the controller.

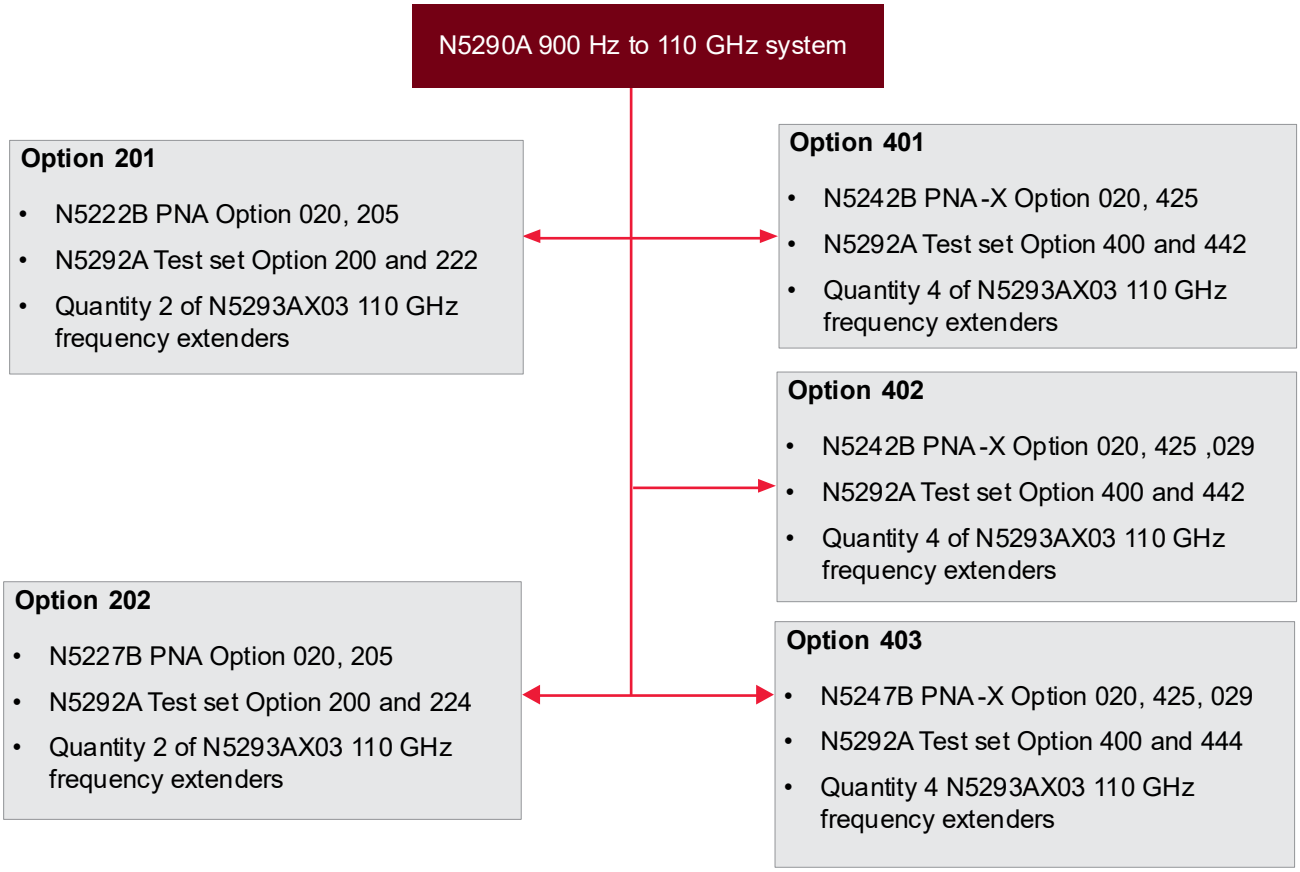

Note: For details or to add other PNA or PNA-X options to the above listed minimum configuration, please refer to the "PNA Family Microwave Network Analyzers (N522x/3x/4xB) - Configuration Guide".

Key Features of the N5290A

- Standard frequency range 900 Hz to 110 GHz
- Extended frequency range of 500 Hz to 110 GHz
- Max output power limited to 0 dB from 90 GHz to 110 GHz
- Built in 50 V, 1A Kelvin Bias Tee
- Magnitude stability of ± 0.015 dB over 24 hours across the frequency range
- Phase stability of ± 0.15 degrees over 24 hours across the frequency range
- Available in 2-port and 4-port configurations
- Compact module design N5293AX03, with no cooling fans
- Smart modules with built-in thermal management
- Factory calibrated source power at 1.0 mm port
- On wafer fixturing for existing Cascade probe stations
- Ruggedized IEEE 1287-2007 standards compliant 1.0 mm test port connector
- System level specifications are supplied

N5291A Pre-Configured Systems

The N5291A system comes preconfigured and operates from 900 Hz to 120 GHz and it includes five different options. Each option below comes with either a 2- or 4-port PNA or PNA-X, the N5292A millimeter wave test set controller for 2- or 4-port measurements, and the N5295AX03 120 GHz frequency extenders. The system includes all the interconnect cables required to connect the PNA or PNA-X to the controller.

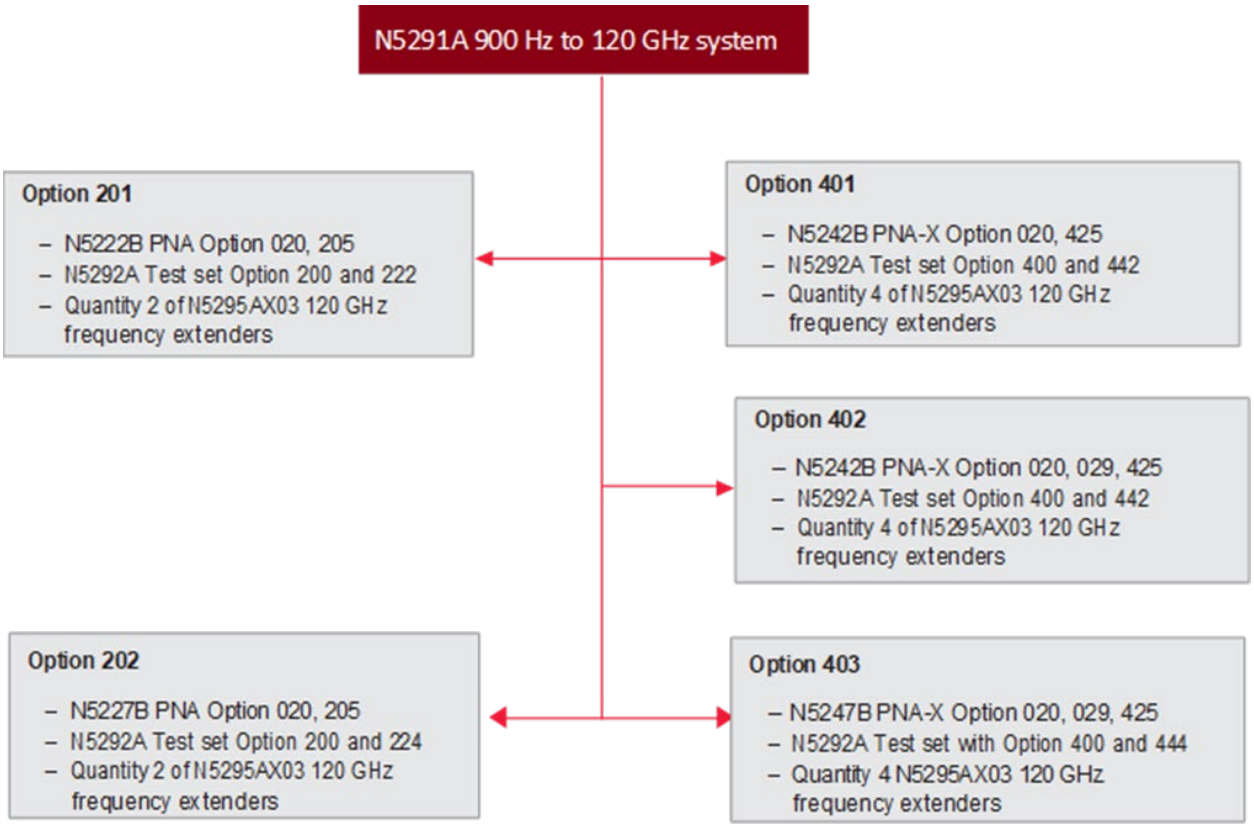

Note: For details or to add other PNA or PNA-X options to the above listed minimum configuration, please refer to the "PNA Family Microwave Network Analyzers (N522x/3x/4xB) - Configuration Guide"

Key Features of the N5291A

- Standard frequency range 900 Hz to 120 GHz
- Extended frequencies 500 Hz to 125 GHz
- Max output power greater then 1 dBm (6 dBm typical) at 110 GHz
- Built in 50 V, 1A Kelvin Bias Tee
- Magnitude stability of ± 0.015 dB over 24 hours across the frequency range
- Phase stability of ± 0.15 degrees over 24 hours across the frequency range
- Available in 2-Port and 4-Port configurations
- Compact module design N5295AX03, with no cooling fans
- Smart modules with built-in thermal management
- Factory calibrated source power at 1.0 mm port
- On wafer fixturing for existing Cascade probe stations
- Ruggedized IEEE 287-2007 standards compliant 1.0 mm test port connector
- System level specifications are supplied

System Block Diagrams

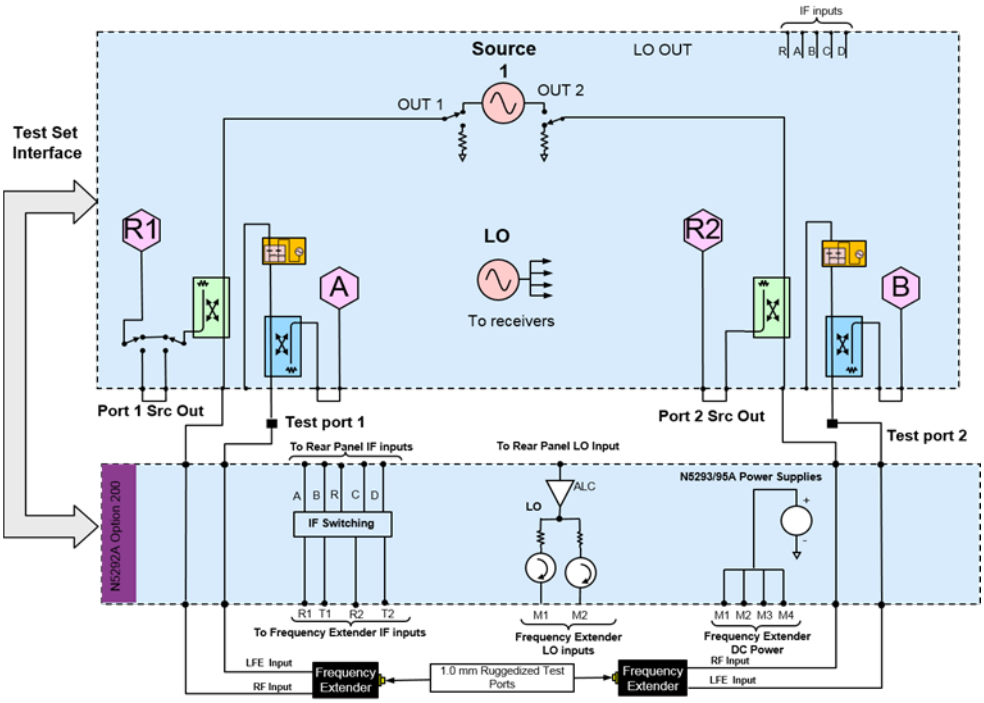

N5290/91A Option 201 System level block diagram (N5222B with Option 205)

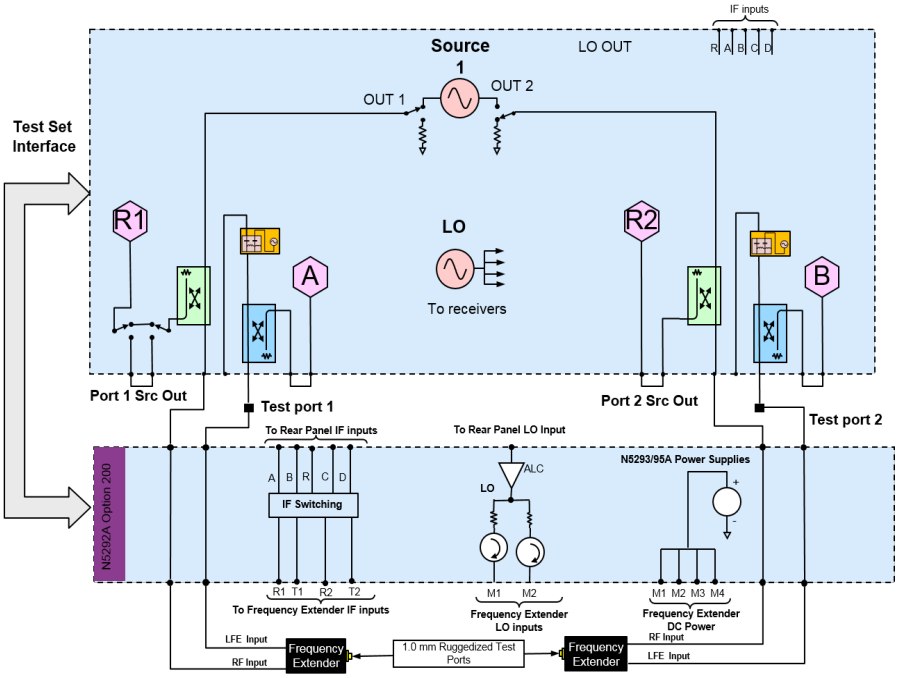

N5290/91A Option 202 System level block diagram (N5227B with Option 205)

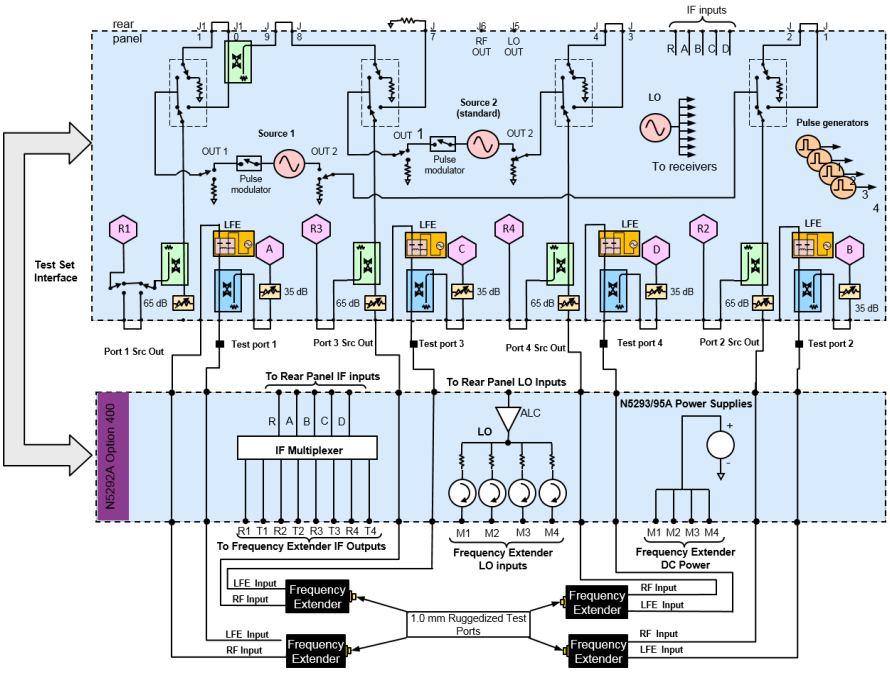

N5290/91A Option 401 System level block diagram (N5242B with Option 425)

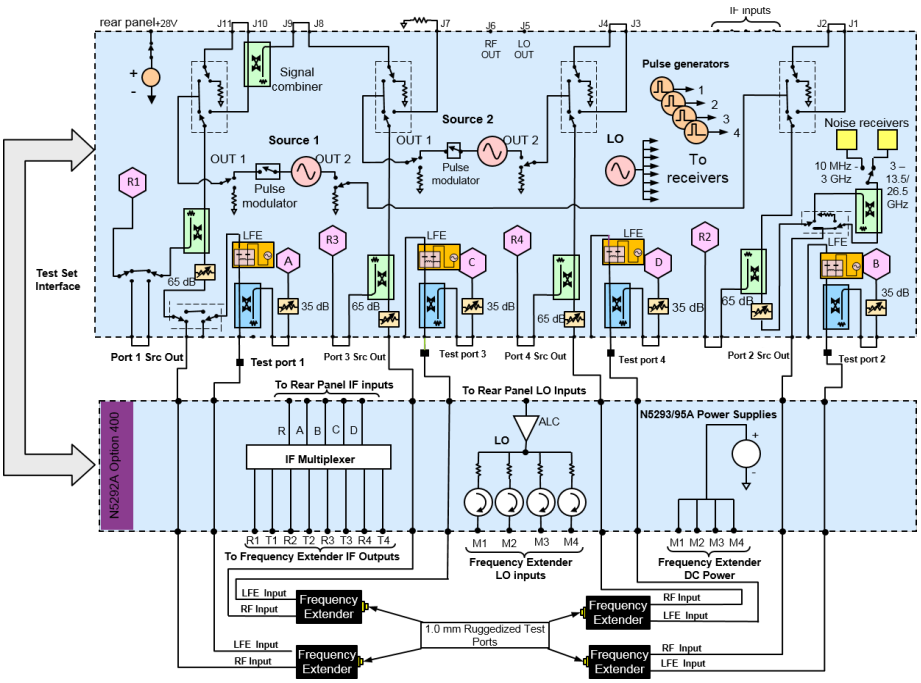

N5290/91A Option 402 System level block diagram (N5242B with Option 425, 029)

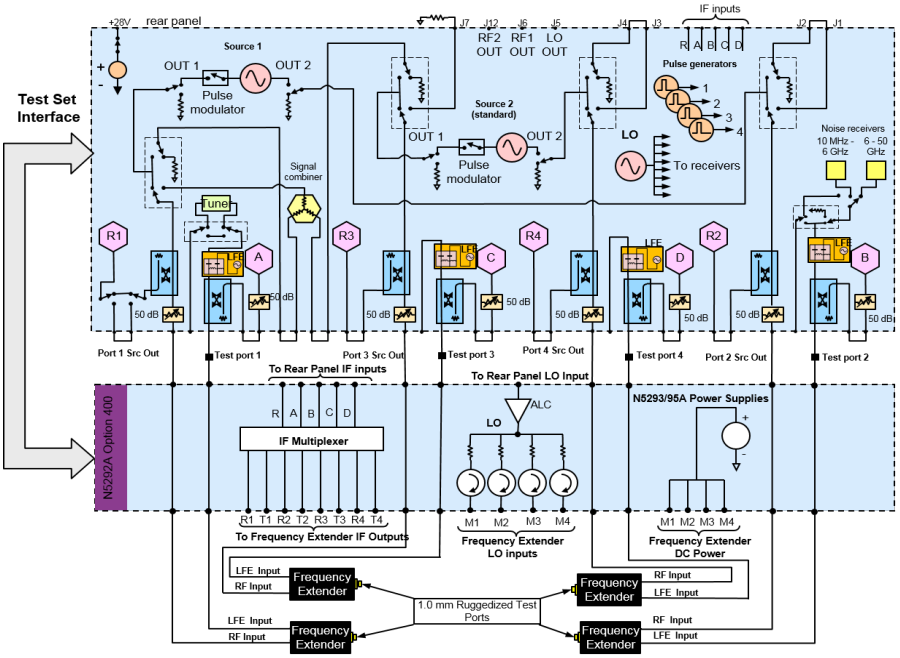

N5290/91A Option 403 System level block diagram (N5247B with Option 425, 029)

Customized Broadband VNA Configuration

To configure a customized broadband solution using separate system components, follow these three simple steps:

- Select one of the PNA or PNA-X models in the tables below
- Select the N5292A test set with the correct interconnect cable options
- Select the N5293AX or N5295AX frequency extender

The performance of the individual products is guaranteed to have all of the functionality of those in the pre-configured N5290A/91A system, but system level specifications are not supplied for all configurations.

System level specifications will only apply when the exact same products as the component products of the pre-configured N5290A/91A system are purchased separately and assembled into a system and calibrated as the system. The system level calibration service at a service center is available for purchase.

Refer to the page 7 of the N5290A data sheet and the N5291A data sheet about system level specifications and typical data.



Step 1: Supported PNA Configurations

Product/Option [1, 2]	Description	Low Frequency Extension
N5222B-201	26.5 GHz 2-port PNA with configurable test set option	Option 205 [3]
N5222B-401	26.5 GHz 4-port PNA with configurable test set option	Option 405 [3]
N5224B-201	43.5 GHz 2-port PNA with configurable test set option	Option 205 [3]
N5224B-401	43.5 GHz 4-port PNA with configurable test set option	Option 405 [3]
N5225B-201	50 GHz 2-port PNA with configurable test set option	Option 205 [3]
N5225B-401	50 GHz 4-port PNA with configurable test set option	Option 405 [3]
N5227B-201	67 GHz 2-port PNA with configurable test set option	Option 205 [3]
N5227B-401	67 GHz 4-port PNA with configurable test set option	Option 405 [3]

Supported PNA-X Configurations

Product/Option [1, 2]	Description	Low Frequency Extension
N5242B-201	26.5 GHz 2-port PNA-X with configurable test set option	Option 205 [3]
N5242B-401	26.5 GHz 4-port PNA-X with configurable test set option	Option 425 [3]
N5244B-201	43.5 GHz 2-port PNA-X with configurable test set option	N/A
N5244B-401	43.5 GHz 4-port PNA-X with configurable test set option	Option 425 [3]
N5245B-201	50 GHz 2-port PNA-X with configurable test set option	N/A
N5245B-401	50 GHz 4-port PNA-X with configurable test set option	Option 425 [3]
N5247B-201	67 GHz 2-port PNA-X with configurable test set option	N/A
N5247B-401	67 GHz 4-port PNA-X with configurable test set option	Option 425 [3]

1. All PNA/PNA-X models require Option 020, and all hardware options listed are the minimum required hardware options.
2. N52xxB models upgraded from N52xxA models may require a source module upgrade for proper millimeter-wave operation. Please contact Keysight for additional information.
3. Options 205/425 allow the millimeter wave system to have a start frequency of 900 Hz.

For details or to add other PNA or PNA-X options to the above listed minimum configuration please refer to the "PNA Family Microwave Network Analyzers (N522x/3x/4xB) - Configuration Guide".

Step 2: N5292A Millimeter-Wave Test Controllers



N5292A Millimeter wave test set controller (Option 200)



N5292A Millimeter wave test set controller (Option 400)

Measurement Configuration	N5292A Option Required
2-port millimeter wave measurements	Option 200
4-port millimeter wave measurements	Option 400

In addition, choose the appropriate test set controller interconnect option from the table below.

N5292A Test Options/Interconnect Cable Options

PNA/PNA-X Models		2-Port Test Set Controller (N5292A Option 200)	4-Port Test Set Controller (N5292A Option 400)
2-port PNA/ PNA-X	N5222B N5242B	Option 222 Interconnect kit for 2-port test set and 2-port VNA with 3.5 mm ports	Option 422 Interconnect kit for 4-port test set and 2-port VNA with 3.5 mm ports
	N5224B N5244B N5225B N5245B N5227B N5247B	Option 224 Interconnect kit for 2-port test set and 2-port VNA with 2.4 mm or 1.85 mm ports	Option 424 Interconnect kit for 4-port test set and 2-port VNA with 2.4 mm or 1.85 mm ports
4-port PNA/ PNA-X	N5222B N5242B	Option 242 Interconnect kit for 2-port test set and 4-port VNA with 3.5 mm ports	Option 442 Interconnect kit for 4-port test set and 4-port VNA with 3.5 mm ports
	N5224B N5244B N5225B N5245B N5227B N5247B	Option 244 Interconnect kit for 2-port test set and 4-port VNA with 2.4 mm or 1.85 mm ports	Option 444 Interconnect kit for 4-port test set and 4-port VNA with 2.4 mm or 1.85 mm ports

Step 3: N5293/5A Millimeter-Wave Frequency Extender

	Max Frequency 120 GHz		Max Frequency 110 GHz	
Configurations	**1.2 m Cable**	**1.8 m Cable**	**1.2 m Cable**	**1.8 m Cable**
No bias (lowest frequency 10 MHz)	N5295AX01	N5295AX51	N5293AX01	N5293AX51
Pulsed bias (lowest frequency 10 MHz)	N5295AX02	N5295AX52	N5293AX02	N5293AX52
LFE with bias (lowest frequency 900 Hz)	N5295AX03	N5295AX53	N5293AX03	N5293AX53
Direct receiver access, No bias (lowest frequency 10 MHz)	N5295AY01	N5295AY51	N5293AY01	N5293AY51
Direct receiver access, Pulsed bias (lowest frequency 10 MHz)	N5295AY02	N5295AY52	N5293AY02	N5293AY52
Direct receiver access, LFE with bias (lowest frequency 900 Hz)	N5295AY03	N5295AY53	N5293AY03	N5293AY53



N5293/5AX Millimeter-wave frequency extender



N5293/5AY Millimeter-wave frequency extender

N5293/5AY models provide direct receiver access ports and enable more complex measurements such as high-power amplifier measurements using a booster amplifier, broadband Vector Component Analysis (VCA) with modulated signals, noise figure measurements using external switched LNA (e.g., U7229M)

The N5293AXxx frequency extenders can be upgraded to the N5293/5AYxx with N5293/5AUYxx upgrade models

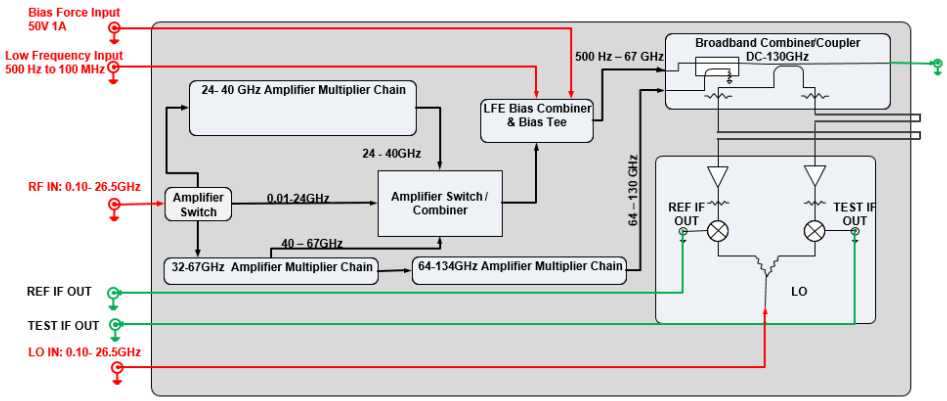

Simplified N5293/5AY extender block diagram

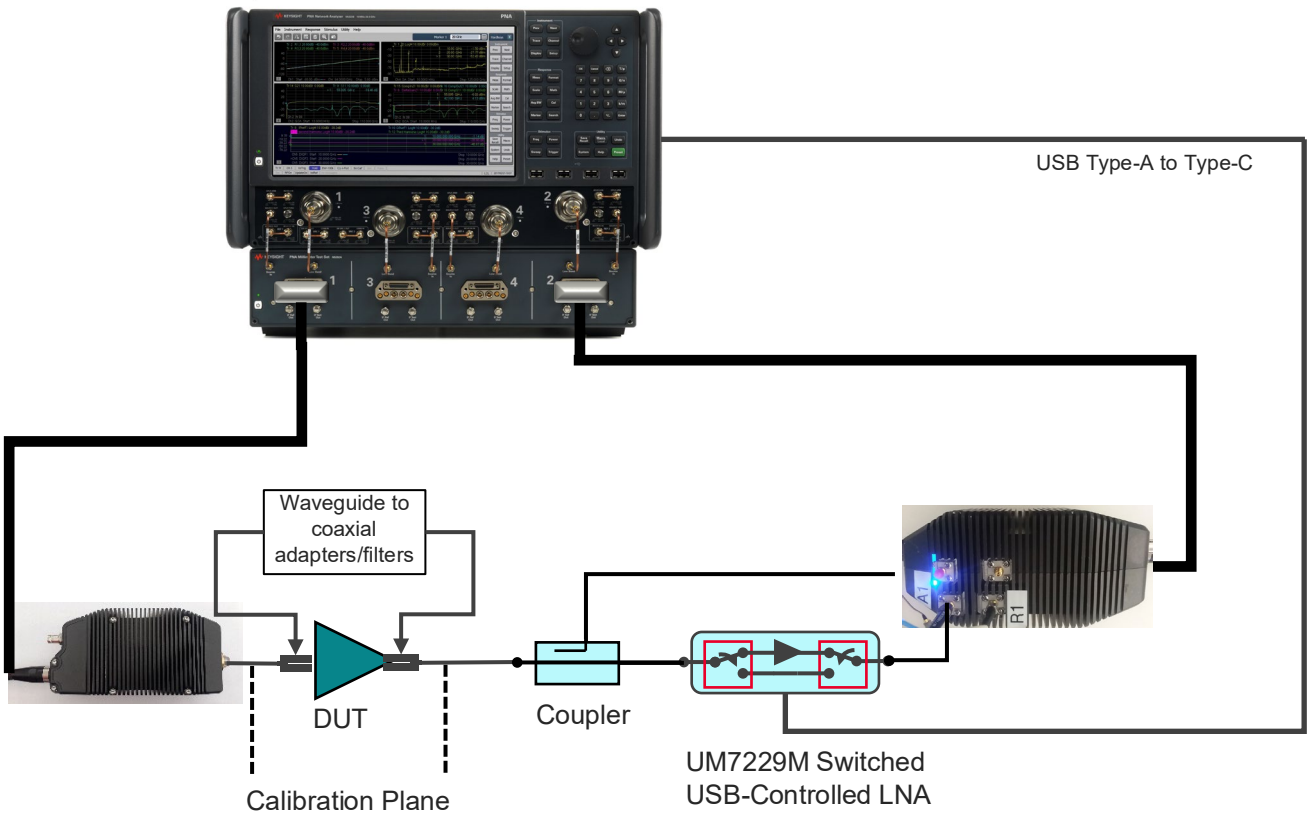

Noise figure measurement setup example

Note: When using the bias-tees on N529xAX03/53 frequency extender modules (up to 1A), users may see errors for measurements below 100 MHz. This is due to the interaction between the built-in LFE bias combiner and the output match of the DC-bias supply being used. To eliminate the matching issue, users may need either an external bias tee, an impedance matching network, or a decoupling device.

These two decoupling devices are available for purchase.

- N5290A-K01 Decoupling circuit to improve source match down to 10 kHz (up to 1A)
- N5290A-K02 Decoupling circuit to improve source match down to 1 kHz (up to 200 mA)

PNA and PNA-X Frequency Extension Upgrade Bundle Models

These two models are bundle solutions available for you to extend the frequency of your own PNA or PNA-X with configurable test set with the N5292A test set controller and N5293AX or N5295AX frequency extenders to 110 GHz or 120 GHz (125 GHz) with a discount.

You can choose the N5292A and the N5293/5AXxx frequency extenders and some optional items.

For more information about these bundle products, please contact your Keysight sales representative.

2-port PNA Broadband Upgrade

Item	Description	Quantity
N5292AF	PNA, 2-Port mmWave upgrade bundle	1
N5292A	Millimeter-wave test set controller	1
N5292A-2xx	Test set Controller, 2 port	1
N5293AXxx or N5295Axx	Frequency extender, 110 GHz or 120 GHz	2
85059B	Precision calibration kit, 1 mm	1
Optional Items		
Y1900B	Adapter, 1.0 mm ruggedized (f) to 1.0 mm (f), DC	1
11500JK10	110 GHz, 1.0 mm (m-f) Test Port Cable 10 cm	2
U8489A	U8489A power sensor; USB	1
N5290A301	Frequency extender bias tee adapter kit	2
N5290A302	Frequency extender desktop positioner	2

4-port PNA Broadband Upgrade

Item	Description	Quantity
N5292AG	PNA, 4-Port mmWave upgrade bundle	1
N5292A	Millimeter-wave test set controller	1
N5292A-4xx	Test set Controller, 2 port	1
N5293AXxx or N5295Axx	Frequency extender, 110 GHz or 120 GHz	4
85059B	Precision calibration kit, 1 mm	1
Optional Items		
Y1900B	Adapter, 1.0 mm ruggedized (f) to 1.0 mm (f), DC	1
11500JK10	110 GHz, 1.0 mm (m-f) Test Port Cable 10 cm	4
U8489A	U8489A power sensor; USB	1
N5290A301	Frequency extender bias tee adapter kit	4
N5290A302	Frequency extender desktop positioner	4

Configuring VDI Banded Vector Network Analyzer with VDI Frequency Extenders

In addition to supporting the broadband frequency extenders from Keysight the N5292A test set controller may be configured to drive Keysight supported frequency extenders from VDI.

For a complete listing of supported frequency extenders available, please refer to the "Banded Millimeter Wave Network Analysis - Technical Overview".

To interface the OML and VDI modules to the N5292A, add an N5290A304 for each VDI module to the configuration of the N5290/91A. This cable adapter includes a 1.2 m length cable with an interface to the N5292A and 3.5 mm (m) connectors for the RF, LO and IF connection to the frequency extenders. If you need longer than 1.2 m, you can use an N5260/2AKCBL cable kit and four 3.5 mm f-f adapters as the cable extension of the N5290A304.

Product Description	Adapter Cable	Power Supply Requirements
VDI standard frequency extenders only	N5290A304	VDI-175 DC Power supply included
VDI mini frequency extenders	N5290A304	9 V DC Power supply included

Refer to the "Banded Millimeter Wave Network Analysis - Technical Overview".

N5292A with option 400 test set controller and N5295AX frequency extenders can be used for 170 GHz and 220 GHz broadband VNA for on-wafer device measurements. For more information about the broadband VNA configuration, refer to the technical overview, 170 GHz/220 GHz Broadband Vector Network Analysis Solution.

Supported Software Application Options [1]

The following listed software options will operate over the full range of the pre-configured N5290/91A systems.

(Note: The software applications S9xxxxB that are not listed on this list work on the standalone use of the PNA/-X network analyzer only, and you can order the software applications individually.)

For more information, please refer to the "PNA Family Microwave Network Analyzers (N522x/3x/4xB) - Configuration Guide".

N5290/91A Application Software Support Start Frequency

Software Product	Description	900 Hz	10 MHz
S93007B	Automatic fixture removal	Yes	Yes
S93010B	Time domain analysis	Yes	Yes
S93011B	Enhanced time domain analysis	N/A	Yes
S93015B	Dynamic uncertainty for S-parameter measurements	Yes	Yes
S93025B	Basic pulsed-RF measurements	N/A	Yes [2]
S93026B	Advanced pulsed-RF measurements	N/A	Yes [3]
S93029B	Noise figure measurements	N/A	Yes [4]
S93080B	Frequency-offset measurements	Yes	Yes
S930321B	Phase noise measurement up to 125 GHz	N/A	Yes
S93082B	Scalar mixer/converter measurements	Yes	Yes
S93083B	Vector mixer/converter measurements [6]	Yes	Yes
S93084B	Embedded-LO capability	N/A	Yes
S93086B	Gain-compression measurements	Yes	Yes
S93089B	Differential and I/Q device measurements	N/A	Yes [5]
S930909B	Spectrum analysis up to 90 GHz	N/A	Yes
S93093B	Spectrum analysis to 125 GHz	N/A	Yes
S93094B	Spectrum analysis beyond 125 GHz	N/A	Yes
S93118B	Fast CW mode	Yes	Yes
S93460B	True mode stimulus	N/A	Yes [5]
S94602B	DMX limit assistant	Yes	Yes
N1500A	Materials measurement	Yes	Yes
N1930xB	Physical layer test system software (PLTS)	Yes	Yes

1. This software list is not valid for the banded VNA configuration. Please refer to the "Banded Millimeter Wave Network Analysis - Technical Overview".
2. Pulse requires hardware Options 021 (and 022 if the 2nd source is also used) on the PNA/PNA-X.
3. S93026B supports wideband pulse only.
4. Noise figure is supported for down converters.
5. Require 4-port configurations of the N5290/91A.
6. Use a known mixer and information about the delay of the mixer or characterize a mixer using S93089B Differential and I-Q device application, de-embed the mixer, and compensate the delay.

Certification Options

Commercial Calibration Certification with Test Data (Option UK6)

Complete set of measurements which tests unit to manufacturer's published specifications. Includes calibration label, calibration certificate, and data report. Conforms to ISO 9001.

ISO 17025 Compliant Calibration (Option 1A7)

Complete set of measurements which tests unit to manufacturer's published specifications. Includes calibration label, ISO 17025 calibration certificate, and data report, measurement uncertainties and guardbands on all customer specifications. Conforms to ISO 17025 and ISO 9001.

ANSI Z540 Compliant Calibration (Option A6J)

Complete set of measurements which tests unit to manufacturer's published specifications. Includes pre- and post-adjustment data with measurement uncertainty information compliant to the ANSI/NCSL Z540 standard.

Documentation

The PNA Series instruments are equipped with an Online Help system available within the instrument in English only. All PNA documentation is available on the web: www.keysight.com/find/pna

Calibration Software Licenses

Built-in performance test software for standard compliant cal (S93898B) Adds built-in performance testing and calibration software for self-maintainers. Requires additional equipment. See the analyzer's Service Guide for more information on equipment required.

Measurement Applications

On Wafer Applications

To configure the system for use with a Cascade probe station a set of 1.0 mm cables are required as well as a probe positioner. The N5293A module positioner may be obtained directly from FormFactor for the probe station type.

For currently available 1.0 mm cables see the accessories section below.

It is recommended that a 10 cm long, 1.0 mm (m-f) cable be used with the probe positioner on the Summit 12K probe station from FormFactor. This length is optimized for the probe positioner and the Infinity 110 series probes from FormFactor.

170 GHz/220 GHz broadband VNA solutions for on-wafer devices are also available. See Technical Overview, 170 GHz/220 GHz Broadband Vector Network Analysis Solution.

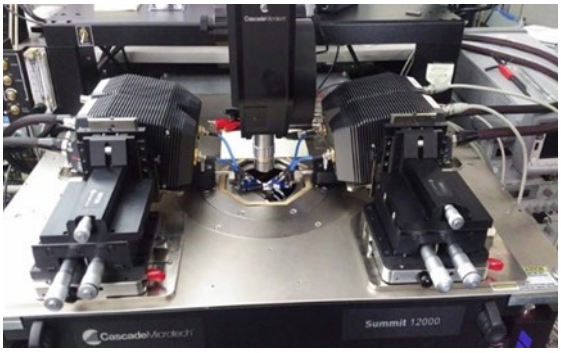

N529xAX Frequency extenders mounted on a Cascade Summit 12K probe station



170/220 GHz broadband VNA solutions

Materials Measurements Solutions

The N5290/91A system can be configured to make material measurements at millimeter wave frequencies. Add the following to the N5290/91A configuration for free space measurements at millimeter wave frequencies.

- N1500A materials measurement suite
- A set of 1.0 mm to either W or V-band adapters, the V281C or W281C listed in the measurement accessories section.
- A set of V or W-band horn antennas
- Thomas Keating quasi optical positioner or a Swiss to 12 corrugated waveguide fixture

N1500A Materials Measurement Suite

The N1500A-001, UL8 materials measurement suite calculates the permittivity and permeability of material samples placed in a coaxial airline or a rectangular waveguide. The measurement technique works well for solid materials that can be machined to fit precisely inside a transmission line. Measurement results can be viewed in a variety of formats (εr', εr", tanδ, μr', μr", tanδμ, and Cole-Cole). The software can be run on the PNA analyzer or on a PC.

For additional information or to configure a solution for materials measurements visit:
www.keysight.com/find/materials

Antenna Measurements Solutions

The broadband N5290/1A single sweep systems are capable of supporting antenna characterization up to 120 GHz without reconfiguring the hardware. Additionally, you can customize the most cost-effective solution specific for your application by purchasing just the module and frequency range you need. For more information, see "Antenna Test - Selection Guide".

Measurement Accessories

The following table lists the currently available accessories that may be used with Keysight's millimeter-wave network analyzer solutions. These accessories are not supplied with the N5290A or N5291A and can be purchased separately.

Accessory Type	Model Number	Description
Calibration kit	85059B	DC to 120 GHz 1.0 mm calibration kit
Verification kit	85059V	1.0 mm verification kit
Power sensors	U8489A	DC to 120 GHz 1.0 mm USB power sensor [1]
	V8486A	50 to 75 GHz waveguide power sensor
	E8486A	60 to 90 GHz waveguide power sensor
	W8486A	75 to 110 GHz waveguide power sensor
Test port cables	11500TK10[2]	120 GHz, 1.0 mm (m-f) test port cable (10 cm)
	11500TK13[2]	120 GHz, 1.0 mm (m-f) test port cable (13 cm)
	11500I	110 GHz, 1.0 mm (f-f) test port cable (8.8 cm)
	11500J	110 GHz, 1.0 mm (m-f) test port cable (16 cm)
	11500K	110 GHz, 1.0 mm (m-f) test port cable (20 cm)
	11500L	110 GHz, 1.0 mm (m-f) test port cable (24 cm)
	11500JK07	110 GHz, 1.0 mm (m-m) test port cable (30.0 cm)
Waveguide adapters	V281C	1.0 mm (f) to V-band waveguide adapter
	V281CS	1.0 mm (f) to V-band waveguide adapter, In-line [3]
	V281D	1.0 mm (m) to V-band waveguide adapter
	V281DS	1.0 mm (m) to V-band waveguide adapter, In-line [3]
	V281ES	Ruggedized 1.0 mm (f) to V-band waveguide adapter, In-line [4]
	E281CS	1.0 mm (f) to E-band waveguide adapter, In-line [3]
	E281DS	1.0 mm (m) to E-band waveguide adapter, In-line [3]
	E281ES	Ruggedized 1.0 mm (f) to E-band waveguide adapter, In-line [4]
	W281C	1.0 mm (f) to W-band waveguide adapter
	W281CS	1.0 mm (f) to W-band waveguide adapter, In-line [3]
	W281D	1.0 mm (m) to W-band waveguide adapter
	W281DS	1.0 mm (m) to W-band waveguide adapter, In-line [3]
	W281ES	Ruggedized 1.0 mm (f) to W-band waveguide adapter, In-line [4]
1.0 mm coaxial adapters	Y1900B	Ruggedized 1.0 mm (f) to 1.0 mm (f) adapter, 120 GHz
	Y1900C	Ruggedized 1.0 mm (f) to 1.0 mm (m) adapter, 120 GHz
	Y1900D	Ruggedized 1.0 mm (f) to Ruggedized 1.0 mm (f) adapter, 120 GHz
	Y1910A	1.0 mm (m) to 1.0 mm (m) adapter, 120 GHz
	Y1910B	1.0 mm (f) to 1.0 mm (f) adapter, 120 GHz
	Y1910C	1.0 mm (m) to 1.0 mm (f) adapter, 120 GHz
1.85 mm coaxial adapters	11921E	1.0 mm (m) to 1.85 mm (m) adapter
	11921F	1.0 mm (f) to 1.85 mm (f) adapter
	Y1901B	Ruggedized 1.0 mm (f) to 1.85 mm (f) adapter
	11921G	1.0 mm (m) to 1.85 mm (f) adapter
	11921H	1.0 mm (f) to 1.85 mm (m) adapter
2.4 mm coaxial adapters	11922A	1.0 mm (m) to 2.4 mm (m) adapter
	11922B	1.0 mm (f) to 2.4 mm (f) adapter
	Y1902B	Ruggedized 1.0 mm (f) to 2.4 mm (f) adapter
	11922C	1.0 mm (m) to 2.4 mm (f) adapter
	11922D	1.0 mm (f) to 2.4 mm (m) adapter
2.92 mm coaxial adapters	Y1903B	Ruggedized 1.0 mm (f) to 2.92 mm (f) adapter
Package launch	11923A	1.0 mm (f) microcircuit connector launch assembly
Wrenches for 1.0 mm adapters/connectors	8710-2819	Dual Torque wrench, 14 mm open end, 4 lb-in (0.45 Nm) and 10 lb-in (1.13 Nm) [5]

1. Recommended for use with N5290/91A millimeter wave network analyzer solution.
2. These cables are supplied by Totoku and recommended for use with the probe positioners on FormFactor's probe station.
3. Supplied by Eravant.
4. Supplied by Spinner.
5. Refer to Keysight Double-Ended Torque Wrench for 1.0 mm Connectors Users Guide for operation instruction.

85059B DC to 120 GHz 1.0 mm Calibration Kit

The 85059B calibration kit includes the following items:

85059B Calibration Components

Male Components		Female Components	
Part Number	**Description**	**Part Number**	**Description**
85059-60027	1.0 mm (m) short, 1.3 mm	85059-60028	1.0mm (f) short, 1.3 mm
85059-60029	1.0 mm (m) short, 2.45 mm	85059-60030	1.0 mm (f) short, 2.45 mm
85059-60031	1.0 mm (m) short, 3.326 mm	85059-60032	1.0 mm (f) short, 3.326 mm
85059-60033	1.0 mm (m) short, 4.039 mm	85059-60034	1.0 mm (f) short, 4.039 mm
85059-60053	1.0 mm (m) open	85059-60054	1.0 mm (f) open
85059-60019	1.0 mm (m) 50 GHz load	85059-60020	1.0 mm (f) 50 GHz load
85059B 1.0 mm Adapters			
85059-60044	1.0 mm m-m adapter	85059-60045	1.0 mm f-f adapter
85059-60046	1.0 mm m-f adapter		
85059B Torque Wrench			
8710-2812	6 mm 4 in-lb torque wrench	8710-2813	14 mm 4 in-lb torque wrench
8710-2156	6 mm open-end wrench		



85059V 1.0 mm Verification Kits



85059V DC to 120 GHz 1.0 mm kit includes:

- A matched adapter (85059-60048)
- A mismatch adapter (85059-60047)
- A USB drive with data and uncertainty for the matched and mismatch devices in the kit

When used with Keysight's system verification software it provides a confirmation that the system calibration meets the performance specifications and is traceable to National Standards.

U8489A 120 GHz USB Power Sensor



- Thermocouple based 120 GHz power sensor
- Covers a frequency range of DC to 120 GHz
- Power measurements from -35 dBm to + 20 dBm
- Ruggedized 1.0 mm male connector
- USB connector to interface directly with PNA/PNA-X

The N5290/91A millimeter-wave solutions read the built-in calibration factors of the sensors. This allows users to calibrate the power at the 1.0 mm test port with a single sweep from 900 Hz to 120 GHz.

General Accessories

In addition to the measurements accessories there are additional general accessories that are also available. These accessories help improve connectivity of the 1.0 mm test port to calibration devices and the test port cables. In addition, we offer transportation case for the N5293A or N5295A.

These accessories do not come standard with the N5290/91A except for the transportation case for the N5293/95A.

Model / Part Number	Description
N5290A301	Frequency extender bias tee adapter kit
N5290A302	Frequency extender desktop positioner
N5290A303/T03	Broadband frequency extender transit case
8710-2813	4 in-lb. 14 mm open end torque wrench
N5290A304	Cable adapter for OML/ VDI frequency extenders

Frequency Extender Bias Tee Adapter Kit (N5290A301)

The frequency extender bias tee adapter kit is used to adapt the bias tee connectors on the N5293/95A to a standard triax connector for use with a SMU or a DC power supply.



The N5290A301 includes the following:

- An adapter module with Force and Sense input and Force, Sense, and Ground output (P/N: N5290-60005)
- A 1.2 m BNC (m) – BNC (m) cable (P/N: 8120-2582) 1.2 m length
- Lemo to BNC (m) cable (P/N: N5290-60006) 1.2 m length

The different components may be purchased as replaceable parts see part numbers in parenthesis.

A single N5290A301 adapter is required per N5293/95A frequency extender used in the system.

Frequency Extender Desktop Positioner (N5290A302) [1, 2]

Designed to position the N5293A and N5295A frequency extenders when the system is used on a desktop and provides the following capability:



- Easily align the frequency extenders for connection to 1.0 mm connectorized devices.
- Simplifies the interconnection of the 1.0 mm ruggedized test ports.
- Improves repeatability of connections.
- Prevents damage to 1.0 mm connectors by preventing modules to be moved easily.

1. Also, available as part number N5290-60008.
2. One N5290A302 is required per N5293/95A frequency extender.

Broadband Frequency Extender Transit Case (N5290A303/T03)



The transportation case is available for storage and transportation of the N5293/5AX0x frequency extenders. The transportation case comes standard with the pre-configured N5290/91A millimeter-wave network analyzer solutions. It is available for purchase for the solutions that are configured separately.

N5290A303 can contain four N5293/5AX0x frequency extenders with 1.2 m cables so that one case is sufficient for both 2 and 4-port configurations.

N5290AT03 can contain two N5293/5AX5x frequency extenders with 1.8 m cables so that one case is sufficient for a 2-port system. Two cases are required for a 4-port system.

4 in-lb. 14 mm Open End Torque Wrench (P/N: 8710-2813)

The 4 in-lb 14 mm Torque wrench is designed to provide a repeatable connection to ruggedized 1.0 mm connector of the N5293A and N5295A frequency extenders. This torque wrench comes with the 85059B calibration kit.

It is a recommended accessory when an 85059B calibration kit is not purchased with the system.

Cable Adapter for VDI Frequency Extenders (N5290A304)



This accessory is required if there is a need to connect a VDI module to the N5292A test set controller and use the configured millimeter wave system to control the VDI frequency extenders.

The adapter assembly will connect directly to the N5292A and provide a standard 1.2 m length cable that would allow users to connect directly to the RF, LO and IF inputs of the VDI frequency extenders.

For the VDI frequency extenders, use the existing DC power supply purchased with the frequency extenders or order the VDI-175 DC power supply for the standard modules. The mini VDI modules are supplied with a DC power supply.

(For the OML frequency extenders, an external DC power supply is required. Purchase the N5260AK91 which will include a U1570B power supply and frequency extender DC supply adapter.)

Rack Mount Kits

Note: there are rack mount kits available for both the PNA/PNA-X and the N5292A controller used in the configuration of a millimeter wave system.

When using the rack mount kit with rails, it is not required that the locking feet be attached, it is required that both instruments be positioned above each other to ensure proper connection of the cables between the PNA/PNA-X and the N5292A. Here is what is available for rack mount kits:

Rack Mount Kit for PNA/PNA-X

Model / Part Number	Description
E3663AC	Rail kit (included with PNA/PNA-X's Option 1CM and 1CP)
1CM042A	Rack mount flange kit, for use without handles (included with PNA/PNA-X's Option 1CM)
5063-1555	Rack mount flange kit with handles
8710-2813	4 in-lb. 14 mm open end torque wrench

Rack Mount Kit for N5292A

Model / Part Number	Description
1CM110A	Rack mount flange kit 88.1 mm H (2U) for N5292A
1CP104A	Rack mount flange and handle kit 88.1 mm H (2U) for N5292A
E3663AC	Rail kit (included with N5292A Option 1CM and 1CP)

- www.keysight.com/find/N5290A
- www.keysight.com/find/N5291A
- www.keysight.com/find/N5292A
- www.keysight.com/find/N5293AX01
- www.keysight.com/find/N5293AX02
- www.keysight.com/find/N5293AX03
- www.keysight.com/find/N5293AX51
- www.keysight.com/find/N5293AX52
- www.keysight.com/find/N5293AX53
- www.keysight.com/find/N5295AX01
- www.keysight.com/find/N5295AX02
- www.keysight.com/find/N5295AX03
- www.keysight.com/find/N5295AX51
- www.keysight.com/find/N5295AX52
- www.keysight.com/find/N5295AX53
- www.keysight.com/find/N5293AY01
- www.keysight.com/find/N5293AY02
- www.keysight.com/find/N5293AY03
- www.keysight.com/find/N5293AY51
- www.keysight.com/find/N5293AY52
- www.keysight.com/find/N5293AY53
- www.keysight.com/find/N5295AY01
- www.keysight.com/find/N5295AY02
- www.keysight.com/find/N5295AY03
- www.keysight.com/find/N5295AY51
- www.keysight.com/find/N5295AY52
- www.keysight.com/find/N5295AY53
- www.keysight.com/find/U8489A
- www.keysight.com/find/85059B
- www.keysight.com/find/85059V
- www.keysight.com/find/pna

Keysight enables innovators to push the boundaries of engineering by quickly solving design, emulation, and test challenges to create the best product experiences. Start your innovation journey at www.keysight.com.

KEYSIGHT

This information is subject to change without notice. © Keysight Technologies, 2018 – 2026, Published in USA, September 10, 2026, 5992-2179EN