Keysight Technologies
RF PA/FEM Characterization & Test, Reference Solution

9 kHz to 27 GHz

Configuration Guide

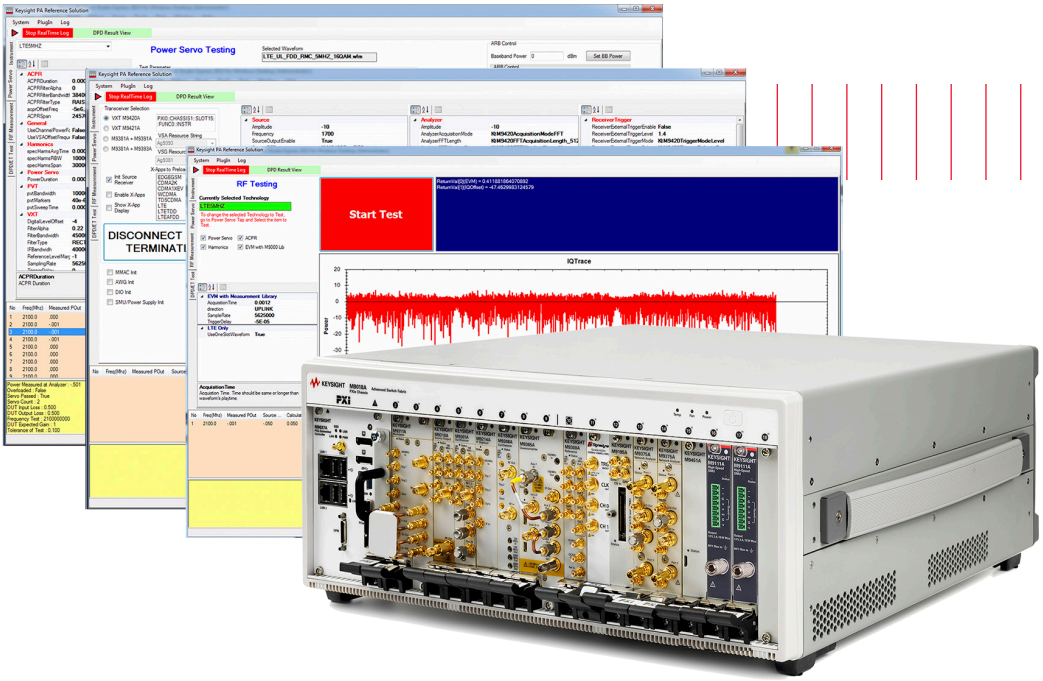

KEYSIGHT TECHNOLOGIES

Unlocking Measurement Insights

Overview

This configuration guide contains information to help you configure your RF PA/FEM characterization & test, Reference Solution and tailor the system to meet your requirements.

Table of contents

Page number

Hardware

A: Select Options for M9381A PXIe VSG 3
B: Select PXI Vector Signal Analyzer (either M9391A or M9393A) 4
C: Select M9421A PXIe Vector Transceiver (VXT) 5
D: Add M9300A PXIe Frequency Reference(s) 6
E: Select PXI Vector Network Analyzer 6
F: Select Hardware for Envelope Tracking and DUT Control 7
G. Select Controller (either PXI embedded controller or external PC controller) 8
H. Select a Chassis and Accessories 9
I. Select Digital Stimulus/Response Module Accessories 10
J. Measurement Accessories 10

Software

K: Select Software for M9381A PXIe VSG or M9421A PXIe VXT 11
L: Select Software for PXIe VSA (M9391A or M9393A) or M9421A PXIe VXT 12
M: Select Software for M937xA PXIe VNA 13

Services

N. Select Services: Calibration, Start-up Assistance 14

Configuration Examples

Reference Solution with PXIe VSG/VSA and 4-port PXIe VNA
Reference Solution with PXIe VXT and 4-port PXIe VNA 16

Other

Upgrading Your System 17
Using a Non-Keysight Chassis 17
PC Requirements for Instrument Control 18
Related Literature 18

Recommended options for RF PA/FEM characterization & test, Reference Solution indicated by ■ below.

Hardware

The M9381A PXIe VSG and M9391A or M9393A PXIe VSA are recommended for design validation test. The M9421A PXIe VXT is recommended for production test. For options related to the M9421A, please see section C on page 5.

A. Select Options for M9381A PXIe VSG

Step 1. Start with M9381A PXIe VSG base configuration			
■	The M9381A PXIe VSG (occupies 4 slots) includes:		
	M9301A M9310A M9311A	PXIe synthesizer PXIe source output PXIe digital vector modulator	– Frequency range 1 MHz - 3 GHz – Modulation bandwidth 40 MHz – Memory 32 MSa – One day start up assistance – Modular interconnect cables – Software, example programs and product information on CD
Step 2. Choose recommended frequency range			
☐	M9381A-F03	1 MHz - 3 GHz	Included in base configuration of M9381A
■	M9381A-F06	1 MHz - 6 GHz	
Step 3. Choose recommended modulation bandwidth			
☐	M9381A-B04	40 MHz	Included in base configuration of M9381A
■	M9381A-B10	100 MHz	
☐	M9381A-B16	160 MHz	
Step 4. Choose recommended memory size			
■	M9381A-M01	32 MSa	Included in base configuration of M9381A
☐	M9381A-M05	512 MSa	
☐	M9381A-M10	1024 MSa	
Step 5. Add high output power (optional) Minimizes need for external amplification to overcome power loss			
☐	M9381A-1EA	High output power	Max output power +18 dBm across the frequency range
Step 6. Add recommended fast switching speed Accelerates test throughput			
■	M9381A-UNZ	Fast switching	240 µs RF tuning and 10 µs baseband tuning in list mode
Step 7. Add analog modulation (optional)			
☐	M9381A-UNT	Analog modulation	AM, FM, phase, pulse & multitone modulation

B. Select PXI Vector Signal Analyzer (either M9391A or M9393A)

B1. M9391A PXIe VSA

Step 1. Start with M9391A PXIe VSA base configuration			
☐	The M9391A PXIe VSA base configuration (occupies 3 slots) includes:		
	M9301A M9350A M9214A	PXIe synthesizer PXIe downconverter PXIe IF digitizer	– Frequency range 1 MHz - 3 GHz – Analysis bandwidth 40 MHz – Memory 128 MSa (512 MB) – One day start up assistance – Modular interconnect cables – Software, example programs and product information on CD
Step 2. Choose recommended frequency range			
☐	M9391A-F03	1 MHz - 3 GHz	Included in base configuration of M9391A
☐	M9391A-F06	1 MHz - 6 GHz	
Step 3. Choose recommended analysis bandwidth			
☐	M9391A-B04	40 MHz	Included in base configuration of M9391A
☐	M9391A-B10	100 MHz	
☐	M9391A-B16	160 MHz	
Step 4. Choose recommended memory size			
☐	M9391A-M01	128 MSa	Included in base configuration of M9391A
☐	M9391A-M05	512 MSa	
☐	M9391A-M10	1024 MSa	
Step 5. Add recommended fast switching speed Accelerates test throughput			
☐	M9391A-UNZ	Fast switching	

B2. M9393A PXIe Performance VSA

Recommended when harmonics measurements > 6 GHz are required

Step 1. Start with M9393A PXIe Performance VSA base configuration			
■	The M9393A PXIe performance VSA base configuration (occupies 4 slots) includes:		
	M9308A M9365A M9214A	PXIe synthesizer PXIe downconverter PXIe IF digitizer	– Frequency range 9 kHz - 8.4 GHz – Analysis bandwidth 40 MHz – Memory 128 MSa (512 MB) – One day start up assistance – Modular interconnect cables – Software, example programs and product information on CD
Step 2. Choose a frequency range			
■	M9393A-F08	9 kHz – 8.4 GHz	Included in base configuration
☐	M9393A-F14	9 kHz – 14 GHz	
☐	M9393A-F18	9 kHz – 18 GHz	
☐	M9393A-F27	9 kHz – 27 GHz	

B2. M9393A PXIe Performance VSA (continued)

Step 3. Choose an analysis bandwidth			
☐	M9393A-B04	40 MHz	Included in base configuration
■	M9393A-B10	100 MHz	
☐	M9393A-B16	160 MHz	
Step 4. Choose memory size			
■	M9393A-M01	128 MSa	Included in base configuration
☐	M9393A-M05	512 MSa	
☐	M9393A-M10	1024 MSa	
Step 5. Add fast switching speed (optional) Accelerates test throughput and stepped spectrum analysis			
■	M9393A-UNZ	Fast tuning	
Step 6. Add pre-amplifier (optional) Enhances sensitivity to detect low-level signals			
☐	M9393A-P08	9 kHz – 8.4 GHz	
☐	M9393A-P14	9 kHz – 14 GHz	
☐	M9393A-P18	9 kHz – 18 GHz	
☐	M9393A-P27	9 kHz – 27 GHz	

C. Select Options for M9421A PXIe Vector Transceiver (VXT)

The M9421A PXIe VXT, recommended for production test, includes a vector signal generator and vector signal analyzer in one 4-slot module. The M9381A and M9391A or M9393A are recommended for design validation test (see sections A and B)

Step 1. Choose frequency range			
☐	M9421A-504	60 MHz to 3.8 GHz	Included in base configuration
☐	M9421A-506	60 MHz to 6 GHz	
Step 2. Upgrade analysis bandwidth			
☐	M9421A-B40	40 MHz	Included in base configuration
☐	M9421A-B85	80 MHz	
☐	M9421A-B1X	160 MHz	
Step 3. Upgrade memory size			
☐	M9421A-M02	256 MSa	Included in base configuration
☐	M9421A-M05	512 MSa	
Step 4. Upgrade output power			
☐	M9421A-1EA	High output power	
Step 5. Choose output port			
☐	M9421A-HDX	Half duplex port	

D. Add M9300A PXIe Frequency Reference(s)

Required to meet data sheet specifications for M9381A, M9391A, M9393A and M9421A

Step 1. Add a M9300A PXIe frequency reference (occupies 1 slot)
One frequency reference required per one chassis. In the case of M9381A, M9391A, or M9393A, the M9300A frequency reference can be added by ordering option M9381A-300, M9391A-300, or M9393A-300. In the case of the M9421A VXT, the frequency reference must be separately ordered with the model number M9300A as follows.

■	M9300A	PXIe frequency reference	Five 100 MHz outputs One 10 MHz output Internal 10 MHz OCXO timebase output

E. Select PXI Vector Network Analyzer

For S-parameter measurements of general PA/FEMs, the M937xA PXIe Vector Network Analyzer is recommended. For PA/FEMs that require very wide dynamic range for measuring high-rejection filters, the M9485A Multiport Vector Network Analyzer is recommended. Refer to the M9485A Configuration Guide for more details (5992-0758EN).

Step 1. Start by choosing the frequency range of the M937xA PXIe VNA		
☐	M9370A	300 kHz to 4 GHz
■	M9371A	300 kHz to 6.5 GHz
☐	M9372A	300 kHz to 9 GHz
☐	M9373A	300 kHz to 14 GHz
☐	M9374A	300 kHz to 20 GHz
☐	M9375A	300 kHz to 26.5 GHz
Step 2. Add time domain capability (optional)		
☐	M937xA-010	Time domain
Step 3. Add full N-port correction capability (optional)		
☐	M937xA-551	N-port calibrated measurement[1]
Step 4. Add multiport cable kit (optional)		
☐	Y1242A	Multiport cable kit – Includes 2 SMB cables and 1 SMA cables for connecting 2 modules together. – Add one multiport cable kit for each additional 2-port VNA
Step 5. Add multiport accessory and tool kit (optional)		
☐	Y1281A	Accessory and tool kit, including: – 5002-3361 Pull tool for SMB connectors – 5023-1450 Custom long deep socket for 3.5/SMA connector nuts

1. When ordering multiple VNA modules Option Y1242A is recommended for multiport interconnections.

F. Select Hardware for Envelope Tracking and DUT Control

Step 1. Select waveform generator Plays envelope waveform for envelope tracking measurement. Envelope tracking requires a configuration using the M9381A and M9391A or M9393A VSG/VSA, not the VXT.		
■	M3201A	PXIe Arbitrary Waveform Generator, 500 MSPS, 16 bits
■	M3201A-CH2	Two channels
■	M3201A-CLV	Variable sampling clock
■	M3201A-M20	Memory, 2 GB, 1 GSamples
Step 2. Select SMU The M9111A PXIe single-channel SMU is recommended for general PA/FEM measurements. For PA/FEM measurements that require the DC power synchronized with the PA's burst signal, the N6782A 2-quadrant SMU (Qty 2) with the N6700B system mainframe is recommended.		
■ Qty 2	M9111A	PXIe High-speed Source/Measure Unit
Step 3. Select digital stimulus/response for digital communications to DUT		
■	M9195A	PXIe digital stimulus/response with PMU
Step 4. Select M9451A PXIe measurement accelerator[1] Digital pre-distortion requires a configuration using the M9381A and M9391A or M9393A VSG/VSA, not the VXT		
■	M9451A	PXIe measurement accelerator
■	M9451A-DPD	PXIe measurement accelerator with digital pre-distortion and envelope tracking gateware
Step 5. Select power sensor For calibration		
■	U2004A	USB power sensor 9 kHz to 6 GHz

1. If a M9451A is selected, the base and option must be ordered together.

G. Select Controller (either PXI embedded controller or external PC controller) [1]

G1. For PXI embedded controller, select either M9036A or M9037A

Step 1. Select either M9036A or M9037A [2]		
☐	M9036A-M04 PXIe embedded controller Intel i5-520E dual-core, 2.4 GHz, 4 thread, 4GB RAM Select the M9036A for mid-performance, lower cost or, if your application requires XP operating system	
■	M9037A-M04 PXIe high-performance embedded controller Intel i7-4700EQ quad-core processor, 2.4 GHz, 8 thread, 4GB RAM Select M9037A for the best performance if you have memory intensive applications, multiple applications running in parallel or if a lot of data is sent to the PC from the PXIe chassis. Features removable SSD drive for security and x8 connector from front for connection to second chassis	

Step 2. Upgrade from standard memory size (optional)		
For M9036A		
☐	M9036A-M08	Memory upgrade from 4 GB to 8 GB RAM
For M9037A		
■	M9037A-M08	Memory upgrade from 4 GB to 8 GB RAM
☐	M9037A-M16	Memory upgrade from 4 GB to 16 GB RAM
Step 3. Select an operating system		
For M9036A		
☐	M9036A-WE3	Microsoft Windows Embedded Standard 7 (32-bit)
☐	M9036A-WE6	Microsoft Windows Embedded Standard 7 (64-bit)
For M9037A		
☐	M9037A-WE3	Microsoft Windows Embedded Standard 7 (32-bit)
■	M9037A-WE6	Microsoft Windows Embedded Standard 7 (64-bit)

1. For list of qualified external controllers, please see Tested Computer List Technical Note literature no. 5990-7632EN.
   The M9021A is used for both PC controllers and can only be used in the M9018A chassis.
2. The M9018A 18-slot chassis includes empty space to the left of the 1st functional slot.
   The embedded controller occupies that empty space and the 1st functional slot.

G. Select Controller (either PXI embedded controller or external PC controller) [1]

G2. For external PC controller, select options for laptop or desktop PC, below [1]

To use your desktop PC as a controller:			
☐	M9048A/48B/49A	PCIe desktop adapter[2]	
☐	Y1202A	PCIe cable	
☐	M9021A/22A/23A	PCIe cable interface[3]	

1. For list of qualified external controllers, please see Tested Computer List Technical Note literature no. 5990-7632EN. See physical connections diagram on page 10.
2. M9048A:Gen2 single port, M9048B:Gen3 single port, M9049A:Gen3 dual port.
3. M9021A:Gen2 single port (usable only with M9018A chassis), M9022A:Gen3 single port, M9023A:Gen3 dual port.

H. Select a Chassis and Accessories

Step 1. Select a chassis			
■	M9018A	PXIe chassis: 18-slot, 3U, 8 GB/s, Gen 2	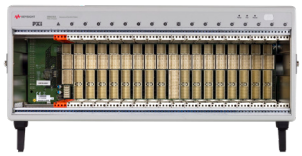
■	M9019A	PXIe chassis: 18-slot, 3U, 24 GB/s, Gen 3	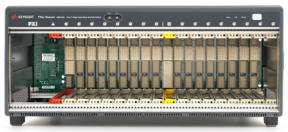

Step 2. Choose enough slot blocker kits and EMC filler panels to fill every open slot Recommended to achieve data sheet specifications				
■	Y1212A	Qty 1	Slot blocker kit: 5 slots	
■	Y1213A	Qty 1	PXI EMC filler panel kit: 5 slots	

1. Available in 1-slot, 2-slot or 3-slot options depending on the chassis configuration. For more information, please visit www.keysight.com/find/m9018a.

I. Select Digital Stimulus/Response Module Accessories

Select one DUT cable (based on fixture interface)		
☐	Y1245A	Single-site, 16-channel, signal cable, 0.5 meter
☐	Y1246A	Single-site, 16-channel, signal cable, 1 meter
☐	Y1247A	Single-site, 16-channel, signal cable, 2 meter
☐	Y1248A	Multi-site (4 sites of 4-channels each), signal cable, 1 meter
☐	Y1249A	Multi-site (4 sites of 4-channels each), signal cable, 2 meter
☐	Y1254A	SMA breakout cables, 1 meter
☐	Y1255A	SMA breakout cables, 2 meter

J. Measurement Accessories

A complete list of RF and microwave test accessories is available at: www.keysight.com/find/mta.

Accessories are available in these connector types: 50 ohm Type-N, 3.5 mm, 7 mm, and waveguide. Test port cables and a calibration kit should be added for a complete measurement system. A verification kit is used to verify corrected system performance.

Refer to 5990-7745EN for a complete list of measurement accessories.

Software

K. Select Software for M9381A PXIe VSG or M9421A PXIe VXT

Step 1. Start with M9381A or M9421A base configuration

The M9381A and M9421A come standard with the following software:

- Keysight IO Libraries Suite including Connection Expert [1]
- Instrument software, soft front panel, drivers for use with MATLAB, LabVIEW, Visual Studio (including VB Net, C#, C/C++), Keysight VEE [2]
- Sample waveforms and programming examples

Step 2. Download free Keysight Command Expert software [4] (optional)

FREE software that provides fast and easy instrument control for the PC. Command Expert combines instrument command sets, command sequences, documentation, syntax checking and command execution in one simple interface. Command Expert helps you to:

- Find instrument commands
- Access command documentation
- Verify command syntax
- Build instrument command sequences
- Execute instrument command sequences
- Integrate sequences in MATLAB, Visual Studio, Excel, LabVIEW, Keysight VEE or Keysight SystemVue PC application environment
- Generate code for command sequences in MATLAB, Visual C#, Visual Basic.NET and Visual C/C++
- Profile command execution time
- Debug command sequences using breakpoints and single stepping

Step 3. Add Signal Studio software [3, 5] (optional)

Provides performance optimized referenced signals validated by Keysight

Cellular Communications		
☐	N7600B	Signal Studio for W-CDMA / HSPA+
☐	N7601B	Signal Studio for cdma2000® / 1xEV-DO [6]
☐	N7602B	Signal Studio for GSM / EDGE / EVO
☐	N7612B	Signal Studio for TD-SCDMA / HSDPA
☐	N7624B	Signal Studio for LTE / LTE-Advanced FDD
☐	N7625B	Signal Studio for LTE / LTE-Advanced TDD
Wireless Connectivity		
☐	N7617B	Signal Studio for WLAN 802.11a/b/g/n/ac
Power Amplifier		
■	N7614B	Signal Studio for PA test [6]

To use Signal Studio with modular instruments, you must purchase a "connect to" license for each Signal Studio license used (see list at left).

- 9FP Connect to M9381A/M9421A fixed perpetual license (recommended)
- 9TP Connect to M9381A/M9421A transportable perpetual license

For LTE (N7624B or N7625B), the following licensing option is recommended:

- HFP Basic LTE FDD Rel 9 fixed perpetual license

For PA test (N7614B), the following licensing options are recommended:

- EFP - Envelope tracking
- FFP - Digital pre-distortion

Step 4. Add MATLAB software [7] (optional)

Create arbitrary waveforms, customize measurement and data analysis routines, create your own instruments applications and test systems, automate measurements, signal generation, and report generation

☐	N6171A-M01	MATLAB Basic Package
☐	N6171A-M02	MATLAB Standard Package
☐	N6171A-M03	MATLAB Advanced Package

1. Both IO library (version 16.3 or newer) and Connection Expert software need to be installed on the PC controlling the equipment. To download, visit www.keysight.com/find/iosuite
2. Find latest versions of instrument drivers, see product webpage.
3. For more information, see Signal Studio brochure, literature number 5989-6448EN.
4. To download or get more information on Command Expert, visit www.keysight.com/find/commandexpert
5. To generate an envelope, Signal Studio for LTE must be purchased.
6. The M9421A VXT does not support direct "connect to" the N7601B or N7614B. However, It does support waveform export with the 5- or 50-pack licensing using N7601B waveforms
7. For more information on MATLAB software, visit www.keysight.com/find/n6171a

L. Select Software for PXIe VSA (M9391A or M9393A) or PXIe VXT (M9421A)

Step 1. Start with M9391A, M9393A, or M9421A base configuration

The M9391A, M9393A, and M9421A comes standard with the following software:

- Keysight IO Libraries Suite including Connection Expert [1]
- Instrument software, soft front panel, drivers for use with MATLAB, LabVIEW, Visual Studio (including VB Net, C#, C/C++), Keysight VEE [2]
- Sample waveforms and programming examples

Step 2. Download free Keysight Command Expert software [3] (optional)

FREE software that provides fast and easy instrument control for the PC. Command Expert combines instrument command sets, command sequences, documentation, syntax checking and command execution in one simple interface. Command Expert helps you to:

- Find instrument commands
- Access command documentation and verify command syntax
- Build and execute instrument command sequences
- Integrate sequences in MATLAB, Visual Studio, Excel, LabVIEW, Keysight VEE or Keysight SystemVue PC application environment
- Generate code for command sequences in MATLAB, Visual C#, Visual Basic.NET and Visual C/C++
- Profile command execution time
- Debug command sequences using breakpoints and single stepping

Step 3. Add X-Series Measurement Applications for the M9391A or M9393A [4] (optional)

Provides essential RF conformance measurements and tasks for specific communications standards.

☐	M9080B	LTE/LTE-Advanced FDD [5]
☐	M9082B	LTE/LTE-Advanced TDD [5]
☐	M9073A	W-CDMA/HSPA+
☐	M9071A	GSM/EDGE/EVO
☐	M9079A	TD-SCDMA/HSPA
☐	M9076A	1xEV-DO
☐	M9072A	cdma2000®/cdmaOne
☐	M9077A	WLAN 802.11a/b/g/n/ac/ah

To use X-series measurement applications with the M9391A or M9393A, you must purchase the license with product number "M90XX" and select either:

- 1FP Fixed perpetual license
- 1TP Transportable perpetual license

Step 4. Add X-Series Measurement Applications for M9421A (optional)

Provides essential RF conformance measurements and tasks for specific communications standards.

☐	N9080B	LTE/LTE-Advanced FDD [5]
☐	N9082B	LTE/LTE-Advanced TDD [5]
☐	N9073A	W-CDMA/HSPA+
☐	N9071A	GSM/EDGE/EVO
☐	N9079A	TD-SCDMA/HSPA
☐	N9076A	1xEV-DO
☐	N9072A	cdma2000®/cdmaOne
☐	N9077A	WLAN 802.11a/b/g/n/ac/ah
☐	N9075A	Mobile WiMAX™
☐	N9081A	*Bluetooth*®
☐	N9064A	VXA vector signal analysis
☐	N9069A	Noise figure

To use X-series measurement applications with the M9421A, you must purchase the license with product number "N90XX" and select either:

- 1FP Fixed perpetual license
- 1TP Transportable perpetual license

1. Both IO library (version 16.3 or newer) and Connection Expert software need to be installed on the PC controlling the equipment. To download, visit www.keysight.com/find/iosuite
2. Find latest versions of instrument driver see product webpage
3. To download or get more information on Command Expert, visit www.keysight.com/find/commandexpert
4. For more information, see "Accelerate PXI VSA Measurements with X-Series Measurement Applications," literature number 5991-2604EN.
5. For LTE-Advanced licenses, select options – 2FP or – 2TP. For more information, see the M9080/82B technical overview, literature number 5991-4610EN.

M. Select Software for M937xA PXIe VNA

Step 1. Start with M937xA base configuration

The M937xA comes standard with the following software:

- Keysight IO Libraries Suite including Connection Expert [1]
- Instrument software, soft front panel, drivers for use with MATLAB, LabVIEW, Visual Studio (including VB Net, C#, C/C++), Keysight VEE [2]
- Programming examples

Step 2. Download free Keysight Command Expert software [3] (optional)

FREE software that provides fast and easy instrument control for the PC. Command Expert combines instrument command sets, command sequences, documentation, syntax checking, and command execution in one simple interface. Command Expert helps you to:

- Find instrument commands
- Access command documentation
- Verify command syntax
- Build instrument command sequences
- Execute instrument command sequences
- Integrate sequences in MATLAB, Visual Studio, Excel, LabVIEW, Keysight VEE or Keysight SystemVue PC application environment
- Generate code for command sequences in MATLAB, Visual C#, Visual Basic.NET and Visual C/C++
- Profile command execution time
- Debug command sequences using breakpoints and single stepping

1. Both IO library (version 16.3 or newer) and Connection Expert software need to be installed on the PC controlling the equipment. To download, visit www.keysight.com/find/iosuite
2. Find latest versions of this software at www.keysight.com/find/pxivna
3. To download or get more information on Command Expert, visit www.keysight.com/find/commandexpert

For sample demo programs of the PA reference solution, contact your Keysight representative.

Services

N. Select Services: Calibration, Start-up Assistance

■		One day start-up assistance	Included in base configuration
☐	M9381A-UK6	Commercial calibration certificate with test data for M9381A (M9301A, M9310A, M9311A)	Calibration certificate with measurement results available only at time of purchase.
☐	M9391A-UK6	Commercial calibration certificate with test data for M9391A (M9301A, M9350A, M9214A)	Calibration certificate with measurement results available only at time of purchase.
☐	M9421A-UK6	Commercial calibration certificate with test data for M9421A	Calibration certificate with measurement results available only at time of purchase.
☐	M9300A-UK6	Commercial calibration certificate with test data for M9300A	Calibration certificate with measurement results available only at time of purchase.
☐	M937xA-UK6	Commercial calibration certification with test data	Complete set of measurements which tests unit to manufacturer's published specifications. Includes calibration label, calibration certificate, and data report. Conforms to ISO 9001.
☐	M937xA -1A7	ISO 17025 compliant calibration	Complete set of measurements which tests unit to manufacturer's published specifications. Includes calibration label, ISO 17025 calibration certificate, and data report, measurement uncertainties and guardbands on all customer specifications. Conforms to ISO 17025 and ISO 9001.
☐	M937xA -A6J	ANSI Z540 compliant calibration	Complete set of measurements which tests unit to manufacturer's published specifications. Includes pre- and post-adjustment data with measurement uncertainty information compliant to the ANSI/NCSL Z540 standard.
☐	M937xA -897 [1]	Perpetual license for built-in performance test software for Keysight inclusive cal	Adds built-in performance testing and calibration software for self-maintainers. Requires additional equipment. See the analyzer's Service Guide for more information on equipment required.
☐	M937xA -898 [1]	Perpetual license for built-in performance test software for Standards compliant cal	Adds built-in performance testing and calibration software for self-maintainers. Requires additional equipment. See the analyzer's Service Guide for more information on equipment required.
☐	N7800A	Calibration and adjustment software	To be used for on-site calibrations

1. Additional hardware required. Please refer to the analyzer's Service Guide for required service test equipment.

One day start-up assistance

A Keysight Technologies applications engineer will get you started quickly by helping you install the modules in a chassis, configure the controller, load software and start making measurements.

Calibration services

The modular products are factory calibrated and shipped with an ISO-9002, NIST-traceable calibration certificate. A one year calibration cycle is recommended. The M9381A PXIe VSG, M9391A/93A PXIe VSAs and M937XA PXIe VNA, are supported by the Keysight N7800A Calibration Software to perform calibrations that test all product specifications and is compliant with ISO 17025:2005, ANSI/NCSL Z540.3-2006 and Measurement Uncertainty per ISO Guide to Expression of Measurement Uncertainty 1995.

N7800A calibration & adjustment software

The M9381A PXIe VSG, M9391A /93A PXIe VSAs and M937XA PXIe VNA are supported by Keysight's calibration and adjustment software. This is the same software used at Keysight's service centers to automate calibration. The software offers compliance tests for ISO 17025:2005,
ANSI/NCSL Z540.3-2006, and measurement uncertainty per ISO Guide to Expression of Measurement Uncertainty.

Product Information: www.keysight.com/find/contactus
Or call: 1 800 829-4444 US
Repair and Calibration: www.keysight.com/find/infoline
For all modular products: www.keysight.com/find/modular

Support		
Core exchange program	Keysight's replacement core exchange program allows fast and easy module repairs. A replacement core assembly is a fully functioning pre-calibrated module replacement that is updated with the defective module serial number, allowing the replacement module to retain the original serial number	For qualified self-maintainers in US only
Self-test utility	A self-test utility runs a set of internal tests which verifies the health of the modules and reports their status	Included in base configuration

Configuration Examples

Cables for module to module connections are shipped with the product.

Please see the startup guides for detailed cabling diagram and parts list:

- For M9381A PXIe VSG and M9391A PXIe VSA: literature number M9300-90090
- For M9393A PXIe Performance VSA: literature number M9393-90002
- For M937XA PXIe VNA: literature number M9370-90001
- For M9421A PXIe VXT: literature number M9420-90001

Configuration example with PXIe VSG/VSA and 4-port VNA

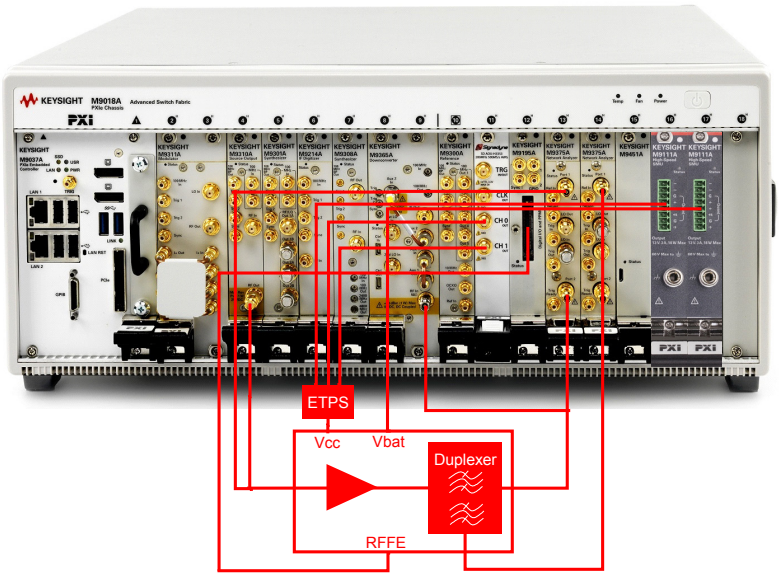

Configuration example with PXIe VXT and 4-port VNA

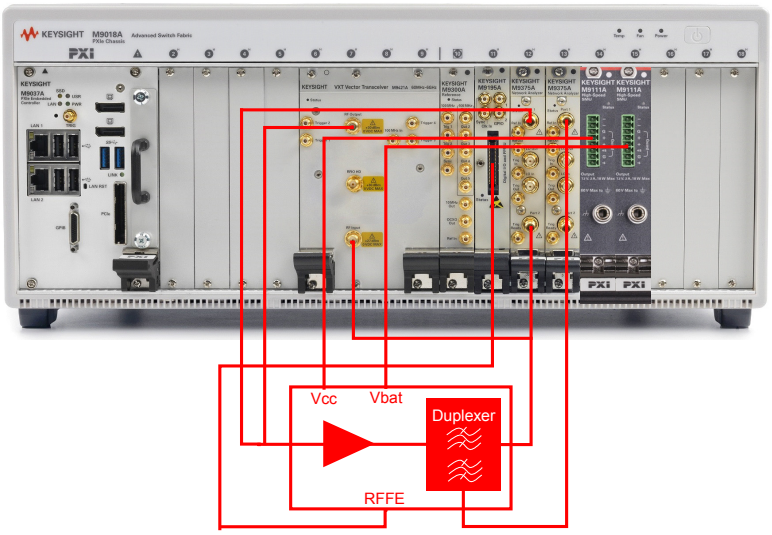

Upgrading Your System

Your product can be easily upgraded after the initial purchase. All PXIe options for VSA, VSG, and VXT are controlled by a licensing key and can be quickly upgraded.

How to upgrade your VSG, VSA or VXT:

1. Contact your Keysight representative to place an order for an option upgrade.
2. You will receive your hardware entitlement certificate via email.
3. Redeem the certificate online by following the instructions provided to receive a license key file.
4. Install the license key file using the Keysight License Manager.
5. Begin using the new capability.

How to upgrade your M937XA PXIe VNA:

1. Contact your Keysight representative to place an order for an option upgrade.
2. Return your instrument to a Keysight service center for upgrade and calibration.

Using a Non-Keysight Chassis

The M9381A or M9421A, M9391A/M9393A (with M9300A frequency reference) and M937XA can be successfully installed in a non-Keysight PXI chassis. Please use the following guidelines.

- Ensure that the chassis has 5 consecutive PXIe or PXI-H slots which can be used by the M9381A or M9391A/M9393A or M9421A and M9300A and one available PXIe or PXI-H slot which can be used by the M937XA.
- Ensure that the chassis and controller supports peer-to-peer PXI Express I/O switch topology.
- Ensure that controller selected is compatible with chassis.

Please contact your Keysight representative for more detailed information. For technical assistance with non-Keysight equipment, please refer to the equipment manufacturer's website.

PC Requirements for Instrument Control [1]

Operating system	Windows 7 (32 & 64 bit)
Processor speed	1.5 GHz dual core (x86 or x64) minimum, 2.4 GHz recommended No support for Itanium64
Available memory	4 GB minimum 8 GB recommended
Available disk space 1	1.5 GB available hard disk space includes: 1 GB for Microsoft.NET framework 3.5 SPI [2] 100 MB for Keysight IO libraries suite
Video	Support for DirectX 9 graphics with 128 MB graphics recommended (SuperVGA supported)
Browser	Microsoft Internet Explorer 7.0 or greater

1. For a list of computers compatible with Keysight Technologies PXIe M9018A chassis, refer to Tested Computer Technical Note (literature no. 5990-7632EN).
2. NET framework runtime components are installed by default with Windows Vista and Windows 7. Therefore, you may not need this amount of available disk space.

Related Literature

For more detailed product and specification information refer to the following literature and web pages:

- *RF PA/FEM Characterization & Test, Reference Solution*, Brochure (literature no. 5992-0071EN)
- *Increase Power Amplifier Test Throughput with the M9381A PXIe VSG and M9391A PXIe VSA,* Application Brief (literature no. 5991-0652EN)
- *M9381A PXIe VSG*, Data Sheet (literature no. 5991-0279EN)
- *M9391A PXIe VSA*, Data Sheet (literature no. 5991-2603EN)
- *M9393A PXIe Performance VSA*, Data Sheet, (literature no. 5991-4538EN)
- *M9421A PXIe VXT*, Data Sheet (literature no. 5992-1646EN)
- *M937XA PXIe VNA*, Data Sheet (literature no. 5991-4884EN)
- *M937XA PXIe VNA*, Startup Guide (literature no. M9370-90001)
- *M9391A PXIe VSA and M9381A PXIe VSG*, Startup Guide (literature no. M9300-90090).
- *M9018A PXIe 18 slot Chassis*, Data Sheet (literature no. 5990-6583EN)
- *M9036A PXIe Embedded Controller*, Data Sheet (literature no. 5990-8465EN)
- *M9037A PXIe Embedded Controller*, Data Sheet (literature no. 5991-3661EN)
- *M9111A PXIe High-speed Source/Measure Unit*, Data Sheet (literature no.5992-1541EN)
- *N6700B Low Profile Modular Power System Mainframe*, Data Sheet (literature no. 5989-1411EN)
- *N6780 Series Source/Measure Units for N6700 Modular Power System*, Data Sheet (literature no. 5990-5829EN)
- U*2000 Series USB Power Sensors*, Data Sheet (literature no. 5989-6278EN)
- *X-Series Measurement Applications for Modular Instruments*, Brochure (literature no. 5991-2604EN)

Evolving Since 1939

Our unique combination of hardware, software, services, and people can help you reach your next breakthrough. We are unlocking the future of technology.
From Hewlett-Packard to Agilent to Keysight.

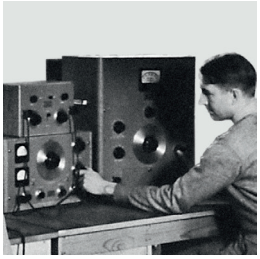

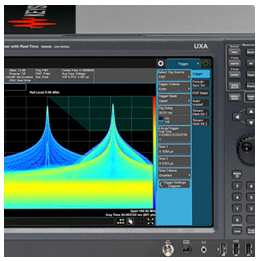

myKeysight

myKeysight
www.keysight.com/find/mykeysight
A personalized view into the information most relevant to you.

www.keysight.com/find/emt_product_registration
Register your products to get up-to-date product information and find warranty information.

KEYSIGHT SERVICES
Accelerate Technology Adoption.
Lower costs.

Keysight Services
www.keysight.com/find/service
Keysight Services can help from acquisition to renewal across your instrument's lifecycle. Our comprehensive service offerings—one-stop calibration, repair, asset management, technology refresh, consulting, training and more—helps you improve product quality and lower costs.

CALIBRATION UP TO 10 YEARS WARRANTY
ASSURANCE PLANS

Keysight Assurance Plans
www.keysight.com/find/AssurancePlans
Up to ten years of protection and no budgetary surprises to ensure your instruments are operating to specification, so you can rely on accurate measurements.

Keysight Channel Partners
www.keysight.com/find/channelpartners
Get the best of both worlds: Keysight's measurement expertise and product breadth, combined with channel partner convenience.

www.keysight.com/find/solution-padvt

For more information on Keysight Technologies' products, applications or services, please contact your local Keysight office. The complete list is available at:
www.keysight.com/find/contactus

Americas	
Canada	(877) 894 4414
Brazil	55 11 3351 7010
Mexico	001 800 254 2440
United States	(800) 829 4444
Asia Pacific	
Australia	1 800 629 485
China	800 810 0189
Hong Kong	800 938 693
India	1 800 11 2626
Japan	0120 (421) 345
Korea	080 769 0800
Malaysia	1 800 888 848
Singapore	1 800 375 8100
Taiwan	0800 047 866
Other AP Countries	(65) 6375 8100
Europe & Middle East	
Austria	0800 001122
Belgium	0800 58580
Finland	0800 523252
France	0805 980333
Germany	0800 6270999
Ireland	1800 832700
Israel	1 809 343051
Italy	800 599100
Luxembourg	+32 800 58580
Netherlands	0800 0233200
Russia	8800 5009286
Spain	800 000154
Sweden	0200 882255
Switzerland	0800 805353
	Opt. 1 (DE)
	Opt. 2 (FR)
	Opt. 3 (IT)
United Kingdom	0800 0260637

For other unlisted countries:
www.keysight.com/find/contactus
(BP-9-7-17)

DEKRA Certified
ISO9001 Quality Management System

www.keysight.com/go/quality
Keysight Technologies, Inc.
DEKRA Certified ISO 9001:2015
Quality Management System

KEYSIGHT TECHNOLOGIES
Unlocking Measurement Insights

This information is subject to change without notice.
© Keysight Technologies, 2017
Published in USA, December 1, 2017
5992-0072EN
www.keysight.com