Errata

Title & Document Type: 8111A Pulse/Function Generator Operating & Service Manual

Manual Part Number: 08111-90002

Revision Date: September 1984

HP References in this Manual

This manual may contain references to HP or Hewlett-Packard. Please note that Hewlett-Packard's former test and measurement, semiconductor products and chemical analysis businesses are now part of Agilent Technologies. We have made no changes to this manual copy. The HP XXXX referred to in this document is now the Agilent XXXX. For example, model number HP8648A is now model number Agilent 8648A.

About this Manual

We've added this manual to the Agilent website in an effort to help you support your product. This manual provides the best information we could find. It may be incomplete or contain dated information, and the scan quality may not be ideal. If we find a better copy in the future, we will add it to the Agilent website.

Support for Your Product

Agilent no longer sells or supports this product. You will find any other available product information on the Agilent Test & Measurement website:

www.tm.agilent.com

Search for the model number of this product, and the resulting product page will guide you to any available information. Our service centers may be able to perform calibration if no repair parts are needed, but no other support from Agilent is available.

Agilent Technologies

OPERATING AND SERVICE MANUAL

8111A PULSE/FUNCTION GENERATOR 20 MHz

HEWLETT PACKARD

HEWLETT PACKARD

MANUAL CHANGES

03/94

Manual for Model Number	8111A
Manual printed on	Sept. 1984
Manual Part Number	08111-90002

Make all ERRATA corrections.

Check the following table for your instrument serial prefix/serial number and make the listed changes to your manual.

New Item

Serial Prefix or Serial Number		Manual Changes	Serial Prefix or Serial Number	Manual Changes
ERRATA				
2215G02366		1		
2215G02416	and above	1-2		
2519G02591	and above	1-3		
2519G02716	and above	1-4		
2519G02816	and above	1-5		
2519G03241	and above	1-6		
2519G03661	and above	1-7		
2519G03681	and above	1-8		
2519G03881	and above	1-9		
2519G04021	and above	1-10		
2519G04681	and above	1-11		
2519G04761	and above	1-12		
2519G05041	and above	1-13		
2519G05141	and above	1-14		
2849G05621	and above	1-15		
2849G06201	and above	1-16		
2849G06721	and above	1-17		
2849G06841	and above	1-18		
2849G07601	and above	1-19		
2849G08081	and above	1-20		
2849G08291	and above	1-21		
2849G08471	and above	1-22		

MODEL 8111A

INDEX OF MANUAL CHANGES

MANUAL CHANGE	MISCELLANEOUS	FRAME	A1	A2		A4	A5	A6	A7	A8	STANDARD
			A21		A3						OPTION 001
ERRATA	Page 2-1 Page 8-57 Page 6-16 Page 5-4,5-5										
1					C1,3,4,9, C10 thru C13	C13,16,19, C21,22	C20	C2 thru 6, C13,16	C6,7,8	C12,13,15,16, C17,23	
3		MP2,6,13,14, MP15,17,18, MP22						Q1			
4						R35					
5										K 1,2,3	
6	Page 6-12 Page 6-10							R3,13 *R3,13 C10			
7	Page 6-13									MP5,6,7,8,9, MP10,11,12	
8		MP18									
9	Page 6-12							U2			
10	Page 6-15				C4						
11						C8,9,12	C14,18,21	C8,9,11, C14,15	C1,2,5,9, C10	C6,7,21,24,25	

MODEL 8111A
INDEX OF MANUAL CHANGES

MANUAL CHANGE	MISCELLANEOUS	FRAME	A1 A21	A2	A3	A4	A5	A6	A7	A8	STANDARD OPTION 001
12					C4	C2	R49,53, R67,9				
14					U17						
15		MP 20,17, MP23,24, MP25,14, MP15									
16								R51			
17		J1-3									
18						C18		L2			
19			A1,C2	C15,18							
20							U1	U2			
21							R6, R7				
22							U1				

MODEL 8111A

INDEX OF MANUAL CHANGES

MANUAL CHANGE	MISCELLANEOUS	FRAME	A9	A10 A30	A11 A31	A12	A13	STANDARD OPTION 001
1				C5,8,9				
2	Page 8-42, Page 8-49		A9,C2, CR1,R11					
11			C1	C2,3				
13							S1	

ERRATA

On Page 2-1, Section II / Installation, change to read:

CAUTION

Do no change the LINE SELECTOR switch settings with the instrument on or with power connected to the rear panel.

2–9 Figure 2–1 provides information for line voltage and fuse selection:

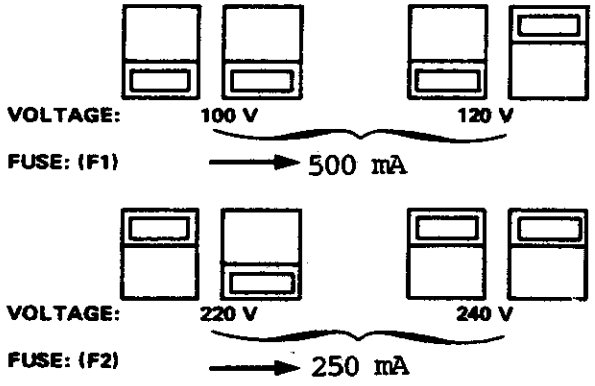

Figure 2–1. Sliding Switches Positions for different Line Voltages

On Page 8-57, VCO Board A5, change to read:

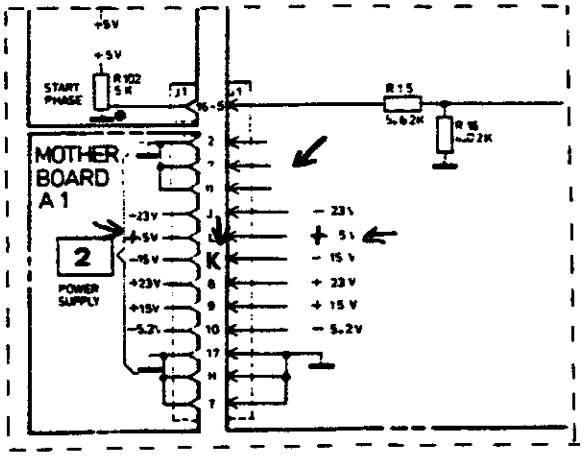

On Page 6-16, Replaceable parts list:

Delete: Q3,7 1853-0212

A21Q4,8 1854-0368

ERRATA (Cont.)

Page 5-4 Shaper Adjustment

change step 6 to read:
Adjust A6R6 for 8V +100mV - ØmV

add below step 12
NOTE: Steps 8 to 12 are interdependent and must therefor be repeated until the values are within tolerance.

Page 5-5

change step 14 to read:

Adjust A6R27 for 800mV +10mV -ØmV
change the NOTE to read:

NOTE: Readjust steps 1 to 6. Recheck steps 7 to 14 and readjust if necessary.

add to step 30:
Check again steps 1 to 14.

Page 6-12

change the Table of Replaceable Parts to read:

A8	C4	0160-3874	C-FXD 10PF 200V

ERRATA (Cont.)

On Page 4-8, Performance Tests 4-15, step 4., change to read:

8111A	Counter Reading
10%	4µs - 16µsec
20%	17µs - 23µsec
50%	47µs - 53µsec
---	--- ---
---	--- ---

On Page 4-15, Performance Tests Record, Step 4-15, change to read:

Duty Cycle	Minimum	Actual	Maximum
10%	4µs		16µs
20%	17µs		23µs
50%	47µs		53µs
---	---		---
---	---		---

On Page 8-50 (Component Layout + Ref.Desig.List) change to read:

C25 to C26

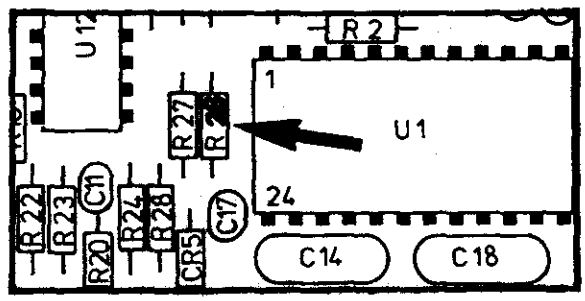

On Page 6-15, Table 6-3 Replaceable Parts OPTION 001, add:

MP1	4040-1969	FRONT PANEL, OPTION 001

MANUAL CHANGE 1

On Page 6-10 thru 6-16, change the Table of Replaceable Parts to read:

A3	C1,3,4, C10 thru 13		
A4	C13,16,19,21,22		
A5	C20		
A6	C2 thru 6 C13,16	0160-5746	C-FXD 0.1UF 20%
A7	C6,7,8		
A8	C12,13,15,16, C17,23		
A10	C5,8,9		
A30	C5,8,9		

MANUAL CHANGE 2

On Page 6-15, change the Table of Replaceable Parts to read:

	A9	08111-66519	PC-BD
Add:	C2	0180-0116	C-FXD 6.8UF 35V TA
	CR1	1901-0033	DIO 180V .2A
	R11	0698-4477	R-FXD 10.5K 1%

On Page 8-42, change Service Sheet 6 to read:

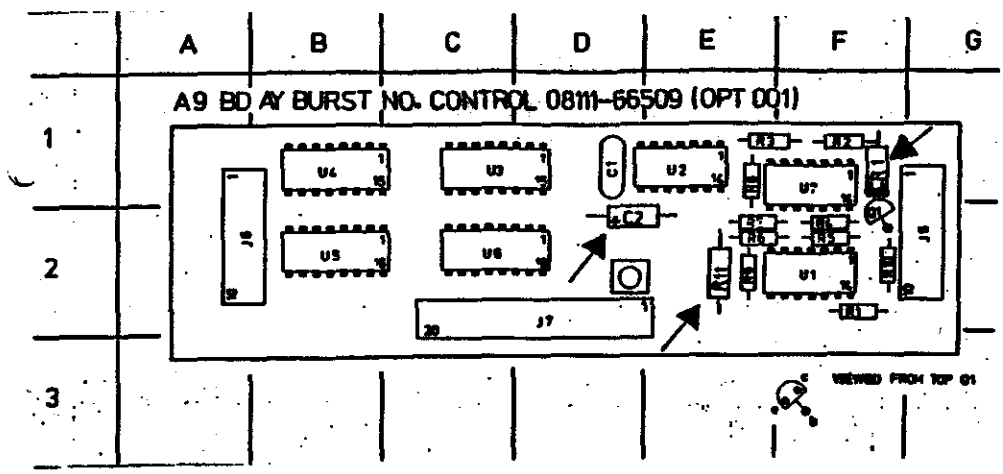

On Ref Des Table and Grid Loc add:

C2	D1
CR1	F1
R11	E2

MANUAL CHANGE 2 (Cont.)

On Page 8-49, change Schematic to read:

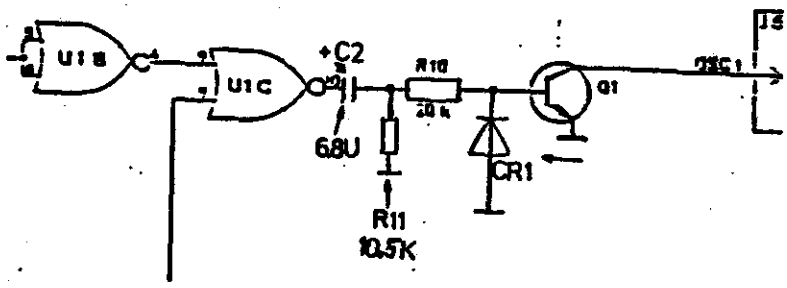

MANUAL CHANGE 3

IMPORTANT NOTE: New part numbers assigned to the following items since all threaded holes or screws are now METRIC!

On Page 6-7, change the Table of Replaceable Parts to read:

MP 2	08111-00211	PANEL SUB
MP 6	08111-01211	BRKT FRONT
MP13	08111-02315	HT SNK OUT HLDR
MP14	08111-04111	COVER TOP
MP15	08111-04112	COVER BOTTOM
MP17	5021-5813	FRAME FRONT
MP18	5021-0512	FRAME REAR
MP22	5021-5830	SIDE STRUT

On Page 6-12, change the Table of Replaceable Parts to read:

A6Q1	1853-0589	XSTR MD4260

MANUAL CHANGE 4

On Page 6-10, change the Table of Replaceable Parts to read:

A4R35	0698-4460	R-FXD 649 1% .125W

MANUAL CHANGE 5

On Page 6-13, change the Table of Replaceable Parts to read:

A 8 K 1,2,3	0490-1527	RELAIS REED

MANUAL CHANGE 6

On Page 6-12, Table 6-3., Replaceable Parts List:

ADD:	A6	*R3	0698-3202	R-FXD 1.74K 1%
	A6	-R3	0757-1094	R-FXD 1.47K 1%
	A6	*R13	0698-3136	R-FXD 17.8K 1%
	A6	-R13	0757-0441	R-FXD 8.25K 1%

DEL: A6 R3,13

On Page 6-10, change the Table of Replaceable Parts to read:

A5	C10	0180-3822	C-FXD 39UF 15V

MANUAL CHANGE 7

On Page 6-13, change the Table of Replaceable Parts to read:

A8	MP5,6,7,8, MP9,10,11,12	1205-0662	HT SINK SGL

MANUAL CHANGE 8

On Page 6-7, Replaceable Parts List, change to read:

MP18	5021-5814	FRAME REAR

MANUAL CHANGE 9

On Page 6-12, change the Table of Replaceable Parts to read:

A6	U2	1826-0923	IC 1DC7

MANUAL CHANGE 10

On Page 6-15, change the Table of Replaceable Parts to read:

A3	C4	0160-0575	C-FXD 47UF CER

MANUAL CHANGE 11

On Table 6-3, Replaceable Parts List, change to read:

A4	C8,9,12		
A5	C14,18,21		
A6	C8,9,11,14,15	0160-6596	C-FXD .47UF 20%
A7	C1,2,5,9,10		
A8	C6,7,21,24,25		
A9	C1		
A10	C2,3		
A30	C2,3		

MANUAL CHANGE 12

On Page 6-9, change the Table of Replaceable Parts to read:

A4	C2	0160-5739	C-FXD 15PF 5%

On Page 6-11, change the Table of Replaceable Parts to read:

A5	R49	0757-0441	R-FXD 8,25K 1%
	R53,67	0698-0085	R-FXD 2,61K 1%
	R9	0757-0528	R-FXD 1,62K 1%
A3	C4	0160-0574	C-F .022UF 20%

MANUAL CHANGE 13

On Page 6-14, Replaceable Parts List, change to read:

A13	S1	3101-2953	SW-LINE

MANUAL CHANGE 14

On Page 6-14, change the Table of Replaceable Parts to read:

A3	U17	1820-3841	IC 74AS168

MANUAL CHANGE 15

On Page 1-2, 1-27. Accessories, change to read:

5061-2001	to	5062-4001
5061-0072	to	5062-3972
5061-0074	to	5062-3974

On Page 6-7, Replaceable Parts List,change to read:

MP20	5001-0538	TRIM STRIP
MP17	5021-8413	FRAME FRONT 1/2M
MP23	5041-8801	FOOT
MP24	5041-8803	TRIM STRIP
MP25	5061-8822	FOOT REAR N-SKID
MP14	08111-04121	COVER TOP
MP15	08111-04122	COVER BOTTOM

MANUAL CHANGE 16

On Page 6-12, Replaceable Parts List, change to read:

A6	R51	0757-0422	R-FXD 909

MANUAL CHANGE 17

On Page 6-7, change the Table of Replaceable Parts to read:

J1-3	1250-0083	CONN BNC BLKHD

MANUAL CHANGE 18

On Page 6-10, change the Table of Replaceable Parts to read:

A4	C18	0160-5736	C-FXD 22PF 5%

MANUAL CHANGE 18 (Cont.) .

On Page 6-11, Replaceable Parts List,

add:	A6	L2	9170-0894	BEAD

BEAD MUST BE INSERTED IN BASE-WIRE OF Q2!

Change Schematic, Page 8-71 to read:

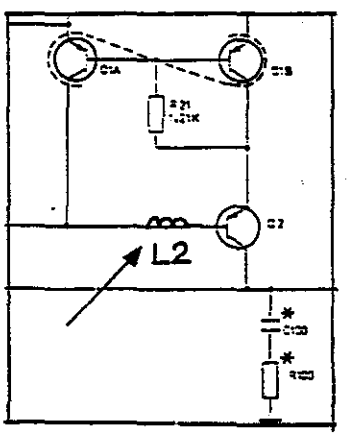

Change Component Layout, Page 8-66, to read:

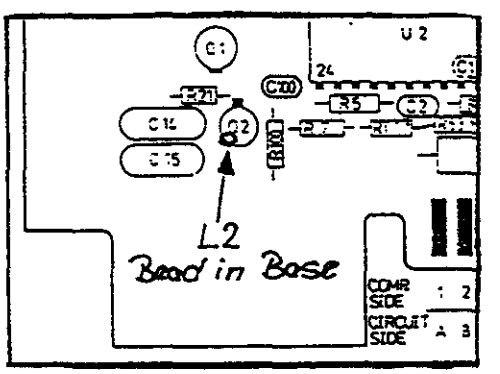

MANUAL CHANGE 19

On Page 6-9, Change the Table of Repl.Parts to read:

A1	C2	0180-3158	C-F 6800UF	(EDC-LBL:A-3217)
A2	C15,18	0180-3157	C-F 47uF 40V	(EDC-LBL:A-3217)

MANUAL CHANGE 20

On Page 6-11, Repl.Parts List, Change to read:

A5	U1	1DB6-0001	IC SNAKE	(EDC-LBL:B-3310)
A6	U2	1DC7-0001	IC BOOSTER	(EDC-LBL:B-3310)

MANUAL CHANGE 21

On Page 6-11, Repl.Parts List, change to read:

A5	R6,7	0757-0274	RES 1.21k 1%	(EDC-LBL:B-3343)

MANUAL CHANGE 22

On Page 6-11, Repl.Parts List change to read:

A5	U1	1826-0955	IC 1DB6	EDC-LBL: B-3408

HEWLETT
PACKARD
Böblingen Instruments Division

Herstellerbescheinigung

Hiermit wird bescheinigt, daß das Gerät/System

Puls-Generator HP 8111A

in Übereinstimmung mit den Bestimmungen von Postverfügung 1046/84 funkentstört ist.

Der Deutschen Bundespost wurde das Inverkehrbringen dieses Gerätes/Systems angezeigt und die Berechtigung zur Überprüfung der Serie auf Einhaltung der Bestimmungen eingeräumt.

Zusatzinformation für Meß- und Testgeräte

Werden Meß- und Testgeräte mit ungeschirmten Kabeln und/oder in offenen Meßaufbauten verwendet, so ist vom Betreiber sicherzustellen, daß die Funk-Entstörbestimmungen unter Betriebsbedingungen an seiner Grundstücksgrenze eingehalten werden.

Manufacturer`s declaration

This is to certify that the equipment

Pulse Generator HP 8111A

is in accordance with the Radio Interference Requirements of Directive FTZ 1046/1984. The German Bundespost was notified that this equipment was put into circulation, the right to check the serie for compliance with the requirements was granted.

Additional Information for Test- and Measurement Equipment

If Test- and Measurement Equipment is operated with unscreened cables and/or used for measurements on open set-ups, the user has to assure that under operating conditions the Radio Interference Limits are still met at the border of his premises.

Hewlett Packard GmbH, 30. Juni 1985

253518

SAFETY SUMMARY

The following general safety precautions must be observed during all phases of operation, service, and repair of this instrument. Failure to comply with these precautions or with specific warnings elsewhere in this manual violates safety standards of design, manufacture, and intended use of the instrument. Hewlett-Packard Company assumes no liability for the customer's failure to comply with these requirements.

GENERAL – This is a Safety Class I instrument (provided with terminal for protective earthing) and has been manufactured and tested according to international safety standards.

OPERATION – BEFORE APPLYING POWER comply with the installation section. Additionally, the following shall be observed:

Do not remove instrument covers when operating.

Before the instrument is switched on, all protective earth terminals, extension cords, auto-transformers and devices connected to it should be connected to a protective earth via a ground socket. Any interruption of the protective earth grounding will cause a potential shock hazard that could result in serious personal injury.

Whenever it is likely that the protection has been impaired, the instrument must be made inoperative and be secured against any unintended operation.

Make sure that only fuses with the required rated current and of the specified type (normal blow, time delay, etc.) are used for replacement. The use of repaired fuses and the short-circuiting of fuseholders must be avoided.

Adjustments described in the manual are performed with power supplied to the instrument while protective covers are removed. Energy available at many points may, if contacted, result in personal injury.

Any adjustment, maintenance, and repair of the opened instrument under voltage should be avoided as much as possible, and when inevitable, should be carried out only by a skilled person who is aware of the hazard involved. Do not attempt internal service or adjustment unless another person, capable of rendering first aid and resuscitation is present. Do not replace components with power cable connected.

Do not operate the instrument in the presence of flammable gases or fumes. Operation of any electrical instrument in such an environment constitutes a definite safety hazard.

Do not install substitute parts or perform any unauthorized modification to the instrument.

Capacitors inside the instrument may still be charged even if the instrument has been disconnected from its source of supply.

SAFETY SYMBOLS

The apparatus will be marked with this symbol when it is necessary for the user to refer to the instruction manual in order to protect the apparatus against damage.

Indicates dangerous voltages.

Earth terminal

WARNING The WARNING sign denotes a hazard. It calls attention to a procedure, practice or the like, which, if not correctly performed or adhered to, could result in injury or loss of life. Do not proceed beyond a WARNING sign until the indicated conditions are fully understood and met.

CAUTION The CAUTION sign denotes a hazard. It calls attention to an operating procedure, practice, or the like, which, if not correctly performed or adhered to, could result in damage to or destruction of part or all of the equipment. Do not proceed beyond a CAUTION sign until the indicated conditions are fully understood and met.

WARNING

Dangerous voltages, capable of causing serious personal injury, are present in this instrument. Use extreme caution when handling, testing, and adjusting.

OPERATING AND SERVICE MANUAL

8111A PULSE/FUNCTION GENERATOR 20 MHz

(Including Option 001)

SERIAL NUMBERS

This manual applies directly to instrument with serial number 2215G01841 and higher. Any change made in instruments having serial numbers higher than the above number will be found in a "Manual Changes" supplement supplied with this manual. Be sure to examine the supplement for changes which apply to your instrument and record these changes in the manual. Backdating information for instruments with lower serial numbers can be found in Section 7 (yellow pages).

© HEWLETT-PACKARD GMBH 1984
HERRENBERGER STR. 130, D-7030 BOBLINGEN
FEDERAL REPUBLIC OF GERMANY

MANUAL PART No. 08111-90002
MICROFICHE PART No. 08111-95002

PRINTED: SEP 1984

LIST OF CONTENTS

		Page
Section 1	General Information	
1–1	Introduction	1–1
1–4	Specifications	1–1
1–6	Safety Considerations	1–1
1–8	Instruments Covered by Manual	1–1
1–10	Description	1–1
1–13	8111A Options	1–1
1–15	Accessories Supplied	1–1
1–17	Accessories Available	1–2
1–18	Recommended Test Equipment	1–2
Section 2	Installation	
2–1	Introduction	2–1
2–3	Initial Inspection	2–1
2–5	Preparation for Use	2–1
2–6	Power Requirements	2–1
⚠ 2–8	Line Voltage Selection	2–1
2–10	Power Cable	2–2
2–13	Operating Environment	2–2
2–14	Claims and Repackaging	2–2
2–15	Claims for Damage	2–2
2–17	Storage and Shipment	2–2
Section 3	Operating Instructions	
3–1	Introduction	3–1
⚠ 3–3	Special Operating Considerations	3–1
3–5	Operating Instructions	3–1
3–6	Input Mode Selection	3–1
3–7	NORMAL Mode	3–1
3–9	TRIGGER/GATE/BURST Input Modes	3–1
3–11	External Trigger Mode (TRIGGER)	3–1
3–13	Gate Mode (GATE)	3–2
3–15	Burst Mode (BURST)	3–2
3–17	Voltage-controlled Oscillator Mode (VCO)	3–2
3–19	Function, FREQUENCY and DUTY cycle/WIDTH Selection	3–3
3–21	FREQUENCY display and adjustment	3–3
3–23	DUTY CYCLE display and adjustment	3–3
3–25	WIDTH display and adjustment	3–3
3–27	ERROR Signal	3–3
3–30	START PHASE Variation	3–4
3–32	AMPLITUDE and OFFSET display and adjustment	3–4
3–34	AMPLITUDE, OFFSET and OUTPUT Attenuation	3–4
3–36	OUTPUT MODE Selection	3–4

Page

Section 4 Performance Tests

4–1 Introduction 4–1
4–3 Equipment Required 4–1
4–5 Test Record 4–1
4–7 Performance Tests 4–1
4–10 Frequency 4–2
4–11 Amplitude and Attenuation 4–4
4–12 Offset 4–5
4–13 Pulse Characteristics 4–6
4–14 Sine Characteristics 4–7
4–15 Duty Cycle 4–8
4–16 Width 4–9
4–17 Trigger, Gate, Burst 4–11
4–18 VCO-Mode 4–13

Section 5 Adjustments

5–1 General 5–1
5–2 Pre-Adjustments 5–1
5–3 VCO Adjustments 5–2
5–4 Shaper Adjustment 5–4
5–5 Width Adjustment 5–6

Section 6 Replaceable Parts

6–1 Introduction 6–1
6–3 Abbreviations 6–1
6–5 Replaceable Parts 6–1
6–8 Ordering Information 6–1

Section 7 Backdating

7–1 Introduction 7–1
7–3 Change Sequence 7–1

Section 8 Service

8–1 Introduction 8–1
8–4 Safety Considerations 8–1
8–6 After Service Safety Check 8–1
8–15 Service Blocks (Theory/Troubleshooting) 8–1
8–18 IC Information 8–2

Service Block 1 Problem Area Identification 8–15
Service Block 2 Power Supply 8–21
Service Block 3 Switch Boards 8–27
Service Block 4 Control Board 8–31
Service Block 5 Display Board 8–37
Service Block 6 Burst Boards 8–43

		Page
Service Block 7	VCO Board	8–51
Service Block 8	Width Generator	8–59
Service Block 9	Shaper Board	8–67
Service Block 10	Output Board	8–73

LIST OF TABLES

Table	Title	Page
1–1	Recommended Test Equipment	1–2
1–2	Specifications	1–3
3–1	VCO Mode Example Values	3–2
3–2	Sweepable Bands in VCO Mode	3–3
4–1	Frequency Limits	4–3
6–1	Reference Designators and Abbreviations	6–2
6–3	Replaceable Parts List	6–7
7–1	Manual Backdating Changes	7–1
8–1	Index of Assemblies	8–1
8–2	Index to Service Blocks	8–2
8–3	Schematic Diagram Notes	8–3
8–3–1	U 11 Truth Table	8–27
8–3–2	U 11 Truth Table	8–27
8–3–3	U 11, U 12 Truth Tables	8–28
8–4–1	U 6, U 11 Truth Table	8–32
8–4–2	U 8 Truth Table	8–32
8–4–3	U 9 Truth Table	8–33
8–4–4	U 12 Truth Table	8–33
8–8–5	U 13 Truth Table	8–33
8–4–6	U 17 Truth Table	8–34
8–5–1	Display Required/DVM Input Voltages	8–39
8–7–1	Test Voltages for Current Sources	8–54
8–7–2	Voltage Drops across Range Resistors	8–54
8–7–3	I up Values	8–55
8–8–1	Range Decoder (U 5) Troth Table	8–63
8–9–1	Waveform and Output Mode Selection	8–69

LIST OF ILLUSTRATIONS

Figure	Title	Page
1–1	8111A and Supplied Accessories	1–0
2–1	Line Voltage Switch Positions	2–1
2–2	Power Cables Available: Plug Identification	2–2
3–1	Controls and Connectors	3–0
3–2	Normal Mode	3–1
3–3	Trigger Mode	3–1

		Page
3–4	Gate Mode	3–2
3–5	Burst Mode	3–2
3–6	Start Phase Variation	3–4
3–7	Output Mode Differences	3–4
4–1	Frequency Test Set-up	4–2
4–2	Amplitude and Attenuation Test Set-up	4–4
4–3	Offset Test Set-up	4–5
4–4	Pulse Characteristic Test Set-up	4–6
4–5	Sine Characteristic Test Set-up	4–7
4–6	Duty Cycle Test Set-up	4–8
4–7	Width Test Set-up	4–9
4–8	Trigger, Gate, Burst Test Set-up	4–11
4–9	VCO-Mode Test Set-up	4–13
5–4	Adjustments Points Diagram	5–1
6–1	Frame Parts Diagram	6–6
8–1–1	8111A Block Diagram	8–14
8–1–2	8111A Block Diagram Overview	8–15
8–1–3	Troubleshooting Tree	8–16
8–2–1	Simplified Voltage/Current Regulating/Limiting Circuits	8–21
8–2–2	Principle of Fixed Positive Voltage Regulator	8–22
8–2–3	Principle of Fixed Negative Voltage Regulator	8–22
8–2–4	Current Monitor	8–22
8–2–5	Summing Current Monitor	8–22
8–2–6	Fault Condition Output Waveforms	8–23
8–4–1	Simplified Control Board Block Diagram	8–31
8–5–1	Simplified Dual Slope Integrating DVM	8–37
8–5–2	Dual Slope Integration Measurement Sequence	8–37
8–6–1	Burst Block Diagram	8–43
8–6–2	Burst Timing Diagram	8–44
8–6–3	Burst No. Display Timing Diagram	8–45
8–6–4	A3 Troubleshooting Data	8–46
8–6–5	Burst No. Control A9 Troubleshooting Wave forms	8–46
9–9–6	Burst No. Display Counter Troubleshooting Data	8–46
8–7–1	Simplified VCO Board Block Diagram	8–51
8–7–2	Troubleshooting Test Points	8–55
8–8–1	Simplified Width Board Block Diagram	8–59
8–8–2	Simplified Current Source Circuit	8–60
8–8–3	Simplified Width Range Selector Diagram	8–61
8–8–4	Error Detection Timing Diagram	8–61
8–8–5	Width Troubleshooting Diagram	8–62
8–9–1	Simplified Shaper Board Block Diagram	8–67
8–9–2	Current Mirror Operating Principle	8–68
8–9–3	Input Signals	8–68
8–10–3	Simplified Output Amplifier	8–73
8–10–2	HF Amplifier Simplified Diagram	8–73
8–10–3	Offset Control	8–74

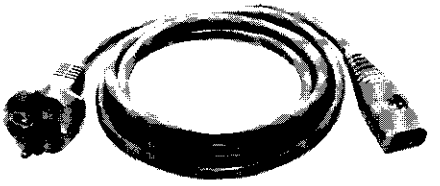

FUSE F1 or F2
375 mA 750 mA

POWER CORD

Figure 1–1. 8111A and Supplied Accessories (Instrument shown with Option 001 fitted).

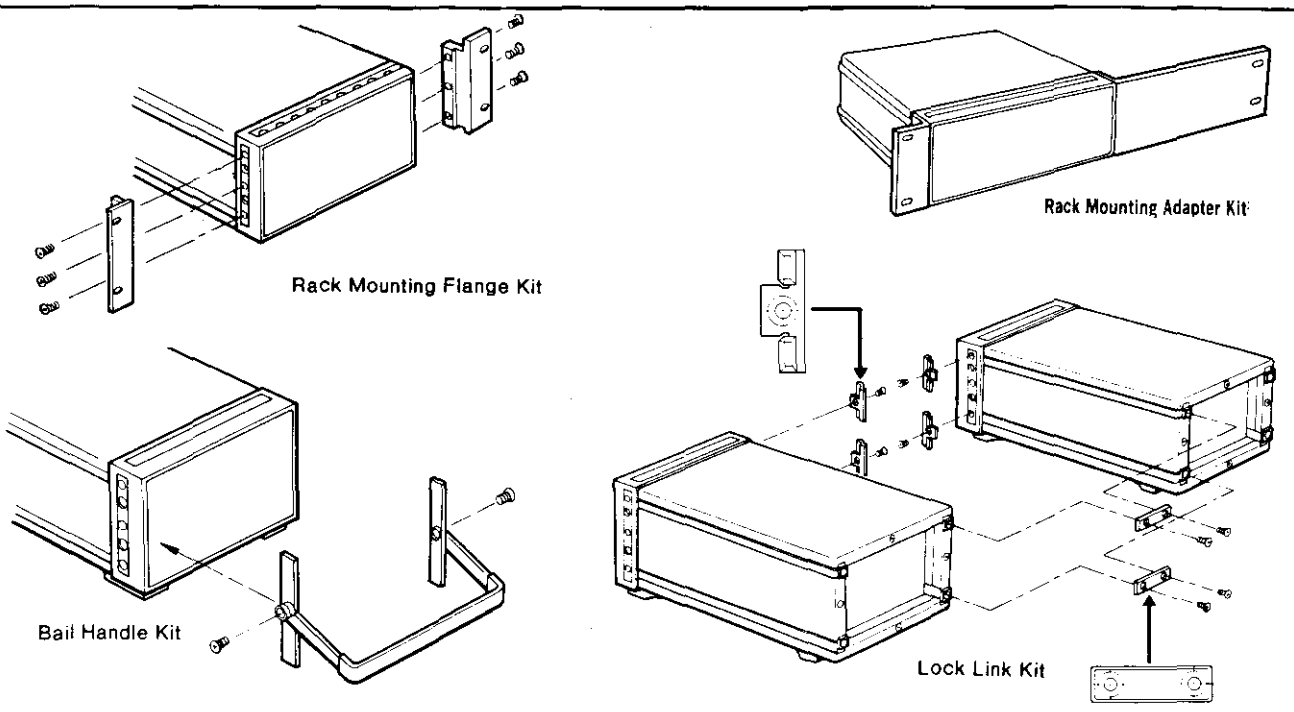

Figure 1–2. Available Rack Mounting Accessories

SECTION I
GENERAL INFORMATION

1–1 INTRODUCTION

1–2 This Operating and Service Manual contains information required to install, operate, test, adjust and service the Hewlett-Packard Model 8111A. Figure 1–1 shows the mainframe and accessories supplied. This section covers instrument identification, description, accessories, specifications, and other basic information.

1–3 A Microfiche version of this manual is available on 4 x 6 inch microfilm transparencies (order number on title page). Each microfilm contains up to 60 photoduplicates of the manual pages. The microfiche package also includes the latest Manual Changes supplement as well as all pertinent Service Notes.

1–4 SPECIFICATIONS

1–5 Instrument specifications are listed in Table 1–2. These specifications are the performance standards or limits against which the instrument is tested.

1–6 SAFETY CONSIDERATIONS

1–7 The 8111A is a Safety Class 1 instrument (it has an exposed metal chassis that is directly connected to earth via the power supply cable). Before operation, the instrument and manual, including the red safety page, should be reviewed for safety markings and instructions. These must then be followed to ensure safe operation and to maintain the instrument in a safe condition.

1–8 INSTRUMENTS COVERED BY MANUAL

1–9 Attached to the rear of this instrument is a serial number plate (Figure 1–3). The first four digits of the serial number only change when there is a significant change to the instrument. The last five digits are assigned to instruments sequentially. The contents of this manual apply directly to the instrument serial number quoted on the title page. For instruments with lower serial numbers, refer to the backdating information in Section VII of this manual. For instruments with higher serial numbers, refer to the Manual Change sheets at the end of this manual. In addition to change information, the Manual Change sheets may contain information for correcting errors in the manual. To keep this manual as up-to-date and accurate as possible, Hewlett-Packard recommends that you periodically request the latest Manual Change supplement. The supplement for this manual is identified with the manual's print date and part number, both of which appear on this manual's title page. Complimentary copies of the supplement are available from Hewlett-Packard.

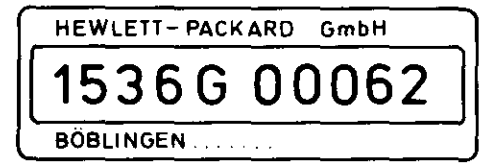

Figure 1–3. Serial Number Plate

1–10 DESCRIPTION

1–11 The 8111A is a 20 MHz, pulse/function generator suited to bench, production or service applications. It is available as either a standard instrument or, when fitted with option 001, as a pulse/function generator complete with counted burst mode capability. A carrying handle can be fitted and rackmounting adaptors are available.

1–12 The combination of front panel controls – pushbuttons and verniers – together with the digital display enables quick and easy setting up of complete waveforms with minimum (if any) requirement for additional test equipment.

1–13 8111A OPTIONS

1–14 **Option 001**. The standard 8111A can have its versatility further increased by the addition of option 001 which provides a counted burst mode capability. **Option 910** provides an extra copy of the Operating and Service Manual.

1–15 ACCESSORIES SUPPLIED

1–16 The 8111A is supplied complete with the following items:

ITEM	HP PART NUMBER
375 mA fuse for 220/240 V operation or,	2110–0421
750 mA fuse for 100/120 V operation	2110–0360
Power cable	See Figure 2–2

1–17 ACCESSORIES AVAILABLE

ITEM	HP PART NUMBER
Carrying handle -	
Bail Handle Kit	5061–2001
Rack mounting adaptors:	
Rack mounting flange and filler panel for rack mounting a single 8111A	5061–0072
Rack mounting flange	5061–0074
and lock link kit	5061–0094
for rack mounting two 8111As	

1–18 RECOMMENDED TEST EQUIPMENT

1–19 Equipment required to maintain the 8111A is listed in Table 1–1. Alternative equipment can be substituted provided that it meets or exceeds the critical specifications listed in the table.

Table 1–1. Recommended Test Equipment

INSTRUMENT	RECOMMENDED MODEL	REQUIRED CHARACTERISTICS	ADEQUATE SUBSITUTE	USE *
Counter	HP 5328A	20 MHz, Start/Stop	HP 5345A	P, A
DMM	HP3466	0.1mA - 10mA, DC	HP3465A	T
DVM	HP3455A	0.1V - 32V, AC, DC	HP3456A	P,A,T
Real Time Scope	HP 1740A	100 MHz Bandwidth	HP 1743A	P, A, T
Sampling Scope	Tek 7603 with 7T11/7S11 and S–3A	Dual channel	HP 140A/ 1410A	P, A, T
Spectrum Analyzer	HP 3580A	1 kHz – 10 kHz		P, A
or				
Distortion Analyzer	HP 339A	1 kHz – 10 kHz	HP 3585A	P, A
Spectrum Analyzer	HP 181T 8557A	500 kHz – 20 MHz		P
Pulse Generator	HP 8012B	1 Hz – 20 MHz	HP 8011A	P, A
Logic Probe	HP 545A	TTL, CMOS		T
Logic Probe	HP 10525E	ECL		T
BNC 50 Ohm Term.	10100C	50 Ohm, 2 W, 1 % Feedthrough		
Power Supply	HP 6237B	0 – 20 V	HP 6205B	A
Service Accessory				
Extender board	5060–5983	2x18 pin		T
Extender brd	5061-2160	2 x 25 pin		T
Extender cble	5180-2432			T

* P = Performance Test; A = Adjustments; T = Troubleshooting

Table 1–2. Specifications

SPECIFICATIONS

(Specifications describe the instrument's warranted performance)
The following specifications apply with 50 Ohm load resistance in a temperature range of 0° to 55°C. Output levels double when driving into high impedance (up to 32 Vpp).

WAVEFORMS

Sine, Triangle, Ramp, Square, Pulse, Haversine, Havertriangle

TIMING CHARACTERISTICS

Frequency
Range: 1.00 Hz to 20.0 MHz
Resolution: 3 digits
Accuracy: ± 5% of setting (10.0 Hz to 20.0 MHz)
(50% duty cycle) ± 10% of setting (1.00 Hz to 9.99 Hz)
Repeatability: Factor 2.5 better than accuracy
Jitter: < 0.1% + 50 ps
Stability: ± 0.2% (1 hour)
± 0.5% (24 hours)

Duty Cycle (sine, triangle, square)
Range: 10% to 90% (1 Hz to 999 kHz)
50% fixed (1 Hz to 20 MHz)
Resolution: 1%
Accuracy (1 Hz to 999 kHz): ± 1 digit, 50% fixed
± 3 digits, 20% to 80%
± 6 digits, 10% to 20% and 80% to 90%

Pulse Width
Range: 25 ns to 100 ms
Resolution: 3 digits
Accuracy: ± 5% of setting ± 2 ns
Repeatability: Factor 2.5 better than accuracy
Jitter: < 0.1% + 50 ps
Max. duty cycle: > 75% (1 Hz to 1 MHz), decreasing to > 50% at 20 MHz

OUTPUT CHARACTERISTICS

Output Impedance: 50 Ohm ± 5%. Reflection < 10%

Amplitude/Offset
Amplitude and offset are independently variable within the following two level windows.

Level window	± 80.0 mV	± 8.00V
Ampl. range	1.60 mVpp to 159.9 mVpp	160 mVpp to 16.00 Vpp
Ampl. resolution	3 1/2 digits	3 1/2 digits
Ampl. accuracy*	± 5% [0.45 dB]	± 5% [0.45 dB]
Ampl. repeatability	Factor 2.5 better than accuracy	
Offset range	0 to ± 80.0 mV	0 to ± 8.00V
Offset resolution	3 digits (best case 10 μV)	3 digits (best case 1 mV)
Offset accuracy	± 5% of setting ± 2% of amplitude ± 1 mV	± 5% of setting ± 2% of amplitude ± 20 mV
Offset repeatability	Factor 2.5 better than accuracy	

*The amplitude accuracy for sine and triangle is specified at 1 kHz. For other frequencies see the following flatness specifications.

Amplitude Flatness (50% duty cycle)	Sine	Triangle
1.00 Hz to 999 kHz	± 3% [0.26 dB]	± 3%
1.00 MHz to 20.0 MHz	± 10% [0.92 dB]	+ 10% − 15%

WAVEFORM CHARACTERISTICS

Sine (normal mode, 50% duty cycle, symmetrical mode)
Total Harmonic Distortion (THD):
< 1% [-40 dB], (10 Hz - 99.9 kHz)
< 3% [-30 dB], (100 kHz - 999 kHz)
Harmonic Signals: more than 26 dB below fundamental (1 MHz – 20 MHz) for amplitudes > 10 mVpp
THD and Harmonic Signal Distorsion may increase by 3 dB below 10°C and above 45°C

Triangle, Ramp
Non-linearity: < ± 1% (10 Hz to 99.9 kHz)
< ± 3% (1 Hz to 9.9 Hz and 100 kHz to 1 MHz)
(measured between 10% to 90% of amplitude)

Square, Pulse
Rise/Fall time: < 10 ns (10% to 90% of amplitude)
Pulse Perturbations: < ± 5% of amplitude (≥ 0.16 Vpp)
< ± 10% of amplitude (< 0.16 Vpp)

Output Modes
Switchselectable POSITIVE, NEGATIVE, SYMMETRICAL and NORMAL/COMPLEMENT output signal.

OPERATING MODES

Normal: Continuous waveform is generated
Trigger: Each input cycle generates a single output cycle
Gate: External signal enables oscillator. First output cycle synchronous with active trigger slope. Last cycle always completed.
VCO: External voltage linearly sweeps 2 full frequency decades. The actual frequency is displayed.
Modulation range: 1:100 with 0.1V to 10V
Modulation bandwidth: dc to 1kHz
Burst: Each input cycle generates a preprogrammed number (1 to 1999) of periods. Minimum time between bursts is 200 ns. (Option 001)

SUPPLEMENTARY PERFORMANCE CHARACTERISTICS

(Description of non-warranted typical performance parameters)

Ext Input: Threshold Level: 1.4V fixed
Max input voltage: ± 20V
Sensitivity: 500 mVpp
Min pulse width: 25 ns
Input impedance: 10 kOhm
Trigger slope: positive

Start Phase: Adjustable from −90° to +90°.
Usable range may decrease to −90° to 0° at 20 MHz.
Haversine and Havertriangle can be generated.

Trigger Output: TTL compatible output signal.

Man: Simulates external input.

1 Cycle: Provides a single output period in TRIG, GATE and BURST mode.

GENERAL

Warm-up Time: 15 min to meet all specifications.
Environmental: Storage temperature: -40° C to 75° C
Operating temperature: 0° C to 55° C
Humidity range: 95% R.H., 0° C to 40° C

Power: 100/120/220/240 V rms + 5%, -10%, 48-440 Hz; 70 VA max.

Weight: Net 4.6 kg (10 lbs), Shipping 6.6 kg (15 lbs)
Dimensions: 89 mm high, 213 mm wide, 375 mm deep (3.5 x 8.4 x 14.8 in)

Options: 001 Counted Burst
910 Additional Operating & Service Manual

Data subject to change

SECTION II
INSTALLATION

2–1 INTRODUCTION

2–2 This section provides installation instructions for the instrument and its accessories. It also includes information about initial inspection and damage claims, preparation for use, and packaging, storage and shipment.

2–3 INITIAL INSPECTION

2–4 Inspect the shipping container for damage. If the container or cushioning material is damaged, it should be kept until the contents of the shipment have been checked for completeness and the instrument has been checked mechanically and electrically. The contents of the shipment should be as shown in Figure 1–1 plus any accessories that were ordered with the instrument. Procedures for checking the electrical operation are given in Section 4. If the contents are incomplete, if there is a mechanical damage or defect, or if the instrument does not pass the operator's checks, notify the nearest Hewlett-Packard office. Keep the shipping materials for carrier's inspection. The HP office will arrange for repair or replacement without waiting for settlement.

2–5 PREPARATION FOR USE

WARNING

To avoid hazardous electrical shock, do not perform electrical tests when there are signs of shipping damage to any portion of the outer enclosure (covers, panels, meters).

2–6 Power Requirements

2–7 The instrument requires a power source of 100/120/220 or 240 Vrms (+5 % – 10 %) at a frequency of 48–440 Hz single phase. The maximum power consumption is 70 VA.

2–8 ⚠ Line Voltage Selection

CAUTION

BEFORE SWITCHING ON THIS INSTRUMENT make sure that the instrument is set to the local line voltage. The line voltage selector switches an be seen through the lefthand side of the instrument cover to the rear. The correct setting for the country of destination will have been made at the factory. The instrument power fuse is located behind a metal plate which can also be seen when the switches are viewed. To access the fuse and line selector switches, first DISCONNECT the power cord, then remove instrument top cover by releasing the captive securing screw at rear and sliding cover off. The fuse is accessed by removing the metal cover plate held by two securing screws (non-captive).

CAUTION

Do no change the LINE SELECTOR switch settings with the instrument on or with power connected to the rear panel.

2–9 Figure 2–1 provides information for line voltage and fuse selection:

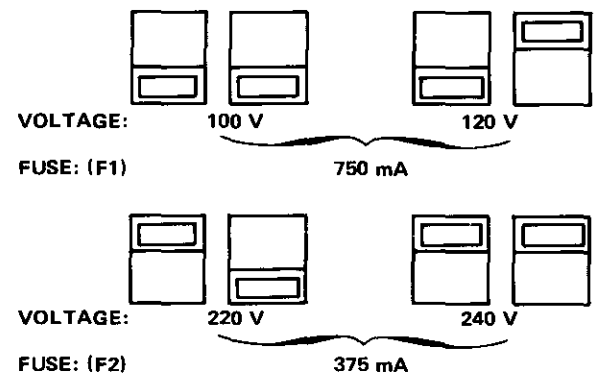

Figure 2–1. Sliding Switches Positions for different Line Voltages

2–10 Power Cable

WARNING

To avoid the possibility of injury or death, the following precautions must be followed before the instrument is switched on:

a. If this instrument is to be energized via an autotransformer for voltage reduction, make sure that the common terminal is connected to the grounded pole of the power source.

b. The power cable plug shall only be inserted into a socket outlet provided with a protective ground contact. The protective action must not be negated by the use of an extension cord without a protective conductor.

c. Before switching on the instrument, the protective ground terminal of the instrument must be connected to a protective conductor of the power cable. This is verified by checking that the resistance between the instrument chassis and the front panel and the ground pin of the power cable plug is zero ohms.

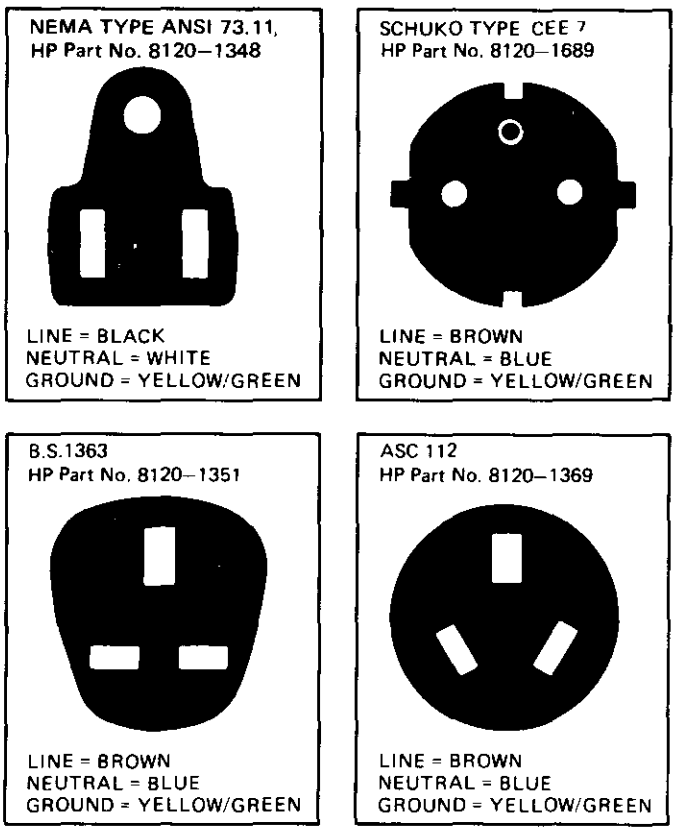

Figure 2–2. Power Cables Available: Plug Identification

2–11 In accordance with international safety standards, this instrument is equipped with a three-wire power cable. When connected to an appropriate ac power receptacle, this cable grounds the instrument cabinet. The type of power cable shipped with each instrument depends on the country of destination. Refer to Figure 2–2 for the part number of the power cords available.

2–12 The following work should be carried out by a qualified electrician and all local electrical codes must be observed. If the plug on the cable supplied does not fit your power outlet, or if the cable is to be attached to a terminal block, then cut the cable at the plug end and re-wire it. The colour coding used in the cable will depend on the cable supplied (see Figure 2–2). If a new plug is to be connected, the plug should meet local safety requirements and include the following features:

adequate load-carrying capacity (see table of specifications in Section 1)

ground connection

cable clamp

2–13 Operating Environment

The operating temperature limits are 0°C to 55°C. The specifications also apply over this temperature range.

2–14 CLAIMS AND REPACKAGING

2–15 Claims for Damage

2–16 If physical damage is evident or if the instrument does not meet specification when received, notify the carrier and the nearest Hewlett-Packard Sales/Service Office. The Sales/Service Office will arrange for repair or replacement of the unit without waiting for settlement of the claim against the carrier.

2–17 Storage and Shipment

2–18 The instrument can be stored or shipped at temperatures between –40°C and 75°C. The instrument should be protected from temperature extremes which cause condensation within it.

2–19 If the instrument is to be shipped to a Hewlett-Packard Sales/Service Office, attach a tag showing owner, return address, model number and full serial number and the type of service required. The original shipping carton

and packaging material may be re-usable but the Hewlett-Packard Sales/Service Office will also provide information and recommendations on materials to be used if the original packing is not available or re-usable. General instructions for re-packing are as follows:

1. Wrap instrument in heavy paper or plastic.

2. Use strong shipping container. A double wall carton made of 200-pound test material is adequate.

3. Use enough shock-absorbing material (3 to 4-inch layer) around all sides of instrument to provide firm cushion and prevent movement inside container. Protect control panel with cardboard.

4. Seal shipping container securely.

5. Mark shipping container FRAGILE to encourage careful handling.

6. In any correspondance, refer to instrument by model number and serial number.

8111A PULSE/FUNCTION GENERATOR

Controls and Connectors (Option 001 fitted)

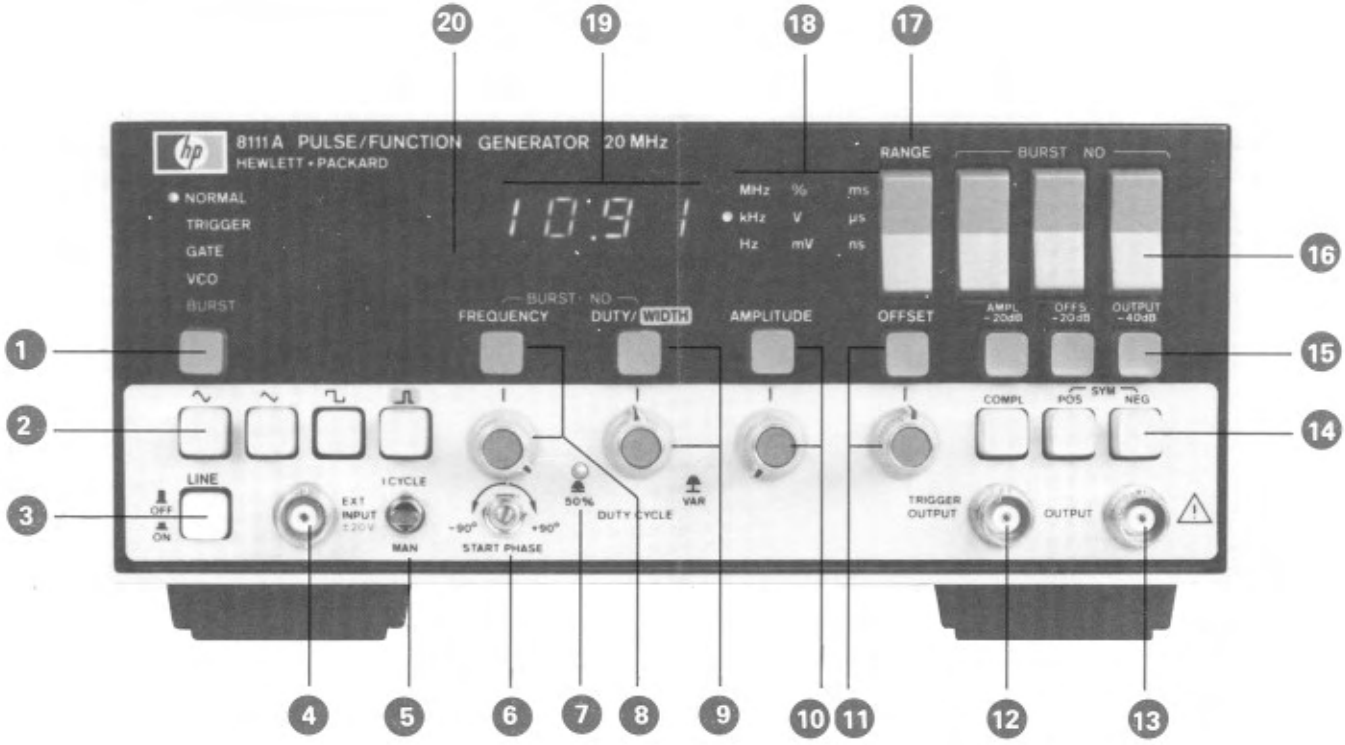

1 The pushbutton on the left-hand side of the front panel selects the operation mode. The selected mode is indicated by an LED. Each successive operation of the pushbutton changes the mode, starting from NORMAL, running through to BURST and back to NORMAL.

The operating modes are:

NORMAL – 8111A's internal rate generator free running

TRIGGER – trigger signal, either via EXT INPUT or toggle switch 5 initiates one output cycle

GATE – gate signal, either via EXT INPUT or toggle switch 5 initiates an output which is maintained as long as gate signal is present

VCO – signal applied to EXT INPUT determines the output frequency

BURST – (Option 001 only) a burst trigger either via the EXT INPUT or toggle switch initiates burst of output cycles

Figure 3–1. Controls and Connectors

2 Function pushbuttons select one of 4 possible functions: sine, triangle, square or pulse.

3 LINE ON/OFF. Primary ac power switch.

4 EXT INPUT. Connector for external signal in TRIGGER, GATE, VCO and BURST (Option 001 only) modes.

5 1 CYCLE/MANUAL switch produces a single trigger pulse when switched to MAN in the TRIGGER, GATE and BURST modes or, initiates a single cycle when switched to 1 CYCLE.

6 START PHASE. Vernier control enables variation of output signal start phase with respect to external trigger, gate or burst signal.

7 50 % DUTY CYCLE indicator, either automatically selected when frequency in MHz range or manually by pushing DUTY CYCLE vernier in. Inoperative in pulse mode.

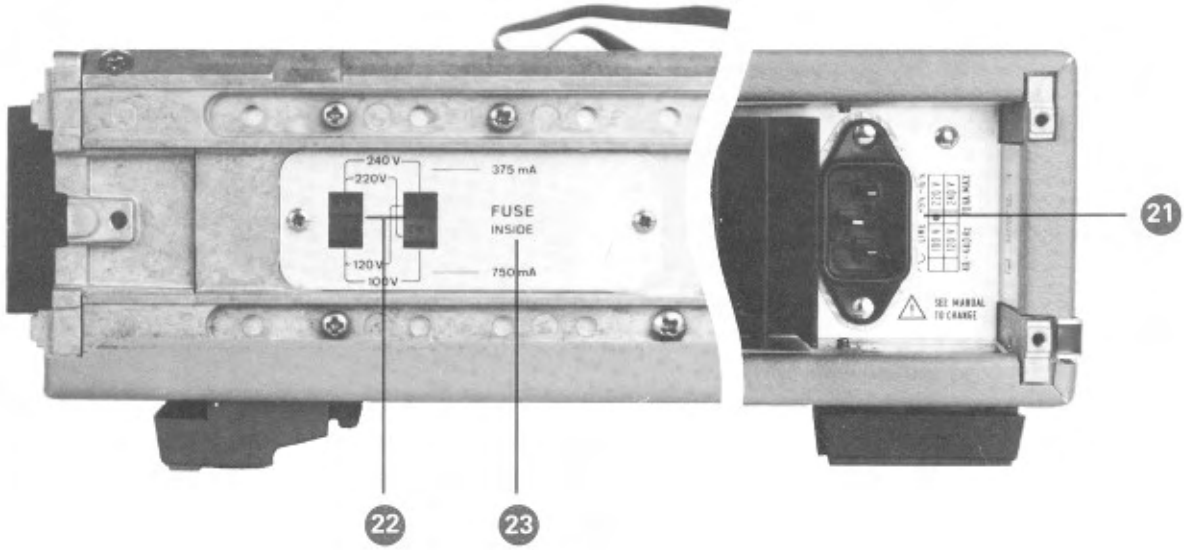

8 9 10 & 11 Parameter select pushbuttons and corresponding vernier controls which enable display and variation of the required parameter. In BURST mode, both the FREQUENCY and DUTY/WIDTH buttons must be pushed in. In sine, triangle and squarewave modes, the DUTY/WIDTH button and associated vernier (when pulled out) enable duty cycle variation (vernier pushed in and LED on for 50 % duty cycle). In pulse mode, they enable pulse width variation.

12 TRIGGER OUTPUT. BNC connector providing a TTL compatible output signal.

13 OUTPUT. BNC connector providing signal output (50 ohm source impedance.

14 Output mode pushbuttons select POSitive or NEGative polarity, SYMmetrical (both buttons pushed or released) and normal or COMPLement output signal.

15 Amplitude and Offset attenuation controls. Pushbuttons select AMPlitude −20 dB, OFFset −20 dB and OUTPUT −40 dB attenuators.

16 BURST NO. Rocker switches which enable setting up of number of pulses in a burst (Opt. 001).

17 RANGE. Rocker switch enables range change of FREQUENCY or WIDTH parameters.

18 Unit indicator. Indicates unit of currently selected parameter.

19 Display. 3 1/2 digit LED display.

20 ERROR indicator. LED out of limits indicator for incompatible period/width ratio settings or external trigger/8111A frequency setting.

21 Line receptacle. Power Cord to be plugged in here. Chassis ground for operator protection provided through cord.

22 Line voltage select sliding switches to be set to local line voltage.

23 Fuse (under metal plate) protects instrument in case of current overload. 750 mA for 100/120 V operation, 375 mA for 220/240 V operation.

SECTION III
OPERATING INSTRUCTIONS

3–1 INTRODUCTION

3–2 The following sections describe the various operating modes and operation of the front panel controls. Pushbutton and/or vernier adjustment is described only where a more detailed description than that accompanying Figure 3–1 is considered necessary.

Numbers within circles – 1 – in text are for cross-reference to Figure 3–1.

⚠ 3–3 SPECIAL OPERATING CONSIDERATIONS

3–4 Read the following sections (a, b, c & d) before applying power to the 8111A.

a. Read the safety summary (red page) at the front of this manual.

b. Ensure that the power selector switches are set properly for the power source being used to avoid instrument damage.

CAUTION

Do not change the LINE SELECTOR switch settings with the instrument on or with power connected to the rear panel.

c. Ensure load is not overdriven (up to 16 Vpp into 50 Ohm or 32 Vpp into high impedance).

d. Do not apply external voltage to the output connectors.

3–5 OPERATING INSTRUCTIONS

3–6 Mode Selection 1

3–7 NORMAL Mode

3–8 In normal mode, (automatically selected on instrument switch-on), the internal rate generator is free running, the frequency being determined by the FREQUENCY setting and the output is continuous (Figure 3–2).

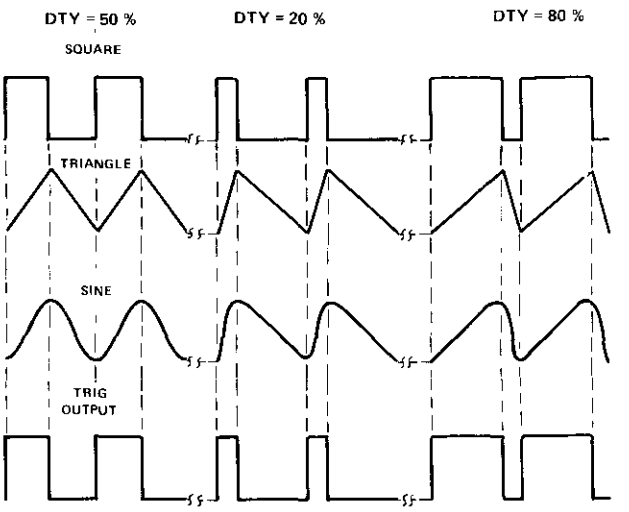

Figure 3–2. Normal Mode–various DUTY CYCLE values

3–9 TRIGGER/GATE/BURST Input Modes 1

3–10 In all three modes you can generate the trigger/gate signal either by applying an external signal to the EXT INPUT BNC connector or by switching the MAN/1 CYCLE switch to MAN. The external trigger signal frequency should not exceed the 8111A's frequency setting. If it does, the ERROR indicator will flash.

NOTE: For all three triggered modes see § 3–30 (first trigger output signal pulse width)

3–11 External Trigger Mode (TRIGGER) 1

3–12 In this mode the trigger signal initiates one complete output cycle (Figure 3–3).

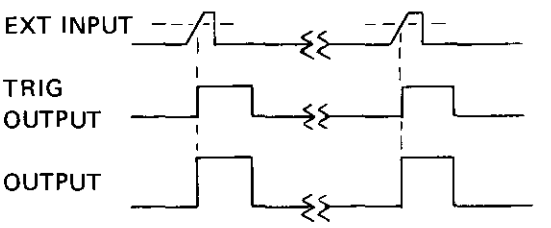

Figure 3–3. Trigger Mode (Squarewave, 50 % DUTY CYCLE)

3–13 Gate Mode (GATE) ❶

3–14 In gate mode the leading edge of the gate signal enables the 8111A's rate generator and the trailing edge disables it (Figure 3–4). The first and last cycles are always complete.

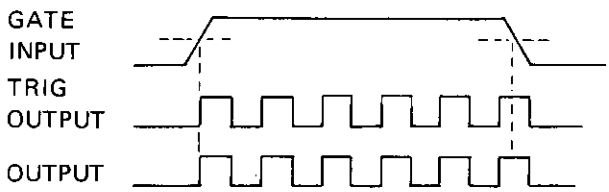

Figure 3–4. Gate Mode (Squarewave, 50 % DUTY CYCLE)

3–15 Burst Mode (BURST) ❶

3–16 In burst mode, a preset number of cycles is generated on each leading edge of a positive-going trigger signal applied to EXT INPUT when BURST mode is selected (Figure 3–5). The burst length may be set from 1 to 1999 pulses by pressing both the FREQUENCY and DUTY/WIDTH pushbuttons and operating the BURST NO rocker switches as necessary, (single digit increment by individual pushes or continuous by constant pressure) until the required burst number is displayed.

Frequency and duty cycle/pulse width selection in BURST mode is as described in 3–21—3–25.

NOTE: At the end of a triggered burst length, single pulses can be added by operation of the 1 CYCLE/MAN switch in the 1 CYCLE mode.

See §3–30 for Start Phase variation details if applicable.

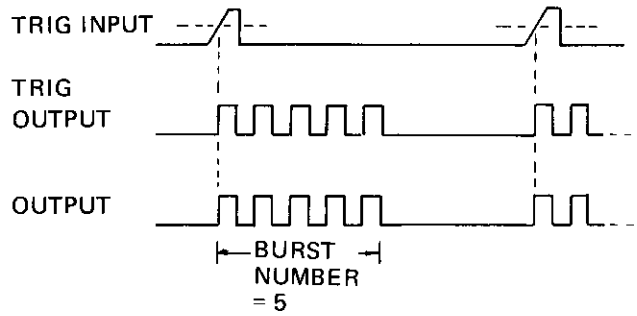

Figure 3–5. Burst Mode (Squarewave, 50 % DUTY CYCLE)

3–17 Voltage-controlled Oscillator Mode (VCO)

3–18 In VCO mode, a signal applied to the EXT INPUT connector determines the output frequency. The working range of input voltage (0.1 V to 10 V or 0.1 V to 2 V for 1.0 to 20 MHz range) sweeps the output frequency linearly over a maximum range of 2 decades. The actual range swept depends, as shown in Table 3–2, on the 8111A's frequency setting. The applied signal may change at up to 1 kHz. An example of the VCO mode is given in Table 3–1:

8111A Frequency range setting: 100 kHz – 1000 kHz

NOTE: Frequency range setting is easier to make in NORMAL mode than VCO mode.

Table 3–1. VCO Mode Example Values

EXT INPUT VOLTAGE	OUTPUT FREQUENCY
0.1 V	10 kHz
1.0 V	100 kHz
10.0 V	1000 kHz

Table 3–2 shows the relationship between external control voltage and output frequency for all ranges.

Table 3–2. Sweepable Bands in VCO Mode

8111A FREQUENCY range setting	Sweepable band			
	From		To	
	V_{in} min	f_{out} min	V_{in} max	f_{out} max
1 Hz – 10 Hz	0.1 V	0.1 Hz	10 V	10 Hz
10 Hz – 100 Hz	0.1 V	1 Hz	10 V	100 Hz
100 Hz – 1000 Hz	0.1 V	10 Hz	10 V	1000 Hz
1 kHz – 10 kHz	0.1 V	0.1 kHz	10 V	10 kHz
10 kHz – 100 kHz	0.1 V	1 kHz	10 V	100 kHz
100 kHz – 1000 kHz	0.1 V	10 kHz	10 V	1000 kHz
1 MHz – 10 MHz	0.1 V	0.1 MHz	10 V	1 MHz
10 MHz – 20 MHz	0.1 V	1 MHz	2 V	20 MHz

3–19 Function, FREQUENCY and DUTY cycle/ WIDTH Selection 2 8 & 9

NOTE: Adjustment of any of the four vernier controls can be made without the corresponding display enable pushbutton being pressed. This allows a waveform which is displayed on an oscilloscope to be quickly and easily varied merely by vernier adjustment at any time.

3–20 Selection of the required function (sine, triangle, square wave or pulse) is by pressing the appropriately labelled front panel pushbutton.

3–21 FREQUENCY display and adjustment 8

NOTE: Frequency controls are non-functional in pulse mode.

3–22 This is enabled by pressing the FREQUENCY pushbutton. Adjustment of the FREQUENCY vernier will change the displayed value, range changing is accomplished by operating the RANGE rocker switch to change either the decimal point position and/or the frequency unit.

NOTE: Selection of a MHz range will cause the 50 % DUTY CYCLE LED to illuminate when sine, triangle or square wave function selected.

3–23 DUTY CYCLE display and adjustment 9

3–24 This is enabled by pressing the DUTY/WIDTH pushbutton. Duty cycle for sine, triangle or square-wave functions can be either a fixed 50 % over the frequency range 1 Hz to 20 MHz, or 10 % to 90 % variable over 1 Hz to 999 kHz. When the DUTY CYCLE vernier is in the "pushed in" position a constant 50 % duty cycle is obtained (indicated by the 50 % LED). By pulling the vernier out, adjustment of the duty cycle within the limits detailed above is possible.

3–25 WIDTH display and adjustment 9

3–26 This is made (in pulse mode) by first pressing the DUTY/WIDTH pushbutton to display the width value and then adjusting the DUTY/CYCLE/width vernier (now functioning as a width vernier). Variation from 25 ns to 100 ms is possible (see Specification) by vernier adjustment and RANGE rocker switch operation.

3–27 ERROR Signal 20

3–28 In pulse mode, the flashing ERROR signal can be caused by either adjustment of the FREQUENCY or DUTY CYCLE/width verniers or RANGE changing, which results in the FREQUENCY/WIDTH settings being incompatible – width of pulse exceeds period (WIDTH $\geqslant$ 1/FREQUENCY).

3–29 In TRIGGER mode, the ERROR signal will occur if the external trigger frequency is incompatible with the 8111A pulse width setting (internal rate generator disabled in pulse mode) or, if it exceeds the 8111A frequency setting in function mode.

3–30 START PHASE Variation 6

3–31 In sine and triangular functions, the waveform start phase can be varied (with respect to an external trigger, gate or burst signal) by +90° to –90° by the appropriate front panel vernier. (Haversine and Haver-triangle waveforms can be generated).

NOTE: See Specification for usable range details. (At +90° first trigger output signal pulse width is reduced to minimum at high frequencies, this may affect Burst mode)

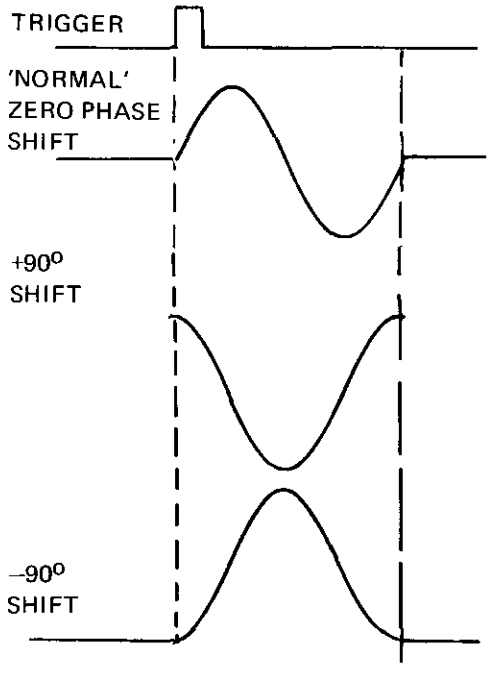

Figure 3–6. Start Phase Variation (Sinewave)

3–32 AMPLITUDE and OFFSET display and adjustment 10 & 11

3–33 Amplitude and offset values are displayed by pressing the AMPLITUDE or OFFSET pushbuttons. To vary either value, adjust the corresponding vernier until the desired figure is displayed. Range changing of either AMPLITUDE or OFFSET is made by pressing one of the three attenuator control pushbuttons as detailed in the following section (the RANGE rocker switch has no control over voltage ranges). Ensure that the maximum amplitude and offset settings do not result in the output signal exceeding the output window levels of ± 8.00 V into 50 Ohm.

3–34 AMPLITUDE, OFFSET and OUTPUT Attenuation 15

3–35 The three pushbutton controlled attenuators (AMPL–20 dB, OFFS–20 dB and OUTPUT–40 dB) can be enabled individually , or if necessary together. The two –20 dB attenuators attenuate either amplitude or offset and the –40 dB one attenuates both, so providing a maximum value of 60 dB attenuation for amplitude and offset.

3–36 OUTPUT MODE Selection 14

3–37 Three output mode pushbuttons enables normal/COMPLementary, Positive/negative or SYMmetrical output waveforms. If none of the buttons are pressed a normal symmetrical waveform will be output.

Examples of output mode differences are shown in Figure 3–7.

NOTE: Positive or negative offset can be added (or subtracted) irrespective of the selected output mode.

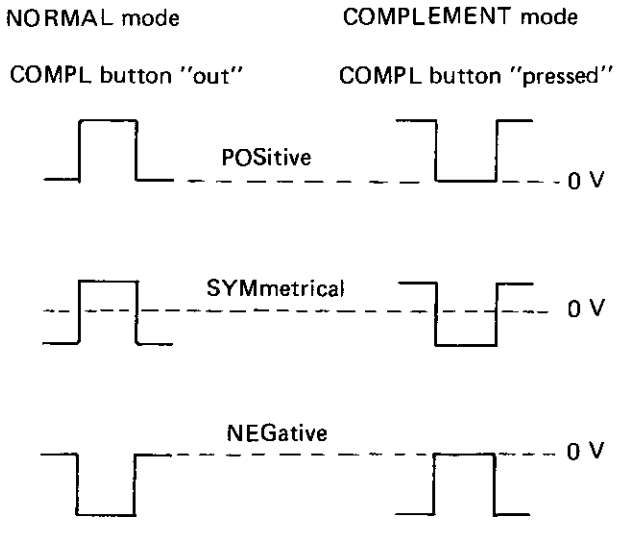

Figure 3–7. Output Mode Differences (no offset applied) (Squarewave, 50 % DUTY CYCLE)

SECTION IV
PERFORMANCE TESTS

4–1 INTRODUCTION

4–2 The procedures in this section test the electrical performance of the instrument using the specifications of Table 1–2 as performance standards. All tests can be performed without access to the interior of the instrument.

4–3 EQUIPMENT REQUIRED

4–4 Equipment required for the performance tests is listed in Table 1–1, Recommended Test Equipment. Any equipment that satisfies the critical specifications given in the table may be substituted for the recommended model(s).

4–5 TEST RECORD

4–6 Results of the performance tests may be tabulated on the Test Record at the end of the test procedures. The Test Record lists all of the tested specifications and their acceptable limits. Test results recorded at incoming inspection can be used for comparison in periodic maintenance, troubleshooting, and after repairs or adjustments.

4–7 PERFORMANCE TESTS

4–8 The performance tests given in this section are suitable for incoming inspection, troubleshooting, or preventive maintenance. During any performance test, all shields and connecting hardware must be in place. The tests are designed to verify the published instrument specifications, perform the tests in the order given and record the data on the Test Record at the end of the test procedures.

4–9 Each test is arranged so that the specification is written as it appears in Table 1–2. Next, when necessary, a description of the test and any special instructions or problem areas are included. Each test that requires test equipment has a setup drawing and a list of the required equipment. The initial steps of each procedure give control settings required for that particular test.

PERFORMANCE TESTS

4–10 FREQUENCY

SPECIFICATION

1.00 Hz – 10 Hz accuracy ± 10 % of setting
10 Hz – 20 MHz accuracy ± 5 % of setting

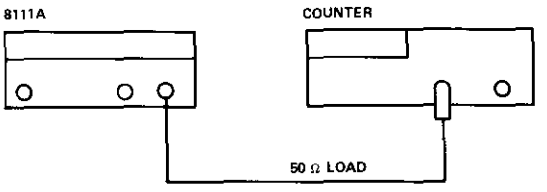

Figure 4–1. Frequency Test Set-up

EQUIPMENT

Counter
Cable Assembly BNC
Feedthrough Termination 50 Ω

PROCEDURE

1. Connect equipment as shown.

2. Set 8111A as follows:

INPUT MODE	NORM
FUNCTION	SQUARE
DUTY CYCLE	50 %
AMPLITUDE	CW
AMPLITUDE ATTENUATION	–20 dB
OFFSET	0 V
OUTPUT MODE	SYM

3. Set counter to frequency measurement.

PERFORMANCE TESTS

4. Set 8111A frequency and verify counter frequency reading as follows:

Table 4–1. Frequency Limits

8111A SETTING	COUNTER READING
1 Hz	0.900 Hz – 1.100 Hz
9.99 Hz	9.000 Hz – 11.000 Hz
10 Hz	9.500 Hz – 10.500 Hz
99.9 Hz	95.000 Hz – 105.00 Hz
100 Hz	95.00 Hz – 105.00 Hz
999 Hz	950.00 Hz – 1050.0 Hz
1 kHz	0.950 kHz – 1.050 kHz
9.99 kHz	9.500 kHz - 10.50 kHz
10 kHz	9.500 kHz - 10.50 kHz
99.9 kHz	95.00 kHz – 105.00 kHz
100 kHz	95.00 kHz – 105.00 kHz
999 kHz	950.0 kHz - 1050 kHz
1 MHz	0.950 MHz – 1.050 MHz
9.99 MHz	9.500 MHz – 10.50 MHz
10 MHz	9.500 MHz – 10.50 MHz
20 MHz	19.00 MHz – 21.00 MHz

PERFORMANCE TESTS

4–12 OFFSET

SPECIFICATION

Offset Range 0 V to ± 8 V (into 50 Ω) accuracy ± 5 % of setting and ± 2 % of amplitude and ± 20 mV

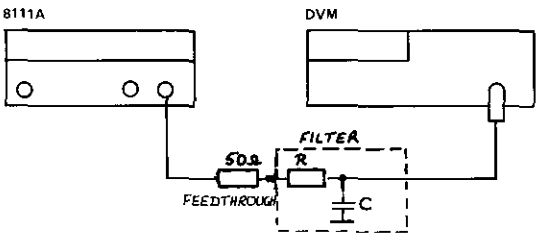

Figure 4–3. Offset Test Set-up

EQUIPMENT

DVM
Cable assembly BNC
Feedthrough Termination 50 Ω
Filter (suggested values: R = 20 kΩ, C = 2.2 μF) NOTE: Cut off frequency of the filter should be < 10 Hz

PROCEDURE

1. Connect equipment as shown.

2. Set 8111A as follows:

INPUT MODE	NORM
FUNCTION	SQUARE
DUTY CYCLE	50 %
AMPLITUDE	2 V
OUTPUT MODE	SYM
FREQUENCY	1 kHz
AMPLITUDE ATTENUATION	–20 dB

3. Set 3455A to DC measurement.

4. Set 8111A Offset and verify DVM offset reading as follows:

8111A	DVM READING
8 V	7.576 V – 8.424 V
4 V	3.776 V – 4.224 V
2 V	1.876 V – 2.124 V
0 V	–24 mV 24 mV
–2 V	–1.876 V – –2.124 V
–4 V	–3.776 V – –4.224 V
–8 V	–7.576 V – –8.424 V

PERFORMANCE TESTS

4–13 PULSE CHARACTERISTICS

SPECIFICATION

Transition times (10 % to 90 %): < 10 nsec
Preshoot, Overshoot, Ringing: ± 5 % of amplitude (≥ 0.16 Vpp)
± 10 % of amplitude (< 0.16 Vpp)

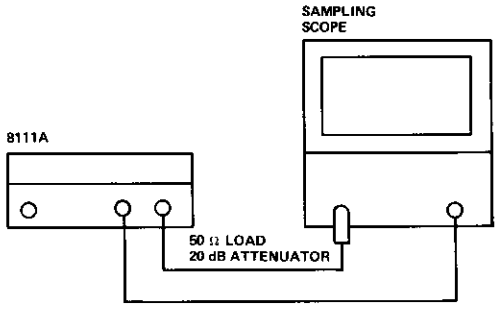

Figure 4–4. Pulse Characteristics Test Set-up

EQUIPMENT

Sampling oscilloscope
Cable assembly 2 x BNC
Feedthrough termination 50 Ω
Attenuator 20 dB

PROCEDURE

1. Connect the equipment as shown.

2. Set 8111A as follows:

INPUT MODE	NORM
FUNCTION	SQUARE
DUTY CYCLE	50 %
AMPLITUDE	16 Vpp
OUTPUT MODE	SYM
FREQUENCY	2 MHz

3. Set scope so that one cycle fills the display.

leading edge	≤ 10 nsec
trailing edge	≤ 10 nsec
pulse perturbation	≤ ± 5 % of amplitude

PERFORMANCE TESTS

4–14 SINE CHARACTERISTIC

SPECIFICATION

Sine (normal mode, 50 % duty cycle, sym)

THD $\left\{ \begin{array}{l} < 1\ \%\ [\ -40\ \text{dB}\ ],\ (10\ \text{Hz} - 99.9\ \text{kHz}) \\ < 3\ \%\ [\ -30\ \text{dB}\ ],\ (100\ \text{kHz} - 999\ \text{kHz}) \end{array} \right\}$ may increase by 3dB below 10° C and above 45° C.

for > 1 MHz to 20 MHz harmonic signals more than 26 dB below fundamental.

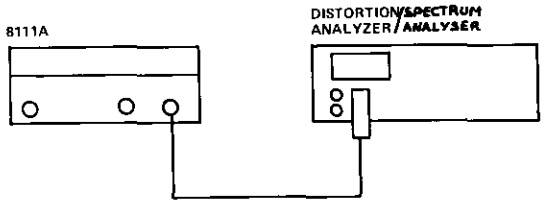

Figure 4–5. Sine Characteristics Test Set-up

EQUIPMENT

Distortion analyser/Spectrum Analyser
Cable assembly BNC to Banana
Feedthrough termination 50 Ω

PROCEDURE

1. Connect the equipment as shown.

2. Set 8111A as follows:

INPUT MODE	NORM
FUNCTION	SINE
DUTY CYCLE	50 %
AMPLITUDE	16 V
FREQUENCY	9.99 kHz
OUTPUT MODE	SYM
OFFSET	0 V

3. Either, set the distortion analyser front panel controls as required (Distortion, Range–dB/%, input range etc.) or, if using a spectrum analyser, tune it for minimum display amplitude and adjust gain so that fundamental corresponds to 0 dB. Verify that the 2nd and 3rd harmonics do not exceed the –42 and –47 dB levels respectively.

4. Verify that THD < 1 %

$$\text{THD} = \frac{\sqrt{E_1^2 + E_2^2 + E_3^2 + \ldots\ldots\ldots}}{E_0} \cdot 100\ \%$$

where E_0 = fundamental voltage amplitude and E_1, E_2 etc are the 2nd, 3rd etc. harmonic amplitudes.

When the harmonics are expressed in dB the formula becomes:

$$\text{THD} = \sqrt{10^{\frac{A_1}{10}} + 10^{\frac{A_2}{10}} + 10^{\frac{A_3}{10}} + \ldots\ldots\ldots} \cdot 100\ \%$$

where A_1 = first harmonic in dB etc.

5. Change 8111A frequency setting to 500 kHz.

6. Verify that 2nd and 3rd harmonics do not exceed the –32 dB and –37 dB levels.

7. Verify that THD < 3 % using previously stated formula.

8. Change 8111A frequency setting to 20 MHz.

9. Verify that all harmonics are less than –26 dB.

PERFORMANCE TESTS

4–15 DUTY CYCLE

SPECIFICATION

Variable range: 10 % to 90 % (1 Hz to 999 kHz)
50 % fixed (1 Hz to 20 MHz)

Accuracy: ± 1 digit, 50 % fixed
± 3 digit, 20 % to 80 %
± 6 digit, 10 % to 20 % and 80 % to 90 %

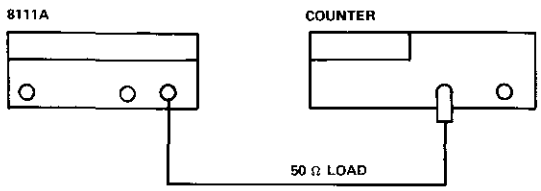

Figure 4–6. Duty Cycle Test Set-up

EQUIPMENT

Counter
Cable assembly BNC
Feedthrough termination 50 Ω

PROCEDURE

1. Connect the equipment as shown.

2. Set 8111A as follows:

INPUT MODE	NORM
FUNCTION	SQUARE
AMPLITUDE	16 Vpp
AMPLITUDE ATTENUATION	–20 DB
FREQUENCY	10.000 kHz
VAR DUTY CYCLE	50 %

3. Set counter to TI avg, Slope A+, Slope B– measurement.

4. Set 8111A Duty cycle and verify counter duty cycle reading as follows:

8111A	COUNTER READING
10 %	4 μsec – 16 μsec
20 %	17 μsec – 23 μsec
50 %	49 μsec – 51 μsec
80 %	77 μsec – 83 μsec
90 %	84 μsec – 96 μsec

PERFORMANCE TESTS

4–16 WIDTH

SPECIFICATION

Range: 25 nsec to 100 msec
Accuracy: ± 5 % of setting ± 2 nsec

1.

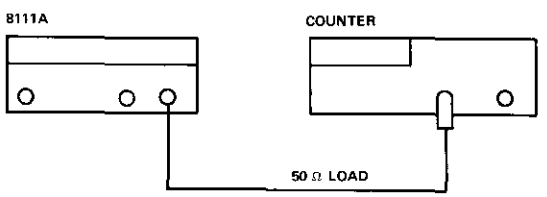

2.

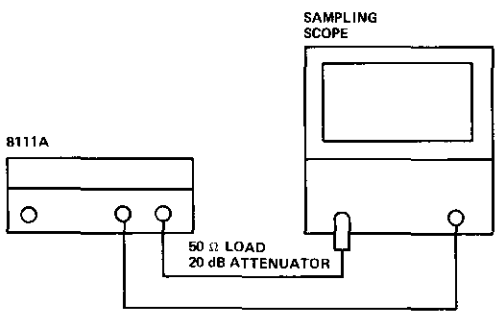

Figure 4–7. Width Test Set-up

EQUIPMENT

Counter
Sampling scope
Cable assembly 2 x BNC
Attenuator 20 dB
Feedthrough termination 50 Ω

PROCEDURE

1. Connect the equipment as shown in Figure 4–7–1.

2. Set 8111A as follows:

INPUT MODE	NORM
FUNCTION	PULSE
WIDTH	as required
AMPLITUDE	16 Vpp
OUTPUT MODE	SYM

PERFORMANCE TESTS

3. Set Counter to T.1. avg, Slope A+, Slope B− measurement.

4. Set 8111A Width and verify counter T.1 reading as follows:

8111A		COUNTER READING
5 kHz	100 nsec	93 nsec − 107 nsec
	999 nsec	948 nsec − 1051 nsec
5 kHz	1 μsec	0.948 μsec − 1.052 μsec
	9.99 μsec	9.498 μsec − 10.5 μsec
5 kHz	10 μsec	9.50 μsec − 10.5 μsec
	99.9 μsec	94.99 μsec − 104.9 μsec
500 Hz	100 μsec	95 μsec − 105 μsec
	999 μsec	949.9 μsec − 1049 μsec
50 Hz	1 msec	0.95 msec − 1.05 msec
	9.99 msec	9.499 msec − 10.49 msec
5 Hz	10 msec	9.5 msec − 10.5 msec
	99.9 msec	94.9 msec − 104.9 msec

5. Connect the equipment as shown in Figure 4−7−2.

6. Set 8111A as follow:

INPUT MODE	NORM
FUNCTION	PULSE
WIDTH	as required
AMPLITUDE	16 Vpp
OUTPUT MODE	SYM
FREQUENCY	1 MHz

7. Set scope so that one cycle fills the display.

8. Set 8111A Width and verify sampling scope width reading as follows:

8111A	SAMPLING SCOPE
25 nsec	21.75 nsec − 28.25 nsec
100 nsec	93 nsec − 107 nsec

PERFORMANCE TESTS

4–17 TRIGGER, GATE, BURST

SPECIFICATION

Each input cycle generates a single output cycle.

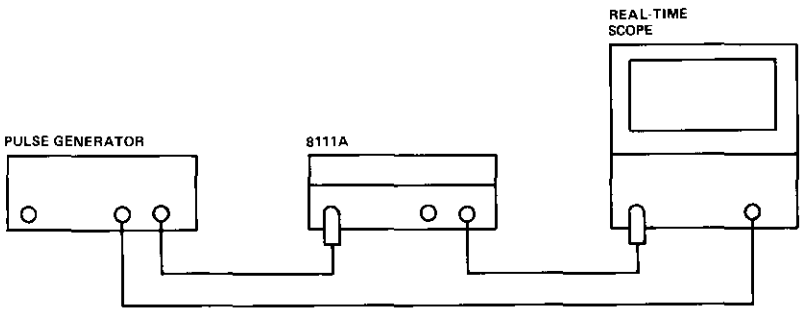

Figure 4–8. Trigger, Gate and Burst Test Set-up

EQUIPMENT

Pulse generator
Realtime scope
Cable assembly 3 x BNC
2 x Feedthrough termination 50 Ω

PROCEDURE (Trigger)

1. Connect the equipment as shown.

2. Set 8111A as follows:

INPUT MODE	TRIGGER
FUNCTION	SINE
DUTY CYCLE	50 %
AMPLITUDE	16 Vpp
OUTPUT MODE	SYM
FREQUENCY	10 kHz

3. Set pulse generator to 1 kHz and 100 nsec width.

4. Check on scope for 8111A output signals.

PERFORMANCE TESTS

PROCEDURE (Gate)

1. Connect the equipment as shown.

2. Set 8111A as follows:

INPUT MODE	GATE
FUNCTION	SINE
DUTY CYCLE	50 %
AMPLITUDE	16 Vpp
OUTPUT MODE	SYM
FREQUENCY	10 kHz

3. Set pulse generator to 1.0 kHz and 500 μsec width.

4. Check on scope for 8111A output signals.

PROCEDURE (Burst)

1. Connect the equipment as shown.

2. Set 8111A as follows:

INPUT MODE	BURST
FUNCTION	SINE
DUTY CYCLE	50 %
AMPLITUDE	16 Vpp
OUTPUT MODE	SYM
FREQUENCY	10 kHz
BURST	3

3. Set pulse generator to 1 kHz and 100 nsec width.

4. Check on scope for 8111A output signals.

PERFORMANCE TESTS

4–18 VCO-MODE

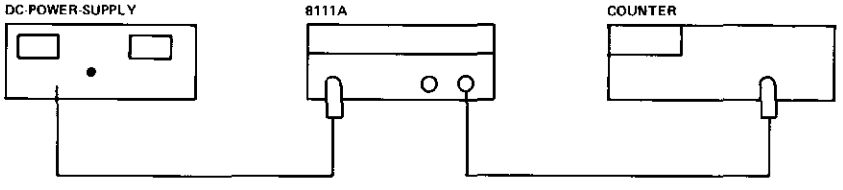

Figure 4–9. VCO-Mode Test Set-up

EQUIPMENT

DC Power Supply
Counter
Cable assembly BNC and BNC-Banana
2 x Feedthrough termination 50 Ω

PROCEDURE

1. Connect the equipment as shown.

2. Set 8111A as follows:

INPUT MODE	VCO
FUNCTION	SQUARE
DUTY CYCLE	50 %
AMPLITUDE	16 Vpp
OUTPUT MODE	SYM
FREQUENCY RANGE	1–10 kHz

3. Set counter to frequency.

4. Set DC Supply for .1 to 10 V and verify counter frequency (typical).

DC POWER SUPPLY	8111A	COUNTER
.1 V	.10 kHz	.10 kHz
1 V	1.00 kHz	1.00 kHz
10 V	10.00 kHz	10.00 kHz

PERFORMANCE TESTS RECORD

Hewlett-Packard Company
Model 8111A/8111A Option 001
Pulse/Function Generator

Instrument Serial No. _____
Tested by _____
Date _____

Paragraph No.	Test Description and parameter values	Result		
		Minimum	Actual	Maximum
4–10	Frequency			
	1 Hz	0.900 Hz		1.100 Hz
	9.99 Hz	9.000 Hz		11.000 Hz
	10 Hz	9.500 Hz		10.500 Hz
	99.9 Hz	95.000 Hz		105.00 Hz
	100 Hz	95.00 Hz		105.00 Hz
	999 Hz	950.00 Hz		1050.0 Hz
	1 kHz	0.950 kHz		1.050 kHz
	9.99 kHz	9.950 kHz		10.50 kHz
	10 kHz	9.950 kHz		10.50 kHz
	99.9 kHz	95.00 kHz		105.00 kHz
	100 kHz	95.00 kHz		105.00 kHz
	999 kHz	950.00 kHz		1050.0 kHz
	1 MHz	0.950 MHz		1.050 MHz
	9.99 MHz	9.500 MHz		10.50 MHz
	10 MHz	9.500 MHz		10.50 MHz
	20 MHz	19.00 MHz		21.00 MHz
4–11	Amplitude and Attenuation			
(1)	Amplitude			
	Square			
	16 Vpp	7.600 V		8.40 V
	10 Vpp	4.750 V		5.25 V
	1.6 Vpp	0.760 V		0.84 V
	Triangle			
	16 Vpp	4.388 V		4.85 V
	10 Vpp	2.742 V		3.031 V
	1.6 Vpp	0.439 V		0.485 V
	Sine			
	16 Vpp	5.374 V		5.940 V
	10 Vpp	3.359 V		3.712 V
	1.6 Vpp	0.537 V		0.594 V

PERFORMANCE TESTS RECORD

Paragraph No.	Test Description and parameter values	Result Minimum	Result Actual	Result Maximum
4–11 cont'd	Amplitude and Attenuation			
	Attenuation			
	10 Vpp	4.750 V		5.250 V
	–20 dB (1 Vpp)	0.475 V		0.525 V
	–40 dB (100 mVpp)	47.5 mV		52.5 mV
	–60 dB (10 mVpp)	4.75 mV		5.25 mV
4–12	Offset			
	8 V	7.576 V		8.424 V
	4 V	3.776 V		4.224 V
	2 V	1.876 V		2.124 V
	0 V	–24 mV		24 mV
	–2 V	–1.876 V		–2.124 V
	–4 V	–3.776 V		–4.224 V
	–8 V	–7.576 V		–8.424 V
4–13	Pulse Characteristics			
	leading edge	⩽ 10 nsec	yes ☐	no ☐
	trailing edge	⩽ 10 nsec	yes ☐	no ☐
	pulse pertubation	⩽ ± 5 % of amplitude	yes ☐	no ☐
4–14	Sine Characteristics (Harmonic level)			
	Frequency			
	9.99 kHz (2nd Harmonic)		_____	–42 dB
	9.99 kHz (3rd Harmonic)		_____	–47 dB
	9.99 kHz (THD)		_____ %	< 1 %
	500 kHz (2nd Harmonic)		_____	–32 dB
	500 kHz (3rd Harmonic)		_____	–37 dB
	500 kHz (THD)		_____ %	< 3 %
	20 MHz (worst Harmonic)		_____	–26 dB
4–15	Duty Cycle			
	10 %	4 μs		16 μs
	20 %	17 μs		23 μs
	50 %	49 μs		51 μs
	80 %	77 μs		83 μs
	90 %	84 μs		96 μs

PERFORMANCE TESTS RECORD

Paragraph No.	Test Description and parameter values	Result		
		Minimum	Actual	Maximum
4–16	Width			
	5 kHz 100 ns	93 ns		107 ns
	999 ns	948 ns		1051 ns
	5 kHz 1 μs	0.948 μs		1.052 μs
	9.99 μs	9.498 μs		10.5 μs
	5 kHz 10 μs	9.50 μs		10.5 μs
	99.9 μs	94.99 μs		104.9 μs
	500 Hz 100 μs	95 μs		105 μs
	999 μs	949.9 μs		1049 μs
	50 Hz 1 ms	0.95 ms		1.05 ms
	9.99 ms	9.499 ms		10.49 ms
	5 Hz 10 ms	9.5 ms		10.5 ms
	99.9 ms	94.9 ms		104.9 ms
	25 ns	21.75 ns		28.25 ns
	100 ns	93 ns		107 ns
4–17	Trigger, Gate, Burst			
	Trigger	Output Signals	yes ☐	no ☐
	Gate	Output Signals	yes ☐	no ☐
	Burst	Output Signals	yes ☐	no ☐
4–18	VCO Mode			
	0.1 V	0.10 kHz	yes ☐	no ☐
	1.0 V	1.00 kHz	yes ☐	no ☐
	10 V	10.00 kHz	yes ☐	no ☐

SECTION V
ADJUSTMENT PROCEDURE

5-0 GENERAL

The adjustment procedure is divided into the following sections:

1. Power supply regulator	para. 5-1
2. Pre-adjustment	para. 5-2
3. Voltage Controlled Oscillator	para. 5-3
4. Shaper	para. 5-4
5. Width generator	para. 5-5

If the complete instrument needs to be recalibrated, it is recommended that the adjustments are made in the sequence as listed above.

If only a part of the instrument has to be recalibrated, for example after replacement of a faulty component on a board, the procedure should be started at the appropriate paragraph. Subsequent sections must be checked through and adjustments made if necessary. Checking and/or adjustment of values in previous sections is necessary only in the case of the Shaper board since it requires inputs from the VCO which might need to be adjusted for correct Shaper board calibration after repair or replacement.

NOTE the following points:

Allow the instrument a 15 minute warm-up time with closed cover. Keep cover closed between adjustments.

An adjustment points location diagram (Figure 5-4) is given at the end of this section.

All measurements are made at the 8111A output except:

- Power Supply output voltages
- Control voltage for VCO
which are made at special testpoints.
All specification of the 8111A apply with 50 Ohms load resistance, so ensure that the 8111A output is terminated with 50 Ohms during amplitude and transistion time measurement.

5-1 POWER SUPPLY REGULATOR ADJUSTMENT

EQUIPMENT:
DVM

PROCEDURE

1. Connect DVM low terminal to ground(⊥)test point on board A2 and measure the output voltages at the other A2 test points.
2. Adjust +5V via A2 R5 for +5V ±10mV (TP+5V)
3. Adjust +15V via A2 R37 for +15V ±10mV (TP+15V)
4. Measure -5.2V. It should be -5.2V ±100mV (TP-5.2V)
   Measure -15V. It should be -15V +/- 750mV (TP-15V)
   Measure -23V. It should be -23V +/- 200mV (TP-23V)
   Measure +23V. It should be +23V +/- 200mV (TP+23V)

5-2 PRE-ADJUSTMENT

EQUIPMENT:
Oscilloscope, 50 Ohm feedthrough.

Waveform pre-adjustments

PROCEDURE

1. Set 8111A:

OPERATING MODE . . . . . NORMAL
WAVEFORM . . . . . square
FREQUENCY RANGE 1-10kHz
FREQUENCY (VERNIER) . . . . . approx. 2kHz
DUTY CYCLE . . . . . fixed 50%
AMPLITUDE (VERNIER) . . . . . .approx. 8V
AMPL ATTENUATOR . . . . . released
OFFSET (VERNIER) 0V
OFFSET ATTENUATOR . . . . . released
OUTPUT ATTENUATOR . . . . . released
OUTPUT MODE . . . . . SYM, NORM

2. Connect 8111A output to Scope. Make sure, that the output is terminated with 50 Ohms.
3. Adjust A6R50 to its mid-position then adjust A6R33 for symmetrical square wave output.
4. Adjust A8 R14 for optimal square wave on scope (minimum distortion).
5. Disconnect Shaper Board A6 from connector. Adjust A8 R55 for OV ±1mV baseline offset.

Amplitude pre-adjustment

6. Reconnect A6.
7. Set 8111A :

AMPLITUDE (VERNIER) ..... CW

8. Adjust A6 R6 for 16V±500mV displayed on scope.
9. Set 8111A:

AMPLITUDE (VERNIER . . . . . .CCW

Adjust A6R23 for symmetrical output.

10. Turn A6 R27 fully CCW then adjust for 1.6V ±100mV.
11. Set 8111A :

AMPLITUDE (VERNIER) ..... CW

12. If the amplitude is not 16V±500mV, repeat steps 8 to 11.
13. Set 8111A :

WAVEFORM ..... Triangle

14. Adjust A5 R10 for 16V+/-500mV.

The amplitude of the triangle should be the same as the amplitude of the square.

5-3 VCO ADJUSTMENT

EQUIPMENT:

Counter, DVM, Fine adjustable Power Supply, Sampling scope, 20dB Attenuator (2W)

PROCEDURE

1. Set 8111A :

OPERATING MODE ..... NORMAL
WAVEFORM ..... square
FREQUENCY RANGE 1-10kHz
FREQUENCY (VERNIER) ..... CW
DUTY CYCLE ..... fixed 50%
AMPLITUDE (VERNIER) ..... CW
AMPL ATTENUATOR ..... -20dB
OFFSET (VERNIER) 0V
OFFSET ATTENUATOR ..... released
OUTPUT ATTENUATOR ..... released
OUTPUT MODE ..... SYM, NORM

Fixed 50% Duty Cycle Adjustment

2. Set Counter: TIME INTERVAL A→B Slope A⎍ Slope B⎍ COM A, Trigger level 0V

If possible use an averaged TI measurement over 100 time intervals.

3. Connect 8111A output to Counter Input A.
4. Note value displayed by counter
5. Set Counter: Slope A⎍ Slope B⎍.
6. Adjust A5 R65 for same value as in 4.) ± 10ns.

NOTE: This adjustment can also be made with the help of a spectrum analyser. For a 50% Duty Cyle the 2nd, 4th,etc.,harmonics must disappear. This simplifies the minimizing of the difference between NORM and COMPL mode.

Frequency Adjustment For Variable Duty Cycle

7. Set Counter to PERIOD A. If possible use an averaged period-measurement over 100 periods.
8. Note value displayed by counter.
9. Set 8111A:

DUTY CYCLE MODE ..... variable
DUTY CYCLE (VERNIER) 40-60%

10. Adjust A5 R50 for same value (as in 8.) ±100 nS.

VCO Linearity adjustment

11. Set 8111A:

OPERATING MODE ..... VCO
WAVEFORM ..... square
FREQUENCY RANGE 1-10kHz
FREQUENCY (VERNIER) ..... CW
DUTY CYCLE ..... fixed 50%
AMPLITUDE (VERNIER) ..... CW
AMPL ATTENUATOR ..... -20dB
OFFSET (VERNIER) 0V
OFFSET ATTENUATOR ..... released
OUTPUT ATTENUATOR ..... released
OUTPUT MODE ..... SYM, NORM

12. Connect DVM between A5 TP3 and TP4. The position of TP3 and TP4 is shown in Figure 5-1.

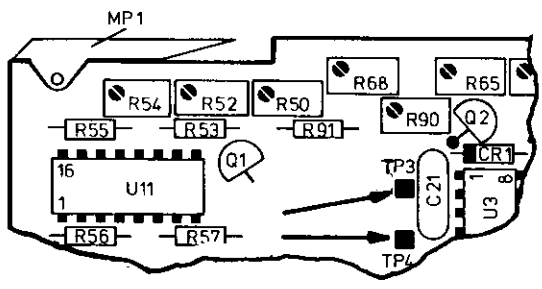

Figure 5–1.

13. Connect 10V DC ±50mV to EXT INPUT.
14. Note voltage between TP3 and TP4, displayed by the DVM
15. Connect 100mV DC ±0.5mV to EXT INPUT.
16. Adjust A5 R90 for 1/100 of value (from 14.) on DVM.
17. Disconnect DVM from TP3/TP4.

Positive Slope Timing Linearity Adjustment

18. Set Counter: TIME INTERVAL A→B Slope A/ Slope B\ COM A, Trigger level OV
19. Adjust A5 R86 for 5000μs. ±20μs.

Negative Slope Timing Linearity Adjustment

20. Set Counter: Slope A\ Slope B/.
21. Adjust A5 R88 for 5000μs ±20μs.
22. Disconnect the external voltage.

Frequency Adjustment (1Hz-1000kHz)

23. Set 8111A:

OPERATING MODE ..... NORMAL
WAVEFORM ..... square
FREQUENCY RANGE 1-10kHz
FREQUENCY (VERNIER) 10.00kHz
DUTY CYCLE ..... fixed 50%
AMPLITUDE (VERNIER) ..... CW
AMPL ATTENUATOR ..... -20dB
OFFSET (VERNIER) 0V
OFFSET ATTENUATOR ..... released
OUTPUT ATTENUATOR ..... released
OUTPUT MODE ..... SYM, NORM

24. Set Counter: FREQENCY A.
Adjust A5 R54 for 10.00 kHz ±0.1kHz

Variable Duty Cycle Display Adjustment

25. Set 8111A:

DUTY CYCLE ..... variable
DUTY CYCLE VERNIER ..... as required

26. Set Counter: TIME INTERVAL A→B, Slope A/ Slope B\ COM A, Trigger level 0V
If possible, use an averaged time interval measurement over at least 10 time intervals.
27. Adjust 8111A DUTY CYCLE VERNIER for 50μs ±0,1μs on counter.
28. Adjust A5 R68 for 50% duty cycle displayed by 8111A.

Overshoot & Transition Time

29. Set 8111A:
OPERATING MODE ..... NORMAL
WAVEFORM ..... square
FREQUENCY RANGE 1-10MHz
FREQUENCY (VERNIER) ..... approx 2MHz
DUTY CYCLE ..... fixed 50%
AMPLITUDE (VERNIER) ..... CW
AMPL ATTENUATOR ..... released
OFFSET (VERNIER) ..... CCW
OFFSET ATTENUATOR ..... released
OUTPUT ATTENUATOR ..... released
OUTPUT MODE ..... POS,NORM

30. Connect 8111A output to sampling scope as shown in Fig. 5-2

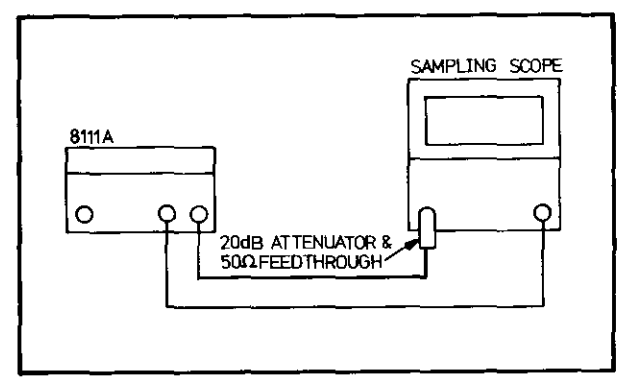

Figure 5–2

31. Adjust A8C14 for overshoot <5%.
32. Set 8111A:

OFFSET (VERNIER) ..... CW
OUTPUT MODE ..... NEG,NORM

33. Check that overshoot <5%.
34. Set 8111A:

AMPLITUDE (VERNIER) ..... CCW
OFFSET (VERNIER) ..... -7.2V
OUTPUT MODE ..... SYM,NORM

35. Check that transition times <10nS.

Flatness

36. Set 8111A:

OPERATING MODE ..... NORMAL
WAVEFORM ..... Triangle
FREQUENCY RANGE 100-1000kHz
FREQUENCY (VERNIER) approx500kHz
DUTY CYCLE ..... fixed 50%
AMPLITUDE (VERNIER) ..... CW
AMPL ATTENUATOR ..... released
OFFSET (VERNIER) 0V
OFFSET ATTENUATOR ..... released
OUTPUT ATTENUATOR ..... released
OUTPUT MODE ..... SYM, NORM

37. Adjust Input Vernier of the Sampling scope for a 100% display of the waveform.

38. Set 8111A:
FREQUENCY RANGE ..... 10-20 MHz
FREQUENCY (VERNIER) ..... CW

39. Adjust A5 R5 for low level -4%.
Adjust A5 R8 for high level -4%.

Frequency Adjustment (10-20MHz)

40. Set 8111A:
FREQUENCY (VERNIER) 20MHz

41. Set Counter: FREQUENCY A.
42. Connect 8111A output to Counter Input A.
43. Adjust A5 C3 for 20 MHz ±0.2MHz.

Frequency Adjustment (1-10 MHz)

44. Set 8111A:
FREQUENCY RANGE 1-10MHz
FREQUENCY (VERNIER) 10.00MHz

45. Adjust A5 R52 for 10MHz ±0.1MHz.
Repeat 30-45 twice.

5-4 SHAPER ADJUSTMENT

EQUIPMENT:
DVM, Lowpass filter as shown in Figure 5-3, Scope, Spectrum analyser (Distortion analyser)

PROCEDURE

Square Amplitude Adjustment

1. Set 8111A:

OPERATING MODE ..... NORMAL
WAVEFORM ..... square
FREQUENCY RANGE 1-10kHz
FREQUENCY (VERNIER) ..... CW
DUTY CYCLE ..... fixed 50%
AMPLITUDE (VERNIER) ..... CW
AMPL ATTENUATOR ..... released
OFFSET (VERNIER) 0V
OFFSET ATTENUATOR ..... released
OUTPUT ATTENUATOR ..... released
OUTPUT MODE ..... SYM, NORM

2. Set DVM to AC, 10V Range.
3. Connect 8111A output to DVM input.
4. Adjust A 6 R24 for maximum amplitude
5. Set 8111A:

AMPLITUDE (VERNIER) 16.00V

Adjust A6R50 to its center position.
6. Adjust A6 R6 for 8V ±400 mV.

Square Normal/Complement Error

7. Set DVM to DC, 10V Range. Use DVM built in filter function, otherwise use set-up as shown in Figure 5-3

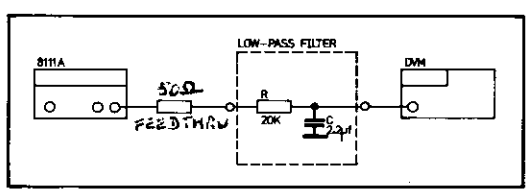

Figure 5-3

8. Change 8111A OUTPUT MODE from NORM to COMPL and back.
9. Check that the difference between NORM and COMPL does not exceed 10mV. If necessary adjust A6 R16 for minimum difference.

Symmetry Adjustment

10. Adjust A6 R33 for OV ±10mV.
11. Set 8111A:

AMPLITUDE VERNIER 1.60V

12. Adjust A6 R23 for OV ±10mV.

Minimum Amplitude Adjustment

13. Set DVM to AC, 10V Range.
14. Adjust A6 R27 for 825mV ±5mV

NOTE: Steps 6 and 14 are interdependent and must therefore be repeated until the values are within tolerance.

Triangle Amplitude Adjustment

15. Set 8111A:

WAVEFORM ..... Triangle
AMPLITUDE (VERNIER) 16.00V
AMPL ATTENUATOR ..... released
OUTPUT MODE ..... SYM,NORM

16. Set DVM to AC.
17. Adjust A5 R10 for 4.62V ±0.1V.

THD Adjustment

18. Set 8111A:

OPERATING MODE ..... NORMAL
WAVEFORM ..... sine
FREQUENCY RANGE 1-10kHz
FREQUENCY (VERNIER) 3kHz
DUTY CYCLE ..... fixed 50%
AMPLITUDE (VERNIER) 16.00V
AMPL ATTENUATOR ..... released
OFFSET (VERNIER) 0V
OFFSET ATTENUATOR ..... released
OUTPUT ATTENUATOR ..... released
OUTPUT MODE . . . . . SYM, NORM/COMPL as required

19. Connect 8111A to a spectrum analyser and adjust its input amplifier so that the fundamental equals OdB on display.
20. Adjust A6R10/R17 for THD < 1% for NORM and COMPL modes.Ensure that minimum difference exists between the corresponding harmonic values in each mode,i.e. the 2nd harmonic value in NORM should be as close as possible to the 2nd harmonic in COMPL etc.

A6 R10 varies the 2nd harmonic. It should be ≤-45dB
A6 R17 varies the 3rd harmonic. It should be ≤-47dB
NOTE: For this adjustment,the use of a distortion analyser enables a direct readout of the THD percentage value.

Sine Amplitude Adjustment

21. Connect 8111A output to DVM input.
22. Set DVM to AC, 10V Range
23. Adjust A6 R18 for 5.66V±0.2V.

Triangle Normal/Complement Error

24. Set 8111A:

OPERATING MODE ..... NORMAL
WAVEFORM ..... Triangle
FREQUENCY RANGE 1-10kHz
FREQUENCY (VERNIER) ..... CW
DUTY CYCLE ..... fixed 50%
AMPLITUDE (VERNIER) 16.00V
AMPL ATTENUATOR ..... released
OFFSET (VERNIER) 0V
OFFSET ATTENUATOR ..... released
OUTPUT ATTENUATOR ..... released
OUTPUT MODE ..... SYM, NORM

25. Set DVM to DC, 10V Range. Use built-in filter or set-up as shown in Figure 5-3.
26. Change output mode from NORM to COMPL and back.
27. Adjust A6 R15 for minimum difference between NORM and COMPL output mode

Sine Normal/Complement Error

28. Set 8111A:

WAVEFORM ..... Sine

29. Change output mode from NORM to COMPL and back.
30. Adjust A6 R14 for minimum difference between NORM and COMPL output mode.

If difference >100mV, adjust A6R50 for <40mV difference and repeat the the procedure for Square Normal/Compl Error and Triangle Normal /Compl Error. Check again for minimum (>100mV) difference in Sine Normal/Compl Error.

POS/NEG-Baseline Adjustment

31. Set 8111A:

WAVEFORM ..... SQUARE
AMPLITUDE (VERNIER) ..... CCW
AMPL ATTENUATOR ..... -20dB
OUTPUT MODE .....NORM,POS/NEG as required

32. Connect 8111A output to scope input.
33. Set Scope to 0.02V/Division.
34. Adjust A6 R36 for minimum baseline difference between POS and NEG output mode.

5-5 WIDTH ADJUSTMENT

EQUIPMENT:
Counter

1. Set 8111A:

OPERATING MODE . . . . . NORMAL
WAVEFORM . . . . . Pulse
FREQUENCY RANGE 1-10kHz
FREQUENCY (VERNIER) 5kHz
WIDTH RANGE 10-100µs
WIDTH VERNIER 40.0µs
AMPLITUDE (VERNIER) . . . . . CW
AMPL ATTENUATOR . . . . . −20dB
OFFSET (VERNIER) 0V
OFFSET ATTENUATOR . . . . . released
OUTPUT ATTENUATOR . . . . . released
OUTPUT MODE . . . . . SYM, NORM

2. Set Counter: TIME INTERVAL A→B Slope A⎍
   Slope B⎍COM A Trigger level 0V

If possible use an averaged TI- measurement over at least 10 time intervals.

3. Set A4 R34 to its mid position.
4. Adjust A4 R41 for 40µs ±0,4µs.
5. Set 8111A:

WIDTH RANGE 100-1000ns
WIDTH (VERNIER) 400ns

4. Adjust A4 C1 for 400ns ±4ns.
7. Set 8111A:

WIDTH RANGE 25-100ns
WIDTH (VERNIER) 100.0ns

8. Connect 8111 A OUTPUT to a sampling scope (use 20dB attenuator)
9. Adjust A4 R34 for 100ns ±2ns.
10. Set 8111A:

WIDTH (VERNIER) 25.0ns

11. Check pulse width for 25ns ±2ns

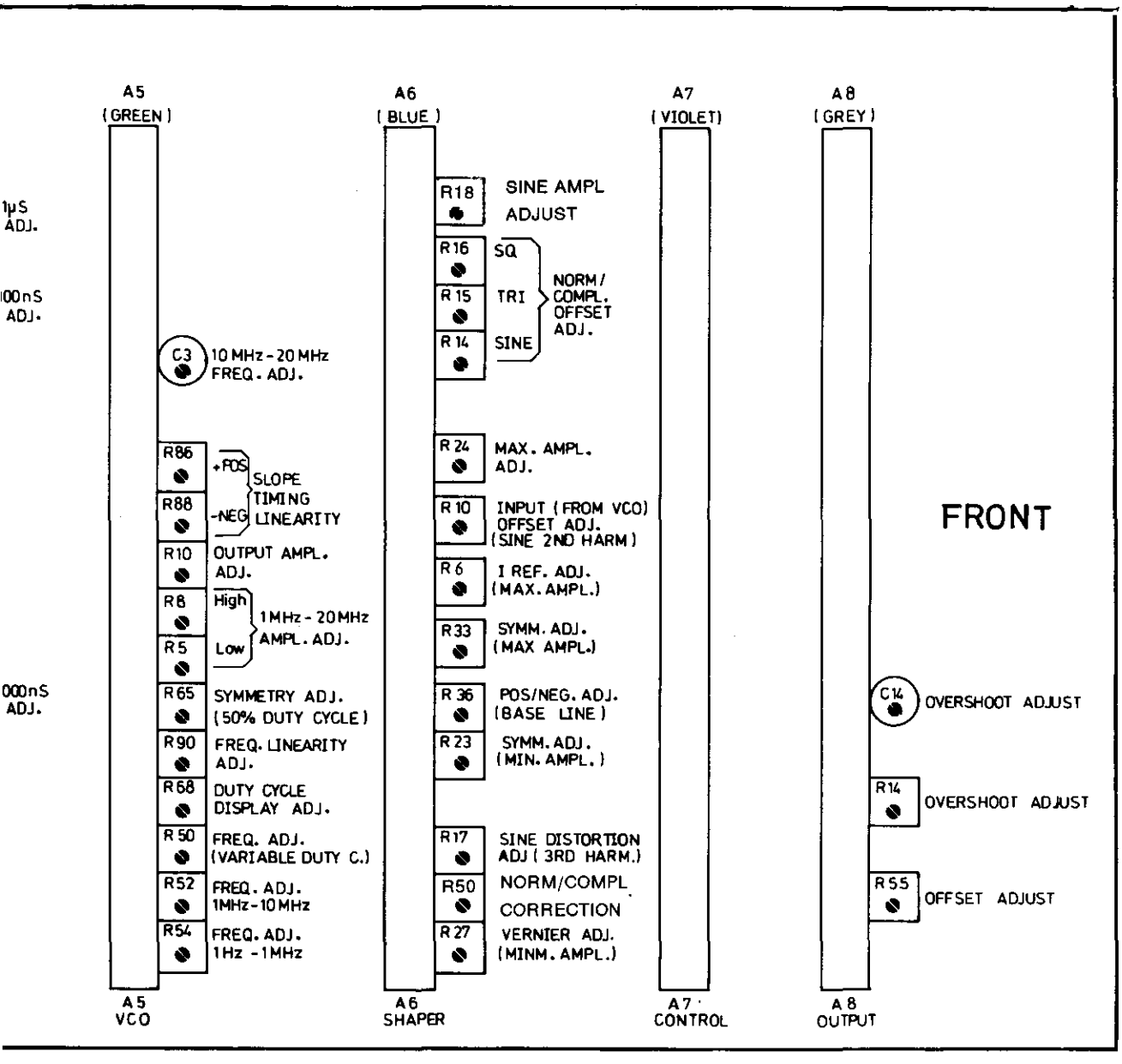

Figure 5–2. Adjustments point location diagram

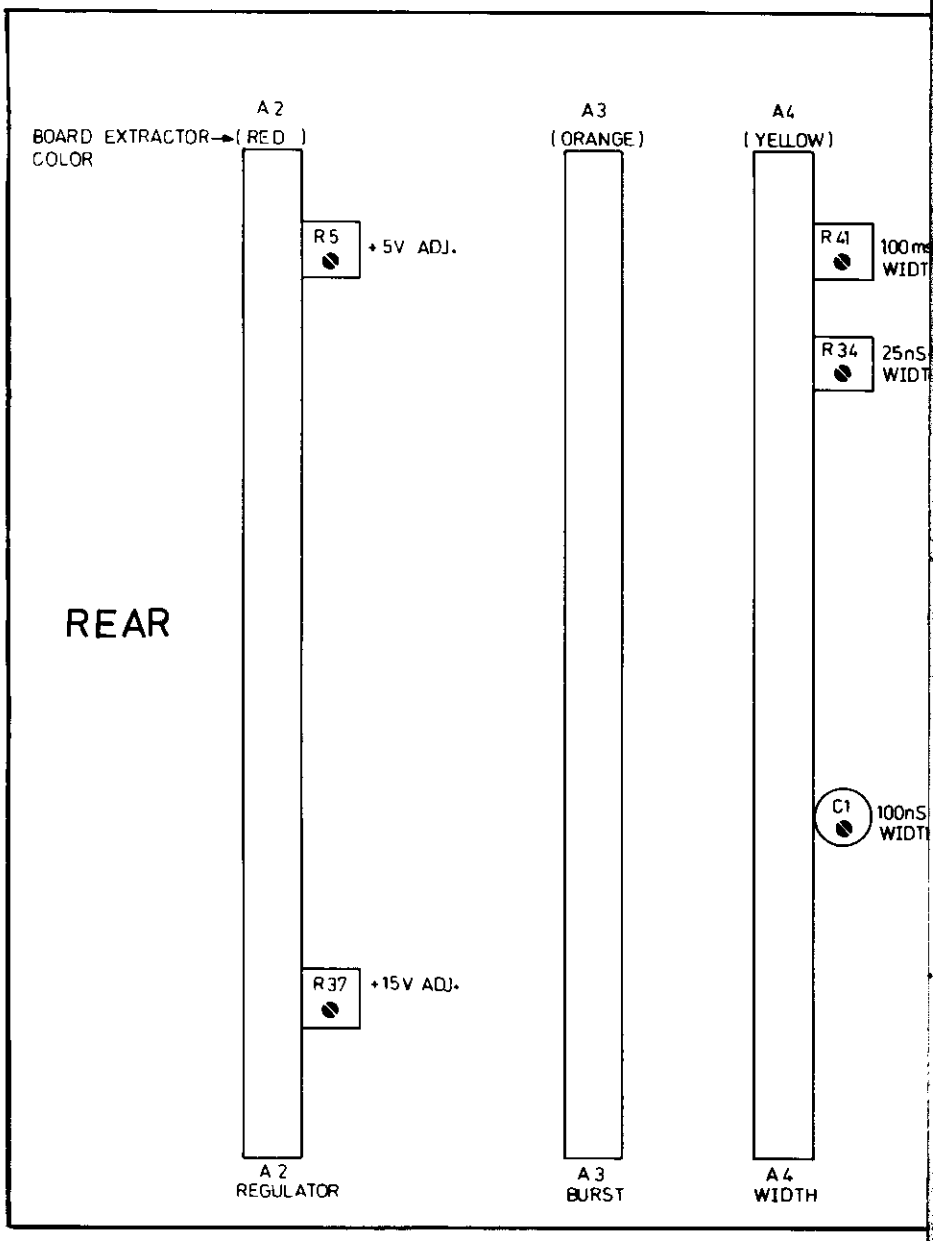
A 2
BOARD EXTRACTOR→(RED)
COLOR
A3
(ORANGE)
A4
(YELLOW)
R5
+ 5V ADJ.
R41
100ms
WIDT
R34
25nS
WIDT
REAR
C1
100nS
WIDT
R37
+15V ADJ.
A 2
REGULATOR
A 3
BURST
A 4
WIDTH

SECTION VI
REPLACEABLE PARTS

6–1 INTRODUCTION

6–2 This section contains information for ordering parts. Table 6–1 lists abbreviations used in the parts lists and elsewhere in the manual. Table 6–2 contains the names and addresses that correspond to the manufacturer code numbers. Table 6–3 lists all replaceable parts in reference designator order.

6–3 ABBREVIATIONS

6–4 Table 6–1 lists abbreviations used in the parts lists, schematics and elsewhere in the manual. In some cases two forms of the abbreviations are used, one all in capital letters, and one partial or no capitals. This occurs because the abbreviations in the parts lists are always all capitals. However, in the schematics and other parts of the manual, the same abbreviations may have upper and lower case letters.

6–5 REPLACEABLE PARTS

6–6 Table 6–3 is the list of replaceable parts and is organised as follows:

a. Mainframe (chassis) parts in alphanumerical order by reference designation.
b. Electrical assemblies and their components in alpha-numerical order by reference designation.

Reference designators are of the form A5R9 i.e. resistor 9 assembly 5. The blue pages at the end of this section list the parts required for Option 001.

6–7 The information given for each part consists of the following:

a. The Hewlett-Packard part number.
b. The description of the part.
c. Part number check digit (CD).

6–8 ORDERING INFORMATION

6–9 To order a part listed in the replaceable parts table, quote the Hewlett-Packard part number (with check digit), indicate the quantity required, and address the order to the nearest Hewlett-Packard office (list of Sales/Service offices at the rear of this manual). The check digit will ensure accurate and timely processing of your order.

6–10 To order a part that is not listed in the replaceable parts table, include the instrument model number, instrument serial number, the description and function of the part, and the number of parts required, address the order to the nearest Hewlett-Packard office.

6–11 DIRECT MAIL ORDER SYSTEM (USA)

6–12 Within the USA, Hewlett-Packard can supply parts through a direct mail order system. Advantages of using the system are as follows:

a. Direct ordering and shipment from the HP Parts Center in Mountain View, California.

b. No maximum or minimum on any mail order (there is a minimum order amount for parts ordered through a local HP office when the orders require billing and invoicing).

c. Prepaid transportation (there is a small handling charge for each order).

d. No invoices — to provide these advantages, a check or money order must accompany each order.

6–13 Mail order forms and specific ordering information is available through your local HP office. Addresses and phone numbers are located at the back of this manual.

Table 6–1. Abbreviations for Replaceable Parts List

REFERENCE DESIGNATIONS

A . . . . . assembly
AT . . . attenuator; isolator; termination
B . . . . . fan; motor
BT . . . . . battery
C . . . . . capacitor
CP . . . . . coupler
CR . . . . . diode; diode thyristor; varactor
DC . . . directional coupler
DL . . . . . delay line
DS . . . . . annunciator; signaling device (audible or visual); lamp; LED
E . . . . . miscellaneous electrical part
F . . . . . fuse
FL . . . . . filter
H . . . . . hardware
HY . . . . . circulator
J . . . . electrical connector (stationary portion); jack
K . . . . . relay
L . . . . . coil; inductor
M . . . . . meter
MP . . . . . miscellaneous mechanical part
P . . . . electrical connector (movable portion); plug
Q . . . . . transistor: SCR; triode thyristor
R . . . . . resistor
RT . . . . . thermistor
S . . . . . switch
T . . . . . transformer
TB . . . . . terminal board
TC . . . . . thermocouple
TP . . . . . test point
U . . . . . integrated circuit; microcircuit
V . . . . . electron tube
VR . . . . voltage regulator; breakdown diode
W . . . . cable; transmission path; wire
X . . . . . socket
Y . . . . crystal unit (piezoelectric or quartz)
Z . . . . tuned cavity; tuned circuit

ABBREVIATIONS

A . . . . . ampere
ac . . . . alternating current
ACCESS . . . . . accessory
ADJ . . . . . adjustment
A/D . . . . . analog-to-digital
AF . . . . . audio frequency
AFC . . . . . automatic frequency control
AGC . . . . . automatic gain control
AL . . . . . aluminum
ALC . . . . automatic level control
AM . . . amplitude modulation
AMPL . . . . . amplifier
APC . . . . automatic phase control
ASSY . . . . . assembly
AUX . . . . . auxiliary
avg . . . . . average
AWG . . . . . American wire gauge
BAL . . . . . balance
BCD . . . . . binary coded decimal
BD . . . . . board
BE CU . . . . . beryllium copper
BFO . . . . beat frequency oscillator
BH . . . . . binder head
BKDN . . . . . breakdown
BP . . . . . bandpass
BPF . . . . . bandpass filter
BRS . . . . . brass
BWO . . . . backward-wave oscillator
CAL . . . . . calibrate
ccw . . . . counter-clockwise
CER . . . . . ceramic
CHAN . . . . . channel
cm . . . . . centimeter
CMO . . cabinet mount only
COAX . . . . . coaxial
COEF . . . . . coefficient
COM . . . . . common
COMP . . . . . composition
COMPL . . . . . complete
CONN . . . . . connector
CP . . . . . cadmium plate
CRT . . . cathode-ray tube
CTL . . . . complementary transistor logic
CW . . . . continuous wave
cw . . . . . clockwise
cm . . . . . centimeter
D/A . . . . . digital-to-analog
dB . . . . . decibel
dBm . . . . decibel referred to 1 mW
dc . . . . . direct current
deg . . degree (temperature interval or difference)
. .° . . . degree (plane angle)
°C . . . . . degree Celsius (centigrade)
°F . . . . degree Fahrenheit
°K . . . . . degree Kelvin
DEPC . . deposited carbon
DET . . . . . detector
diam . . . . . diameter
DIA . . . diameter (used in parts list)
DIFF AMPL . . . differential amplifier
div . . . . . division
DPDT . . . . . double-pole, double-throw
DR . . . . . drive
DSB . . . . double sideband
DTL . . . . diode transistor logic
DVM . . . . digital voltmeter
FCL . . . . emitter coupled logic
EMF . . electromotive force
EDP . . . . . electronic data processing
ELECT . . . . . electrolytic
ENCAP . . . . . encapsulated
EXT . . . . . external
F . . . . . farad
FET . . . . . field-effect transistor
F/F . . . . . flip-flop
FH . . . . . flatt head
FIL H . . . . . fillister head
FM . frequency modulation
FP . . . . . front panel
FREQ . . . . . frequency
FXD . . . . . fixed
g . . . . . gram
GE . . . . . germanium
GHz . . . . . gigahertz
GL . . . . . glass
GRD . . . . . ground(ed)
H . . . . . henry
h . . . . . hour
HET . . . . . heterodyne
HEX . . . . . hexagonal
HD . . . . . head
HDW . . . . . hardware
HF . . . . . high frequency
HG . . . . . mercury
HI . . . . . high
HP . . . . . Hewlett-Packard
HPF . . . . . high pass filter
HR . . . . . hour (used in parts list)
HV . . . . . high voltage
Hz . . . . . Hertz
IC . . . . . integrated circuit
ID . . . . . inside diameter
IF . . . . . intermediate frequency
IMPG . . . . . impregnated
in . . . . . inch
INCD . . . . . incandescent
INCL . . . . . include(s)
INP . . . . . input
INS . . . . . insulation
INT . . . . . internal
kg . . . . . kilogram
kHz . . . . . kilohertz
kΩ . . . . . kilohm
kV . . . . . kilovolt
lb . . . . . pound
LC . . . . . inductance-capacitance
LED . . light-emitting diode
LF . . . . . low frequency
LG . . . . . long
LH . . . . . left hand
LIM . . . . . limit
LIN . . . . linear taper (used in parts list)
lin . . . . . linear
LK WASH . . . lock washer
LO . . . low; local oscillator
LOG . . . logarithmic taper (used in parts list)
log . . . . . logarithm(ic)
LPF . . . . . low pass filter
LV . . . . . low voltage
m . . . . . meter (distance)
mA . . . . . milliampere
MAX . . . . . maximum
MΩ . . . . . megohm
MEG . . . . meg (10^6) (used in parts list)
MET FLM . . . . metal film
MET OX . . . metallic oxide
MF . . . medium frequency; microfarad (used in parts list)
MFR . . . . . manufacturer
mg . . . . . milligram
MHz . . . . . megahertz
mH . . . . . millihenry
mho . . . . . mho
MIN . . . . . minimum
min . . . . . minute (time)
. . . . . minute (plane angle)
MINAT . . . . . miniature
mm . . . . . millimeter
MOD . . . . . modulator
MOM . . . . . momentary
MOS . . . . . metal-oxide semiconductor
ms . . . . . millisecond
MTG . . . . . mounting
MTR . . . meter (indicating device)
mV . . . . . millivolt
mVac . . . . . millivolt, ac
mVdc . . . . . millivolt, dc
mVpk . . . . millivolt, peak
mVp-p . . . millivolt, peak-to-peak
mVrms . . . . millivolt, rms
mW . . . . . milliwatt
MUX . . . . . multiplex
MY . . . . . mylar
μA . . . . . microampere
μF . . . . . microfarad
μH . . . . . microhenry
μmho . . . . . micromho
μs . . . . . microsecond
μV . . . . . microvolt
μVac . . . . . microvolt, ac
μVdc . . . . . microvolt, dc
μVp-p . . . microvolt, peak-to-peak
μVrms . . . . microvolt, rms
μW . . . . . microwatt
nA . . . . . nanoampere
NC . . . . . no connection
N/C . . . . . normally closed
NE . . . . . neon
NEG . . . . . negative
nF . . . . . nanofarad
NI PL . . . . . nickel plate
N/O . . . . . normally open
NOM . . . . . nominal

NOTE

All abbreviations in the parts list will be in upper-case.

Table 6–1. Abbreviations for Replaceable Parts List (cont'd)

NORM . . . . . normal
NPN . . . negative-positive-negative
NPO . . . . negative-positive zero (zero temperature coefficient)
NRFR . . not recommended for field replacement
NSR . . . . . not separately replaceable
ns . . . . . nanosecond
nW . . . . . nanowatt
OBD . order by description
OD . . . . outside diameter
OH . . . . . oval head
OP AMPL . . . . operational amplifier
OPT . . . . . option
OSC . . . . . oscillator
OX . . . . . oxide
oz . . . . . ounce
Ω . . . . . ohm
P . . . . peak (used in parts list)
PAM . . . . pulse-amplitude modulation
PC . . . . . printed circuit
PCM . . pulse-code modulation; pulse-count modulation
PDM . . . . . pulse-duration modulation
pF . . . . . picofarad
PH BRZ . phosphor bronze
PHL . . . . . Phillips
PIN . . . . positive-intrinsic-negative
PIV . . . . . peak inverse voltage
pk . . . . . peak
PL . . . . . phase lock
PLO . . . . . phase lock oscillator
PM . . . . phase modulation
PNP . . . . positive-negative-positive
P/O . . . . . part of
POLY . . . . . polystyrene
PORC . . . . . porcelain
POS . . positive; position(s) (used in parts list)
POSN . . . . . position
POT . . . . . potentiometer
p-p . . . . . peak-to-peak
PP . . . peak-to-peak (used in parts list)
PPM . . . . . pulse-position modulation
PREAMPL . . . preamplifier
PRF . . . . . pulse-repetition frequency
PRR . . . . pulse repetition rate
ps . . . . . picosecond
PT . . . . . point
PTM . . . . . pulse-time modulation
PWM . . . . . pulse-width modulation
PWV . . . . . peak working voltage
RC . resistance-capacitance
RECT . . . . . rectifier
REF . . . . . reference
REG . . . . . regulated
REPL . . . . . replaceable
RF . . . . . radio frequency
RFI . . . . . radio frequency interference
RH . . . . round head; right hand
RLC . . . . . resistance-inductance-capacitance
RMO . . . rack mount only
rms . . . . root-mean-square
RND . . . . . round
ROM . . read-only memory
R&P . . . . . rack and panel
RWV . . . . reverse working voltage
S . . . scattering parameter
s . . . . . second (time)
" . . second (plane angle)
S-B . . . . . slow-blow (fuse) (used in parts list)
SCR . . . silicon controlled rectifier; screw
SE . . . . . selenium
SECT . . . . . sections
SEMICON . . . . . semiconductor
SHF . . . . . superhigh frequency
SI . . . . . silicon
SIL . . . . . silver
SL . . . . . slide
SNR . . signal-to-noise ratio
SPDT . . . . . single-pole, double-throw
SPG . . . . . spring
SR . . . . . split ring
SPST . . . . . single-pole, single-throw
SSB . . . . single sideband
SST . . . . . stainless steel
STL . . . . . steel
SQ . . . . . square
SWR . . standing-wave ratio
SYNC . . . . . synchronize
T . . timed (slow-blow fuse)
TA . . . . . tantalum
TC . . . . . temperature compensating
TD . . . . . time delay
TERM . . . . . terminal
TFT . . thin-film transistor
TGL . . . . . toggle
THD . . . . . thread
THRU . . . . . through
TI . . . . . titanium
TOL . . . . . tolerance
TRIM . . . . . trimmer
TSTR . . . . . transistor
TTL . . transistor-transistor logic
TV . . . . . television
TVI . television interference
TWT . . traveling wave tube
U . . . . . micro (10^6) (used in parts list)
UF . . . microfarad (used in parts list)
UHF . . ultrahigh frequency
UNREG . . . . unregulated
V . . . . . volt
VA . . . . . voltampere
Vac . . . . . volts, ac
VAR . . . . . variable
VCO . . . voltage controlled oscillator
Vdc . . . . . volts, dc
VDCW . . volts, dc, working (used in parts list)
V(F) . . . . . volts, filtered
VFO . . variable-frequency oscillator
VHF . . . . . very-high frequency
Vpk . . . . . volts, peak
Vp-p . . volts, peak-to-peak
Vrms . . . . . volts, rms
VSWR . . . voltage standing wave ratio
VTO . . . . . voltage-tuned oscillator
VTVM . . . . Vacuum-tube voltmeter
V(X) . . . . volts, switched
W . . . . . watt
W . . . . . with
WIV . . . . working inverse voltage
WW . . . . . wirewound
W/O . . . . . without
YIG . . yttrium-iron-garnet
Z_0 . . . . . characteristic impedance

MULTIPLIERS

Abbreviation	Prefix	Multiple
T	tera	10^{12}
G	giga	10^{9}
M	mega	10^{6}
k	kilo	10^{3}
da	deka	10
d	deci	10^{-1}
c	centi	10^{-2}
m	milli	10^{-3}
μ	micro	10^{-6}
n	nano	10^{-9}
p	pico	10^{-12}
f	femto	10^{-15}
a	atto	10^{-18}

NOTE

All abbreviations in the parts list will be in upper-case.

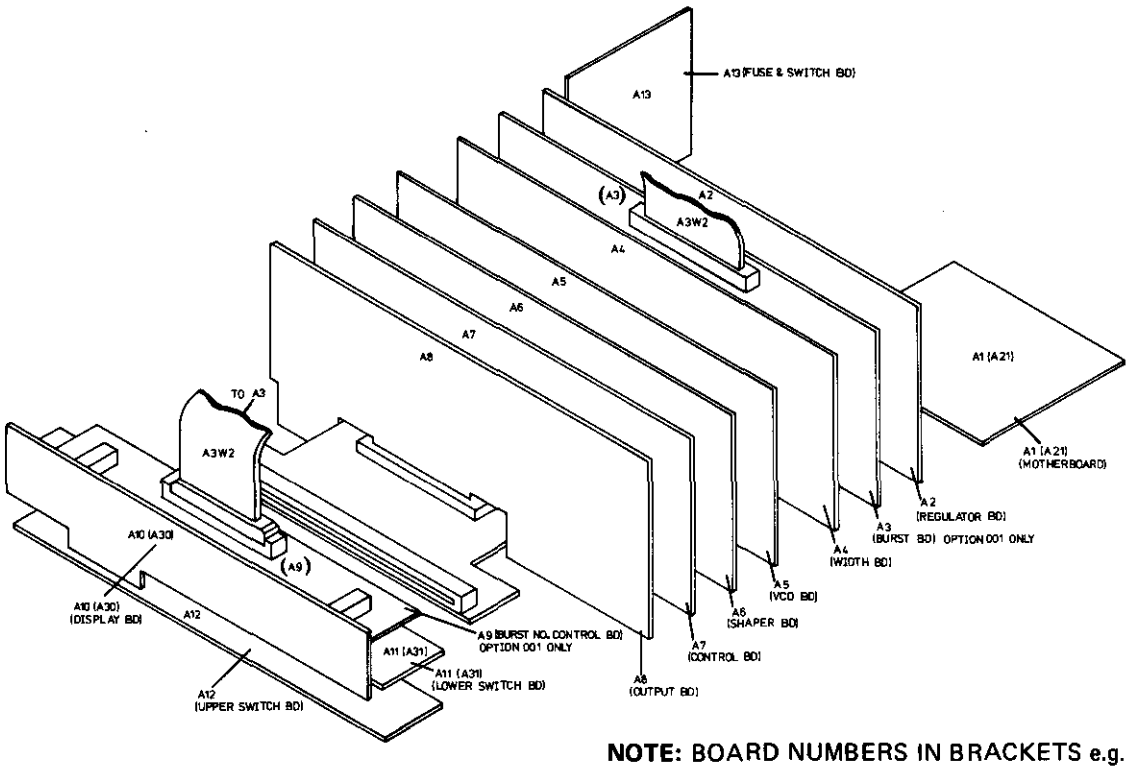

NOTE: BOARD NUMBERS IN BRACKETS e.g. (A30) ARE APPLICABLE TO OPTION 001 ONLY.
A10 & A11 (A30 & A31) ARE SUB-ASSEMBLIES OF A40 & A41 RESPECTIVELY.

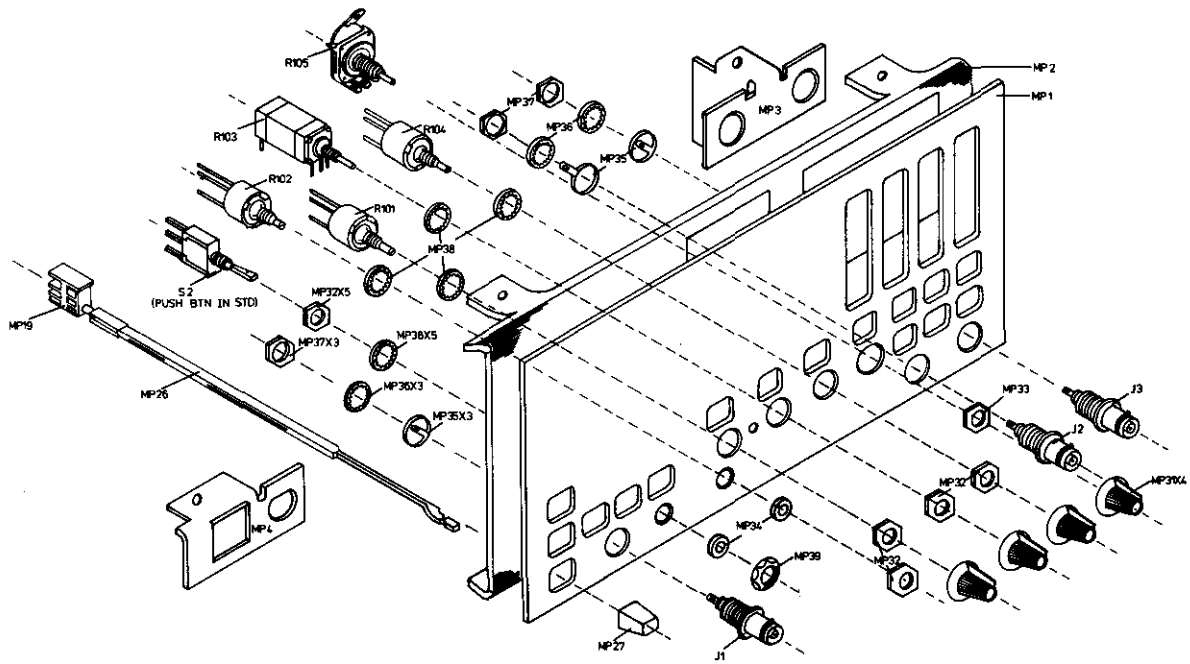

NOTE: DETAILS ON REMOVAL OF THE COMPLETE FRONT PANEL ASSEMBLY ARE GIVEN IN SERVICE BLOCK 3 (DISPLAY).

Figure 6–1. Frame Parts and Board Identification Diagram
(Instrument shown with Option 001 fitted)

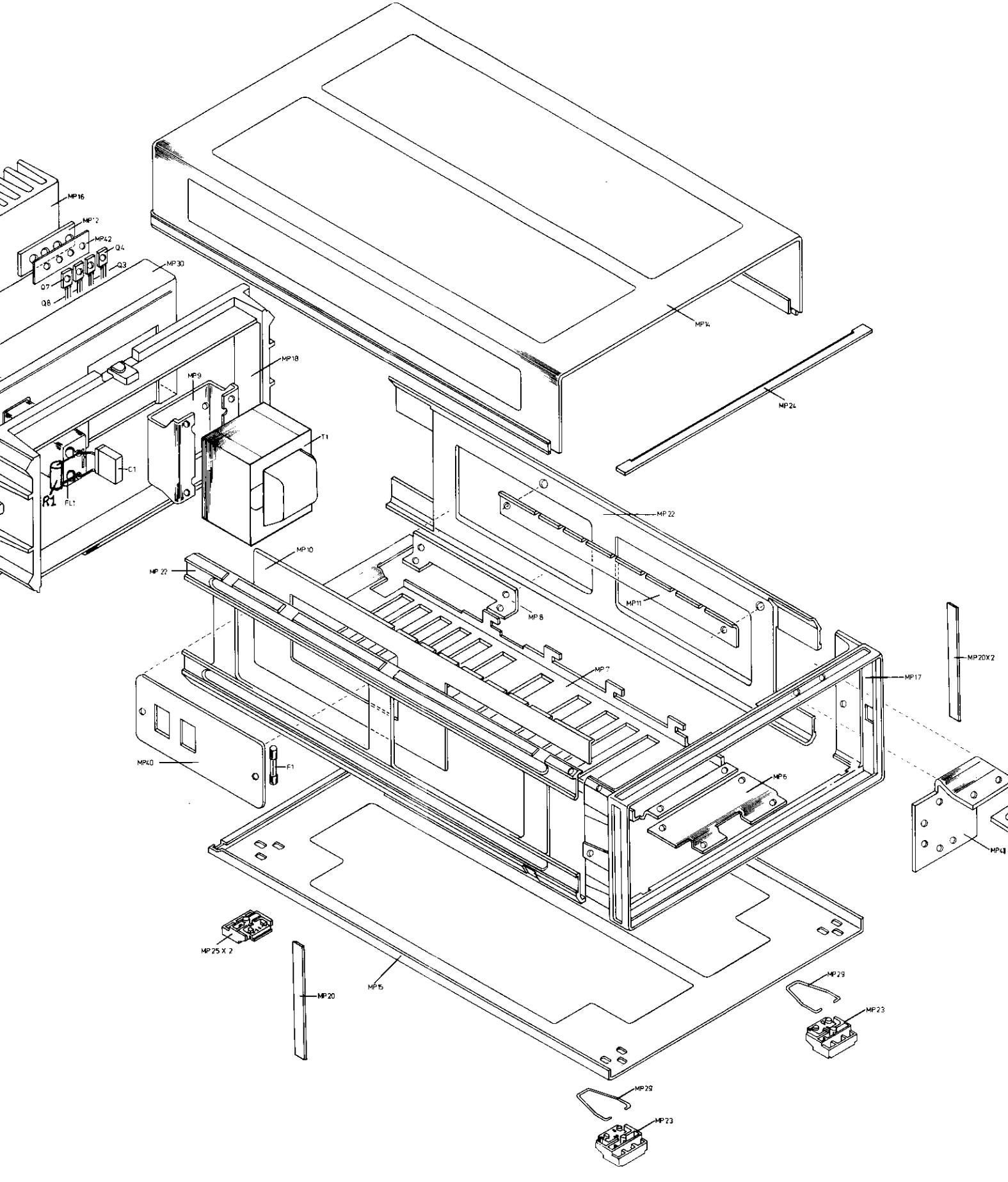
MP16
MP42
Q4
Q3
MP30
Q7
Q8
MP14
MP18
MP9
MP24
T1
C1
R1
FL1
MP22
MP10
MP22
MP11
MP8
MP20X2
MP7
MP17
MP40
F1
MP6
MP41
MP25 X 2
MP15
MP20
MP29
MP23
MP29
MP23

Table 6–3. Replaceable Parts

REFERENCE DESIGNATOR	CD	H-P PART NUMBER	DESCRIPTION
FRAME			
A1	0	08111-66501	BD AY-MOTHER
A2	1	08111-66502	BD AY-REGULATOR
A4	3	08111-66504	BD AY-WIDTH GEN
A5	4	08111-66505	BD AY VCO
A6	5	08111-66506	BD AY SHAPER
A7	6	08111-66507	BD AY-CONTROL
A8	7	08111-66508	BD AY-OUTPUT
A10 } SEE NOTE	1	08111-66510	BD AY-DISPLAY
A11 } SEE NOTE	2	08111-66511	BD AY-SWITCH UPR
A12	3	08111-66512	BD AY-SWITCH LOW
A13	4	08111-66513	BD AY-SW & FUSE
C1	8	0160-4323	C-F 0.047UF 20%
F1	1	2110-0202	FUSE .5A 250V
F2	0	2110-0201	FUSE 250V.25A SB
J1	3	1250-0118	CONN BNC BLKHD
J2	3	1250-0118	CONN BNC BLKHD
J3	3	1250-0118	CONN BNC BLKHD
L1	5	9170-0013	CORE FERRA .375
L2	5	9170-0013	CORE FERRA .375
L3	5	9170-0013	CORE FERRA .375
MP1	1	4040-1968	PANEL FRONT
MP2	9	08111-00201	PANEL SUB
MP3	8	08111-01208	BRACKET-SUB-PNL
MP4	9	08111-01209	BRACKET-SUB PNL
MP6	1	08111-01201	BRKT-FRONT
MP7	2	08111-01202	BRKT-BOTTOM
MP8	4	08111-01204	BRKT-POWER
MP9	5	08111-01205	BRKT-XFMR
MP10	6	08111-01206	BRKT-SIDE LEFT
MP11	7	08111-01207	BRKT-SIDE RIGHT
MP12	5	08111-02302	HT-SNK-XSTR
MP13	8	08111-02305	HT-SNK OUT HLDR
MP14	6	08111-04101	COVER TOP
MP15	7	08111-04102	COVER BOTTOM
MP16	2	08111-21101	HEATSINK REAR
MP17	8	5020-8813	FRAME FRONT
MP18	9	08116-21103	FRM REAR(MODIFY)
MP19	5	5040-1135	COUPLER PWR SW
MP20	7	5001-0438	TRIM STRIP
MP22	9	5020-8830	SIDE STRUTS
MP23	8	5040-7201	FOOT
MP24	0	5040-7203	TRIM STRIP
MP25	3	5040-7222	RR FEET NON-SKID
MP26	3	5040-9301	PUSH ROD-SW
MP27	9	5040-9323	KEY CAP QUARTER
MP28	7	8120-1689	GERMAN PWR CORD
MP29	5	1460-1345	TILT STAND
MP30	0	08111-00202	PANEL REAR
MP31	2	0370-1005	KNOB BASE PTR
MP32	3	2950-0072	NUT HEX .25-32
MP33	7	0535-0036	NUT HEX M7X0.75
MP34	8	08111-22501	RING
MP35	5	0360-1190	TERM-LUG SLDR
MP36	3	2190-0016	WASH-LOCK INT3/8
MP37	8	2950-0043	NUT-HEX .375-32
MP38	4	2190-0067	WASH-LOCK .408ID
MP39	1	0590-0836	NUT 1/4-40
MP40	8	08111-00606	SHIELD FUSE
MP42	3	0340-1041	INSULATOR
MP43	8	3101-0851	CAP PUSH BUTTON
Q3	6	1853-0212	XSTR 2N5194 SI
Q4	5	1854-0368	XSTR 2N5191
Q7	6	1853-0212	XSTR 2N5194 SI
Q8	5	1854-0368	XSTR 2N5191
R1	4	0698-8827	R-F 1M 1% .125W
R101	0	2100-3959	R-VAR 5K 20%
R102	3	2100-3960	R-VAR 5K 20%
R103	8	2100-3981	R-VAR 10K 10%
R104	9	2100-3958	R-VAR 1K 20%
R105	2	2100-3977	R-VAR 10K 20%
S2	6	3101-1261	SW PBTN SPDT
T1	6	08111-61101	XFMR-PWR
W1	1	08111-61601	CBL AY SIG OUT
W2	2	08111-61602	CBL AY TRIG OUT

NOTE: A10 & A11 ARE SUB-ASSEMBLIES OF A40 (08111-66540) AND ARE NOT SEPARATELY AVAILABLE.

Dedication -4111 1984 / neue Farbe -4121 1987

Table 6–3. Replaceable Parts (cont'd)

REFERENCE DESIGNATOR		C D	H-P PART NUMBER	DESCRIPTION
A1			08111-66501	BD AY-MOTHER
A1	C1		0180-3158	C-F ELCO 6800UF
A1	C2		0180-3162	C-F ELCO 4700UF
A1	C3		0180-3161	C-F ELCO 3300VF
A1	C4		0180-3161	C-F ELCO 3300VF
A1	CR1	3	1901-0638	DIO AY-SI 100V
A1	CR2	7	1906-0096	DIO-FULL WAVE BR
A1	J1	7	1251-3825	CONNECTOR, 5 PIN
A1	J2	8	1251-2026	CONN PC 36CONT R
A1	J4	8	1251-2026	CONN PC 36CONT R
A1	J5	8	1251-2026	CONN PC 36CONT R
A1	J6	8	1251-2026	CONN PC 36CONT R
A1	J7	8	1251-2026	CONN PC 36CONT R
A1	J8	8	1251-2026	CONN PC 36CONT R
A1	J12		1251-7456	CONN 25 CONT
A1	R12	1	0757-0197	R-F 1.5K1% .5W
A1	R13	1	0757-0197	R-F 1.5K1% .5W
A1	R20	6	0812-0045	R-F .15 5% 3W
A1	R21	6	0812-0045	R-F .15 5% 3W
A1	R25	9	0757-0731	R-F 825 1% .25W
A1	R28	9	0757-0731	R-F 825 1% .25W
A1	R31	4	0811-2455	R-F 2 1% 3W
A1	R32	4	0811-2455	R-F 2 1% 3W
A1	R39	3	0757-0280	R-F 1K1% .125W F
A1	R40	3	0757-0280	R-F 1K1% .125W F
A1	R41	3	0757-0280	R-F 1K1% .125W F
A1	R42	3	0757-0280	R-F 1K1% .125W F
A2			08111-66502	BD AY-REGULATOR
A2	C5	6	0180-0228	C-F 22UF 15V
A2	C6	1	0160-3724	C-F .47UF 40V
A2	C7		0180-3163	C-F 220UF 10V AL
A2	C9	8	0160-4365	C-F 470PF 5%
A2	C11	3	0160-2306	CAP 27PF 5% 300V
A2	C12	5	0180-2207	C-F 100UF 10V
A2	C14	0	0140-0193	C-F 82PF 300V
A2	C15		0180-3156	C-F ELCO 47UF63V
A2	C17	3	0140-0196	C-F 150PF 300V
A2	C18		0180-3156	C-F ELCO 47UF63V
A2	C20	3	0180-0291	C-F 1UF 35V
A2	CR3	1	1901-1098	DIO-SWIT.1N4150
A2	CR4	1	1901-1098	DIO-SWIT.1N4150
A2	CR5	1	1901-1098	DIO-SWIT.1N4150
A2	CR6	1	1901-1098	DIO-SWIT.1N4150
A2	CR7	1	1901-1098	DIO-SWIT.1N4150
A2	CR8	1	1901-1098	DIO-SWIT.1N4150
A2	CR9	1	1901-1098	DIO-SWIT.1N4150
A2	CR10	1	1901-1098	DIO-SWIT.1N4150
A2	CR11	1	1901-1098	DIO-SWIT.1N4150
A2	CR12	1	1901-1098	DIO-SWIT.1N4150
A2	CR13	1	1901-1098	DIO-SWIT.1N4150
A2	CR14	1	1901-1098	DIO-SWIT.1N4150
A2	MP1	3	4040-0748	PC EXTR BD BLK
A2	MP2	7	4040-0750	PC EXTR BD RED
A2	MP3		1205-0295	HEAT-SINK
A2	MP4		1205-0295	HEAT-SINK
A2	Q1	2	1853-0036	XSTR SI 2N3906
A2	Q2	2	1853-0036	XSTR SI 2N3906
A2	Q5	1	1854-0215	XSTR SI 2N3904
A2	Q6	2	1853-0036	XSTR SI 2N3906
A2	Q9	1	1854-0637	XSTR SI 2219A
A2	Q10	9	1853-0314	XSTR 2N2905A PNP
A2	R1	5	0757-0349	R-F 22.6K1%
A2	R2	0	0698-4483	R-F 18.7K1%
A2	R3	9	0698-4458	R-F 590 1% .125W
A2	R4	2	0698-3495	R-F 866 1% .125W
A2	R5	2	2100-3349	R-VAR 100 -+10%
A2	R6	2	0698-4401	R-F 95.3 1%
A2	R7	5	0698-3456	R-F 287K1% .125W
A2	R8	7	0757-0200	R-F 5.62K1%
A2	R9	6	0698-4520	R-F 143K1% .125W
A2	R10	2	0757-0453	R-F 30.1K1%.125W
A2	R14	8	0757-0178	R-F 100 1% .25W
A2	R15	8	0757-0178	R-F 100 1% .25W
A2	R16	2	0757-0411	R-F 332 1% .125W
A2	R17	6	0698-3499	R-F 40.2K1%
A2	R18	6	0698-3499	R-F 40.2K1%
A2	R19		0698-4421	R-F 249 1% .125W
A2	R22	9	0698-3153	R-F 3.83K1%
A2	R23	4	0698-4502	R-F 64.9K1%
A2	R24	2	0698-6887	R-F 20.8K 5%
A2	R26	0	0757-0401	R-F 100 1% .125W
A2	R27	0	0757-0401	R-F 100 1% .125W
A2	R29	7	0698-8961	R-F 909K 1% .125
A2	R30	6	0698-8704	R-F 665K
A2	R33	7	0698-4521	R-F 154K1% .125W
A2	R34	9	0698-8038	R-F 5.9K K%
A2	R35	2	0698-3247	R-F 4.53K.25%
A2	R36	0	0757-0401	R-F 100 1% .125W
A2	R37	5	2100-3350	R-VAR 200 10%
A2	R38	3	0757-0280	R-F 1K1% .125W F
A2	R40		1810-0567	R-NETWORK 8X20K
A2	R41	3	1810-0037	R-NETWORK DIP
A2	U1	7	1826-0161	IC-LM 324N
A2	U2	7	1826-0161	IC-LM 324N
A2	U3	9	1826-0147	IC V RGLTR
A2	U4	6	1826-0277	IC LM 320 V RGLT
A2	VR1	7	1902-0680	DIO 6.2V 5% .25W
A2	VR2	8	1902-0962	DIODE,ZENER
A2	VR3	8	1902-0962	DIODE,ZENER
A4			08111-66504	BD AY-WIDTH GEN
A4	C1	6	0121-0165	C-VAR 7-25PF
A4	C2	3	0160-3875	C-F 22PF 5% 200V
A4	C3	2	0160-2454	C-F 620PF 300V
A4	C4	7	0160-4348	C-F 6800PF 100V
A4	C5	9	0160-4580	C-F .068UF 1%
A4	C6	4	0160-4577	C-F .68UF 1% 40V
A4	C7	2	0160-4575	C-F 6.8UF 2% 40V
A4	C8	9	0160-0174	C-F .47UF 25VCER
A4	C9	9	0160-0174	C-F .47UF 25VCER
A4	C10	3	0160-4386	C-F 33PF 5% 200V

Table 6–3. Replaceable Parts (cont'd)

REFERENCE DESIGNATOR		C D	H-P PART NUMBER	DESCRIPTION
A4	C11	7	0160-3879	C-F .01UF 100V
A4	C12	9	0160-0174	C-F .47UF 25VCER
A4	C13	5	0160-0576	C-F .1UF 20% CER
A4	C14	1	0180-0116	C-F 6.8UF 35V TA
A4	C15	7	0160-3879	C-F .01UF 100V
A4	C16	5	0160-0576	C-F .1UF 20% CER
A4	C17	3	0180-0291	C-F 1UF 35V
A4	C18	4	0160-4527	C-F 56PF 5% 200V
A4	C19	5	0160-0576	C-F .1UF 20% CER
A4	C21	5	0160-0576	C-F .1UF 20% CER
A4	C22	5	0160-0576	C-F .1UF 20% CER
A4	CR2	8	1901-0047	DIO SI 20V 10NS
A4	CR3	1	1901-1098	DIO-SWIT.1N4150
A4	CR4	1	1901-1098	DIO-SWIT.1N4150
A4	CR5	1	1901-1098	DIO-SWIT.1N4150
A4	CR8	1	1901-1098	DIO-SWIT.1N4150
A4	CR9	1	1901-1098	DIO-SWIT.1N4150
A4	CR10	1	1901-1098	DIO-SWIT.1N4150
A4	CR11	1	1901-1098	DIO-SWIT.1N4150
A4	CR12	7	1901-0179	DIO SI 15V .75NS
A4	L1	0	9100-2251	COIL-CHOKE .22UH
A4	MP1	3	4040-0748	PC EXTR BD BLK
A4	MP2	9	4040-0752	PC EXTR BD YEL
A4	Q1	2	1854-0795	XSTR MPS-H10
A4	Q2	2	1854-0795	XSTR MPS-H10
A4	Q3	2	1854-0795	XSTR MPS-H10
A4	Q4	2	1853-0036	XSTR SI 2N3906
A4	Q5	2	1853-0036	XSTR SI 2N3906
A4	Q6	2	1853-0036	XSTR SI 2N3906
A4	Q7	2	1853-0036	XSTR SI 2N3906
A4	Q8	2	1853-0036	XSTR SI 2N3906
A4	Q9	2	1853-0036	XSTR SI 2N3906
A4	Q10	7	1853-0354	XSTR MPS H81
A4	Q11	7	1853-0354	XSTR MPS H81
A4	Q14	2	1853-0036	XSTR SI 2N3906
A4	Q15	7	1853-0354	XSTR MPS H81
A4	R1	6	0757-0407	R-F 200 1% .125W
A4	R2	9	0698-3442	R-F 237 1% .125W
A4	R3	8	0757-0417	R-F 562 1% .125W
A4	R4	2	0698-3437	R-F 133 1% .125W
A4	R5	9	0757-0278	R-F 1.78K1%
A4	R6	8	0757-0433	R-F 3.32K1%
A4	R7	0	0698-4425	R-F 1.54K1%
A4	R8	0	0698-4037	R-F 46.4 1%
A4	R9	7	0698-3432	R-F 26.1 1%
A4	R10	6	0698-3431	R-F 23.7 1%
A4	R11	2	0698-3495	R-F 866 1% .125W
A4	R12	6	0698-3150	R-F 2.37K1%
A4	R13	0	0698-3443	R-F 287 1% .125W
A4	R14	3	0698-4379	R-F 44.2 1%
A4	R15	5	0699-0070	R-F 3.16M 1%
A4	R16	5	0699-0070	R-F 3.16M 1%
A4	R17	5	0699-0070	R-F 3.16M 1%
A4	R18	5	0699-0070	R-F 3.16M 1%
A4	R19	5	0699-0070	R-F 3.16M 1%
A4	R20		1810-0337	R-NETWORK 8X4.7K
A4	R21	4	0757-0398	R-F 75 1% .125W
A4	R22	6	0698-3431	R-F 23.7 1%
A4	R25	0	0757-0394	R-F 51.1 1%
A4	R26	2	0698-3437	R-F 133 1% .125W
A4	R27	1	1810-0275	R-NETW 9X1KOHM
A4	R31	5	0698-4123	R-F 499 1% .125W
A4	R32	0	0757-0401	R-F 100 1% .125W
A4	R33	5	0757-0290	R-F 6.19K1%
A4	R34	5	2100-3350	R-VAR 200 10%
A4	R35	9	0757-0418	R-F 619 1% .125W
A4	R36	9	0757-0442	R-F 10K1% .125W
A4	R37	9	0757-0442	R-F 10K1% .125W
A4	R39	3	0698-4428	R-F 1.69K1%
A4	R40	0	0698-4433	R-F 2.26K1%
A4	R41	1	2100-3273	R-VAR 2K 10%
A4	R42	5	0757-0274	R-F 1.21K1%
A4	R43	0	0698-3245	R-F 20.5K1%
A4	R44	3	0757-0438	R-F 5.11K1%
A4	R45	9	0698-0084	R-F 2,15K 1%.125
A4	R47	9	0757-0442	R-F 10K1% .125W
A4	R55	7	0698-3432	R-F 26.1 1%
A4	R57	3	0698-4014	R-F 787 1% .125W
A4	R60	9	0757-0442	R-F 10K1% .125W
A4	R62	6	0757-0465	R-F 100K1% .125W
A4	R63	4	0757-0405	RES 162 1%.125W
A4	U1	7	1826-0111	IC-DUAL OP AMPL
A4	U2	7	1826-0111	IC-DUAL OP AMPL
A4	U3	7	1826-0161	IC-LM 324N
A4	U4	7	1826-0161	IC-LM 324N
A4	U5	3	1820-1216	IC-SN74LS138
A4	U6	1	1820-0802	IC-ECL 10102
A4	U7	8	1820-0817	IC DGTL MC 10131
A4	U8	3	1826-0026	IC-DGTL LM311H
A4	VR1	6	1902-0944	DIODE-ZENER
A4	VR2	2	1902-0958	DIO ZNR 10V 5%
A5			08111-66505	BD AY VCO
A5	C1	0	0160-4383	C-F 6.8PF 200V
A5	C2	8	0160-4521	C-F 12PF 5% 200V
A5	C3	6	0121-0165	C-VAR 7-25PF
A5	C4	1	0160-4318	C-F 330PF 1%
A5	C5	9	0160-2675	C-F 3900PF 300V
A5	C6		0160-5423	C-F .039UF 2%
A5	C7		0160-5425	C-F .39UF 2% 40V
A5	C8		0160-5460	C-F 3.9UF 63VDC
A5	C10	9	0180-0354	C-F 40UF 10V
A5	C11	2	0160-4492	C-F 18PF 200Y
A5	C13	4	0160-0575	C-F .047UF CER
A5	C14	9	0160-0174	C-F .47UF 25VCER
A5	C15	1	0160-0572	C-F 2200PF CER
A5	C16	7	0160-3879	C-F .01UF 100V
A5	C17	4	0160-0575	C-F .047UF CER
A5	C18	9	0160-0174	C-F .47UF 25VCER
A5	C20	5	0160-0576	C-F .1UF 20% CER
A5	C21	1	0160-3097	C-F .47UF CER
A5	C22	7	0160-3879	C-F .01UF 100V
A5	C24	7	0160-3879	C-F .01UF 100V
A5	CR1	1	1901-1098	DIO-SWIT.1N4150
A5	CR2	1	1901-1098	DIO-SWIT.1N4150
A5	CR3	1	1901-1098	DIO-SWIT.1N4150
A5	CR4	1	1901-1098	DIO-SWIT.1N4150
A5	CR5	1	1901-1098	DIO-SWIT.1N4150
A5	CR6	8	1901-0047	DIO SI 20V 10NS
A5	L1	9	9100-2250	COIL-CHOKE .18UH
A5	MP1	3	4040-0748	PC EXTR BD BLK

Table 6–3. Replaceable Parts (cont'd)

REFERENCE DESIGNATOR		CD	H-P PART NUMBER	DESCRIPTION
A5	MP2	0	4040-0753	PC EXTR BD GRN
A5	Q1	5	1854-0392	XSTR ST 2N 5088
A5	Q2	2	1853-0086	XSTR SI 2N5087
A5	Q3	2	1853-0086	XSTR SI 2N5087
A5	Q4	2	1853-0086	XSTR SI 2N5087
A5	Q5	2	1853-0086	XSTR SI 2N5087
A5	Q6	7	1853-0354	XSTR MPS H81
A5	Q7	7	1853-0354	XSTR MPS H81
A5	Q8	1	1854-0215	XSTR SI 2N3904
A5	Q9	1	1854-0215	XSTR SI 2N3904
A5	Q10	1	1854-0215	XSTR SI 2N3904
A5	Q11	1	1854-0215	XSTR SI 2N3904
A5	Q12	1	1854-0215	XSTR SI 2N3904
A5	Q13	1	1854-0215	XSTR SI 2N3904
A5	R1	5	0698-7226	R-F 383 1% .05W
A5	R2	4	0698-4453	R-F 402 1% .125W
A5	R3	0	0757-0401	R-F 100 1% .125W
A5	R4	8	0757-0384	R-F 20 1% .125W
A5	R5	7	2100-3352	R-VAR 1K .5W
A5	R6	1	0757-0428	RES 1.62K 1%.125
A5	R7	1	0757-0428	RES 1.62K 1%.125
A5	R8	7	2100-3352	R-VAR 1K .5W
A5	R9	2	0698-4427	R-F 1.55K1%
A5	R10	6	2100-3351	RES TRMR 500 10%
A5	R11	4	0698-3439	RES 178 1% .125W
A5	R13	2	0757-0453	R-F 30.1K1%.125W
A5	R14	6	0757-0449	R-F 20K1% .125W
A5	R15	7	0757-0200	R-F 5.62K1%
A5	R16	8	0698-3558	R-F 4.02K1%
A5	R20	7	0698-7236	R-F 1K 1% .05W
A5	R21	1	0698-3452	R-F 147K1% .125W
A5	R22	4	0757-0447	R-F 16.2K 1%.125
A5	R23	6	0698-3499	R-F 40.2K1%
A5	R24	2	0698-3271	R-F 115K1% .125W
A5	R26	5	0698-3498	R-F 8.66K1%
A5	R27	5	0698-3498	R-F 8.66K1%
A5	R28	3	0698-4501	R-F 59K1% .125W
A5	R38	9	0698-7238	R-F 1.21K 1%.05
A5	R39	2	0757-0338	R-F 1K1% .25W F
A5	R40	0	0698-3154	R-F 4.22K 1%
A5	R41	7	0757-0458	R-F 51.1K1%
A5	R42	8	0698-3136	R-F 17.8K1%
A5	R43	4	0757-0124	R-F 39.2K1%
A5	R44	0	0698-0077	R-F 93.1K 1%
A5	R45	9	0698-3484	R-F 6.65K1%
A5	R46	1	0698-4492	R-F 32.4K1%
A5	R47	2	0698-4493	R-F 34K1% .125W
A5	R48	9	0757-0442	R-F 10K1% .125W
A5	R49	6	0698-3259	R-F 7.87K1%
A5	R50	1	2100-3273	R-VAR 2K 10%
A5	R51	1	0757-0428	RES 1.62K 1%.125
A5	R52	6	2100-3351	RES TRMR 500 10%
A5	R53	4	0757-0281	R-F 2.74K1%
A5	R54	1	2100-3273	R-VAR 2K 10%
A5	R55	3	0757-0438	R-F 5.11K1%
A5	R56	6	0698-4447	R-F 280 1% .125W
A5	R57	8	0698-4308	R-F 16.9K 1%1/8W
A5	R58	1	0698-4468	R-F 1130 1% 1/8W
A5	R59	1	0698-4468	R-F 1130 1% 1/8W
A5	R60	9	0757-0418	R-F 619 1% .125W
A5	R61	2	0698-3700	R-F 715 1% .125W
A5	R62	2	0698-3700	R-F 715 1% .125W
A5	R63	5	0757-0464	R-F 90.9K1%
A5	R64	7	0698-7195	R-F 19.6 1%.05W
A5	R65	5	2100-3350	R-VAR 200 10%
A5	R67	4	0757-0281	R-F 2.74K1%
A5	R68	7	2100-3352	R-VAR 1K .5W
A5	R69	0	0698-3451	RES 133K 1%.125W
A5	R70	4	0698-8827	R-F 1M 1% .125W
A5	R71	4	0698-8827	R-F 1M 1% .125W
A5	R72	4	0698-8827	R-F 1M 1% .125W
A5	R73	4	0698-8827	R-F 1M 1% .125W
A5	R74	4	0698-8827	R-F 1M 1% .125W
A5	R75	4	0698-8827	R-F 1M 1% .125W
A5	R76		1810-0470	R-NETWORK 8X2.2K
A5	R82	4	0757-0273	R-F 3.01K1%
A5	R86	0	2100-3355	R-VAR 100K
A5	R87	9	0698-8913	RES.FXD. 1.5MOHM
A5	R88	0	2100-3355	R-VAR 100K
A5	R89	9	0698-8913	RES.FXD. 1.5MOHM
A5	R90	9	2100-3354	R-VAR 50K 10%
A5	R91	4	0698-8827	R-F 1M 1% .125W
A5	R94	7	0698-7236	R-F 1K 1% .05W
A5	R95	9	0757-0442	R-F 10K1% .125W
A5	R96	9	1810-0207	R-F ARRAY 22K
A5	U1		1826-0955	TRIANGLE/SLOPE GEN.
A5	U2	7	1826-0111	IC-DUAL OP AMPL
A5	U3	7	1826-0111	IC-DUAL OP AMPL
A5	U4	0	1826-0635	IC LIN OP07C
A5	U6	7	1826-0161	IC 324
A5	U7	7	1826-0161	IC 324
A5	U8	0	1820-0471	IC SN7406 INVERT
A5	U9	9	1826-0501	IC-CMOS 4053B
A5	U10	9	1826-0501	IC-CMOS 4053B
A5	U11	2	1820-1546	IC-4052B
A5	U12	9	1826-0501	IC-CMOS 4053B
A5	U14	3	1820-1216	IC-SN74LS138
A5	U16	6	1820-1201	IC-SN74LS08N
A5	U17	6	1820-1201	IC-SN74LS08N
A5	VR2	7	1902-0961	DIODE-ZENER
A6			08111-66506	BD AY SHAPER
A6	C1		0180-3155	C-F ELCO 100UF
A6	C2	5	0160-0576	C-F .1UF 20% CER
A6	C3	5	0160-0576	C-F .1UF 20% CER
A6	C4	5	0160-0576	C-F .1UF 20% CER
A6	C5	5	0160-0576	C-F .1UF 20% CER
A6	C6	6	0160-3878	C-F .001UF 100V
A6	C7	3	0160-3875	C-F 22PF 5% 200V
A6	C8	9	0160-0174	C-F .47UF 25VCER
A6	C9	9	0160-0174	C-F .47UF 25VCER
A6	C10	7	0180-0229	C-F 33UF 10V
A6	C11	9	0160-0174	C-F .47UF 25VCER
A6	C12	4	0160-4527	C-F 56PF 5% 200V
A6	C13	5	0160-0576	C-F .1UF 20% CER
A6	C14	9	0160-0174	C-F .47UF 25VCER
A6	C15	9	0160-0174	C-F .47UF 25VCER
A6	C16	5	0160-0576	C-F .1UF 20% CER
A6	C17	3	0160-3875	C-F 22PF 5% 200V
A6	CR1	8	1901-0047	DIO SI 20V 10NS
A6	CR2	8	1901-0047	DIO SI 20V 10NS
A6	CR3	8	1901-0047	DIO SI 20V 10NS
A6	CR4	8	1901-0047	DIO SI 20V 10NS
A6	L1	4	9100-2247	COIL-CHOKE .10UH

Table 6–3. Replaceable Parts (cont'd)

REFERENCE DESIGNATOR		C D	H-P PART NUMBER	DESCRIPTION
A6	MP1	3	4040-0748	EXTR-PC-BD POLYC
A6	MP2	1	4040-0754	PC EXTR BD BLU
A6	Q1	9	1853-0075	XSTR SI PNP
A6	Q2	2	1853-0218	XSTR SI PNP
A6	Q3	2	1853-0036	XSTR SI 2N3906
A6	Q4	7	1854-0477	XSTR NPN 2N2222A
A6	Q5	2	1854-0795	XSTR MPS-H10
A6	R1	1	1810-0275	R-NETW 9X1KOHM
A6	R2	3	0757-0280	R-F 1K 1% .125W
A6	R3	9	0698-3202	R-F 1.74K1%
A6	R4	9	0757-1094	R-F 1.47K1%
A6	R5	0	0698-4037	R-F 46.4 1%
A6	R6	7	2100-3352	R-VAR 1K .5W
A6	R8	4	0698-3132	R-F 261 1% .125W
A6	R9	1	0757-0428	R-F 1.62K 1%
A6	R10	7	2100-3352	R-VAR 1K .5W
A6	R11	1	0757-0428	R-F 1.62K 1%
A6	R12	4	0698-3132	R-F 261 1% .125W
A6	R13	8	0698-3136	R-F 17.8K1%
A6	R14	0	2100-3355	R-VAR 100K
A6	R15	0	2100-3355	R-VAR 100K
A6	R16	0	2100-3355	R-VAR 100K
A6	R17	8	2100-3353	R-VAR 20K .5W
A6	R18	8	2100-3353	R-VAR 20K .5W
A6	R19	8	0757-0277	R-F 49.9 1%
A6	R20	8	0757-0277	R-F 49.9 1%
A6	R21	9	0698-7238	R-F 1.21K 1%.05
A6	R22	3	0757-0280	R-F 1K 1% .125W
A6	R23	8	2100-3353	R-VAR 20K .5W
A6	R24	1	2100-3273	R-VAR 2K 10%
A6	R25	8	0698-3558	R-F 4.02K1%
A6	R26	8	0757-0433	R-F 3.32K1%
A6	R27	7	2100-3352	R-VAR 1K .5W
A6	R28	9	0698-3434	R-F 34.8 1%
A6	R29	0	0698-4409	R-F 127 1% .125W
A6	R30	3	0757-0280	R-F 1K 1% .125W
A6	R31	3	0757-0280	R-F 1K 1% .125W
A6	R32	0	0698-4409	R-F 127 1% .125W
A6	R33	1	2100-3273	R-VAR 2K 10%
A6	R34	5	0698-3430	R-F 21.5 1%.125W
A6	R35	5	0698-3430	R-F 21.5 1%.125W
A6	R36	1	2100-3207	R-VAR 5K 10%
A6	R37	1	0757-0999	R-F 47.5 1% .5W
A6	R38	1	0757-0999	R-F 47.5 1% .5W
A6	R39	0	0757-0401	R-F 100 1% .125W
A6	R40	0	0757-0401	R-F 100 1% .125W
A6	R41	6	0698-4421	R-F 249 1% .125W
A6	R42	1	0698-7222	R-F 261 1% .05W
A6	R43	5	0698-4123	R-F 499 1% .125W
A6	R44	8	0757-0277	R-F 49.9 1%
A6	R45	0	0757-0401	R-F 100 1% .125W
A6	R46	8	0757-0277	R-F 49.9 1%
A6	R47	0	0698-4392	R-F 71.5 1/8W 1%
A6	R48	5	0698-7226	R-F 383 1% .05W
A6	R49	0	0757-0443	R-F 11K1% .125W
A6	R50	8	2100-3353	R-VAR 20K .5W
A6	R51	7	0757-0284	R-F 150 1% .125W
A6	R52	9	0757-0442	R-F 10K1% .125W
A6	U1	2	1820-1546	ANLG MUXR
A6	U2	4	5180-2417	SHAPER SEL TEMP
A6	U3	1	1820-0802	IC MC10102P
A6	U4	5	1820-1052	IC MC10125L
A6	VR1	6	1902-3097	DIO 5.23V 2% .4W

REFERENCE DESIGNATOR		C D	H-P PART NUMBER	DESCRIPTION
A7			08111-66507	BD AY-CONTROL
A7	C1	9	0160-0174	C-F .47UF 25VCER
A7	C2	9	0160-0174	C-F .47UF 25VCER
A7	C3	4	0180-3155	C-F ELCO 100UF
A7	C4	4	0180-3155	C-F ELCO 100UF
A7	C5	9	0160-0174	C-F .47UF 25VCER
A7	C6	5	0160-0576	C-F .1UF 20% CER
A7	C7	5	0160-0576	C-F .1UF 20% CER
A7	C8	5	0160-0576	C-F .1UF 20% CER
A7	C9	9	0160-0174	C-F .47UF 25VCER
A7	C10	9	0160-0174	C-F .47UF 25VCER
A7	CR1	0	1901-0734	DIO-IN5818
A7	MP1	3	4040-0748	EXTR-PC-BD POLYC
A7	MP2	2	4040-0755	PC EXTR BD VIO
A7	R1	8	1810-0280	R-NETWORK 9X10K
A7	R2	5	0698-4123	R-F 499 1% .125W
A7	R3	9	0757-0442	R-F 10K1% .125W
A7	R4	9	0757-0442	R-F 10K1% .125W
A7	R7	5	0698-4123	R-F 499 1% .125W
A7	R9	9	0757-0442	R-F 10K1% .125W
A7	U1	5	1820-1416	IC SN74LS14N.
A7	U2	4	1820-1423	IC SN74LS123N
A7	U3	1	1820-1199	IC SN74LS04N
A7	U4	1	1820-1199	IC SN74LS04N
A7	U6	6	1820-1144	IC SN74LS02N
A7	U7	6	1820-1144	IC SN74LS02N
A7	U8	7	1820-1202	IC SN74LS10N
A7	U9	7	1820-1202	IC SN74LS10N
A7	U10	6	1820-1243	IC SN 74LS15N
A7	U11	6	1820-1243	IC SN 74LS15N
A7	U12	6	1820-1194	IC SN74LS193N
A7	U13	6	1820-1194	IC SN74LS193N
A7	U14	1	1820-1470	IC SN74LS157N
A7	U15	3	1820-1216	IC SN74LS138N
A7	U16	8	1820-1112	IC SN74LS74AN
A7	U17	6	1820-1508	IC MC14017BCP
A8			08111-66508	BD AY-OUTPUT
A8	C1	3	0160-4493	C-F 27PF 5% 200V
A8	C2	6	0180-3157	C-F ELCO 47UF40V
A8	C3	6	0180-3157	C-F ELCO 47UF40V
A8	C4	0	0160-4383	C-F 6.8PF 200V
A8	C5	6	0160-3878	C-F .001UF 100V
A8	C6	1	0160-3097	C-F .47UF CER
A8	C7	1	0160-3097	C-F .47UF CER
A8	C8	3	0160-3875	C-F 22PF 5% 200V
A8	C9	3	0160-3875	C-F 22PF 5% 200V
A8	C10	7	0160-3879	C-F .01UF 100V
A8	C11	8	0160-4381	C-F 1.5PF 200V
A8	C12	5	0160-0576	C-F .1UF 20% CER
A8	C13	5	0160-0576	C-F .1UF 20% CER
A8	C14	2	0121-0525	C-VAR 1-3PF NPO
A8	C15	5	0160-0576	C-F .1UF 20% CER
A8	C16	5	0160-0576	C-F .1UF 20% CER
A8	C17	5	0160-0576	C-F .1UF 20% CER
A8	C18	5	0180-0582	C-F 270UF 40V
A8	C19	5	0180-0582	C-F 270UF 40V
A8	C20	2	0160-4492	C-F 18PF 200V

Table 6–3. Replaceable Parts (cont'd)

REFERENCE DESIGNATOR		C D	H-P PART NUMBER	DESCRIPTION
A8	C21	1	0160-3097	C-F .47UF CER
A8	C22	4	0180-3155	C-F ELCO 100UF
A8	C23	5	0160-0576	C-F .1UF 20% CER
A8	C24	1	0160-3097	C-F .47UF CER
A8	C25	1	0160-3097	C-F .47UF CER
A8	C26	0	0160-0571	C-F 470PF20% CER
A8	C27	4	0160-4387	C-F 47PF 200V
A8	C28	8	0160-4381	C-F 1.5PF 200V
A8	CR1	7	1901-0179	DIO SI 15V .75NS
A8	CR2	7	1901-0179	DIO SI 15V .75NS
A8	CR3	7	1901-0179	DIO SI 15V .75NS
A8	CR4	7	1901-0179	DIO SI 15V .75NS
A8	CR5	7	1901-0179	DIO SI 15V .75NS
A8	CR6	7	1901-0179	DIO SI 15V .75NS
A8	K1	5	0490-1137	RELAY-REED 5V
A8	K2	5	0490-1137	RELAY-REED 5V
A8	K3	5	0490-1137	RELAY-REED 5V
A8	L1	0	9170-0894	CORE MAGNETIC
A8	*L2	0	9170-0894	CORE MAGNETIC
A8	MP1	3	4040-0748	EXTR-PC-BD POLYC
A8	MP2	2	4040-0747	PC EXTR BD GRA
A8	MP3	6	08111-02303	HEATSINK THERMO
A8	MP4	7	08111-02304	HEATSINK OUTPUT
A8	MP5	3	1205-0329	HT-SINK SGL
A8	MP6	3	1205-0329	HT-SINK SGL
A8	MP7	3	1205-0329	HT-SINK SGL
A8	MP8	3	1205-0329	HT-SINK SGL
A8	MP9	3	1205-0329	HT-SINK SGL
A8	MP10	3	1205-0329	HT-SINK SGL
A8	MP11	3	1205-0329	HT-SINK SGL
A8	MP12	3	1205-0329	HT-SINK SGL
A8	Q1	9	1854-0354	XSTR SI NPN
A8	Q2	2	1853-0218	XSTR SI PNP
A8	Q3	9	1854-0354	XSTR SI NPN
A8	Q4	2	1853-0218	XSTR SI PNP
A8	Q5	9	1853-0314	XSTR 2N2905A PNP
A8	Q6	9	1854-0784	XSTR NPN 2N3866A
A8	Q7	7	1854-0477	XSTR NPN 2N2222A
A8	Q8	1	1854-0637	XSTR SI 2N2219A
A8	Q9	9	1853-0314	XSTR 2N2905A PNP
A8	Q10	1	1854-0637	XSTR SI 2N2219A
A8	Q11	9	1853-0314	XSTR 2N2905A PNP
A8	Q12	1	1854-0637	XSTR SI 2N2219A
A8	Q13	9	1853-0314	XSTR 2N2905A PNP
A8	Q16	2	1855-0082	XSTR FET P
A8	R1	1	0757-0387	R-F 27.4 1%
A8	R2	5	0757-0282	R-F 221 1% .125W
A8	R3	0	0698-4409	R-F 127 1% .125W
A8	R7	5	0757-0349	R-F 22.6K1%.125W
A8	R10	8	0698-3516	R-F 6.34K1%
A8	R11	8	0698-3516	R-F 6.34K1%
A8	R12	4	0757-0447	R-F 16.2K 1%.125
A8	R13	8	0698-3178	R-F 487 1% .125W
A8	R14	5	2100-3350	R-VAR 200 10%
A8	R15	0	0757-0443	R-F 11K1% .125W
A8	R16	0	0757-0443	R-F 11K1% .125W
A8	R18	8	0757-0277	R-F 49.9 1%
A8	R19	8	0757-0277	R-F 49.9 1%
A8	R20	3	0757-0280	R-F 1K 1% .125W
A8	R21	3	0757-0280	R-F 1K 1% .125W
A8	R22	3	0757-0280	R-F 1K 1% .125W
A8	R23	3	0757-0280	R-F 1K 1% .125W
A8	R24	6	0757-0407	R-F 200 1% .125W
A8	R25	8	0698-3558	R-F 4.02K1%
A8	R26	8	0698-3558	R-F 4.02K1%
A8	R27	6	0757-0407	R-F 200 1% .125W
A8	R29	1	0757-0428	R-F 1.62K 1%
A8	R30	1	0757-0428	R-F 1.62K 1%
A8	R31	1	0698-4442	R-F 4.42K1%
A8	R32	1	0698-4442	R-F 4.42K1%
A8	R33	9	0757-0830	R-F 3.92K1% .5W
A8	R34	7	0698-7195	R-F 19.6 1%.05W
A8	R35	8	0698-7196	R-F 21.5 2%.05W
A8	R36	7	0698-7236	R-F 1K 1% .05W
A8	R37	1	0698-7222	R-F 261 1% .05W
A8	R38	8	0698-7196	R-F 21.5 2%.05W
A8	R39	7	0698-7195	R-F 19.6 1%.05W
A8	R40	8	0698-7188	R-F 10 2% .050W
A8	R41	8	0698-7188	R-F 10 2% .050W
A8	R42	1	0757-0428	R-F 1.62K 1%
A8	R43	1	0757-0428	R-F 1.62K 1%
A8	R44	2	0757-0346	R-F 10 1% .125W
A8	R45	2	0757-0346	R-F 10 1% .125W
A8	R46	2	0757-0346	R-F 10 1% .125W
A8	R47	2	0757-0346	R-F 10 1% .125W
A8	R48	3	0766-0025	R-F 101 2% 3W MO
A8	R49	3	0766-0025	R-F 101 2% 3W MO
A8	R50	3	0757-0818	R-F 825 1% .5W
A8	R51	2	0698-3601	R-F 10 5% 2W MO
A8	R52	2	0698-3601	R-F 10 5% 2W MO
A8	R53	2	0698-3601	R-F 10 5% 2W MO
A8	R54	2	0698-3601	R-F 10 5% 2W MO
A8	R55	8	2100-3353	R-VAR 20K .5W
A8	U1	0	1826-0635	IC LIN OP07C
A8	U2	0	1826-0635	IC LIN OP07C
A8	VR1	6	1902-0960	DIO-ZNR 12V 5%
A8	VR2	6	1902-0960	DIO-ZNR 12V 5%
A8	VR3	4	1902-0025	DIO 10V 5% .4W
A10			08111-66510	BD AY-DISPLAY
A10	C1	4	0160-4387	C-F 47PF 200V
A10	C2	9	0160-0174	C-F .47UF 25VCER
A10	C3	9	0160-0174	C-F .47UF 25VCER
A10	C4	7	0160-5437	C-F .068UF 160V
A10	C5	5	0160-0576	C-F .1UF 20% CER
A10	C8	5	0160-0576	C-F .1UF 20% CER
A10	C9	5	0160-0576	C-F .1UF 20% CER
A10	DS1	2	1990-0846	DISPLAY SOLID ST
A10	DS2	2	1990-0846	DISPLAY SOLID ST
A10	DS3	2	1990-0846	DISPLAY SOLID ST
A10	DS4	2	1990-0846	DISPLAY SOLID ST
A10	DS5	6	1990-0486	LED-VISIBLE RED
A10	DS6	6	1990-0486	LED-VISIBLE RED
A10	DS7	6	1990-0486	LED-VISIBLE RED
A10	DS8	6	1990-0486	LED-VISIBLE RED
A10	DS10	6	1990-0486	LED-VISIBLE RED
A10	DS11	6	1990-0486	LED-VISIBLE RED
A10	DS12	6	1990-0486	LED-VISIBLE RED
A10	DS13	6	1990-0486	LED-VISIBLE RED
A10	DS14	6	1990-0486	LED-VISIBLE RED
A10	DS15	6	1990-0486	LED-VISIBLE RED
A10	DS16	6	1990-0486	LED-VISIBLE RED

Table 6–3. Replaceable Parts (cont'd)

REFERENCE DESIGNATOR		C D	H-P PART NUMBER	DESCRIPTION
A10	DS17	6	1990-0486	LED-VISIBLE RED
A10	DS18	6	1990-0486	LED-VISIBLE RED
A10	DS19	0	1990-0696	LED-VISIBLE
A10	R1	9	1810-0330	R-NETWORK 8X470
A10	R2	0	0757-0401	R-F 100 1% .125W
A10	R7	1	0698-7272	R-F 31.6K 1%.05
A10	R8	5	0757-0472	R-F 200K1% .125W
A10	S1	4	3101-2530	SW RKR
A10	U1	1	1826-0876	A/D 3-1/2-DGT
A11			08111-66511	BD AY-SWITCH UPR
A11	CR11	1	1901-1098	DIO-1N4150 50V
A11	MP1	8	5040-9322	KEY-CAP QUARTER
A11	MP2	8	5040-9322	KEY-CAP QUARTER
A11	MP3	8	5040-9322	KEY-CAP QUARTER
A11	MP4	8	5040-9322	KEY-CAP QUARTER
A11	MP5	8	5040-9322	KEY-CAP QUARTER
A11	MP6	8	5040-9322	KEY-CAP QUARTER
A11	MP7	8	5040-9322	KEY-CAP QUARTER
A11	MP8	8	5040-9322	KEY-CAP QUARTER
A11	Q1	2	1853-0036	XSTR SI 2N3906
A11	Q2	1	1854-0215	XSTR SI 2N3904
A11	R11	3	0698-4436	R-F 2.8K1% .125W
A11	R12	5	0757-0274	R-F 1.21K1%
A11	R13	5	0698-4123	R-F 499 1% .125W
A11	R14	5	0698-4404	R-F 105 1% .125W
A11	R15	4	0698-4453	R-F 402 1% .125W
A11	R16	5	0698-3498	R-F 8.66K1%.125W
A11	R18	6	0757-0283	R-F 2K1% .125W F
A11	R20	5	0757-0290	R-F 6.19K1%.125W
A11	R21	0	0698-3493	R-F 4.12K1%
A11	R26	9	0757-0442	R-F 10K1% .125W
A11	R27	9	0757-0442	R-F 10K1% .125W
A11	R28	9	0757-0442	R-F 10K1% .125W
A11	R29	0	0698-3154	R-F 4.22K 1%
A11	R30	6	0757-0465	R-F 100K1% .125W
A11	R31	9	0757-0442	R-F 10K1% .125W
A11	R32	8	0757-0441	R-F 8.25K1%
A11	R33	6	0698-3499	R-F 40.2K1%
A11	R34	6	0757-0465	R-F 100K1% .125W
A11	R35	8	0698-4431	R-F 2.05K1%
A11	R41	0	0698-3279	R-F 4.99K1%
A11	R42	8	0757-0706	R-F 51.1 1% .25W
A11	R44	6	0757-0283	R-F 2K1% .125W F
A11	R45	6	0698-3449	R-F 28.7K1%
A11	R46	4	0757-0447	R-F 16.2K 1%.125
A11	S1	2	3101-1762	SW-P-BRN MOM.45A
A11	S3	5	3101-2515	SW-P-BTN 4STA
A11	S5	4	3101-2514	SW-P-BTN 3STA
A11	U11	3	1820-1745	IC MC14001BCP
A11	U12	2	1820-1546	ANLG MUXR
A11	W1	3	08111-61603	CBL AY AMPL OUT
A12			08111-66512	BD AY-SWITCH LOW
A12	DS1	5	1990-0485	LED VISIBLE GRN
A12	MP1	7	5040-9321	KEY CAP QUARTER
A12	MP2	7	5040-9321	KEY CAP QUARTER
A12	MP3	7	5040-9321	KEY CAP QUARTER
A12	MP4	7	5040-9321	KEY CAP QUARTER
A12	MP5	7	5040-9321	KEY CAP QUARTER
A12	MP6	7	5040-9321	KEY CAP QUARTER
A12	MP7	7	5040-9321	KEY CAP QUARTER
A12	R1	9	0757-0442	R-F 10K1% .125W
A12	R2	6	0698-4413	R-F 154 1% .125W
A12	R3	6	0757-0407	R-F 200 1% .125W
A12	R4	2	0757-0411	R-F 332 1% .125W
A12	R5	9	0757-0442	R-F 10K1% .125W
A12	R6	3	0757-0280	R-F 1K 1% .125W
A12	R7	0	0757-0401	R-F 100 1% .125W
A12	S2	3	3101-2513	SW-P-BTN 4STA
A12	S4	2	3101-2512	SW P-BTN LINE
A12	W2	2	5180-2407	CBL AY RBN 60MM
A13			08111-66513	BD AY-SW & FUSE
A13	S1	1	3101-2511	SW P-BTN LINE
A13	S2	6	3101-2300	SWITCH-SLIDE
A13	S3	6	3101-2300	SWITCH-SLIDE

OPTION 001

Table 6–3. Replaceable Parts (cont'd)

REFERENCE DESIGNATOR	CD	H-P PART NUMBER	DESCRIPTION
FRAME			
A3		08111-66503	BD AY-BURST
A9		08111-66509	BD AY BRSTNO.CTL
A21		08111-66521	BD AY- MOTHER
A30 } SEE NOTE		08111-66530	BD AY DISPLAY
A31 } SEE NOTE		08111-66531	BD AY-SWITCH UP
S2		3101-1701	SW TOGGLE SPDT

NOTE: A30 & A31 ARE SUB-ASSEMBLIES OF A41 (08111-66541) AND ARE NOT SEPARATELY AVAILABLE.

REFERENCE DESIGNATOR	CD	H-P PART NUMBER	DESCRIPTION
A3		08111-66503	BD AY-BURST
A3 C1	5	0160-0576	C-F .1UF 20% CER
A3 C2	3	0180-0291	C-F 1UF 35V
A3 C3	5	0160-0576	C-F .1UF 20% CER
A3 C4	5	0160-0576	C-F .1UF 20% CER
A3 C5	1	0160-0572	C-F 2200PF CER
A3 C6	6	0160-4040	C-F 1000PF 100V
A3 C7	6	0160-4371	C-F 680 PF
A3 C8	6	0160-4371	C-F 680 PF
A3 C9	5	0160-0576	C-F .1UF 20% CER
A3 C10	5	0160-0576	C-F .1UF 20% CER
A3 C11	5	0160-0576	C-F .1UF 20% CER
A3 C12	5	0160-0576	C-F .1UF 20% CER
A3 C13	5	0160-0576	C-F .1UF 20% CER
A3 C14	5	0180-2207	C-F 100UF 10V
A3 C15	2	0160-3874	C-F 10PF 200V
A3 C16	6	0160-4040	C-F 1000PF 100V
A3 CR1	1	1901-1098	DIO-SWIT.1N4150
A3 CR2	1	1901-1098	DIO-SWIT.1N4150
A3 CR3	1	1901-1098	DIO-SWIT.1N4150
A3 CR4	1	1901-1098	DIO-SWIT.1N4150
A3 MP1	3	4040-0748	PC EXTR BD BLK
A3 MP2	8	4040-0751	PC EXTR BD ORN
A3 R1	5	0757-0472	R-F 200K1% .125W
A3 R2	4	0698-4479	R-F 14K1% .125W
A3 R3	4	0698-8827	R-F 1M 1% .125W
A3 R4	1	0698-8345	R-F 634K 1% .125
A3 R5	5	0757-0472	R-F 200K1% .125W
A3 R6	7	0698-4125	R-F 953 1% .125W
A3 R7	8	1810-0206	R-NETWORK 7X10K
A3 R8	8	1810-0280	R-NETWORK 9X10K
A3 R9		0698-4421	R-F 249 1% .125W
A3 R10		0698-4421	R-F 249 1% .125W
A3 R11	6	0757-0465	R-F 100K1% .125W
A3 R12	9	0757-0442	R-F 10K1% .125W
A3 R13	9	0757-0442	R-F 10K1% .125W
A3 R14	5	0698-3498	R-F 8.66K1%
A3 R15	5	0698-4412	R-F 143 1% .125W
A3 R16	6	0757-0449	R-F 20K1% .125W
A3 U1	3	1820-1208	IC-SN74LS32
A3 U2	5	1820-1200	IC SN74LS05
A3 U3	1	1820-2014	IC DGT MC14069BC
A3 U4	6	1820-1201	IC-SN74LS08N
A3 U5	5	1820-1961	IC MC14023BCP
A3 U6	9	1820-1486	IC MC14081BCP
A3 U7	6	1820-1144	IC SN74LS02N
A3 U8	6	1820-1970	IC DIG 14071B
A3 U9	6	1820-1970	IC DIG 14071B
A3 U10	9	1820-1486	IC MC14081BCP
A3 U11	9	1820-1486	IC MC14081BCP
A3 U12	3	1820-1208	IC SN74LS32N
A3 U13	7	1820-0931	IC CD4029BE
A3 U14	7	1820-0931	IC CD4029BE
A3 U15	7	1820-0931	IC CD4029BE
A3 U16		1820-1964	IC MC14027BCP
A3 U17	1	1820-1454	IC SN745168N
A3 U18	6	1820-1277	IC SN74LS 192 N
A3 U19	6	1820-1277	IC SN74LS 192 N
A3 U20	8	1820-0693	IC SN74S74N TTL
A3 U21	4	1820-1423	IC SN74LS123N
A3 U22	4	1820-1449	IC 74S32
A3 W2		5180-2408	CBL AY RBN 280MM
A9		08111-66509	BD AY BRSTNO.CTL
A9 C1	9	0160-0174	C-F .47UF 25VCER
A9 J5	5	1251-3708	CONN-POST 10F
A9 J6	5	1251-3708	CONN-POST 10F
A9 J7	2	1251-3119	CONN 20PIN RIBN
A9 Q1	1	1854-0215	XSTR SI 2N3904
A9 R1	9	0757-0442	R-F 10K1% .125W
A9 R2	7	0757-0200	R-F 5.62K1%
A9 R3	6	0698-3499	R-F 40.2K1%
A9 R4	8	0757-0467	R-F 121K 1%
A9 R5	0	0698-3279	R-F 4.99K1%
A9 R6	8	0698-4431	R-F 2.05K1%
A9 R7	0	0698-3162	R-F 46.4K1%
A9 R8	2	0757-0453	R-F 30.1K1%.125W
A9 R9	2	0698-4435	R-F 2.49K1%
A9 R10	6	0757-0449	R-F 20K1% .125W
A9 U1	3	1820-1745	IC MC14001BCP
A9 U2	8	1820-1112	IC DGTL SN74LS74
A9 U3	6	1820-1277	IC SN74LS 192 N
A9 U4	6	1820-1277	IC SN74LS 192 N
A9 U5	6	1820-1277	IC SN74LS 192 N
A9 U6	6	1820-1277	IC SN74LS 192 N
A9 U7	3	1826-0175	IC DUAL 14-DIP
A21		08111-66521	BD AY- MOTHER
A21 C1		0180-3158	C-F ELCO 6800UF
A21 C2		0180-3162	C-F ELCO 4700UF
A21 C3		0180-3161	C-F ELCO 3300VF
A21 C4		0180-3161	C-F ELCO 3300VF
A21 CR1	3	1901-0638	DIO AY-SI 100V
A21 CR2	7	1906-0096	DIO-FULL WAVE BR
A21 J1	7	1251-3825	CONNECTOR, 5 PIN
A21 J2	8	1251-2026	CONN PC 36CONT R
A21 J3	8	1251-2026	CONN PC 36CONT R
A21 J4	8	1251-2026	CONN PC 36CONT R
A21 J5	8	1251-2026	CONN PC 36CONT R
A21 J6	8	1251-2026	CONN PC 36CONT R
A21 J7	8	1251-2026	CONN PC 36CONT R
A21 J8	8	1251-2026	CONN PC 36CONT R
A21 J12		1251-7456	CONN 25 CONT

Table 6–3. Replaceable Parts (cont'd)

REFERENCE DESIGNATOR		C D	H-P PART NUMBER	DESCRIPTION
A21	Q3	6	1853-0212	XSTR 2N5194 SI
A21	Q4	5	1854-0368	XSTR 2N5191
A21	Q7	6	1853-0212	XSTR 2N5194 SI
A21	Q8	5	1854-0368	XSTR 2N5191
A21	R12	1	0757-0197	R-F 1.5K1% .5W
A21	R13	1	0757-0197	R-F 1.5K1% .5W
A21	R20	6	0812-0045	R-F .15 5% 3W
A21	R21	6	0812-0045	R-F .15 5% 3W
A21	R25	9	0757-0731	R-F 825 1% .25W
A21	R28	9	0757-0731	R-F 825 1% .25W
A21	R31	4	0811-2455	R-F 2 1% 3W
A21	R32	4	0811-2455	R-F 2 1% 3W
A21	R39	3	0757-0280	R-F 1K1% .125W F
A21	R40	3	0757-0280	R-F 1K1% .125W F
A21	R41	3	0757-0280	R-F 1K1% .125W F
A21	R42	3	0757-0280	R-F 1K1% .125W F
A30			08111-66530	BD AY DISPLAY
A30	C1	4	0160-4494	C-F 39PF 200V
A30	C2	9	0160-0174	C-F .47UF 25VCER
A30	C3	9	0160-0174	C-F .47UF 25VCER
A30	C4		0160-5437	C-F .068UF 160V
A30	C5	5	0160-0576	C-F .1UF 20% CER
A30	C8	5	0160-0576	C-F .1UF 20% CER
A30	C9	5	0160-0576	C-F .1UF 20% CER
A30	DS1		1990-0846	DISPLAY SOLID ST
A30	DS2		1990-0846	DISPLAY SOLID ST
A30	DS3		1990-0846	DISPLAY SOLID ST
A30	DS4		1990-0846	DISPLAY SOLID ST
A30	DS5	6	1990-0486	LED-VISIBLE RED
A30	DS6	6	1990-0486	LED-VISIBLE RED
A30	DS7	6	1990-0486	LED-VISIBLE RED
A30	DS8	6	1990-0486	LED-VISIBLE RED
A30	DS9	6	1990-0486	LED-VISIBLE RED
A30	DS10	6	1990-0486	LED-VISIBLE RED
A30	DS11	6	1990-0486	LED-VISIBLE RED
A30	DS12	6	1990-0486	LED-VISIBLE RED
A30	DS13	6	1990-0486	LED-VISIBLE RED
A30	DS14	6	1990-0486	LED-VISIBLE RED
A30	DS15	6	1990-0486	LED-VISIBLE RED
A30	DS16	6	1990-0486	LED-VISIBLE RED
A30	DS17	6	1990-0486	LED-VISIBLE RED
A30	DS18	6	1990-0486	LED-VISIBLE RED
A30	DS19	0	1990-0696	LED-VISIBLE
A30	R1	9	1810-0330	R-NETWORK 8X470
A30	R2	0	0757-0401	R-F 100 1% .125W
A30	R7	1	0698-7272	R-F 31.6K 1%.05
A30	R8	5	0757-0472	R-F 200K1% .125W
A30	S1		3101-2530	SW RKR
A30	S2		3101-2530	SW RKR
A30	S3		3101-2530	SW RKR
A30	S4		3101-2530	SW RKR
A30	U1		1826-0876	AD-CONV ICL7107
A31			08111-66531	BD AY-SWITCH UP
A31	CR11	1	1901-1098	DIO-SWIT.1N4150
A31	J5	2	1251-4084	CONN POST 10MALE
A31	J6	2	1251-4084	CONN POST 10MALE
	MP1–8	8	5040-9322	KEY CAP QUARTER
A31	Q1	2	1853-0036	XSTR SI 2N3906
A31	Q2	1	1854-0215	XSTR SI 2N3904
A31	R11	3	0698-4436	R-F 2.8K1% .125W
A31	R12	5	0757-0274	R-F 1.21K1%
A31	R13	5	0698-4123	R-F 499 1% .125W
A31	R14	5	0698-4404	R-F 105 1% .125W
A31	R15	4	0698-4453	R-F 402 1% .125W
A31	R16	5	0698-3498	R-F 8.66K1%
A31	R18	6	0757-0283	R-F 2K1% .125W F
A31	R20	5	0757-0290	R-F 6.19K1%
A31	R21	0	0698-3493	R-F 4.12K1%
A31	R26	9	0757-0442	R-F 10K1% .125W
A31	R27	9	0757-0442	R-F 10K1% .125W
A31	R28	9	0757-0442	R-F 10K1% .125W
A31	R29	0	0698-3154	R-F 4.22K 1%
A31	R30	6	0757-0465	R-F 100K1% .125W
A31	R31	9	0757-0442	R-F 10K1% .125W
A31	R32	8	0757-0441	R-F 8.25K1%
A31	R33	6	0698-3499	R-F 40.2K1%
A31	R34	6	0757-0465	R-F 100K1% .125W
A31	R35	8	0698-4431	R-F 2.05K1%
A31	R41	0	0698-3279	R-F 4.99K1%
A31	R42	8	0757-0706	R-F 51.1 1% .25W
A31	R44	6	0757-0283	R-F 2K1% .125W F
A31	R45	6	0698-3449	R-F 28.7K1%
A31	R46	4	0757-0447	R-F 16.2K 1%.125
A31	S1	2	3101-1762	SW-P-BRN MOM.45A
A31	S3		3101-2515	SW-P-BTN 4STA
A31	S5		3101-2514	SW-P-BTN 3STA
A31	U11	3	1820-1745	IC MC14001BCP
A31	U12	2	1820-1546	IC-4052B

SECTION VII
BACKDATING

7–1 INTRODUCTION

7–2 This section contains backdating information which adapts this manual to instrument with serial numbers lower than that shown on the title page.

7–3 CHANGE SEQUENCE

7–4 Changes are listed in the serial number order that they occured in the manufacture of the instrument. However, in adapting this manual to an instrument with a particular serial number, apply the changes in reverse order. That is, begin with the latest change and progress to the earliest change that applies to the serial number in question. Table 7–1 lists the serial numbers to which each change applies.

Table 7-1. Manual Backdating Changes

Instrument Serial Number	Make Manual Changes
2123G00100 and lower	1 to 14
2123G00150 and lower	2 to 14
2123G00165 and lower	3 to 14
2123G00235 and lower	4 to 14
2123G00285 and lower	5 to 14
2123G00435 and lower	6 to 14
2215G00485 and lower	7 to 14
2215G00535 and lower	8 to 14
2215G00715 and lower	9 to 14
2215G00835 and lower	10 to 14
2215G01075 and lower	11 to 14
2215G01540 and lower	12 to 14
2215G01590 and lower	13 to 14
2215G01840 and lower	14

CHANGE 1 For serial numbers 2123G00100 and lower.

In Table 6–3. Replaceable Parts, make the following changes to the parts lists stated:
Frame list: Delete MP34
A12 list: Delete A12R7

Change associated schematic and component layout diagrams as necessary.

CHANGE 2 For serial numbers 2123G00150 and lower.

In Table 6–3. Replaceable Parts, make the following changes to the parts lists stated:
Frame list: Delete MP5, MP6 and MP7
A3 list: Delete A3C16

Change associated schematic and component layout diagrams as necessary.

CHANGE 3 For serial numbers 2123G00165 and lower.

In Table 6–3. Replaceable Parts, make the following changes to the parts lists stated:
A 5 list: Add: A5C9 0160–3725 C–F 0.68 μF 100 V
Change A5C8 to: 0160–3376 C–F 3.3 μF 63 V

Change associated schematic and component layout diagrams as necessary.
C9 is connected in parallel to C8.

CHANGE 4 For serial numbers 2123G00235 and lower.

In Table 6–3. Replaceable Parts, make the following changes to the parts lists stated:
Frame list: Change MP42 to MP42 (X4) 0340–0451 INS WASHER

CHANGE 5 For serial numbers 2123G00285 and lower.

In Table 6–3. Replaceable Parts, make the following changes to the parts lists stated:
A3 list: Change A3R15 to: 0698–4411 R–F 140 1 % .125 W
Frame list: Delete R1

Change the associated schematic and component layout diagrams as necessary.

CHANGE 6 For serial numbers 2123G00435 and lower

Delete the following from Table 6-3, Replaceable Parts, and from the A6 component layout:

A6R49, A6R50, A6R51, A6R52 and A6Q3

Add the following to Table 6-3, Replaceable Parts, and to the A6 component layout:

A6R7 0698-7260 R-F 10K

On the A6 component layout, A7 is located directly below R5.

Change the associated schematic as shown in the Figure 7-1.

Delete any reference to A6R50 in the Adjustment Procedure (page 5-1, para 5-2, step 3; page 5-4,para 5-4,step 5; page 5-5, step 30)

CHANGE 7 For serial numbers 2215G00485 and lower

Delete A8L2 from parts list, component layout and schematic.

CHANGE 8 For serial numbers 2215G00535 and lower

Change Table 6-3, Replaceable Parts to read:

A8C8,C9	0160-3878	C-F .001UF 100V
A8L1	9170-0894	CORE MAGNETIC

CHANGE 9 For serial numbers 2215G00715 and lower

Change Table 6-3, Replaceable Parts to read:

A8Q6	1854-0637	XSTR SI 2219A

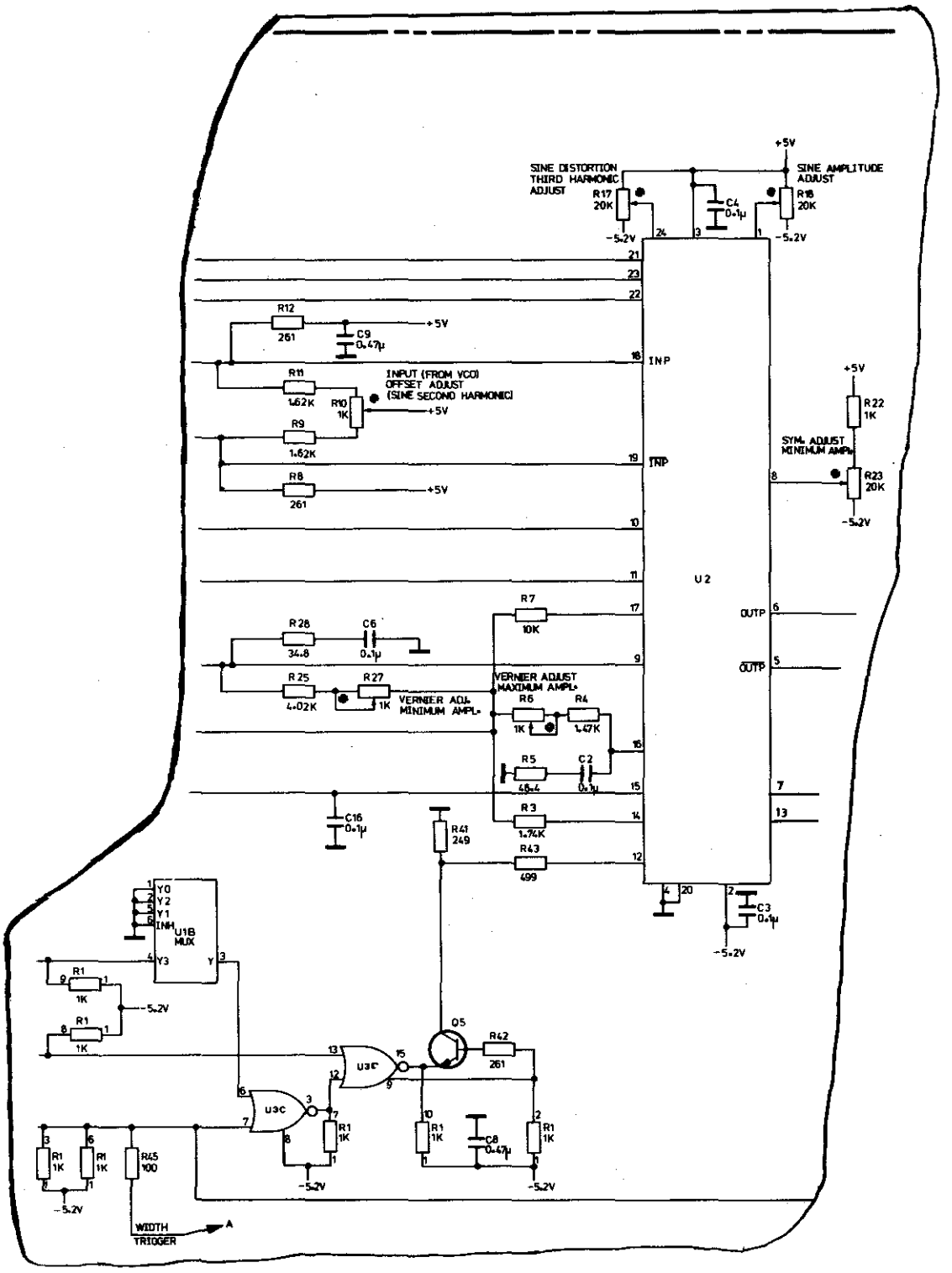
SINE DISTORTION THIRD HARMONIC ADJUST
R17 20K
-5.2V
+5V
C4 0.1µ
SINE AMPLITUDE ADJUST
R18 20K
-5.2V
R12 261
C9 0.47µ
+5V
INP
R11 1.62K
INPUT (FROM VCO) OFFSET ADJUST (SINE SECOND HARMONIC)
R10 1K
+5V
R9 1.62K
INP
R8 261
+5V
+5V
R22 1K
SYM. ADJUST MINIMUM AMPL.
R23 20K
-5.2V
U2
R7 10K
OUTP
OUTP
R28 34.8
C6 0.1µ
R25 4.02K
R27 1K
VERNIER ADJ. MINIMUM AMPL.
VERNIER ADJUST MAXIMUM AMPL.
R6 1K
R4 1.47K
R5 48.4
C2 0.1µ
R3 1.74K
R43 499
C16 0.1µ
R41 249
C3 0.1µ
-5.2V
Y0
Y2
Y1
INH
U1B MUX
Y3
Y
R1 1K
-5.2V
R1 1K
Q5
R42 261
U3C
U3C
R1 1K
R1 1K
C8 0.47µ
R1 1K
-5.2V
-5.2V
R1 1K
R1 1K
R45 100
-5.2V
WIDTH TRIGGER
A

Figure 7-1

CHANGE 10 For serial numbers 2215G00835 and lower

Change Table 6-3, Replaceable Parts to read:

A6Q1 5180-2409 XSTR SEL PAIR

Delete the following components from the parts list, component layout and schematic:

A6R53*, A6RT1*

CHANGE 11 For serial numbers 2215G01075 and lower

Delete the following components from the parts list, component layout and schematic:

A7C9, A7C10, A7R3, A7R4 and A7U2

On Service Sheet 4, U1E pin1 is connected to U8C/U9C pin 10, and U1D pin 8 is connected to U8A/U9A pin 13

CHANGE 12 For serial numbers 2215G01540 and lower

Change Table 6-3, Replaceable Parts to read:

A6C10 0160-0174 C-F 0.47UF 25VCER

CHANGE 13 For serial numbers 2215G01590 and lower

Change Table 6-3, Replaceable Parts to read:

A5R9 0757-0278 R-F 1.78K

CHANGE 14 For serial numbers 2215G01840 and lower

Change Table 6-3,Replaceable Parts to read:

A7CR1 1901-0731 DIO-PWR 400V 1A

SECTION VIII
SERVICE

8–1 INTRODUCTION

8–2 This section contains the information to service the HP Model 8111A. The information includes theory of operation, troubleshooting, schematics, component layouts and block diagram.

8–3 The schematics and component layouts are organized as 'Service Sheets' which are identified by a large number within a square in the lower corners. A table relating these Service Sheets to board assemblies is given in Table 8–1. Schematic diagram symbols are given in Table 8–3.

Table 8–1. Index of Assemblies

Assembly	Service Sheet
A1 (A21) Mother Board	1
A2 Regulator Board	2
A3 Burst Board (Opt. 001)	6
A4 Width Generator Board	9
A5 VCO Board	8
A6 Shaper Board	10
A7 Control Board	4
A8 Output Board	11
A9 Burst No. Control Board (Opt. 001)	7
A10 (A30) Display Board	5
A11 (A31) Upper Switch Board	3
A12 Lower Switch Board	3
A13 Switch and Fuse Board	2

NOTE: The numbers given in brackets e.g. (A21) refer to the boards as used in Option 001 (Burst) instruments where they differ from the standard type.

8–4 SAFETY CONSIDERATIONS

8–5 This section contains warnings and cautions that must be followed for your protection and to avoid damage to the equipment:

WARNING

Maintenance described herein is performed with power supplied to the instrument, and protective covers removed. Such maintenance should be performed only by service-trained personnel who are aware of the hazards involved (for example, fire and electrical shock). Where maintenance can be performed without power applied, the power should be removed.
When servicing is complete, the After Service Safety Check must be performed.

8–6 AFTER SERVICE SAFETY CHECK

8–7 Execute the following checks when servicing is completed.

8–8 Disconnect power cord from line. Visually inspect interior of instrument for any sign of abnormal internally generated heat, such as discolored printed circuit boards or components, damaged insulation, or evidence of arcing. Determine cause and remedy.

8–9 Check cabinet/ground pin continuity in accordance with IEC/VDE. Flex the power cord while making the measurement to detect any intermittent discontinuity. Check internal ground connections on boards and frame. Also check resistance of any front or rear panel ground terminals marked ⏚ .

8–10 Check cabinet/line isolation in accordance with IEC/VDE. Replace any component which results in a failure or refer to production Memo or Service Note issued by product division for alternate action.

8–11 Check line fuse to verify that the proper value is installed.

8–12 Check that safety covers are installed.

8–13 Check that the coaxial and flat cables are properly connected. Check that all boards are properly fitted and the heatsink connections between the Output board A8 and front frame member are secure.

8–14 Inform Hewlett-Packard (internally, the responsible product division) of any repeated failures in the above tests or any other safety features.

8–15 SERVICE BLOCKS (THEORY/ TROUBLESHOOTING)

8–16 The theory of operation and troubleshooting

Table 8–3. Schematic Diagram Notes (1 of 2)

The following symbols conform, as far as possible, with ANSI Y 32.2, IEEE No. 315 and ANSI Y32.14 (for the logic symbols). These standards should be consulted when further informations is required.

General

Units — Resistance values are in ohms, capacitance values in microfarads and inductance values in microhenries unless otherwise noted !

P/O — Part of

✳ — Asterisk denotes a factory selected value. The value shown is the nominal value.

Encloses front panel nomenclature.

Encloses rear panel nomenclature.

Heavy line indicates signal path.

Heavy dashed line indicates primary feedback path.

947 — Wire colour code. Same as resistor colour code. First number is wire body colour.

Wire or plug used as link.

Test point in a circuit. Point may/may not be identified on P.C. board.

Used with trimmer potentiometers or capacitors to indicate screwdriver adjustment.

Direct connection to earth.

Ground connection to instrument chassis or frame.

Used when a number of common-return connections are at the same potential. If there is more than one such system in the same circuit, numbers are written in the triangles so that all connections with the same potential have the same number.

xV — Specific potential difference with respect to a potential reference level, eg. +10 V

Schematic Referencing

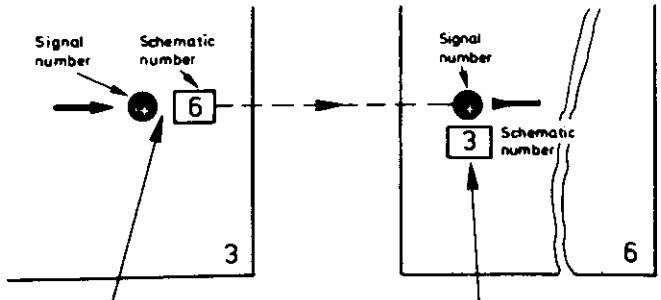

These references on a signal leaving a schematic diagram indicate the signal destination. The circle contains the signal number and the square contains the number of the schematic to which that signal goes.

These references on a signal entering a schematic diagram indicate the signal origin. The circle contains the signal number and the square contains the number of the schematic to which that signal originates.

Components

Normally open toggle switch. Circles (O) are used for the contacts to indicate a locking type switch.

Spring return, 2-position transfer switch. Triangle (▲) are used for the contacts to indicate a non-locking type switch.

2-position, 2-pole slide switch.

Air cored inductor.

Air cored transformer. The dot (●) is used, when necessary, to indicate instantaneous polarity.

Iron core

Ferrite core

bead — Ferrite bead

Varactor diode

Multi-junction diode

Diode

Zener diode

Schottky diode

Light Emitting Diode (LED)

Photodiode

Fuse

Neon

Filament lamp

Table 8–3. Schematic Diagram Notes (2 of 2)

Terminals and Connectors

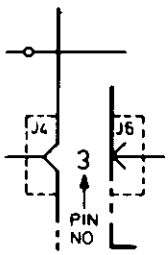

Soldered connection.

Example of fixed male and female connectors with plug and socket and contact designators, eg. P.C. board edge connector and socket.

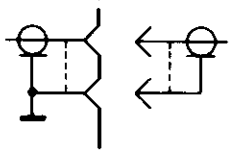

example of bulkhead mounted coaxial socket with free coaxial plug and cable.

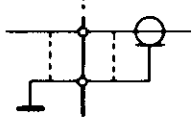

example of coaxial cable with termination soldered to P.C. board.

Analog Symbols

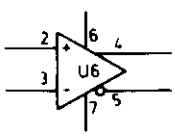

Operational amplifier

Voltage source

Current source

Logic Symbols

Positive logic is used unless otherwise specified.

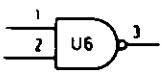

2-input NAND gate

open collector

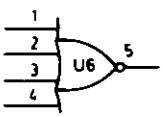

4-input NOR gate

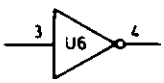

Inverter

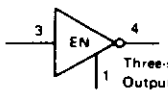

Three-state device. Output is high-impedance when EN is false, irrespective of input. Normal operation when EN is true.

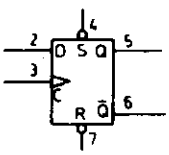

Flip-flop

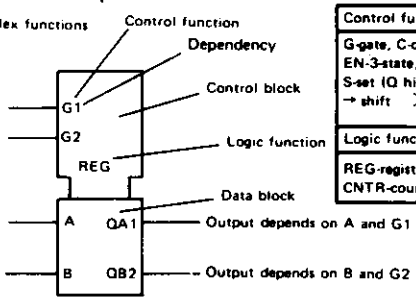

Control functions:
G-gate, C-clock EN-3-state, R-reset (Q low) S-set (Q high), ↑ (↓)-count up (down) → shift > edge-triggered.
Logic functions:
REG-register, SEL-selector CNTR-counter, (DE)MUX-(de)multiplexer

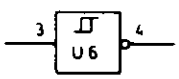

Schmitt trigger

Wired AND connection

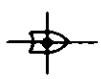

Wired OR connection

1820-0693 DUAL D-TYPE POSITIVE-EDGE-TRIGGERED FLIP-FLOPS WITH PRESET AND CLEAR (S74)

FUNCTION TABLE

INPUTS				OUTPUTS	
PRESET	CLEAR	CLOCK	D	Q	$\bar{Q}$
L	H	X	X	H	L
H	L	X	X	L	H
L	L	X	X	H*	H*
H	H	↑	H	H	L
H	H	↑	L	L	H
H	H	L	X	Q_0	$\bar{Q}_0$

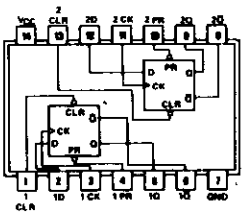

1820-0802 QUAD 2-INPUT NOR GATE (ECL)

POSITIVE LOGIC NEGATIVE LOGIC

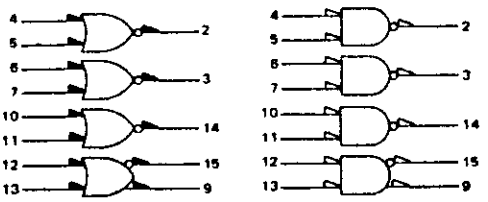

V_{CC1} = Pin 1
V_{CC2} = Pin 16
V_{EE} = Pin 8

1820-0817 DUAL TYPE D MASTER-SLAVE FLIP-FLOP (ECL)

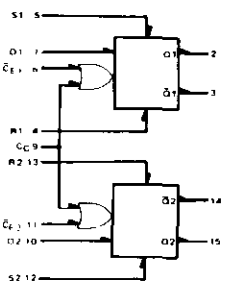

CLOCKED TRUTH TABLE

C	D	Q_{n+1}
L	⊘	Q_n
H	L	L
H	H	H

⊘ Don't Care
C = C_E + C_C
▲ Clock H is a clock transition from a low to a high state

V_{CC1} = Pin 1
V_{CC2} = Pin 16
V_{EE} = Pin 8

R S TRUTH TABLE

R	S	Q_{n+1}
L	L	Q_n
L	H	H
H	L	L
H	H	N.D.

N.D. - Not Defined

1820-0931 PRESETTABLE BINARY/DECADE UP/DOWN COUNTER

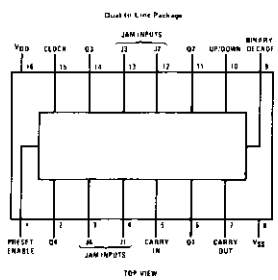

Logic Waveforms

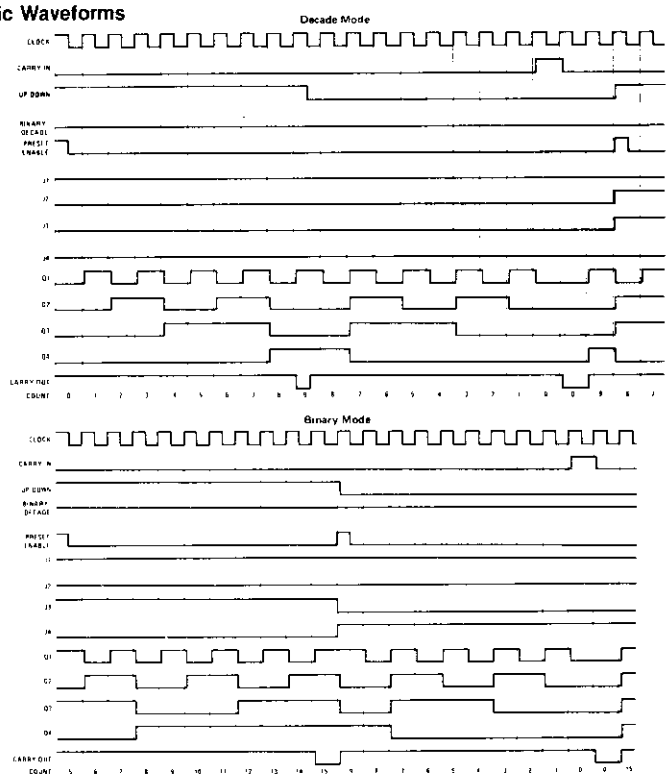

1820-1052 QUAD ECL TO TTL CONVERTER

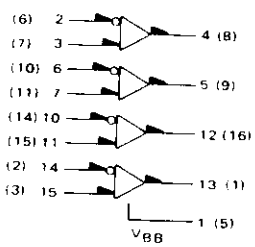

Gnd = Pin 16 (4)
V_{CC} (+5.0 Vdc) = Pin 9 (13)
V_{EE} (−5.2 Vdc) = Pin 8 (12)

1820-1112 DUAL D-TYPE POSITIVE-EDGE-TRIGGERED FLIP-FLOPS WITH PRESET AND CLEAR (LS74)

FUNCTION TABLE

INPUTS				OUTPUTS	
PRESET	CLEAR	CLOCK	D	Q	$\bar{Q}$
L	H	X	X	H	L
H	L	X	X	L	H
L	L	X	X	H*	H*
H	H	↑	H	H	L
H	H	↑	L	L	H
H	H	L	X	Q_0	$\bar{Q}_0$

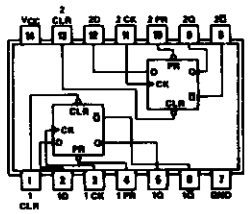

1820-1194 SYNCHRONOUS 4 BIT UP/DOWN COUNTER (DUAL CLOCK WITH CLEAR)

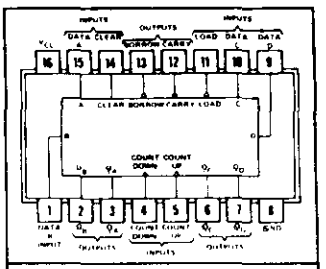

logic: Low input to load sets $Q_A = A$, $Q_B = B$, $Q_C = C$, and $Q_D = D$

typical clear, load, and count sequences

Illustrated below is the following sequence:

1. Clear outputs to zero.
2. Load (preset) to binary thirteen.
3. Count up to fourteen, fifteen, carry, zero, one, and two.
4. Count down to one, zero, borrow, fifteen, fourteen, and thirteen.

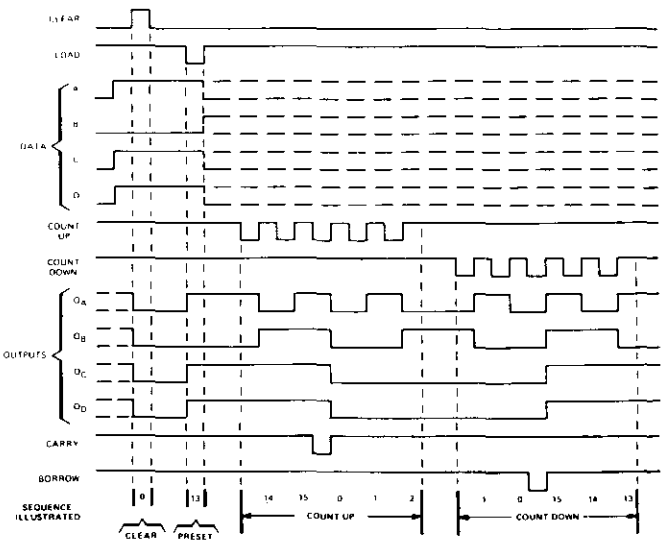

NOTES: A. Clear overrides load, data, and count inputs.
B. When counting up, count-down input must be high, when counting down, count-up input must be high.

1820-1216 3-BIT BINARY DECODER/DEMULTIPLEXER

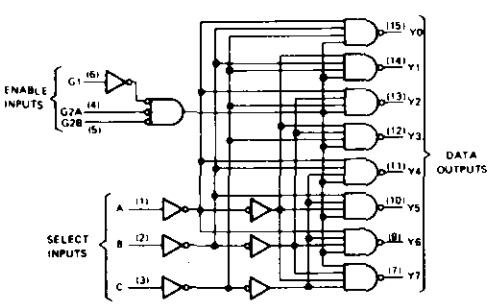

FUNCTION TABLE

INPUTS					OUTPUTS							
ENABLE		SELECT										
G1	G2*	C	B	A	Y0	Y1	Y2	Y3	Y4	Y5	Y6	Y7
X	H	X	X	X	H	H	H	H	H	H	H	H
L	X	X	X	X	H	H	H	H	H	H	H	H
H	L	L	L	L	L	H	H	H	H	H	H	H
H	L	L	L	H	H	L	H	H	H	H	H	H
H	L	L	H	L	H	H	L	H	H	H	H	H
H	L	L	H	H	H	H	H	L	H	H	H	H
H	L	H	L	L	H	H	H	H	L	H	H	H
H	L	H	L	H	H	H	H	H	H	L	H	H
H	L	H	H	L	H	H	H	H	H	H	L	H
H	L	H	H	H	H	H	H	H	H	H	H	L

*G2 = G2A + G2B
H = high level, L = low level, X = irrelevant

1820-1277 SYNCHRONOUS 4-BIT DECADE UP/DOWN COUNTERS (DUAL CLOCK WITH CLEAR)

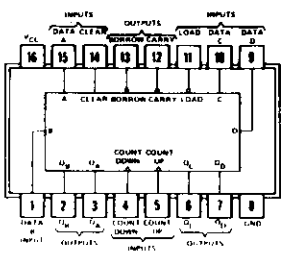

Illustrated below is the following sequence:

1. Clear outputs to zero.
2. Load (preset) to BCD seven.
3. Count up to eight, nine, carry, zero, one, and two.
4. Count down to one, zero, borrow, nine, eight, and seven.

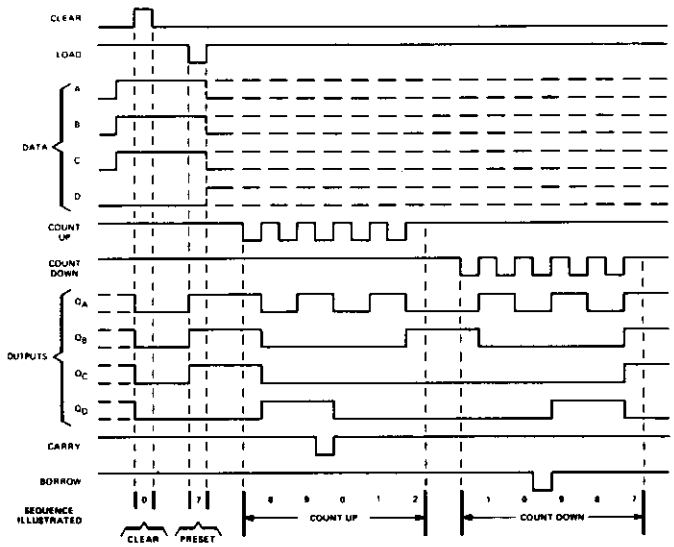

NOTES: A. Clear overrides load, data, and count inputs.
B. When counting up, count-down input must be high; when counting down, count-up input must be high.

1820-1423 DUAL RETRIGGERABLE MONOSTABLE MULTIVIBRATORS WITH CLEAR

FUNCTION TABLE

INPUTS			OUTPUTS	
CLEAR	A	B	Q	$\bar{Q}$
L	X	X	L	H
X	H	X	L	H
X	X	L	L	H
H	L	↑	⎍	⎏
H	↓	H	⎍	⎏
↑	L	H	⎍	⎏

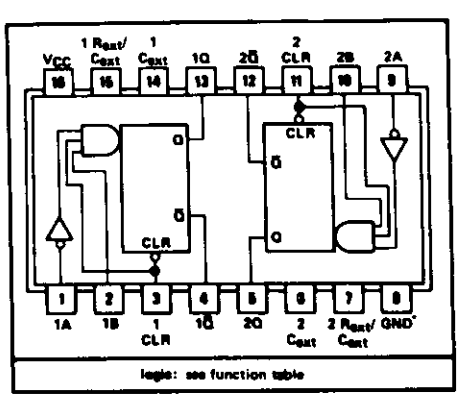

1820-1454 SYNCHRONOUS DECADE UP/DOWN COUNTER

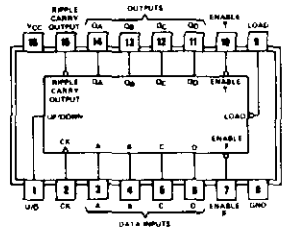

typical load, count, and inhibit sequences

Illustrated below is the following sequence.

1. Load (preset) to BCD seven
2. Count up to eight, nine (maximum), zero, one, and two
3. Inhibit
4. Count down to one, zero (minimum), nine, eight, and seven

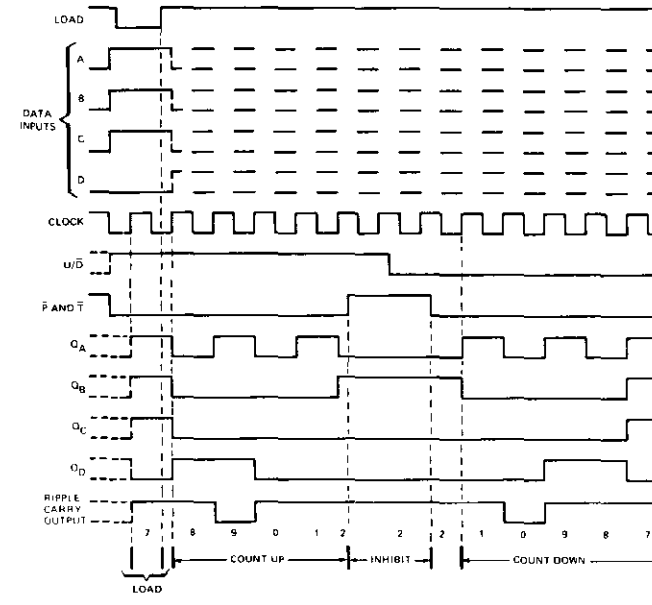

1820-1470 QUAD 2 TO 1-LINE DATA SELECTORS/MULTIPLEXERS

Inputs				Output
Strobe	Select	A	B	Y
H	X	X	X	L
L	L	L	X	L
L	L	H	X	H
L	H	X	L	L
L	H	X	H	H

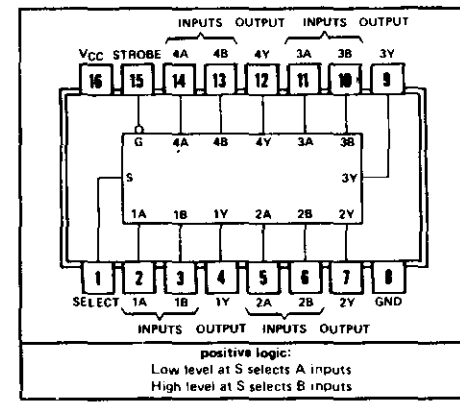

1820-1508 DECADE COUNTER/DIVIDER WITH 10 DECODED OUTPUTS

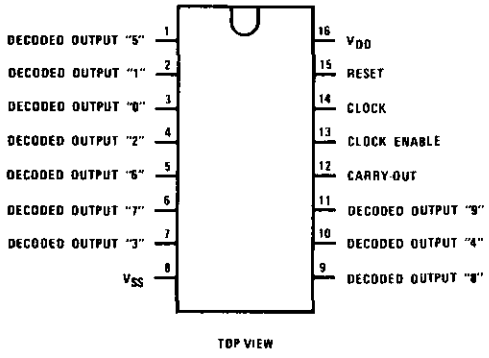

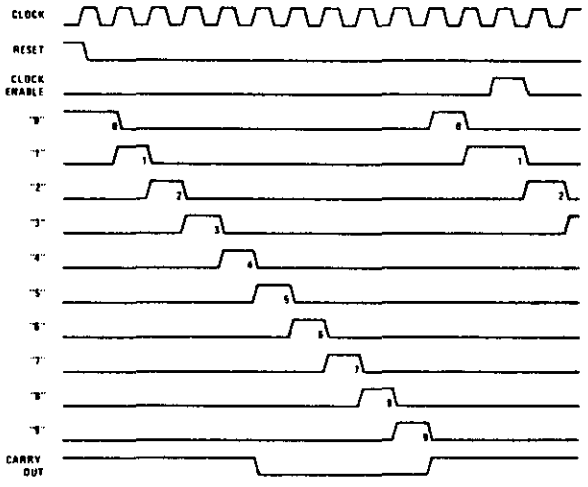

1820-1546 DUAL 4 TO 1-LINE ANALOG MULTIPLEXERS

Inputs			Channel
INH	S1	S0	turned on
H	X	X	None
L	L	L	0
L	L	H	1
L	H	L	2
L	H	H	3

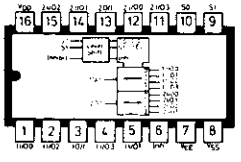

1820-1964 DUAL JK FLIP-FLOP

TRUTH TABLE

INPUTS						OUTPUTS*	
C†	J	K	S	R	Q_n‡	Q_{n+1}	$\overline{Q_{n+1}}$
↑	1	X	0	0	0	1	0
↑	X	0	0	0	1	1	0
↑	0	X	0	0	0	0	1
↑	X	1	0	0	1	0	1
↓	X	X	0	0	X	Q_n	$\overline{Q_n}$
X	X	X	1	0	X	1	0
X	X	X	0	1	X	0	1
X	X	X	1	1	X	1	1

No Change

X = Don't Care
† = Level Change
‡ = Present State
* = Next State

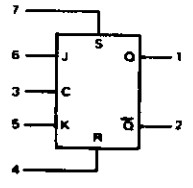

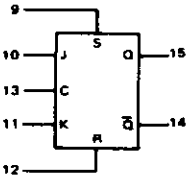

V_{DD} = Pin 16
V_{SS} = Pin 8

1820-2014 HEX INVERTER

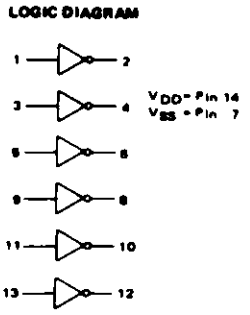

1826-0501 TRIPLE 2 TO 1-LINE ANALOG MULTIPLEXER

Inputs		Channel
INH	S	turned on
H	X	None
L	L	0
L	H	1

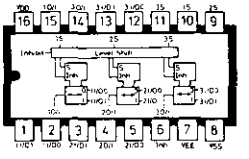

1826-0876 3 1/2DIGIT A/D CONVERTER

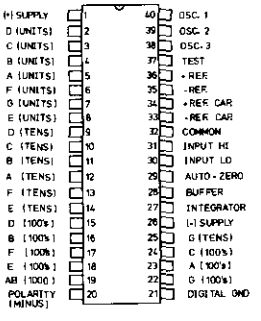

1826-0923 SHAPER/VERNIER IC

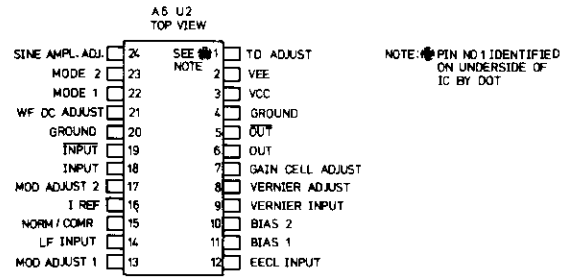

1826-0955 TRIANGLE/SLOPE GENERATOR IC

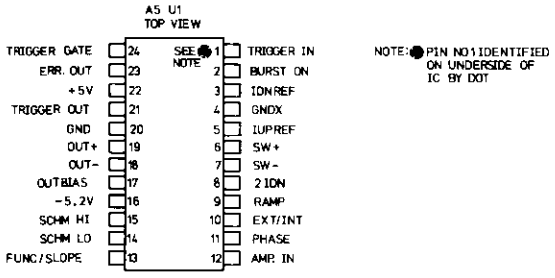

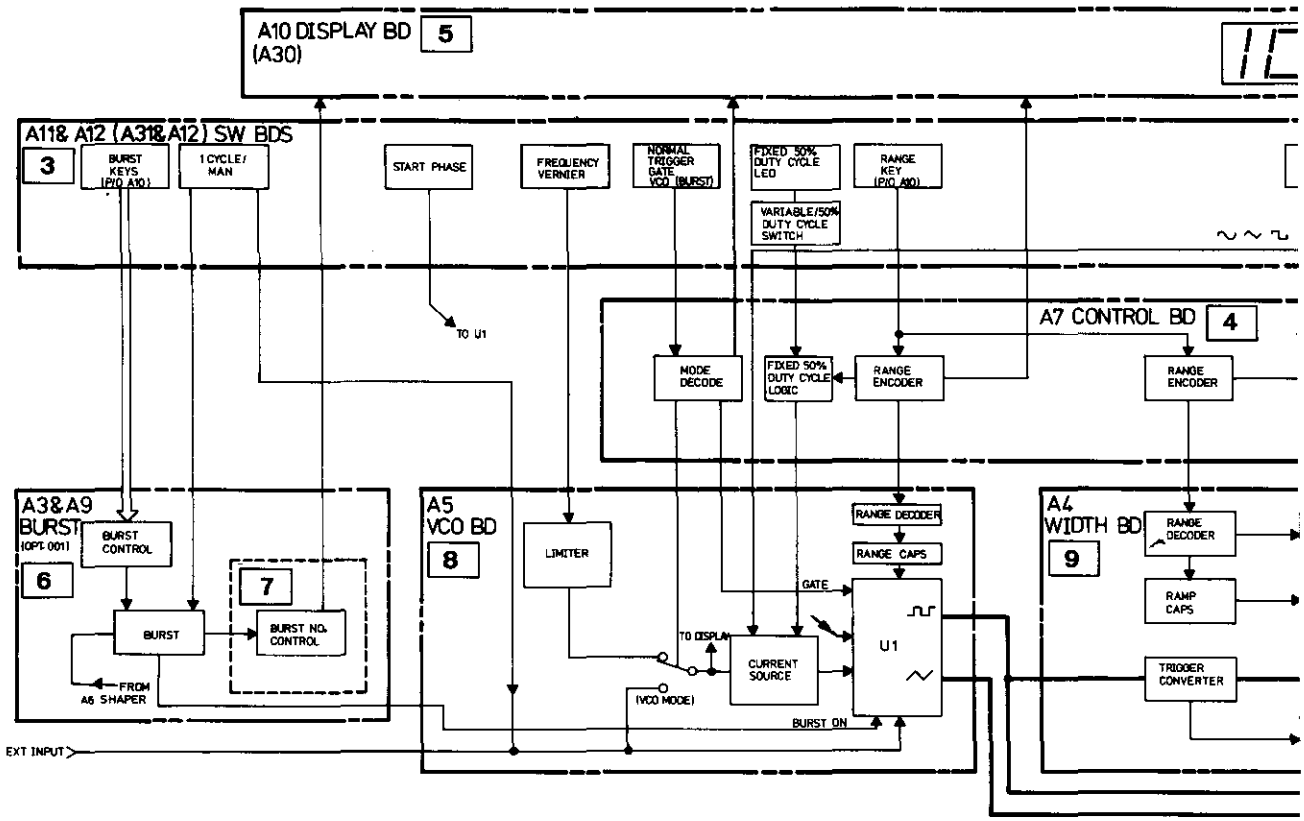

NOTE: BOARD NUMBERS IN BRACKETS
eg:(A30) INDICATE DIFFERENCES
FOR OPTION 001 (BURST) INSTRUMENTS.
NUMBERS WITHIN RECTANGLES eg. 6
ARE SCHEMATIC IDENTIFIERS

Figure 8–1–1. 8111A Block Diagram, Option 001 (Burst) Details Included

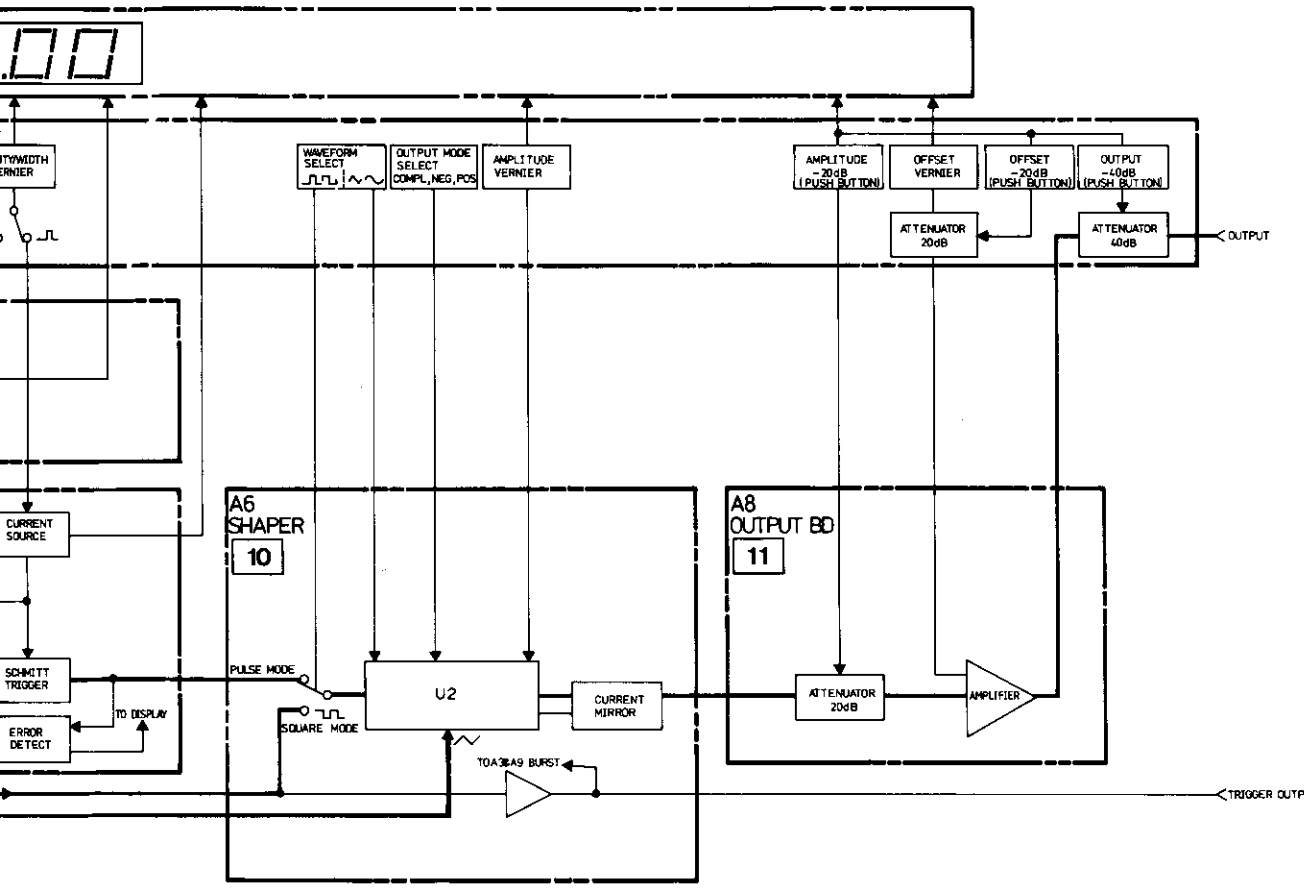
WAVEFORM SELECT
OUTPUT MODE SELECT COMPL, NEG, POS
AMPLITUDE VERNIER
AMPLITUDE -20dB (PUSH BUTTON)
OFFSET VERNIER
OFFSET -20dB (PUSH BUTTON)
OUTPUT -40dB (PUSH BUTTON)
ATTENUATOR 20dB
ATTENUATOR 40dB
OUTPUT
CURRENT SOURCE
SCHMITT TRIGGER
ERROR DETECT
TO DISPLAY
A6 SHAPER
10
PULSE MODE
SQUARE MODE
U2
CURRENT MIRROR
TO A3 & A9 BURST
A8 OUTPUT BD
11
ATTENUATOR 20dB
AMPLIFIER
TRIGGER OUTPUT

SERVICE BLOCK 1
PROBLEM AREA IDENTIFICATION

General

The purpose of this Service Block is to present a brief overview of the instrument circuits operation which, when combined with the Troubleshooting Tree (Figure 8–1–3), will assist in quickly identifying which Service Block(s) should be referred to. Once the actual board or circuit at fault has been identified, reference to the appropriate Service Block will provide detailed circuit operational theory and comprehensive trouble-shooting data. Details of the overall 811A circuits operation and the function of individual boards follows, reference should also be made as necessary to Figure 8–1–1 and the condensed block diagram – Figure 8–1–2. Where possible, the board descriptions are given in the same order as they appear in the two block diagrams i.e. in their logical priority.

Board/Signal Flow Description (Standard 8111A)

In all operating and waveform modes except External Trigger/Pulse, board A5 (VCO) functions as a rate generator with the rate (or frequency) being determined either by front panel settings or by an externally applied control voltage. For the one exception stated, A5 serves only as a Schmitt trigger to ensure that the incoming trigger signal is compatible with level shifter of A6 (Shaper) and the trigger converter circuit of A4 (Width).

Two output signals are produced by A5 U1 – triangular and square waveforms, the triangular waveform is input to A6 (Shaper) where it is further processed by A6 U2 to form a sinusoidal function if necessary and also given the required ("front panel") output mode and amplitude settings. If a squarewave is required then the "square output" from A5 U1 is utilized and processed by A6 U2. In pulse mode, the "square output" from A5 U1 is input to A4, given the required width characteristics (determined by front panel settings) and then output to A6 where it is processed as necessary. In all cases, the output from A6 is input to A8 (Output) for offset control and amplitude, output and offset attenuation.

A7 (Control) serves basically as an interface between A11, A12, A5 and A4. A3, A9, A6 and A8 interface directly with the front panel controls and A11, A12.

Parameter and error display is by board A10 with parameter display being via an A–D converter (analogue voltages derived from vernier control settings) and application of appropriate scaling factors via A12U12 depending on the chosen parameter.

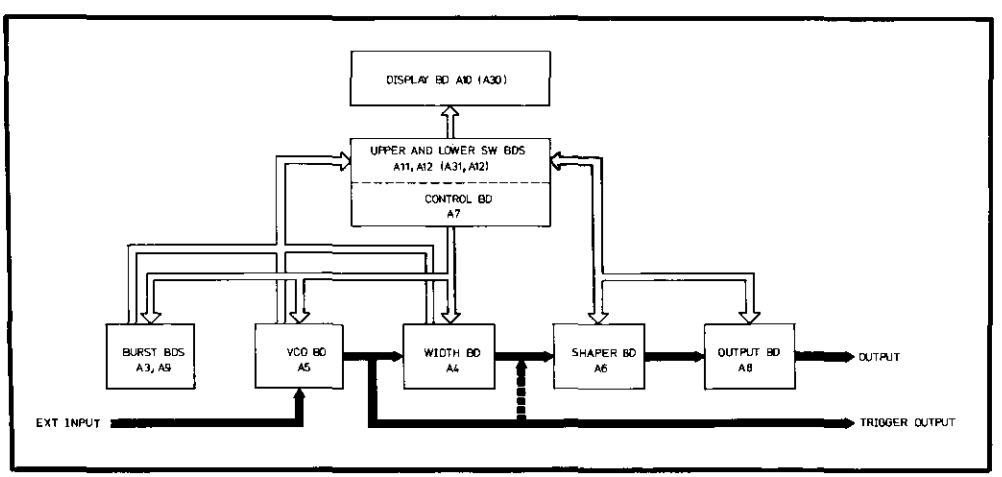

Figure 8–1–2. 8111A Condensed Block Diagram

Differences for Option 001 - Burst instruments

In Option 001 (Burst) instruments a trigger signal, either externally generated or via the Manual/1 Cycle switch, is required to initially activate A5U1. It is then maintained active by a signal (BURST ON) from A3.
The operating frequency and all other settings are made as for the standard 8111A, (via front panel settings and A11, A12 and A7 Control). The output is disabled by the BURST ON signal going low. The burst number, set by the Burst rocker switches, keeps the signal active high until the required output count is reached, it is also used by A9 to control the display value of A10.

TROUBLESHOOTING

The Troubleshooting Tree, Figure 8–1–3, should be referred to when necessary since it shows the connection between possible faults and related boards. While it will be found to be correct for all the basic fault conditions or symptoms, it cannot cover all possible situations.

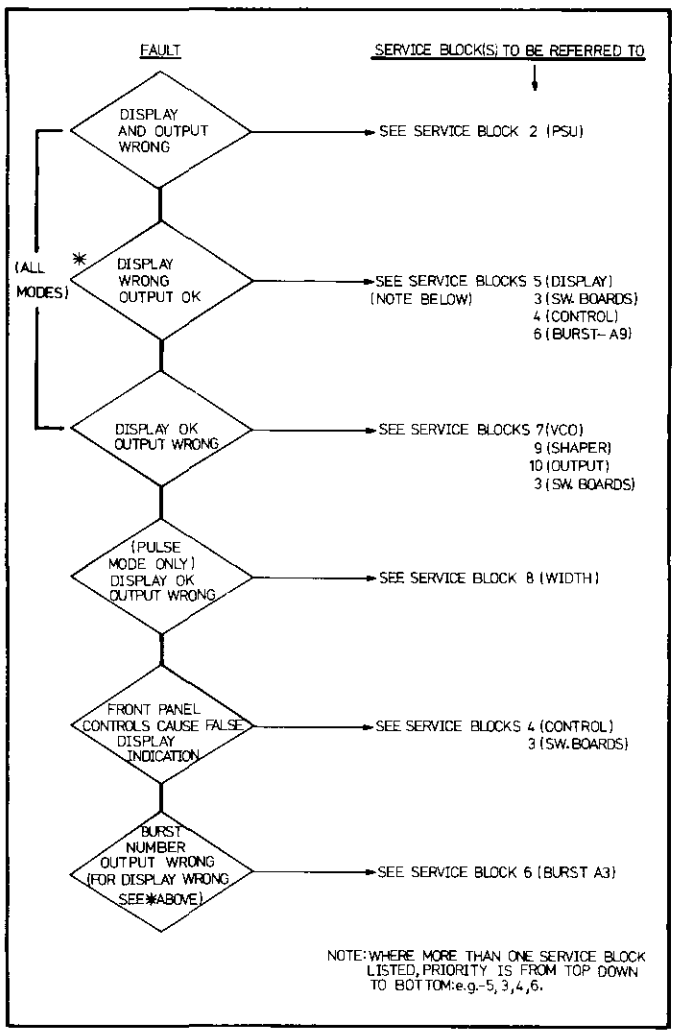

Figure 8–1–3. Troubleshooting Tree

A1 BD AY MOTHERBOARD 08111-66501 STANDARD
A21 " " " 08111-66521 OPTION 001

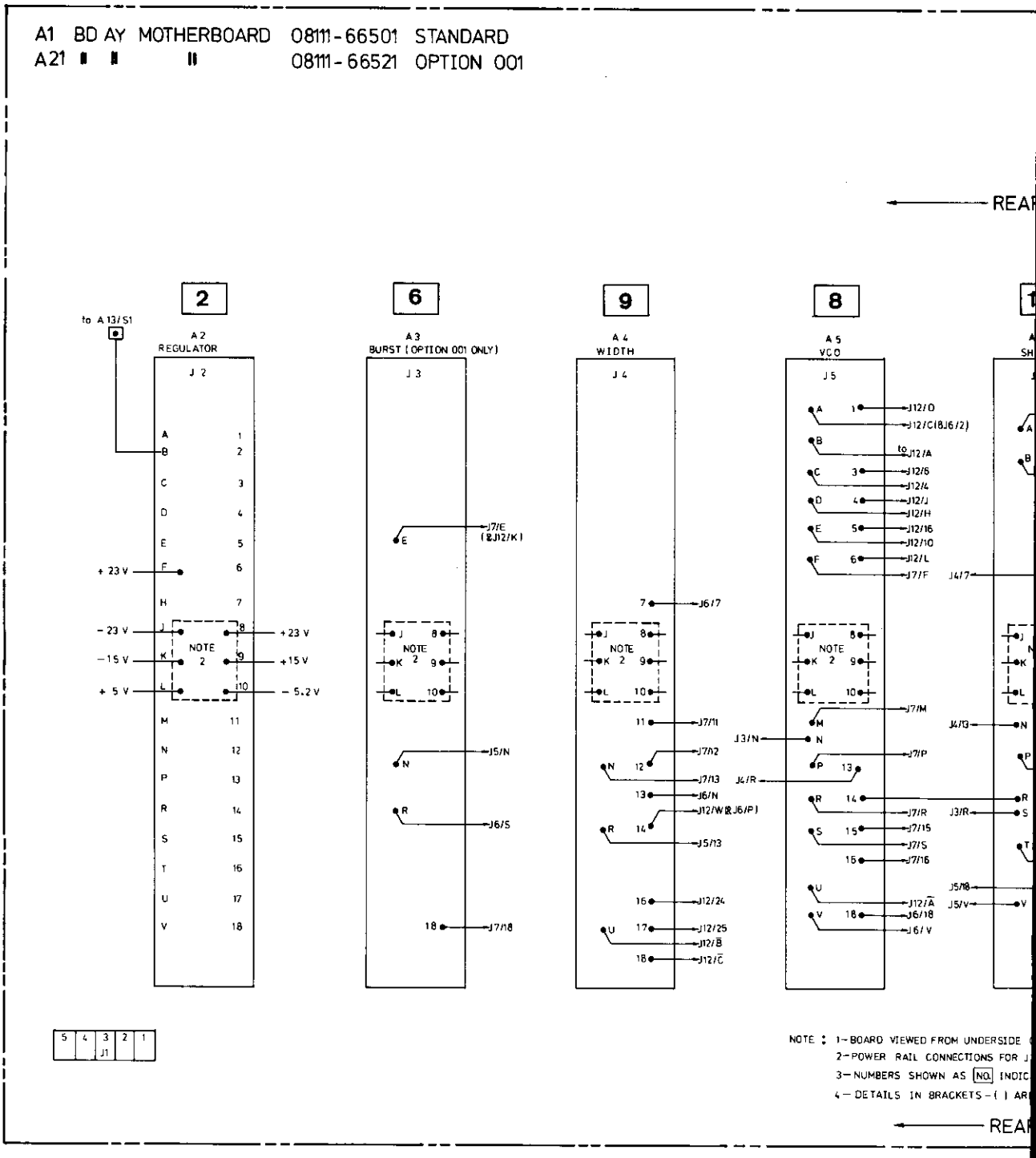

1

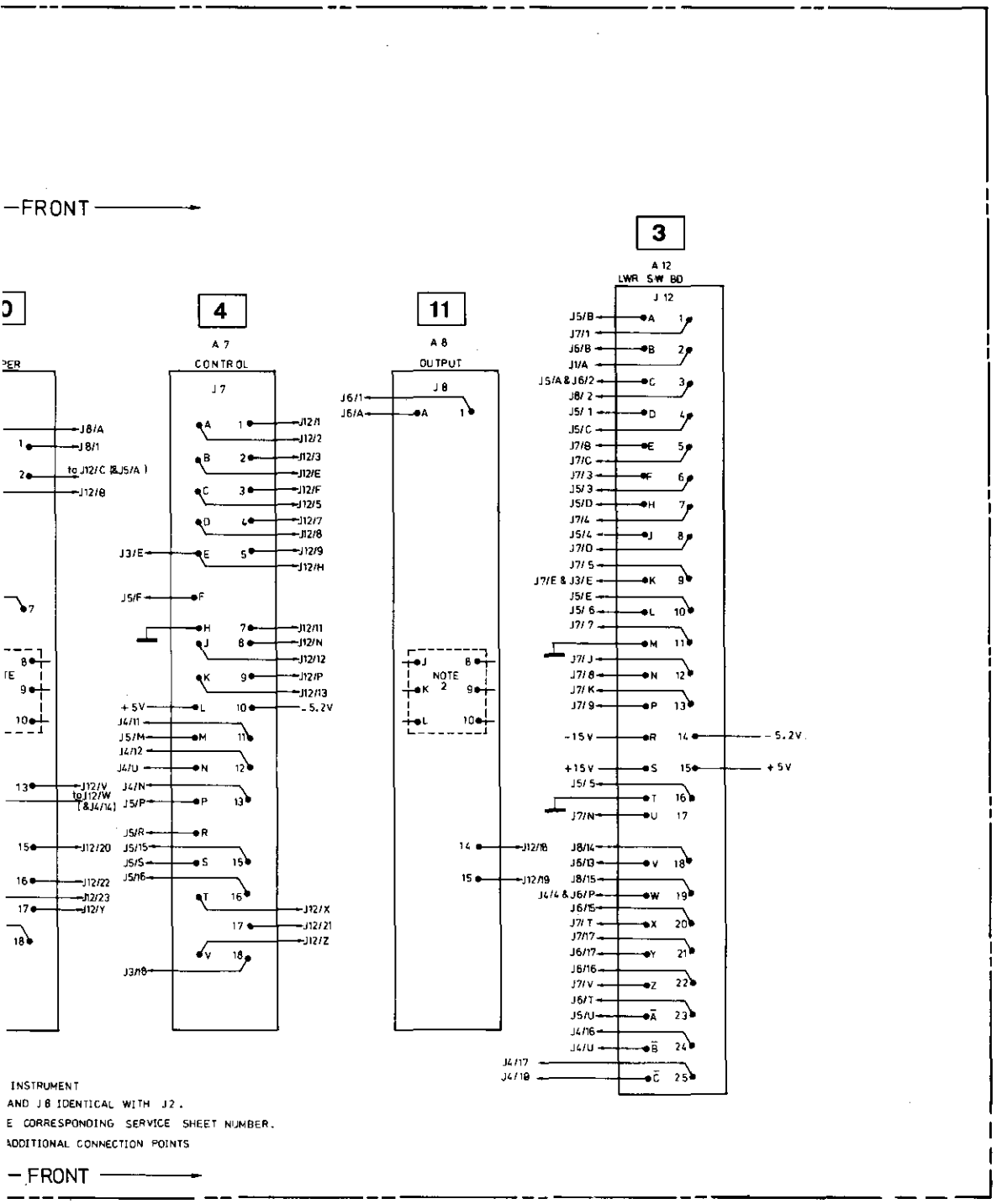
FRONT
3
A 12
LWR SW BD
J 12
4
A 7
CONTROL
J 7
11
A 8
OUTPUT
J 8
NOTE 2
J8/A
J8/1
to J12/C (&J5/A)
J12/8
J12/1
J12/2
J12/3
J12/E
J12/F
J12/5
J12/7
J12/8
J12/9
J12/H
J3/E
J5/F
J12/11
J12/N
J12/12
J12/P
J12/13
+5V
-5.2V
J4/11
J5/M
J4/12
J4/U
J4/N
J5/P
J12/V
to J12/W
[&J4/14]
J5/R
J5/15
J5/S
J5/16
J12/20
J12/22
J12/23
J12/Y
J12/X
J12/21
J12/Z
J3/18
J6/1
J6/A
J12/18
J12/19
J5/B
J7/1
J6/B
J1/A
J5/A & J6/2
J8/2
J5/1
J5/C
J7/8
J7/C
J7/3
J5/3
J5/D
J7/4
J5/4
J7/D
J7/5
J7/E & J3/E
J5/E
J5/6
J7/7
J7/J
J7/8
J7/K
J7/9
-15V
+15V
J5/5
J7/N
J8/14
J6/13
J8/15
J4/4 & J6/P
J6/15
J7/T
J7/17
J6/17
J6/16
J7/V
J6/T
J5/U
J4/16
J4/U
J4/17
J4/18
-5.2V
+5V
INSTRUMENT
AND J8 IDENTICAL WITH J2.
E CORRESPONDING SERVICE SHEET NUMBER.
ADDITIONAL CONNECTION POINTS
FRONT

SERVICE BLOCK 2
POWER SUPPLY A1, A2, A13 [2]

THEORY OF OPERATION

General

The 8111A power supply comprises basically a step down transformer, bridge rectifiers, smoothing capacitors and various regulators. The components are distributed over boards – A1, A2 and A13.

The instrument may be operated from 100/120/220 or 240 Vrms single phase supplies. Two line voltage selector switches, A2, S2 and S3, are provided to enable the appropriate local voltage to be used. Operation of these switches causes the correct combination of transformer T1 primary windings to be selected so that the required secondary voltages are produced. These voltages are then rectified, smoothed and regulated to produce the following regulated supplies:

± 23 V, ± 15 V, + 5 V, – 5.2 V

The unregulated ± 23 V rails are used to generate auxiliary ± 15 V supplies and regulated ± 23 V and ± 15 V. The auxiliary supplies (± 15 VR) are derived via zener diodes and are the power source for PSU (Power Supply Unit) regulators and protection circuits. In the event of a PSU shut-down, due to a short circuit for example, the auxiliary supplies ensure that the protection circuits maintain their integrity.

NOTE: References to components in the following paragraphs are always for board A2 unless otherwise indicated.

Reference Voltage

All voltage regulators in this PSU use the same reference voltage (–5.2 V) which is generated by zener diode VR1 and a potential divider.

At instrument switch on the zener diode supply current for the –5.2 V supply comes from the rectified transformer output via CR10, R3, Q2. During normal operation the zener current comes from the regulated –15 V supply via CR9, CR10 is then nonconducting. R2/C5 provides a slow ramp-like rise of the reference voltage and therefore also of the regulated supplies.

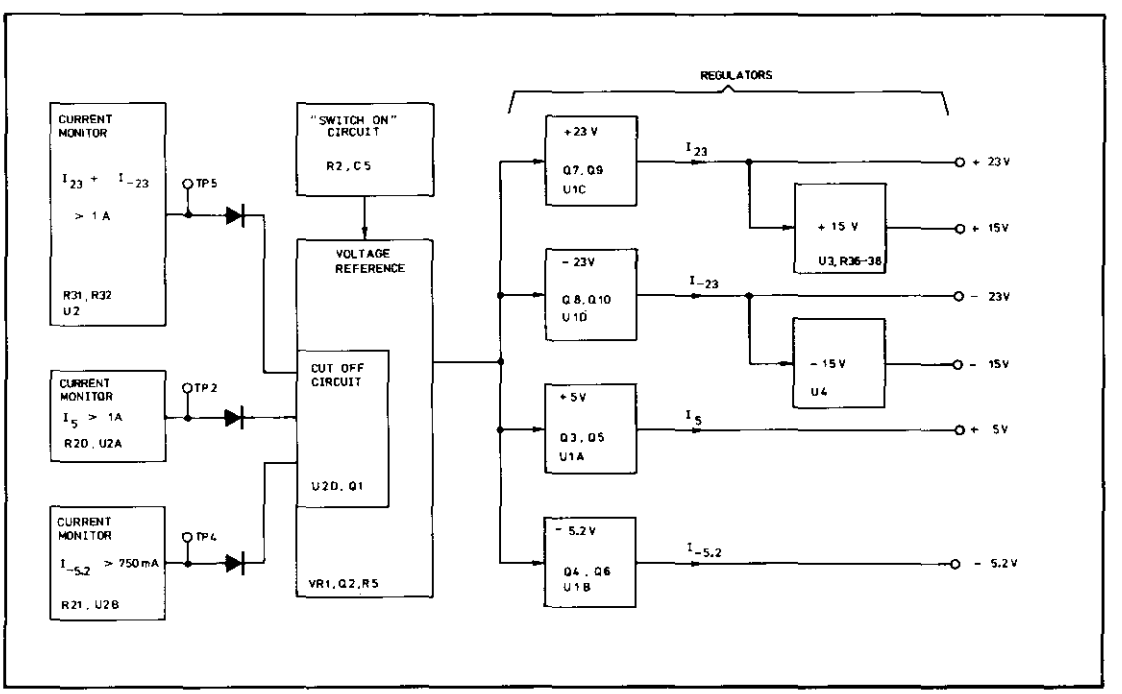

Figure 8–2–1. Simplified Voltage/Current Regulating/Limiting Circuits

± 23 V Supplies

A simplified functional diagram illustrating the operating principle of a positive voltage regulator is shown in Figure 8–2–2. The circuit functions as an inverting amplifier with a high current output. The operating principle of the negative voltage regulator is shown in Figure 8–2–3. The error amplifier compares Vreg with Vref and drives the regulator transistor to zero difference. Excessive output current is detected by R31 and R32 as shown in Figure 8–2–5. The output of the overload amplifier U2C goes high if the voltage drops over R31 and R32 exceed a set level.

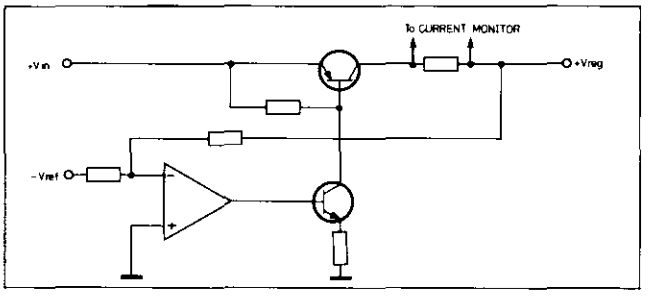

Figure 8–2–2. Principle of Fixed Positive Voltage Regulator

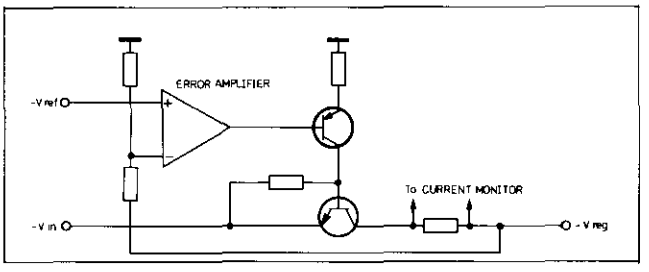

Figure 8–2–3. Principle of Fixed Negative Voltage Regulator

± 15 V Supplies

The ± 15 V supplies are derived from the regulated ± 23 V supplies by using "standard 3 pin" voltage regulators. Excessive current is detected by R31 and R32.

± 5 V/–5.2 V Supplies

The voltage regulator operating principles are the same as those which have been described in the previous paragraphs. Principles of excessive current detection of the +5 V regulator is shown in Figure 8–2–4. For the –5.2 V regulator the same principle applies with changed polaritites.

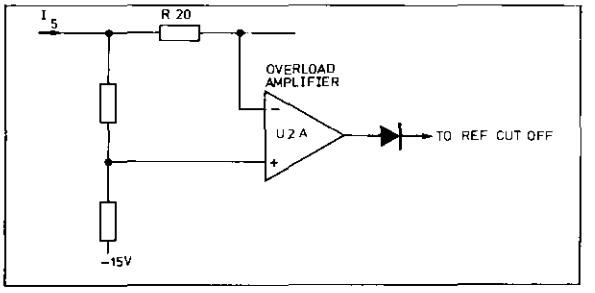

Figure 8–2–4. Current Monitor

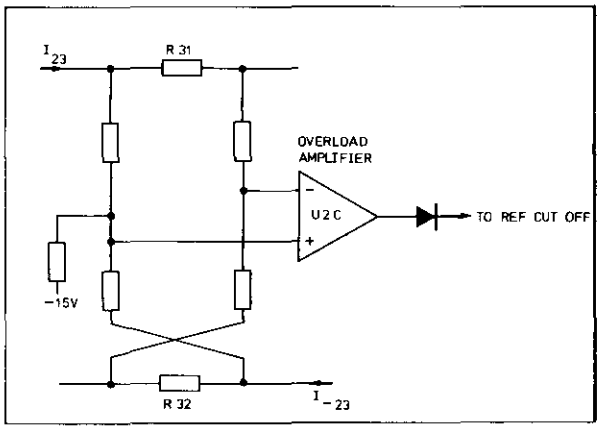

Figure 8–2–5. Summing Current Monitor

Switch-off Circuit

An overload signal from one of the current monitoring amplifiers will cause C6 to charge up via R8.
When the threshold level of the Schmitt trigger U2D, R9, R10 is reached, its negative going output turns Q1 on, the current for Vref is turned off, so Vref goes to zero causing all regulated voltages to be reduced to zero. After a time (determined by the time constant of R7 and C6) the threshold level of the Schmitt trigger (now negative) is reached, Q1 turns off, C5 begins to charge up, thus ensuring a slow ramp-like rise of the reference voltage at R5. If the overload still exists, then the whole procedure is repeated continuously.

TROUBLESHOOTING

Two basic faults can occur in the PSU:

a. no voltage or over-voltage caused by a faulty supply.

b. excessive current consumption (due to a short circuit or faulty component) on one of the boards which is recognizable by all supplies being repeatedly switched on and off.

Faulty Supply

If one supply is at fault, troubleshoot it as necessary to locate the faulty or failed components.

Excessive Current

Note that an excessive current taken from only one supply will cause all supplies to be switched on and off repeatedly. A short circuit across one of the supplies will cause all voltage rails to be narrow pulsed, thus the 8111A display will remain dark (LEDs under-energized). Excessive current, but no short circuit causes wider pulses and the display may flash.

To determine which is the overloaded supply, measure at TP2, TP4 and TP5 and note which current monitor is active, (see Figure 8–2–6).

Having determined the overloaded supply, locate the faulty board by pulling out each in turn starting with the output amplifier and finishing with the complete front panel assembly.

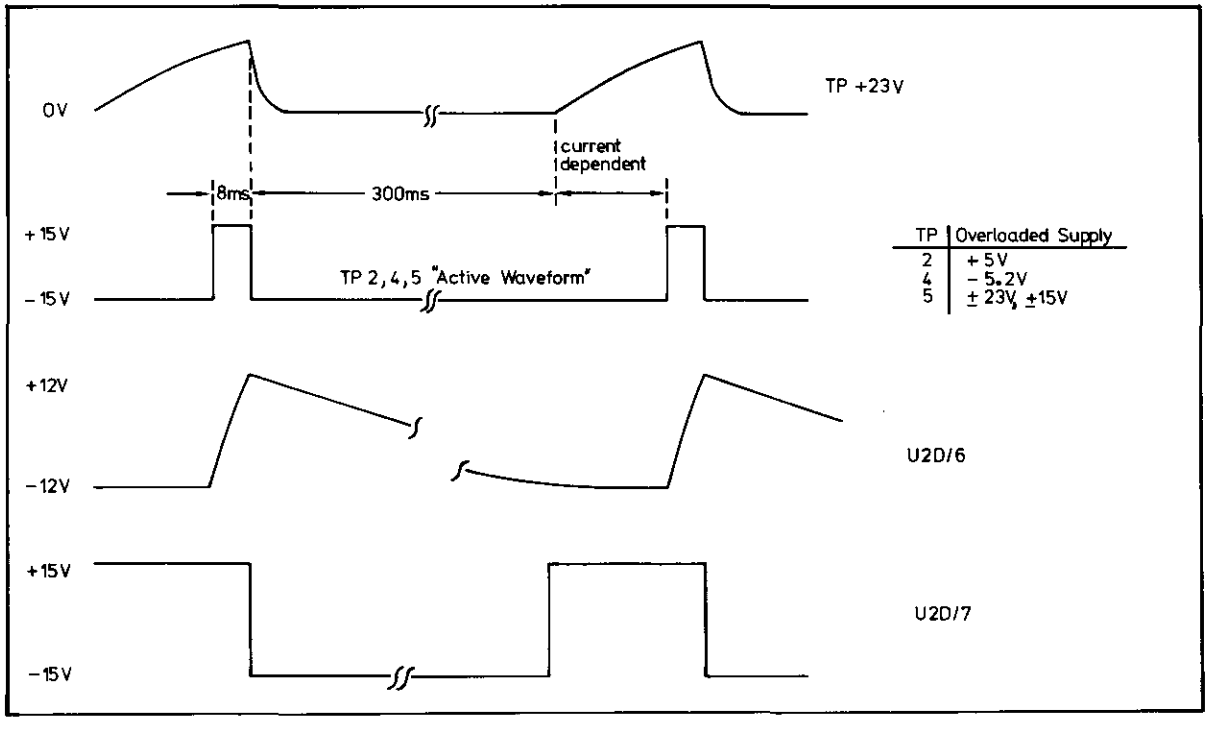

TP	Overloaded Supply
2	+5V
4	-5.2V
5	±23V, ±15V

Figure 8–2–6. Fault Condition Output Waveforms

A13 BD AY FUSE & SWITCH 08111-66513

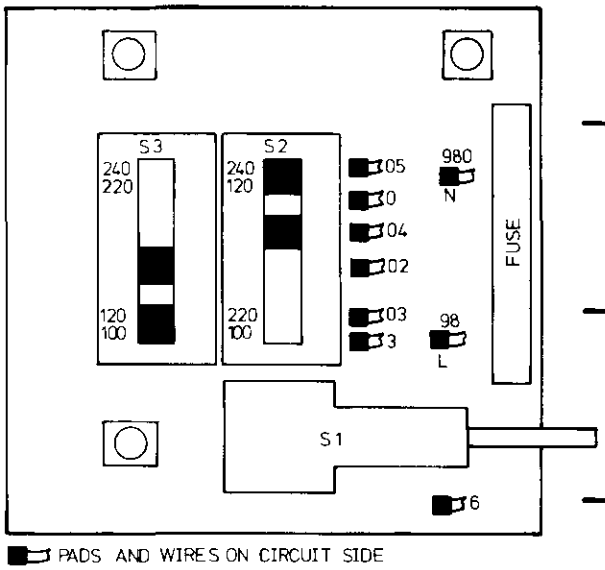

P/O A1 BD AY MOTHER 08111-66501

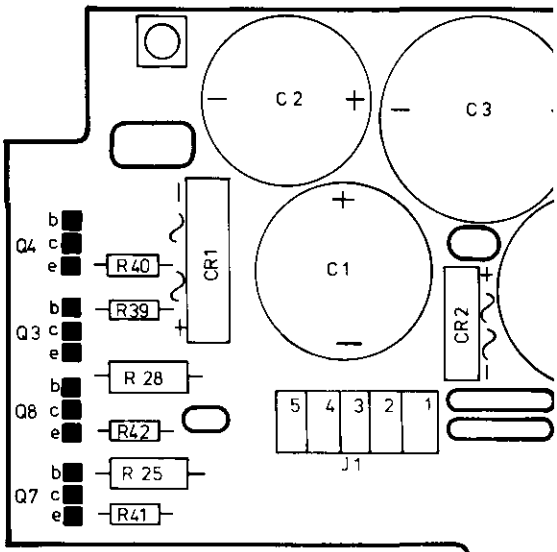

REF DESIG	GRID LOC
S1	B/C3
S2	B2
S3	B2

REF DESIG	GRID LOC	REF DESIG	GRID LOC
C1	G2	R39	E3
C2	F2	R40	E2
C3	G2	R41	E4
C4	H2	R42	E3
CR1	F2	Q3	E3
CR2	G3	Q4	E2
J1	G3	Q7	E4
R12	H4	Q8	E3
R13	H4		
R20	H5		
R21	H4		
R25	E3		
R28	E3		
R31	H5		
R32	H5		

2

D | E | F | G | H | I | J | K | L

513

P/O A1 BD AY MOTHER 08111-66501

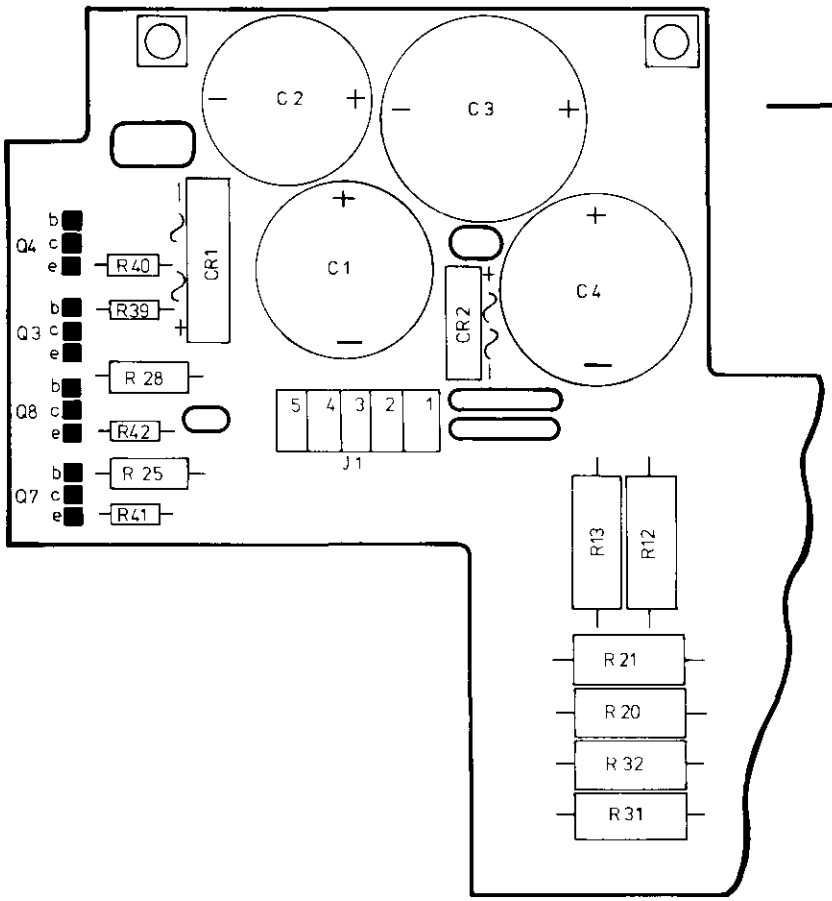

A2 BD AY REGULATOR 08111-

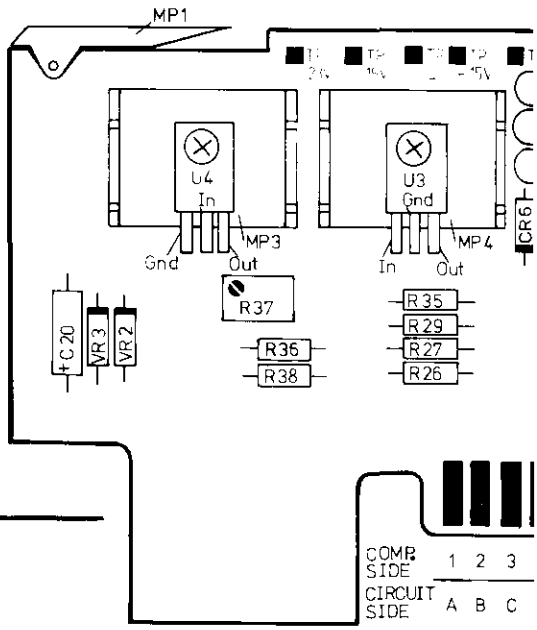

REF DESIG	GRID LOC	REF DESIG	GRID LOC
C1	G2	R39	E3
C2	F2	R40	E2
C3	G2	R41	E4
C4	H2	R42	E3
CR1	F2	Q3	E3
CR2	G3	Q4	E2
J1	G3	Q7	E4
R12	H4	Q8	E3
R13	H4		
R20	H5		
R21	H4		
R25	E3		
R28	E3		
R31	H5		
R32	H5		

REF DESIG	GRID LOC	REF DESIG	GRID LOC
C5	Q2	CR7	M2
C6	Q2	CR8	M2
C7	Q3	CR9	Q2
C9	O2	CR10	Q1
C11	M2	CR11	O2
C12	Q3	CR12	O2
C14	M1	CR13	O1
C15	P3	CR14	Q2
C17	M1	Q1	Q2
C18	P3	Q2	Q2
C20	J2	Q5	N2
CR3	O2	Q6	N2/3
CR4	O2	Q9	N2
CR5	N1	Q10	N2
CR6	M2	R1	P2

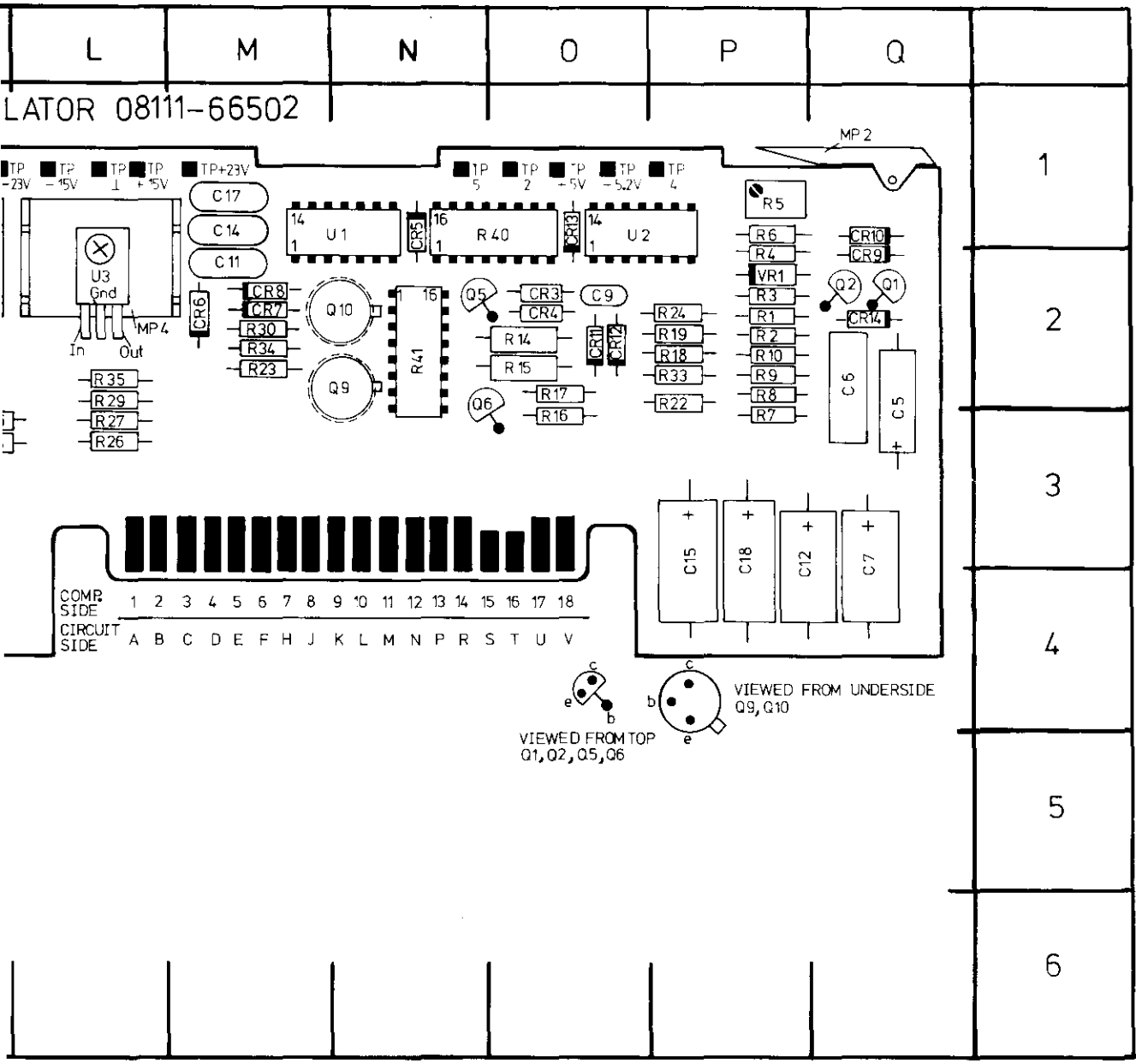

EF ESIG	GRID LOC	REF DESIG	GRID LOC	REF DESIG	GRID LOC	REF DESIG	GRID LOC	REF DESIG	GRID LOC
R7	M2	R2	P2	R22	P2	TP2	O1	VR2	P2
R8	M2	R3	P2	R23	M2	TP4	P1	VR3	J2
R9	Q2	R4	P2	R24	P2	TP5	M1		
R10	Q1	R5	P1	R26	L3	TP+5V	O1		
R11	O2	R6	P1	R27	L3	TP-5,2V	O1		
R12	O2	R7	P3	R29	L2	TPGND	L1		
R13	O1	R8	P2	R30	M2	TP-23V	L1		
R14	Q2	R9	P2	R33	P2	TP+23V	M1		
1	Q2	R10	P2	R34	M2	TP-15V	L1		
2	Q2	R14	O2	R35	L2	TP+15V	L1		
5	N2	R15	O2	R36	K2	U1	N1		
5	N2/3	R16	O2	R37	K2	U2	O1		
9	N2	R17	O2	R38	K2	U3	L2		
10	N2	R18	P2	R40	N1	U4	K2		
1	P2	R19	P2	R41	N2	VR1	P2		

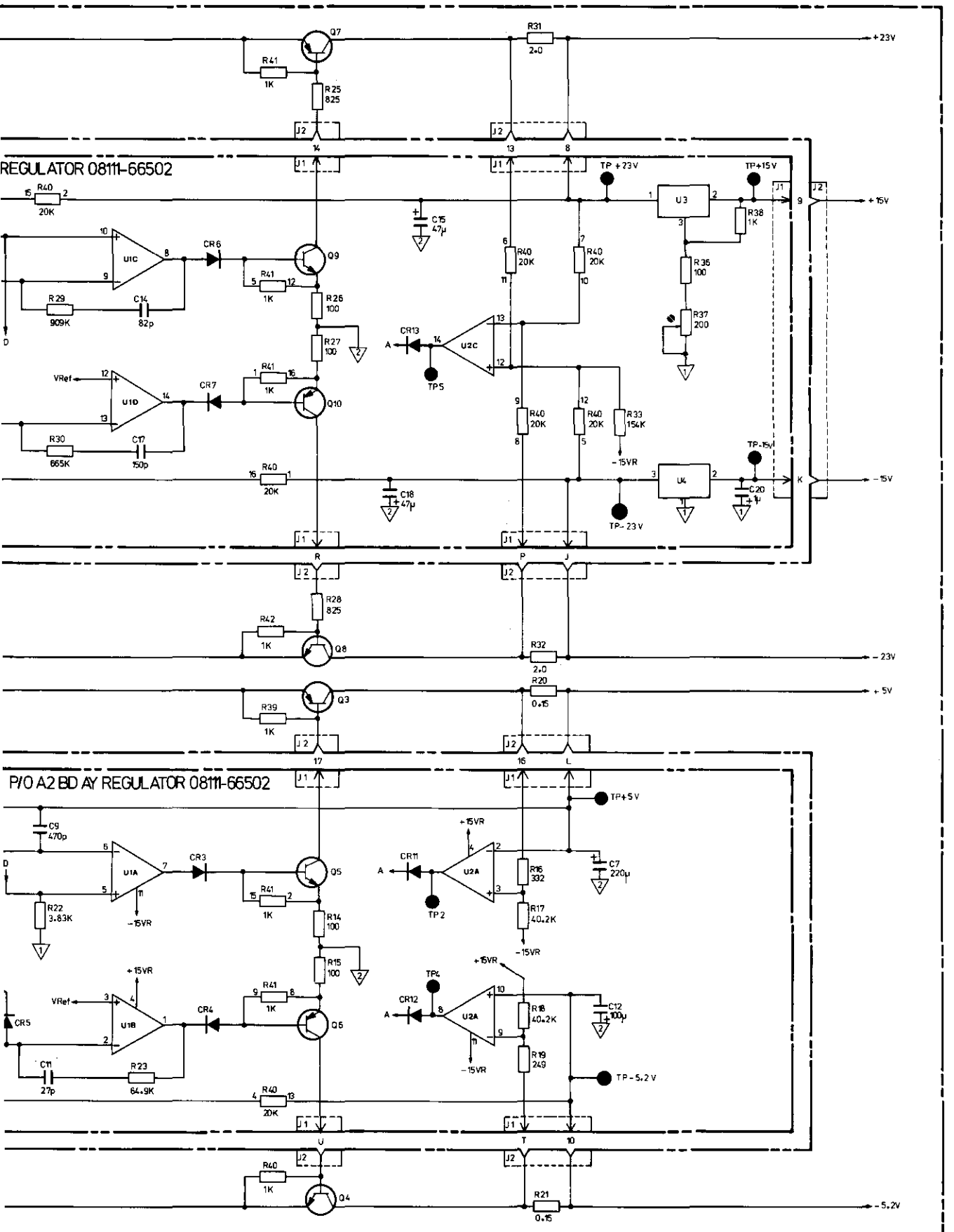

POWER SUPPLY A1, A2, A13 **2**

Y MOTHERBOARD 08111-66501 (STANDARD)
Y MOTHERBOARD 08111-66521 (OPTION 001)

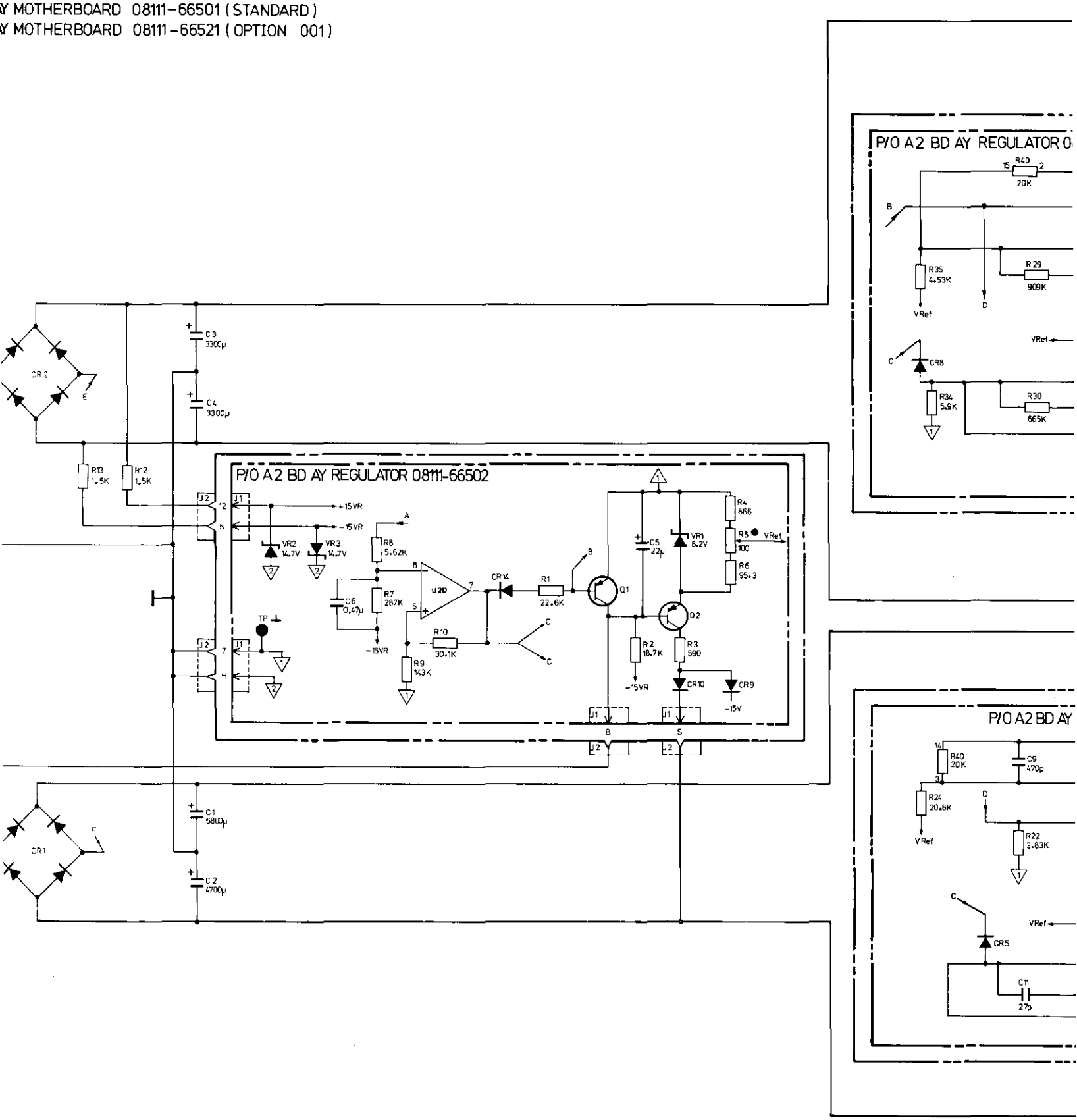

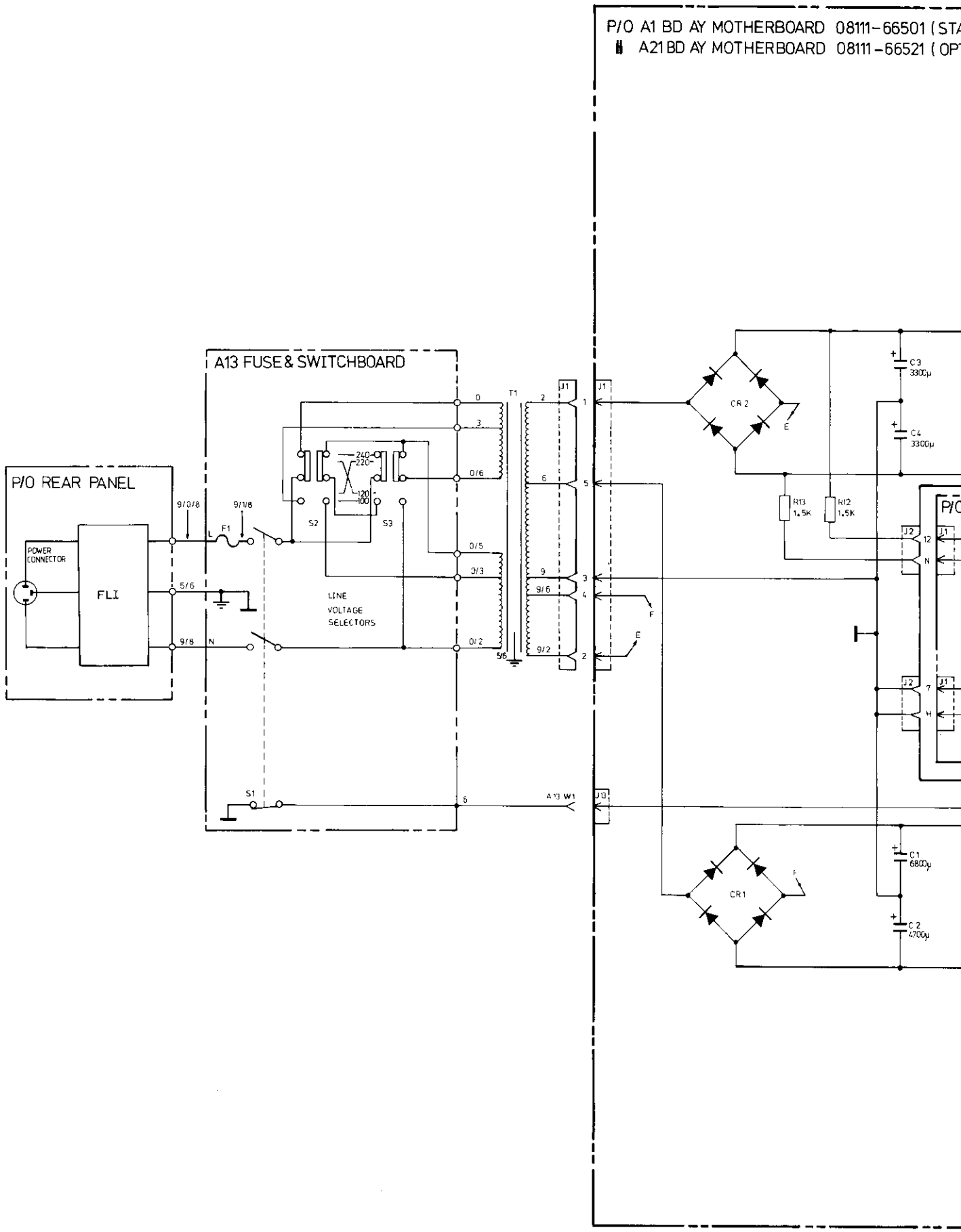
P/O A1 BD AY MOTHERBOARD 08111-66501 (STA
A21 BD AY MOTHERBOARD 08111-66521 (OPT
A13 FUSE & SWITCHBOARD
P/O REAR PANEL
POWER CONNECTOR
FLI
9/0/8
9/1/8
L
F1
5/6
9/8
N
S1
S2
S3
240
220
120
100
LINE VOLTAGE SELECTORS
0
3
0/6
0/5
0/3
0/2
6
A13 W1
T1
J1
9
9/6
9/2
5/6
CR 2
CR1
E
F
R13 1.5K
R12 1.5K
C3 3300μ
C4 3300μ
C1 6800μ
C2 4700μ
J2
12
7
H

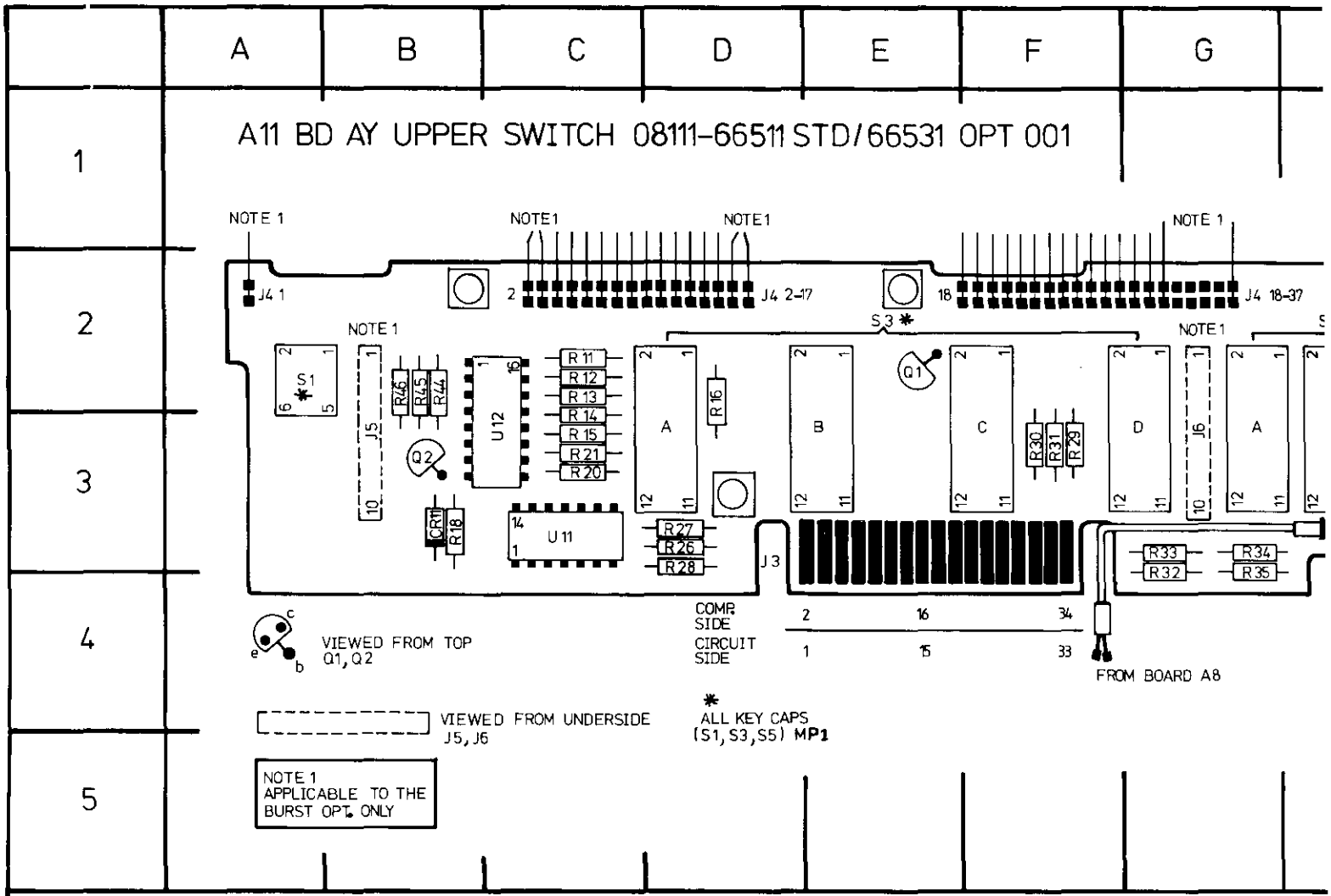

REF DESIG	GRID LOC	REF DESIG	GRID LOC
CR11	B3	R30	F3
Q1	E2	R31	F3
Q2	B3	R32	G4
R11	C2	R33	G3
R12	C2	R34	G3
R13	C2	R35	G4
R14	C3	R41	H3
R15	C3	R42	F3
R16	D2	R44	B2
R18	B3	R45	B2
R20	C3	R46	B2
R21	C3	S1	A2
R26	D3	S3	C/G3
R27	D3	S5	D/G3
R28	D3	U11	C3
R29	F3	U12	C3

3

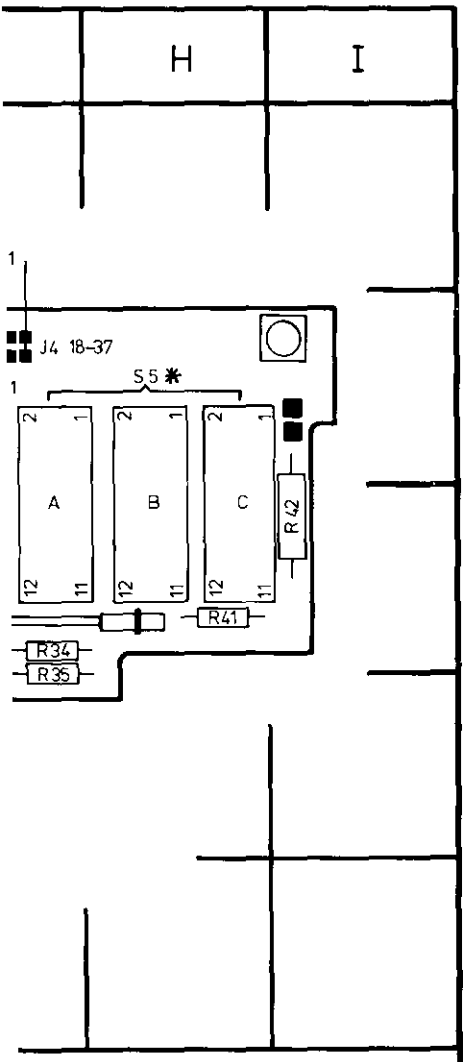

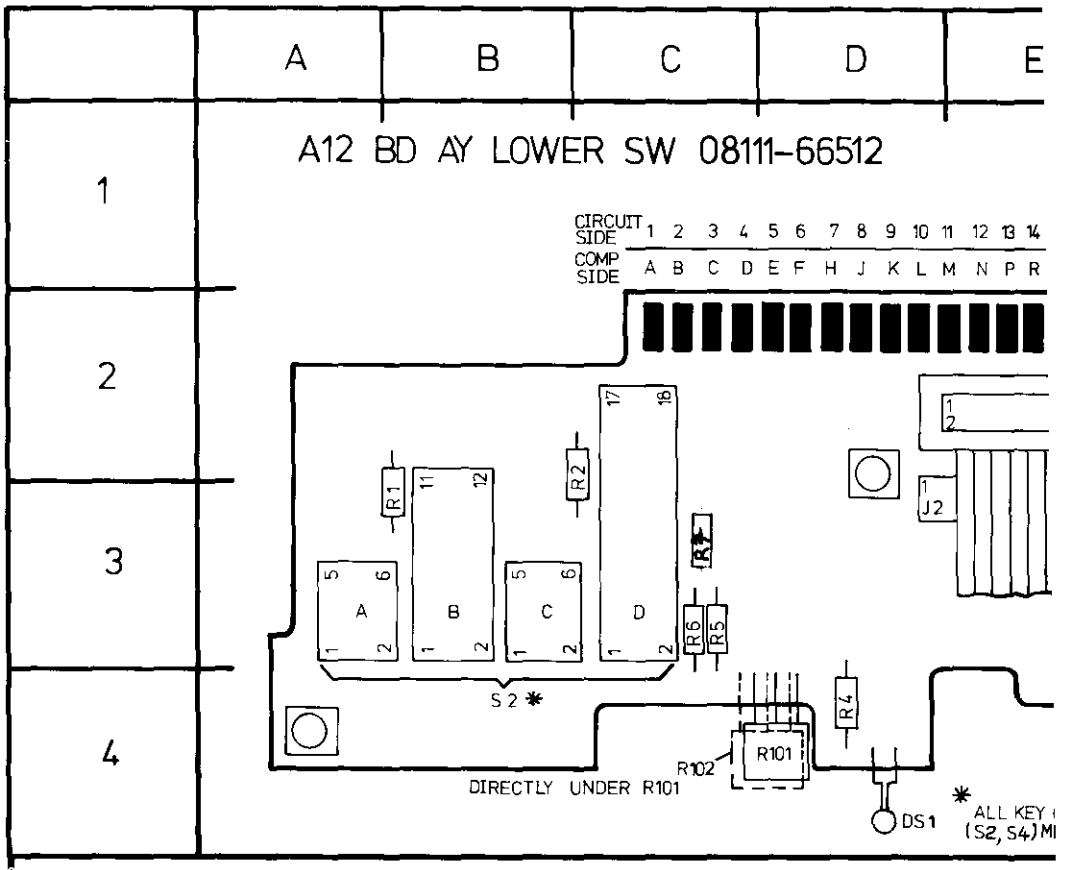

REF DESIG	GRID LOC
DS1	D4
J2	D/F2
R1	B3
R2	B3
R3	G3
R4	D4
R5	C3
R6	C3
R101	D4
R102	D4
R104	F4
S2	A/C3
S4	G/H3
R7	C3

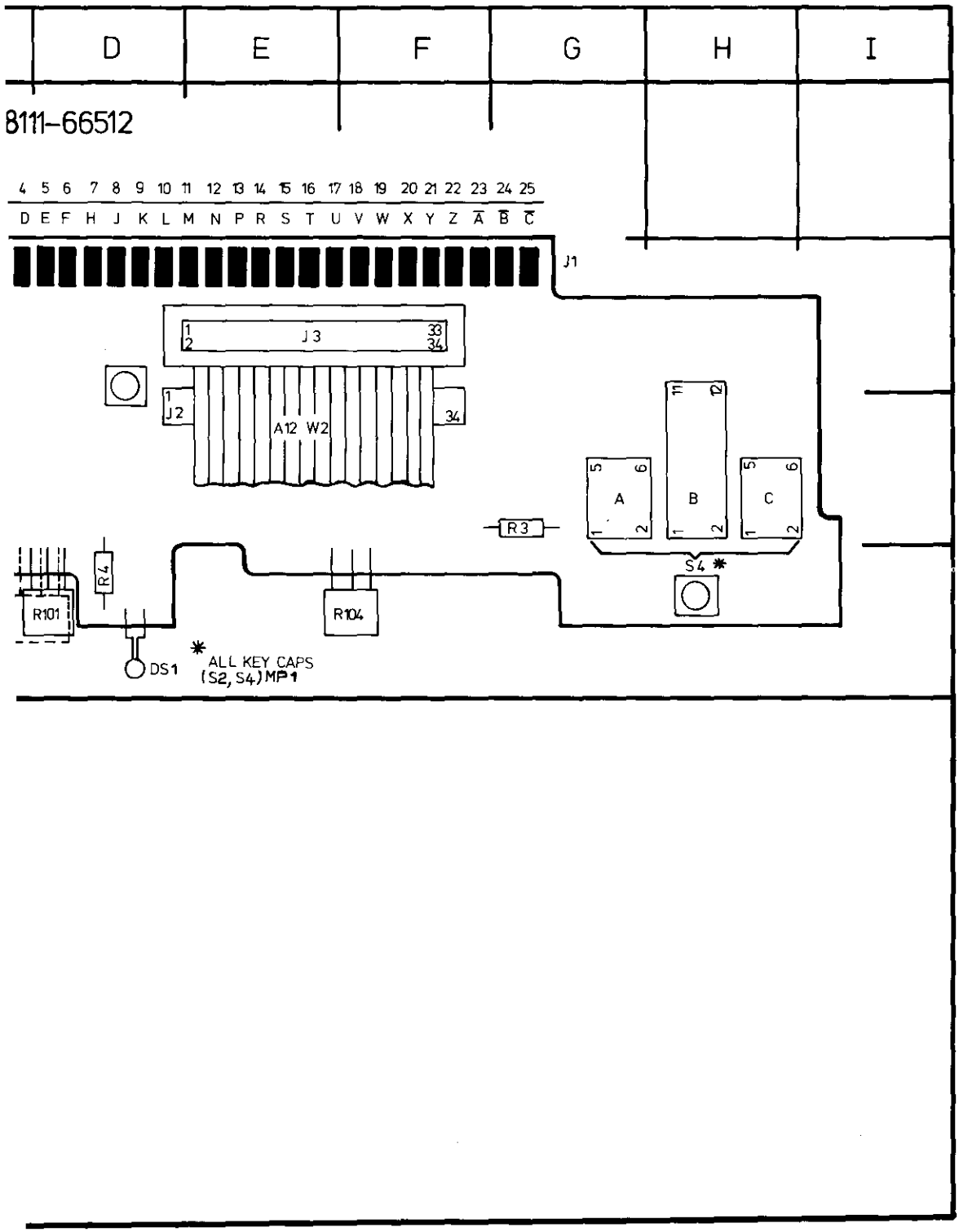
D
E
F
G
H
I
8111-66512
4 5 6 7 8 9 10 11 12 13 14 15 16 17 18 19 20 21 22 23 24 25
D E F H J K L M N P R S T U V W X Y Z A B C
J1
J3
1
2
33
34
J2
A12 W2
A
B
C
R3
S4 *
R4
R101
R104
DS1
* ALL KEY CAPS
(S2, S4) MP1

SERVICE BLOCK 3
SWITCH BOARDS A11 (A31), A12 3

THEORY OF OPERATION

The Switch boards contain the switches and interconnections required for selection of the appropriate circuit elements involved in the various 8111A operating modes and functions. An additional feature of A11 (A31) is that it includes the voltage reference, and parameter signal control circuitry for the Display board A–D converter. The reference selection and signal switching is achieved by multiplexer A11 U12 under the control of A11 U11.

TROUBLESHOOTING

NOTE: FRONT PANEL ASSEMBLY REMOVAL:
To troubleshoot either of the switch boards (or Display or Burst Number Control board) it is usually necessary to separate the complete Front Panel Assembly from the instrument frame and motherboard connector (J12) and reconnect it via an extender board. To remove the front Panel Assembly refer to Figure 3–1 to identify the securing screws to be removed. Access to the two upper screws is by removing MP24 – the plastic trim strip which can be levered out with the aid of a screwdriver.

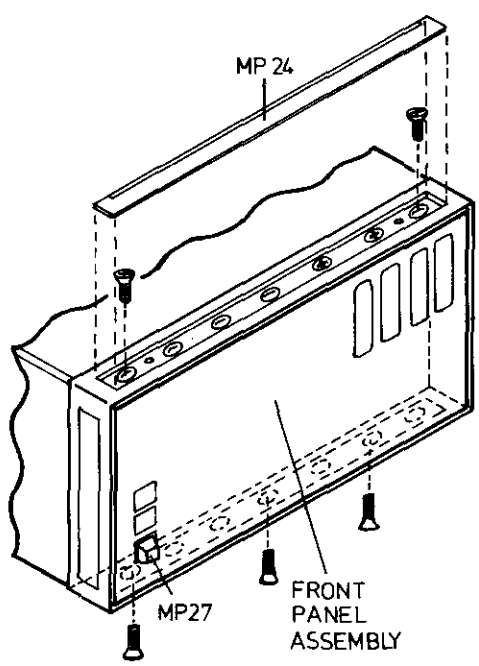

Figure 3–1.

After removal of the five screws the complete Front Panel assembly can be gently pushed forward out of the instrument frame away from the motherboard connector and over MP27.

NOTE: There are two interconnecting co-axial cables between the Front Panel assembly and boards A6 and A8, complete removal of the assembly from the instrument requires that they are disconnected at the two boards. The same applies (Option 001 instruments only) to the ribbon cable between A3 and A9, this should be disconnected at board A9.

REMEMBER to reconnect all of these cables when refitting the Front Panel Assembly in the instrument.

When refitting the assembly, MP27 should be guided through the appropriate front panel hole otherwise it can jam.

Since the switch boards comprise mostly passive components,no troubleshooting information is included for these. The only data is the following: If the displayed value is incorrect, then, as mentioned in Service Block 5 (Display), A11 U11 and A11 U12 may be faulty. The following truth table conditions should be checked and it should be noted that U11 pin 9 is high only when the Duty/Width and Frequency pushbuttons are both pressed.

Table 8–3–1. U11 Truth Table

Selected Waveform	U11 pin 8
⊓ ∿ ∿	L
⊓	H

Table 8–3–2. U11 Truth Table

Duty/Width Mode	U11 pin 5/6
variable	H
fixed 50 %	L
⊓	H

To check that the correct voltages are output from A11, refer to Service Block 5, Table 8–5–1 and A11 J4 pins 9, 10 and 11 (instead of A10 U1 pins 31, 30 and 36 respectively).

Table 8–3–3 U11, U12 Truth Table for various 8111A settings

8111A Setting			U11			U12	
Selected Waveform	**Freq & Duty/Width pressed for Burst No Display?**	**Duty Cycle Mode**	**pin 8**	**9**	**5/6**	**9**	**10**
⊓ or ⋀ or ∿	no	fixed 50 %	L	L	L	L	L
⊓ or ⋀ or ∿	no	variable	L	L	H	L	H
⊓ or ⋀ or ∿	yes	fixed 50 %	L	H	L	H	L
⊓ or ⋀ or ∿	yes	variable	L	H	H	H	L
⎍	yes	X	H	H	H	H	L
⎍	no	X	H	L	H	H	H

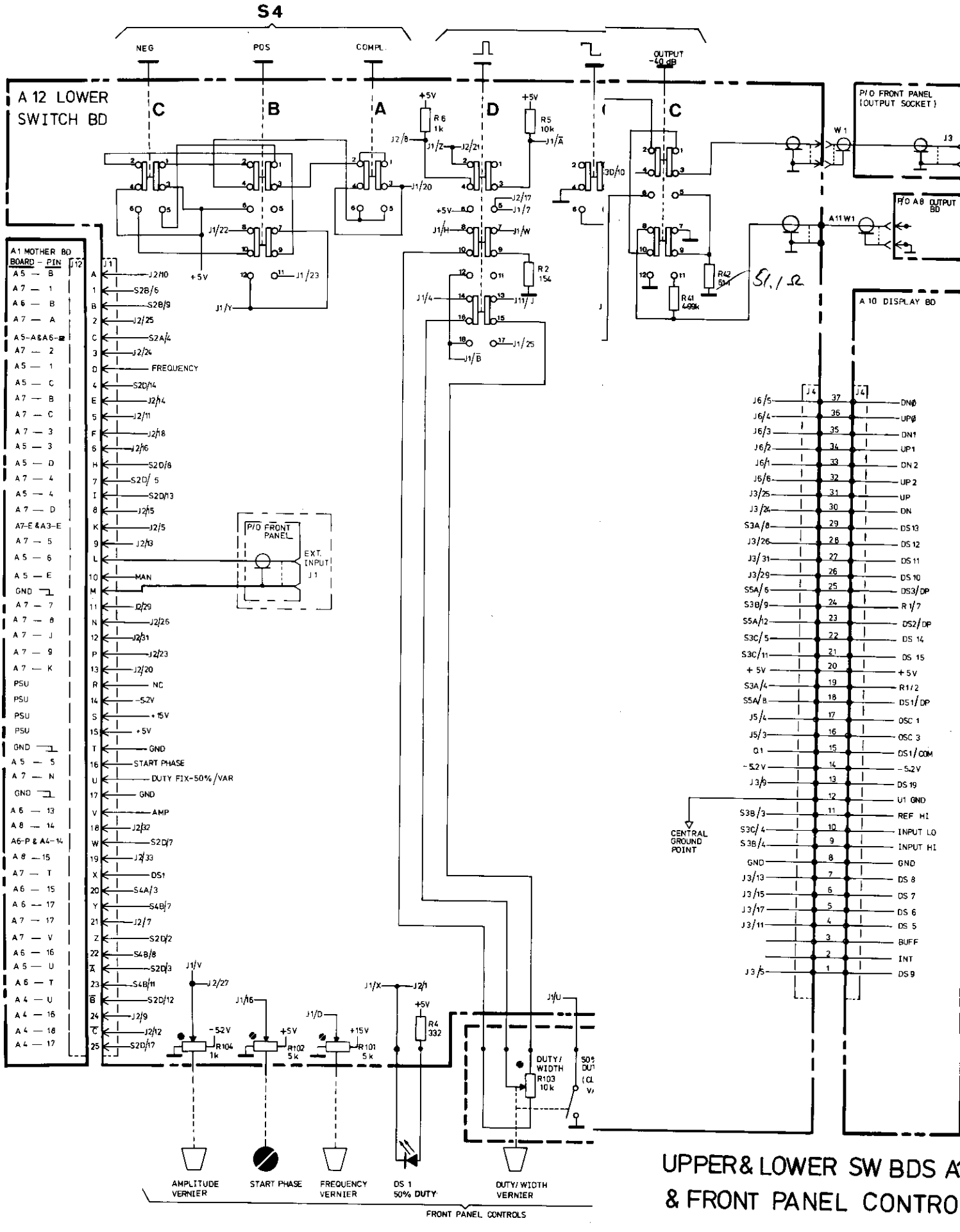
S4
NEG
POS
COMPL.
OUTPUT -40 dB
A 12 LOWER SWITCH BD
C
B
A
D
C
P/O FRONT PANEL (OUTPUT SOCKET)
W1
J3
P/O A8 OUTPUT BD
A11 W1
A 10 DISPLAY BD
A1 MOTHER BD
BOARD – PIN
J1
J2
J4
P/O FRONT PANEL
EXT. INPUT J1
FREQUENCY
MAN
START PHASE
DUTY FIX-50%/VAR
AMP
DS1
CENTRAL GROUND POINT
DUTY/WIDTH
R103 10k
R101 5k
R102 5k
R104 1k
R4 332
R2 154
R6 1k
R5 10k
R41 499k
R42 51k
51,1 Ω
AMPLITUDE VERNIER
START PHASE
FREQUENCY VERNIER
DS 1 50% DUTY
DUTY/WIDTH VERNIER
FRONT PANEL CONTROLS
UPPER & LOWER SW BDS A
& FRONT PANEL CONTRO

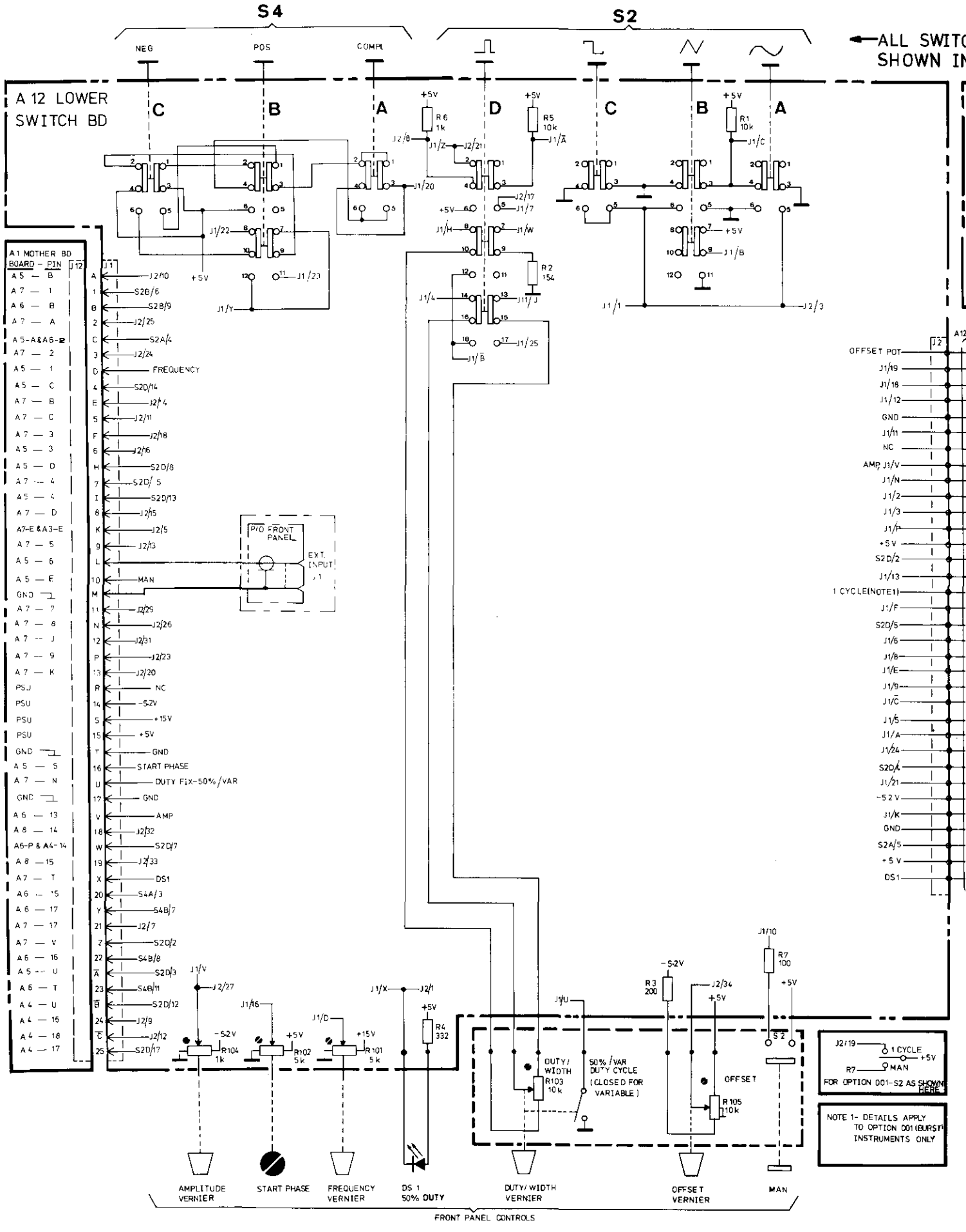
S4
S2
NEG
POS
COMPL
ALL SWITC
SHOWN IN
A 12 LOWER
SWITCH BD
A1 MOTHER BD
BOARD - PIN
P/O FRONT PANEL
EXT. INPUT
FREQUENCY
MAN
START PHASE
DUTY FIX-50%/VAR
AMP
DS1
OFFSET POT
1 CYCLE(NOTE1)
DUTY/WIDTH
50%/VAR DUTY CYCLE (CLOSED FOR VARIABLE)
OFFSET
FOR OPTION 001-S2 AS SHOWN HERE
NOTE 1- DETAILS APPLY TO OPTION 001 (BURST) INSTRUMENTS ONLY
AMPLITUDE VERNIER
START PHASE
FREQUENCY VERNIER
DS 1 50% DUTY
DUTY/WIDTH VERNIER
OFFSET VERNIER
MAN
FRONT PANEL CONTROLS

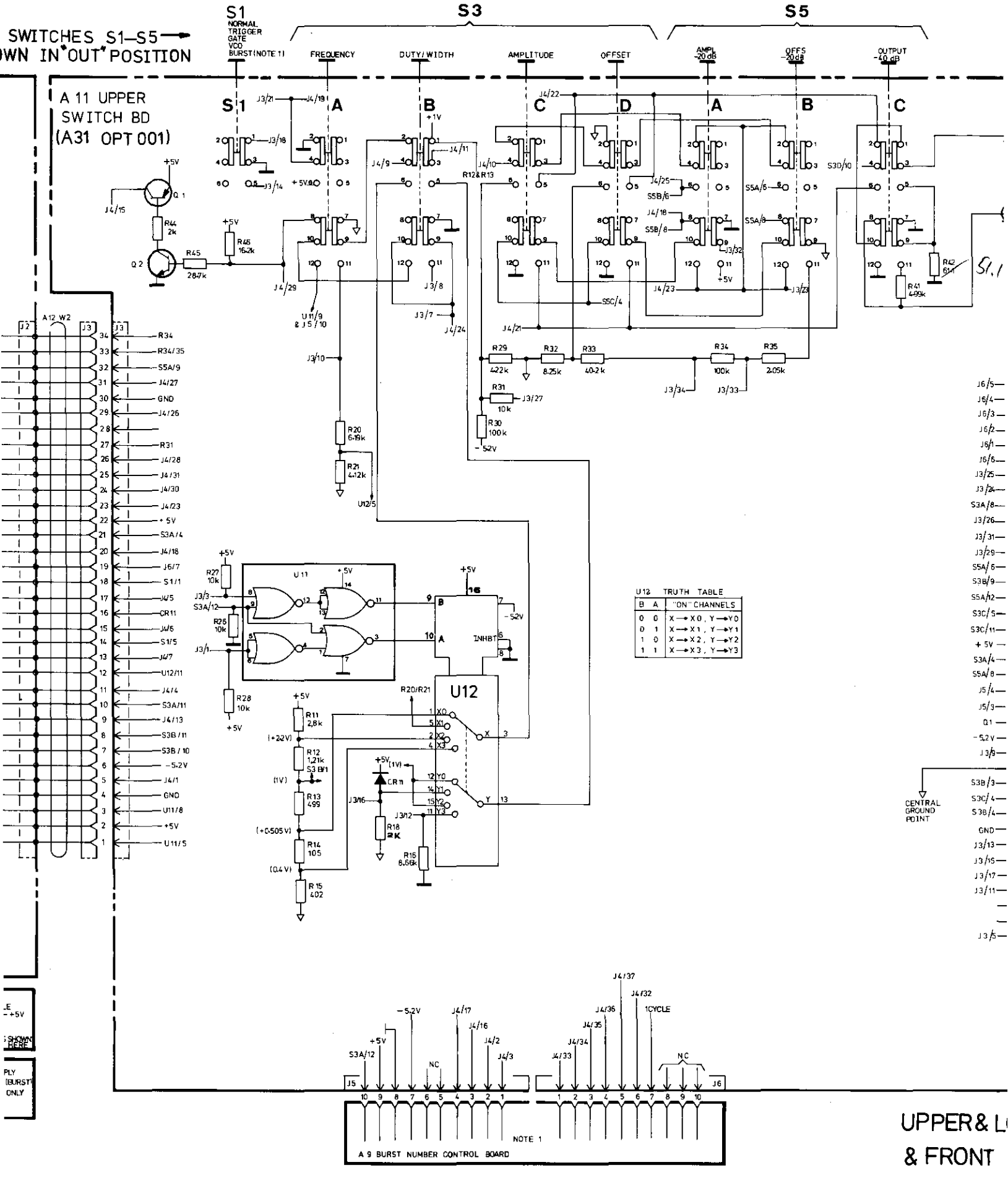
SWITCHES S1–S5
WN IN "OUT" POSITION
S1
NORMAL
TRIGGER
GATE
VCO
BURST (NOTE 1)
S3
FREQUENCY
DUTY/WIDTH
AMPLITUDE
OFFSET
S5
AMPL -20 dB
OFFS -20 dB
OUTPUT -40 dB
A 11 UPPER
SWITCH BD
(A31 OPT 001)
U12 TRUTH TABLE
B A "ON" CHANNELS
0 0 X → X0, Y → Y0
0 1 X → X1, Y → Y1
1 0 X → X2, Y → Y2
1 1 X → X3, Y → Y3
U12
U11
CENTRAL GROUND POINT
A 9 BURST NUMBER CONTROL BOARD
NOTE 1
UPPER & L
& FRONT

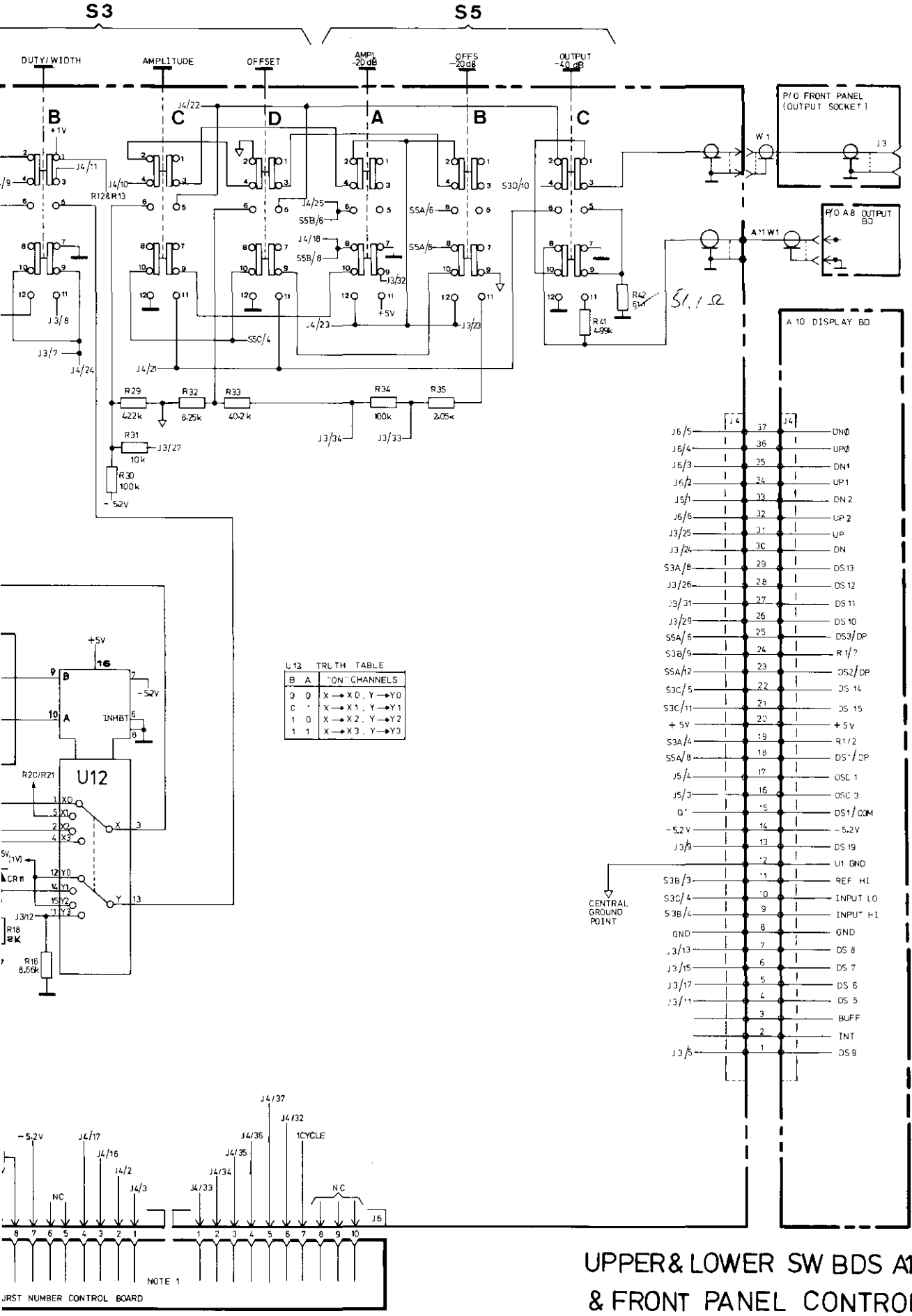

UPPER & LOWER SW BDS A11 & A12 & FRONT PANEL CONTROLS

3

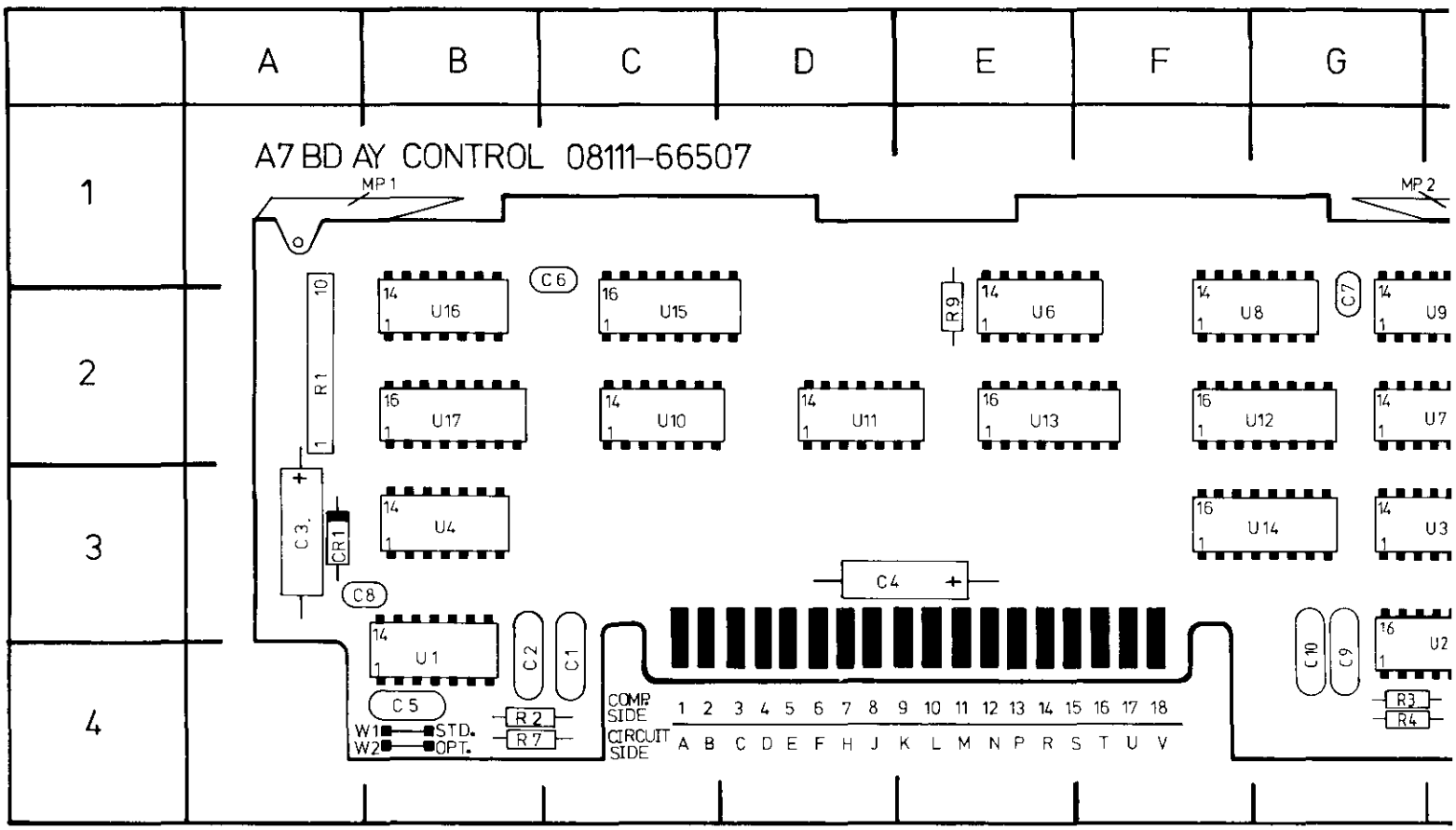

REF DESIG	GRID LOC	REF DESIG	GRID LOC
		U1	B4
C1	B4	U2	G/H3
C2	B4	U3	G3
C3	A3	U4	B3
C4	E3	U6	E2
C5	B4	U7	G2
C6	C1	U8	F2
C7	G2	U9	G2
C8	A3	U10	C2
C9	G3/4	U11	D2
C10	G3/4	U12	F2
CR1	A3	U13	G3
R1	A2	U14	F3
R2	B4	U15	C2
R3	G/H4	U16	B2
R4	G/H4	U17	B2
R7	B4	W1	B4
R9	E2	W2	B4

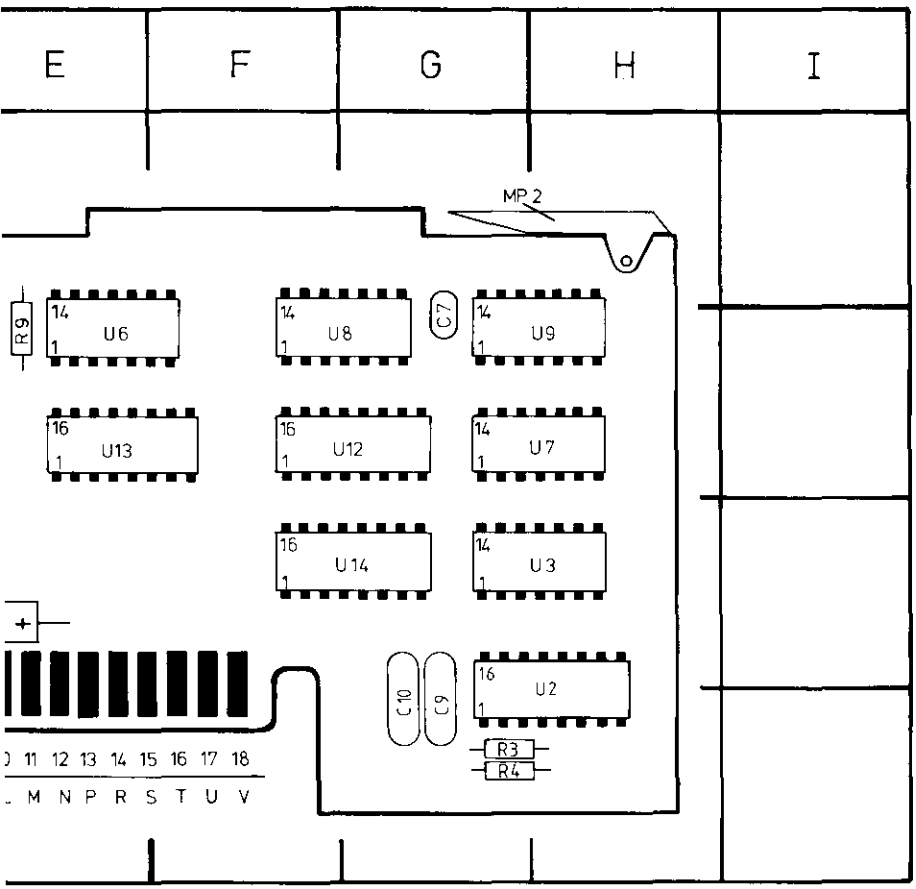
E
F
G
H
I
MP 2
R9
14
U6
1
14
U8
1
C7
14
U9
1
16
U13
1
16
U12
1
14
U7
1
16
U14
1
14
U3
1
+
C10
C9
16
U2
1
R3
R4
11 12 13 14 15 16 17 18
M N P R S T U V

SERVICE BLOCK 4
CONTROL BOARD A7 4

THEORY OF OPERATION

General

The Control Board is the interface between the Switch boards A11, A12 and VCO and Width boards. It also directly controls the following Display board LEDs: operating mode, numeric display decimal point position, and the width and frequency unit indicators. An additional feature of A7 is to provide 8111A "power on" initial condition settings via the preset circuitry.

OPERATION

Referring to the block diagram Figure 8–4–1, the board operation is as follows: The two up/down counters U12 and U13 are clocked by the range rocker switch and output their data to either the VCO or Width boards. They also output, via U14/U15, the appropriate range unit and decimal point data to the Display board A10. The range rocker switch data is input to either U12 or U13 via multiplexers U8A, C and U9A, C depending on whether the FREQUENCY or DUTY/WIDTH front panel pushbuttons are depressed.

The mode select pushbutton signal clocks a counter U17 whose outputs are fed to the VCO board A5 and sets the operating mode of the Triangle/Slope Generator IC A5U1. A7U17 outputs are also fed to the Display board and control the operating mode LEDs. In Option 001 (Burst) instruments A7U17 outputs enable the Burst function and associated mode LED.

On 8111A switch on the preset circuit sets the instrument to NORMAL mode, 1–10kHz frequency range and 1–10 μs pulse width range. In option 001 models the burst counter is preset to one.

Depending on whether a waveform function (instead of PULSE) is selected, the operative frequency range and/or the position of the DUTY CYCLE vernier/switch, the "50 % LED" will be energised and the VCO board current source suitably controlled via the circuit elements shown.

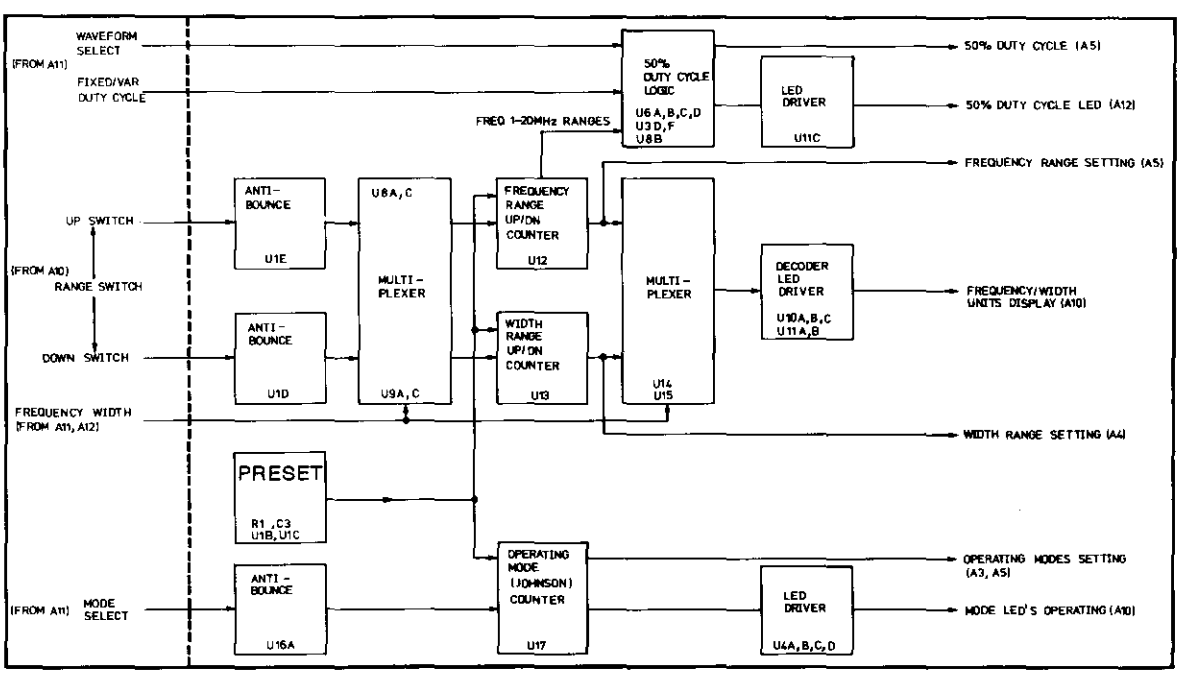

Figure 8–4–1. Simplified Control Board Block Diagram

TROUBLESHOOTING

The board can be considered as three separate functions for troubleshooting purposes. These are:

Fixed 50 % Duty Cycle Logic
Frequency/Width Up and Down Ranging
Operating Mode Selection.

Since the three functions are all very different it is quite easy to link a failure or fault to the appropriate one.

All logic levels are TTL and can be measured with a suitable logic probe, it can be either externally energised or the 8111A +15 V supply may be used.

To isolate a fault check the circuit operation with the aid of the following truth tables.

Table 8–4–1. U6, U11 Truth Table

8111A Setting	U6 pin 13	U11 pin 8
⎍–Mode	H	H
∿ ∿ ⎍ Mode, fixed 50 % DTY	H	L
∿ ∿ ⎍ Mode, variable DTY, 1 MHz–20 MHz	H	L
∿ ∿ ⎍ Mode, variable DTY, 1 Hz–1000 kHz	L	H

Table 8–4–2. U8 Truth Table

8111A Setting	down ranging				up ranging			
U8 pin	1	2	13	12	11	9	10	8
Frequency pushbutton pressed								
10 – 20 MHz	H	H	⎍	⎍	H	L	⎍	H
1 – 10 MHz	H	H	⎍	⎍	H	H	⎍	⎍
100 – 1000 kHz	H	H	⎍	⎍	H	H	⎍	⎍
10 – 100 kHz	H	H	⎍	⎍	H	H	⎍	⎍
1 – 10 kHz	H	H	⎍	⎍	H	H	⎍	⎍
100 – 1000 Hz	H	H	⎍	⎍	H	H	⎍	⎍
10 – 100 Hz	H	H	⎍	⎍	H	H	⎍	⎍
1 – 10 Hz	H	L	⎍	H	H	H	⎍	⎍
Frequency pushbutton released	L	X	⎍	H	L	X	⎍	H

Table 8–4–3. U9 Truth Table

8111A Setting	U9 pin	down ranging 1	2	13	12	up-ranging 11	9	10	8
Width and ⎍-Mode pushbuttons pressed									
10 – 100 ms		H	H	⎿	⎾	H	L	⎿	H
1 – 10 ms		H	H	⎿	⎾	H	H	⎿	⎾
100 – 1000 µs		H	H	⎿	⎾	H	H	⎿	⎾
10 – 100 µs		H	H	⎿	⎾	H	H	⎿	⎾
1 – 10 µs		H	H	⎿	⎾	H	H	⎿	⎾
100 – 1000 ns		H	H	⎿	⎾	H	H	⎿	⎾
25 – 100 ns		H	L	⎿	H	H	H	⎿	⎾
Width or ⎍-Mode pushbutton released		L	X	⎿	H	L	X	⎿	H

Fixed 50 % Duty Cycle Logic

Table 8–4–4. U12 Truth Table

8111A Frequency Range Setting	Range Data U12 pin	C 6	B 2	A 3
10 – 20 MHz		L	L	L
1 – 10 MHz		L	L	H
100 – 1000 KHz		L	H	L
10 – 100 KHz	(Status at 8111A	L	H	H
1 – 10 KHz	Switch on) →	H	L	L
100 – 1000 Hz		H	L	H
10 – 100 Hz		H	H	L
1 – 10 Hz		H	H	H

Frequency/Width Up/Down Ranging

Table 8–4–5. U13 Truth Table

8111A Width Range Setting	Range Data U13 pin	C 6	B 2	A 3
10 – 100 ms		L	L	L
1 – 10 ms		L	L	H
100 – 1000 µs		L	H	L
10 – 100 µs		L	H	H
1 – 10 µs	(Switch on Status) →	H	L	L
100 – 1000 ns		H	L	H
25 – 100 ns		H	H	L

Operating Mode Selection

Table 8–4–6. U17 Truth Table

8111A Setting / U17pin	Q_0 3	Q_1 2	Q_2 4	Q_3 7	Q_4 10
NORMAL	H	L	L	L	L
TRIGGER	L	H	L	L	L
GATE	L	L	H	L	L
VCO	L	L	L	H	L
BURST (Option 001 only)	L	L	L	L	H

The counter is reset when Q_4 (Q_5 in Option 001) goes to high level.

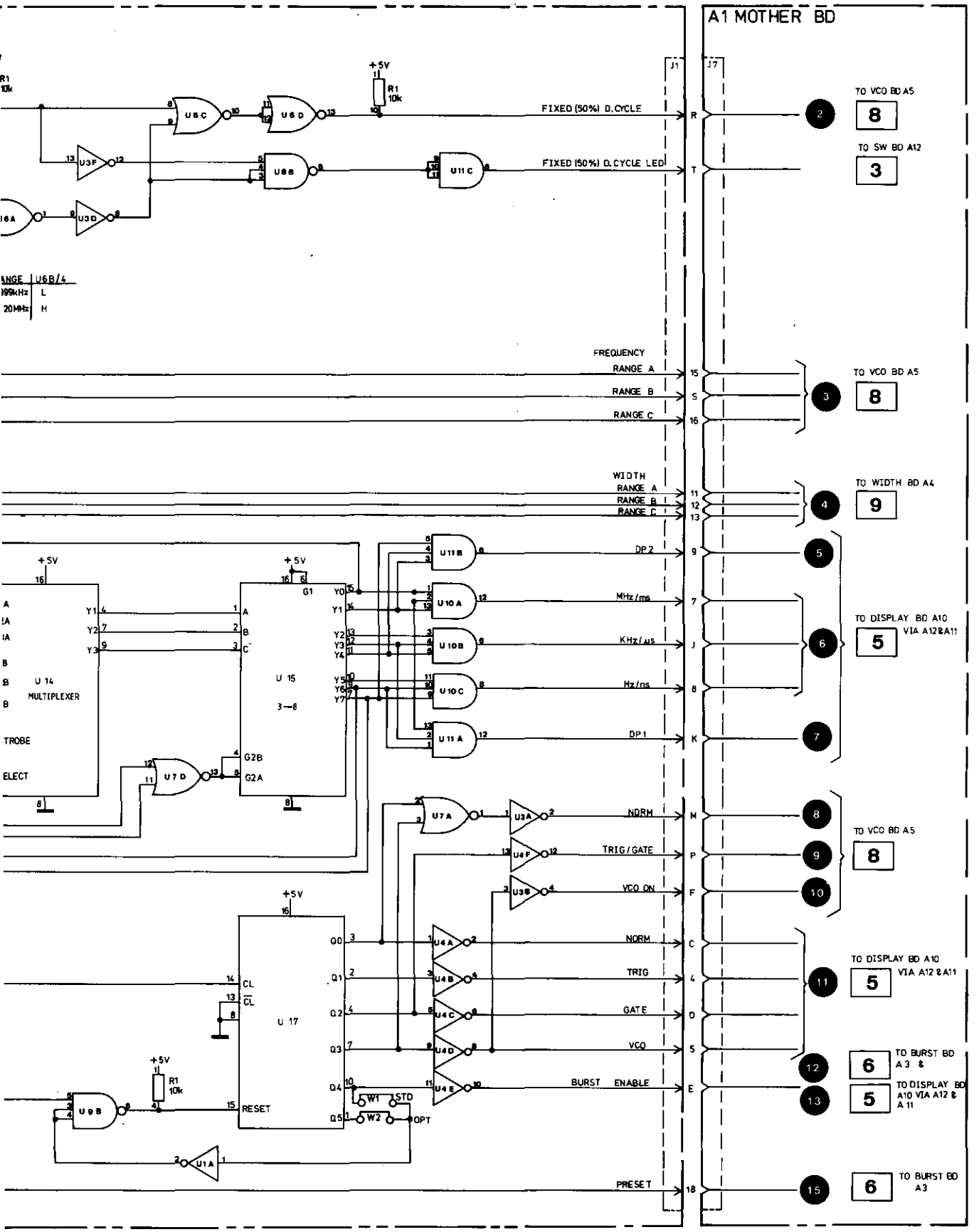

CONTROL BOARD A7 **4**

ONTROL 08111-66507

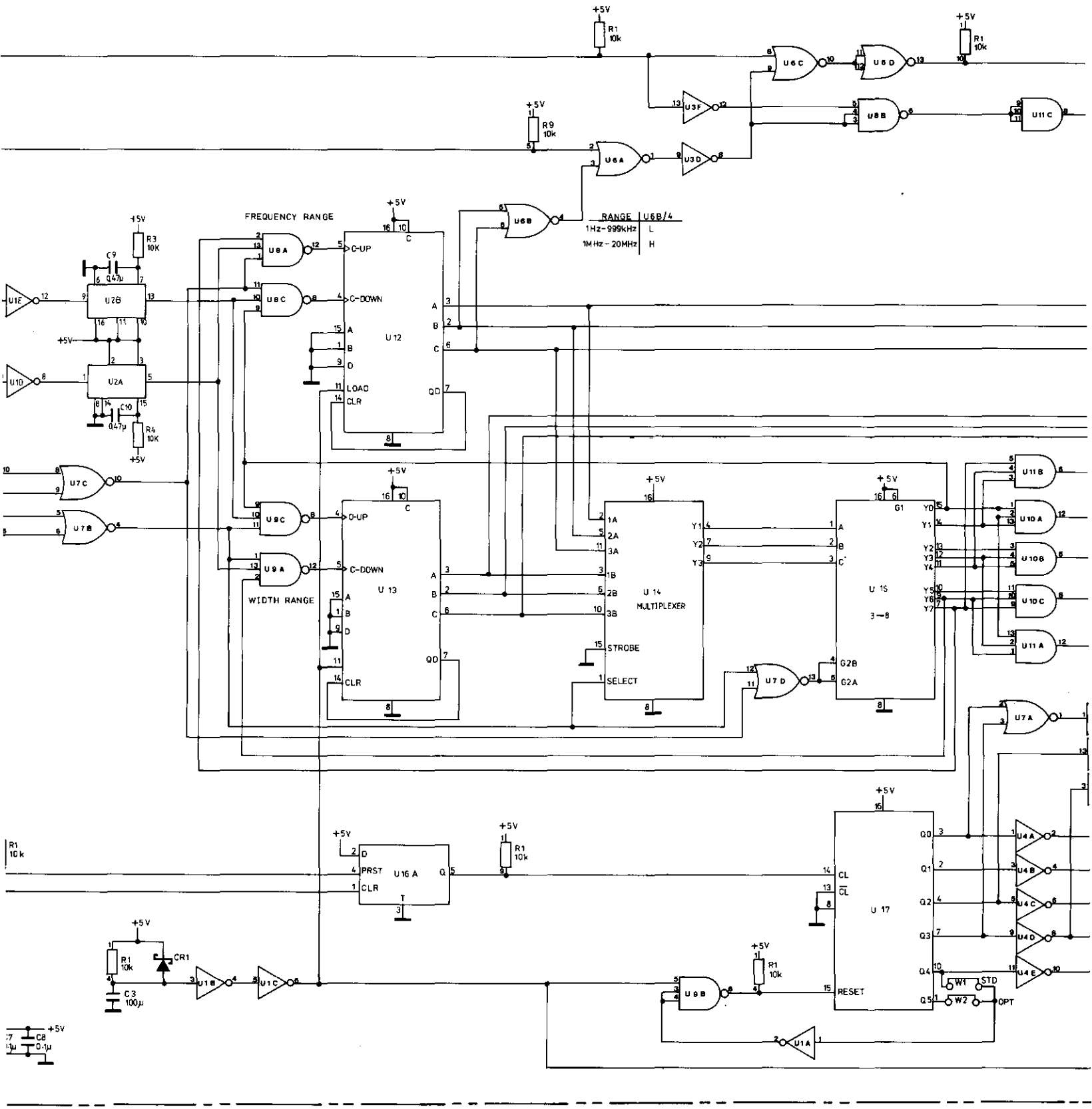

BETWEEN BOARDS
LESS OTHERWISE INDICATED

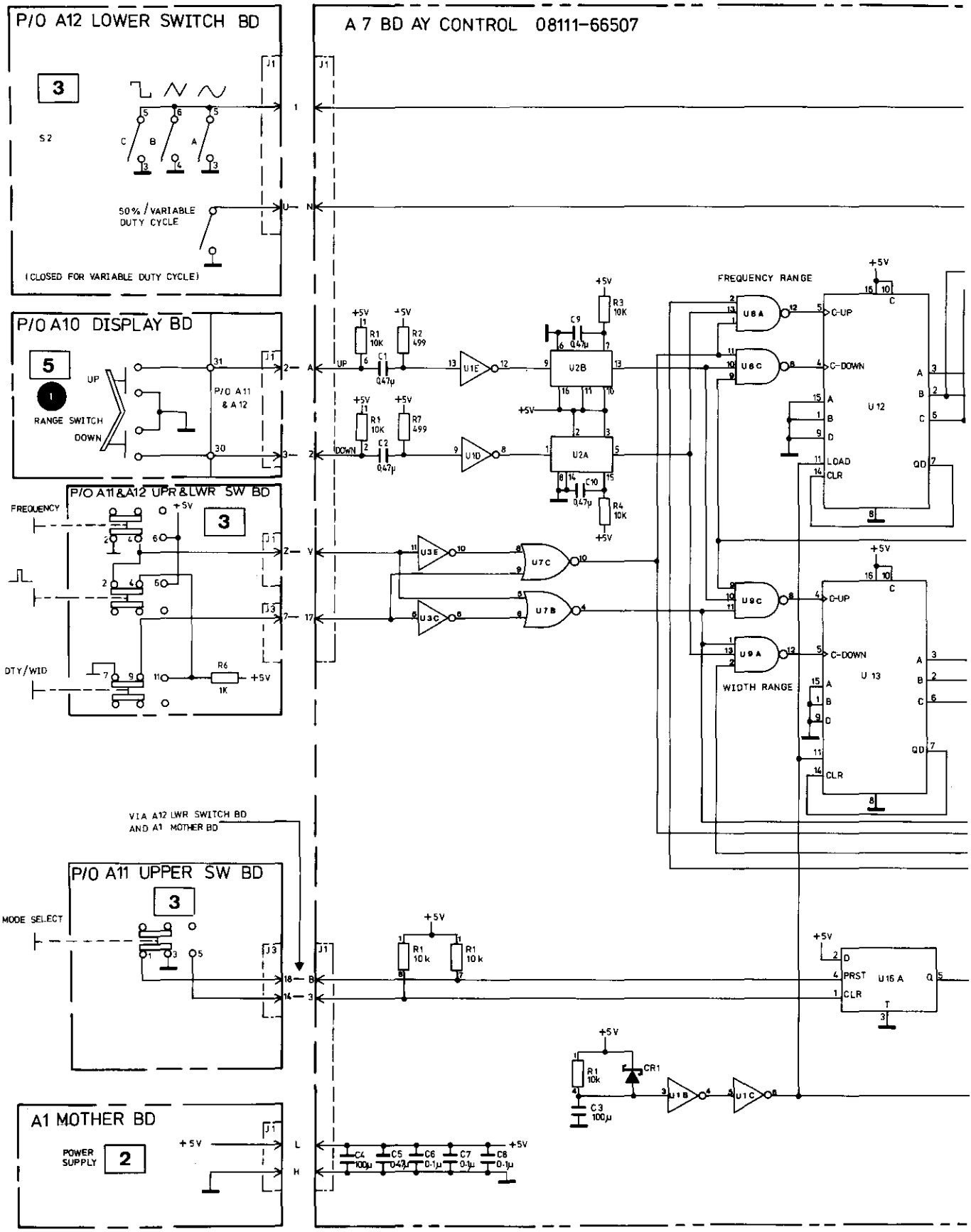

NOTE : ALL INTERCONNECTIONS BETWEEN BOARDS VIA A1 MOTHERBOARD UNLESS OTHERWISE INDICATED

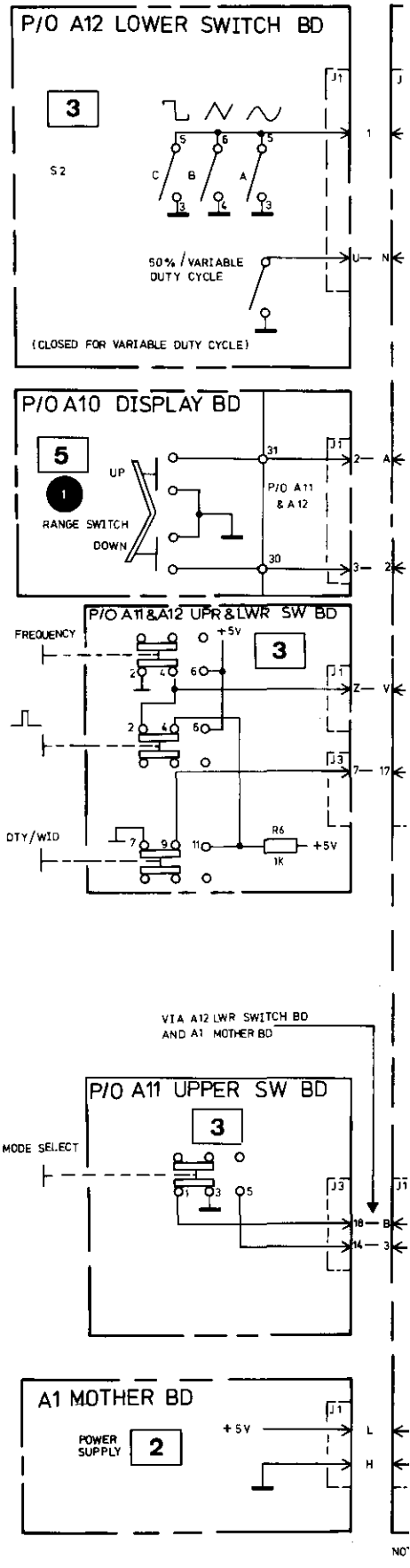
P/O A12 LOWER SWITCH BD
3
S2
C
B
A
50% / VARIABLE DUTY CYCLE
(CLOSED FOR VARIABLE DUTY CYCLE)
P/O A10 DISPLAY BD
5
1
RANGE SWITCH
UP
DOWN
P/O A11 & A12
P/O A11&A12 UPR&LWR SW BD
FREQUENCY
+5V
3
DTY/WID
R6
1K
+5V
VIA A12 LWR SWITCH BD AND A1 MOTHER BD
P/O A11 UPPER SW BD
3
MODE SELECT
A1 MOTHER BD
POWER SUPPLY
2
+5V

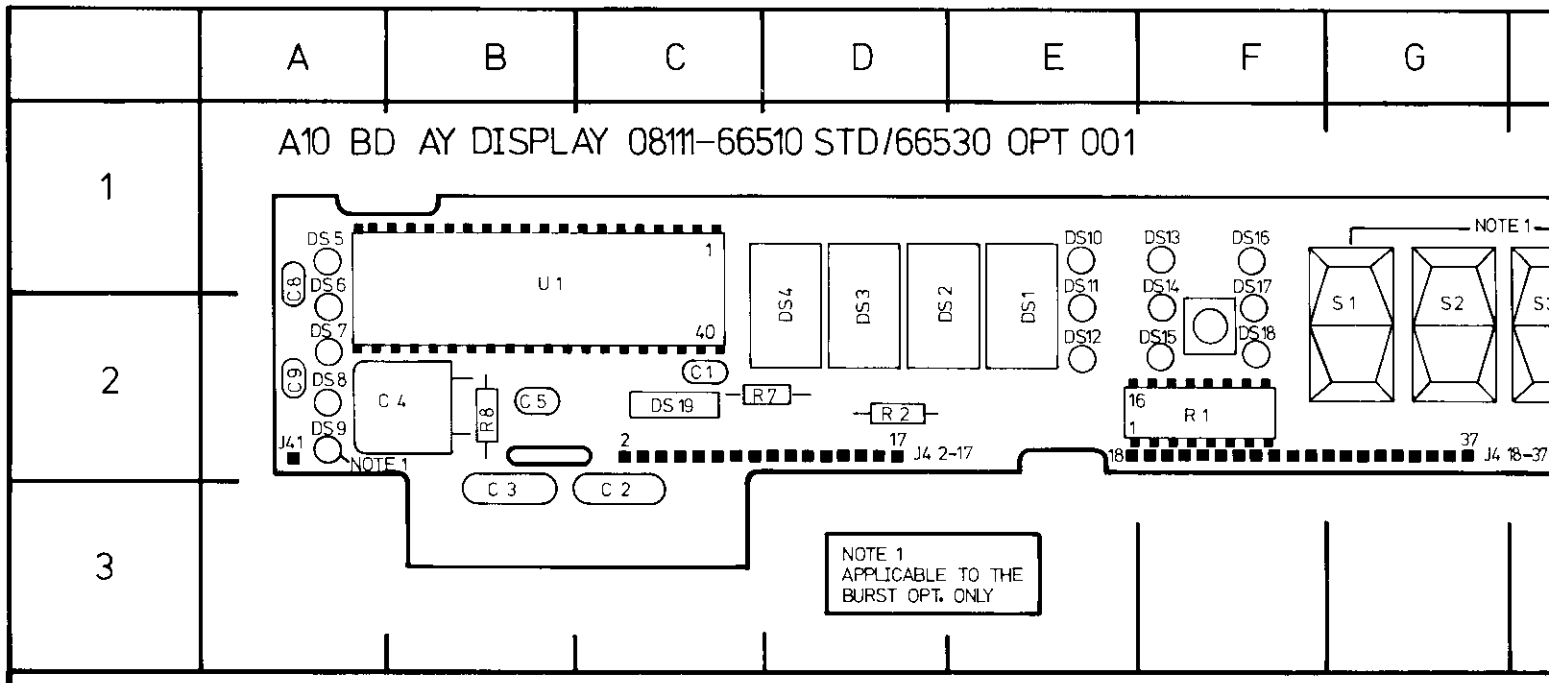

REF DESIG	GRID LOC	REF DESIG	GRID LOC	REF DESIG	GRID LOC
C1	C2	DS9	A2	S1	G2
C2	C3	DS10	E1	S2	D2
C3	B3	DS11	E2	S3	H2
C4	B2	DS12	E2	S4	H2
C5	B2	DS13	F1	U1	B/C2
C8	A1	DS14	F2		
C9	A2	DS15	F2		
DS1	E2	DS16	F1		
DS2	E2	DS17	F2		
DS3	D2	DS18	F2		
DS4	D2	DS19	C2		
DS5	A1	R1	F2		
DS6	A2	R2	D2		
DS7	A2	R7	C2		
DS8	A2	R8	B2		

5

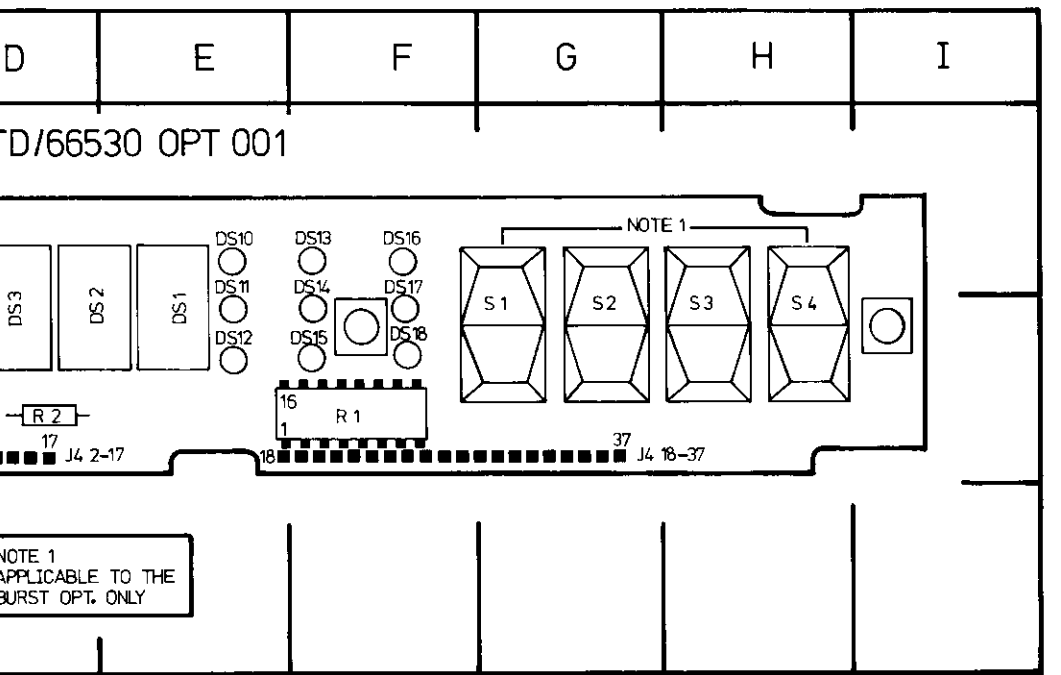

GRID
LOC

G2
D2
I2
I2
B/C2

SERVICE BLOCK 5
DISPLAY BOARD A10 (A30) 5

THEORY OF OPERATION

All parameters of the 8111A except the burst number are voltage controlled via the front panel settings. The resulting control voltages are measured by a DVM based on an A–D converter IC–U1. This "DVM" uses the dual slope integration method of A–D conversion and the operating principle is shown in Figure 8–5–1.

The operation is as follows: The signal input voltage is connected to the integrator for a time period of 1000 oscillator cycles, this is therefore the integration time T_I .During this time, C_{int} is charged up linearly starting from 0 volts. At the end of T_I C_{int} will have been charged to a value proportional to the input voltage. The second phase of the dual slope integration involves connecting a fixed reference voltage V_{ref} to the integrator input, this voltage is of opposite polarity to the signal input and results in C_{int} being linearly discharged. At the beginning of this discharge the output from the oscillator is gated into a counter, the gate is disabled when C_{int} has discharged to zero.

Referring to Figure 8–5–2, when the input voltage is equal to the reference the time to discharge C_{int} will be the period for 1000 oscillator cycles and the displayed value will be 1000. When the input voltage = 2 x V_{ref} then the discharge time will be 2000 cycles and the corresponding display will be 2000 etc.

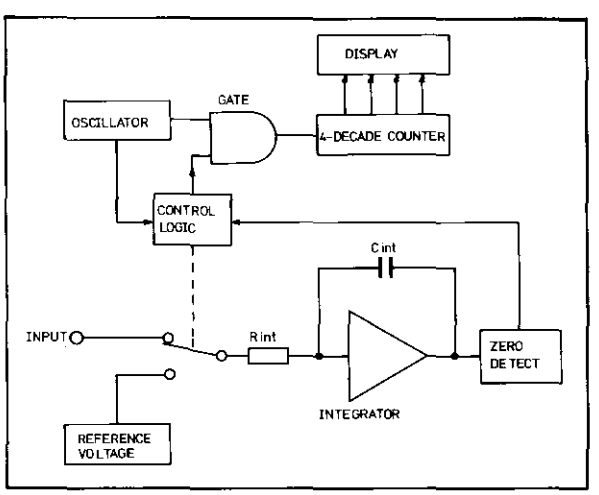

Figure 8–5–1. Simplified Dual Slope Integrating DVM

The DVM IC has differential inputs for both the input and the reference voltages. The Ref. low input is always connected to ground and therefore the displayed value is expressed by:

$$\text{Displayed Value} = \frac{V_{in\ Hi} - V_{in\ Lo}}{V_{ref\ Hi}} \cdot 1000$$

Since various parameters have to be displayed it is necessary to vary the value of V_{ref} and/or interchange it with the V_{in}. The following paragraphs detail how this is done for all parameter display requirements.

Amplitude, Offset and Frequency

To display these parameters the DVM IC is used in its normal application i.e. V_{ref} = 1 V, the parameter control voltages are fed to the differential inputs of IC and are displayed in their "Oscillator cycle count" equivalent. The decimal point position is controlled by the Control board A7.

Width

The width control voltage is inversely proportional to the width value, therefore, to achieve the correct display value the input signal (control voltage) and the reference voltage for the DVM IC U1 are interchanged.

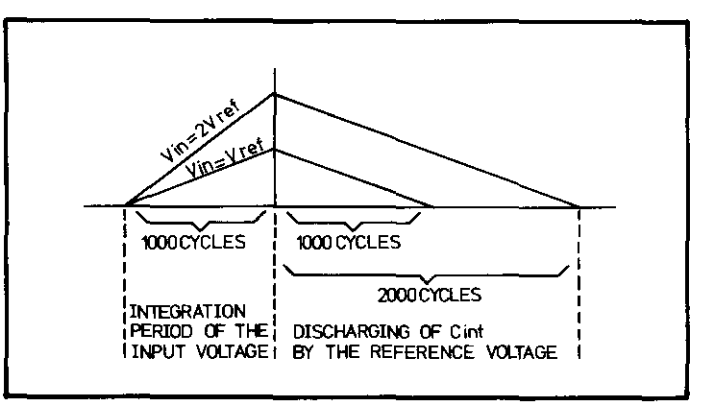

Figure 8–5–2. Dual Slope Integration Measurement Sequence

Duty Cycle

The Duty Cycle is determined by the ratio between the control voltage for the frequency and the voltage V_{up} which controls the I_{up} current source on the VCO board. To display this ratio, V_{up} is used as a variable reference voltage and the frequency control voltage is connected to the input pins of U1.

In fixed duty cycle (50 %) mode a constant 0.505 V voltage is connected to the DVM IC input with a reference voltage of 1 V, this therefore results in 50 being displayed (the last digit is blanked). See Table 8–5–1 for clarification.

Burst (Option 001 only)

The display method for the burst number is a totally digital procedure unlike that for all other parameters and is controlled from the Burst No Control board A9. The theory of operation including the display technique is described in Service Block 6. Table 8–5–1 shows the input conditions at the DVM IC U1 for all parameter displays.

DVM IC U1

If the fault is that the display readout remains fixed when any vernier control is varied but the decimal point position and unit indicators may be varied then A10 U1 oscillator is suspect. The correct oscillator output should be as shown below with a frequency of approximately 190 kHz. If there is no output verify that U1 pin 40 is not shorted to ground since this disables the oscillator.

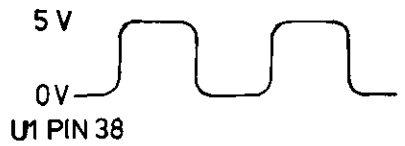

Numeric Display

The display can be checked for correct operation – all segments operatable – by connecting U1 pin 37 to +5 V, all numeric displays should then be illuminated to give a readout of –1888.

TROUBLESHOOTING

General

Since all switching and changing of the reference and input signals for the DVM is done on switch board A11 by A11U12, most cases of incorrect display value are likely to be related to the A11, A12 assembly. A12 is mentioned since the vernier control outputs go via A12 to A11. If the fault concerns the operating mode, decimal point, width or frequency unit indicating LEDs and not the numeric displays then the Control Board A7 should be suspected.

Table 8–5–1. Display Required/DVM Input Voltages

Displayed Parameter	DVM Input Voltages			Values shown on the Display = $\frac{V_{HI}-V_{LO}}{V_{REF}} \cdot 1000$
	INPUT HI pin 31	INPUT LO pin 30	REF HI pin 36	
FREQUENCY	V_{Freq} 0.1 V ... 1 V	gnd	+1 V	10.0 ... 100.0
FIXED 50 % DUTY CYCLE	0.505 V	gnd	+1 V	50 } last digit switched off
VARIABLE DUTY CYCLE	V_{Freq} 40 mV...0.4 V	gnd	V_{up} 40 mV...0.4 V	10 ... 90 } last digit switched off
WIDTH	+0.4 V	gnd	V_{Width} 4 V ... 0.4 V	10.0 ... 100.0
AMPLITUDE	gnd	V_{Ampl} −0.16 V ...−1.6 V	+1 V	1.60 ... 16.00
OFFSET	gnd	V_{offs} +0.8 V ... −0.8 V	+1 V	−8.00 ... 8.00
BURST	2.2 V	gnd	+1 V	1...1999

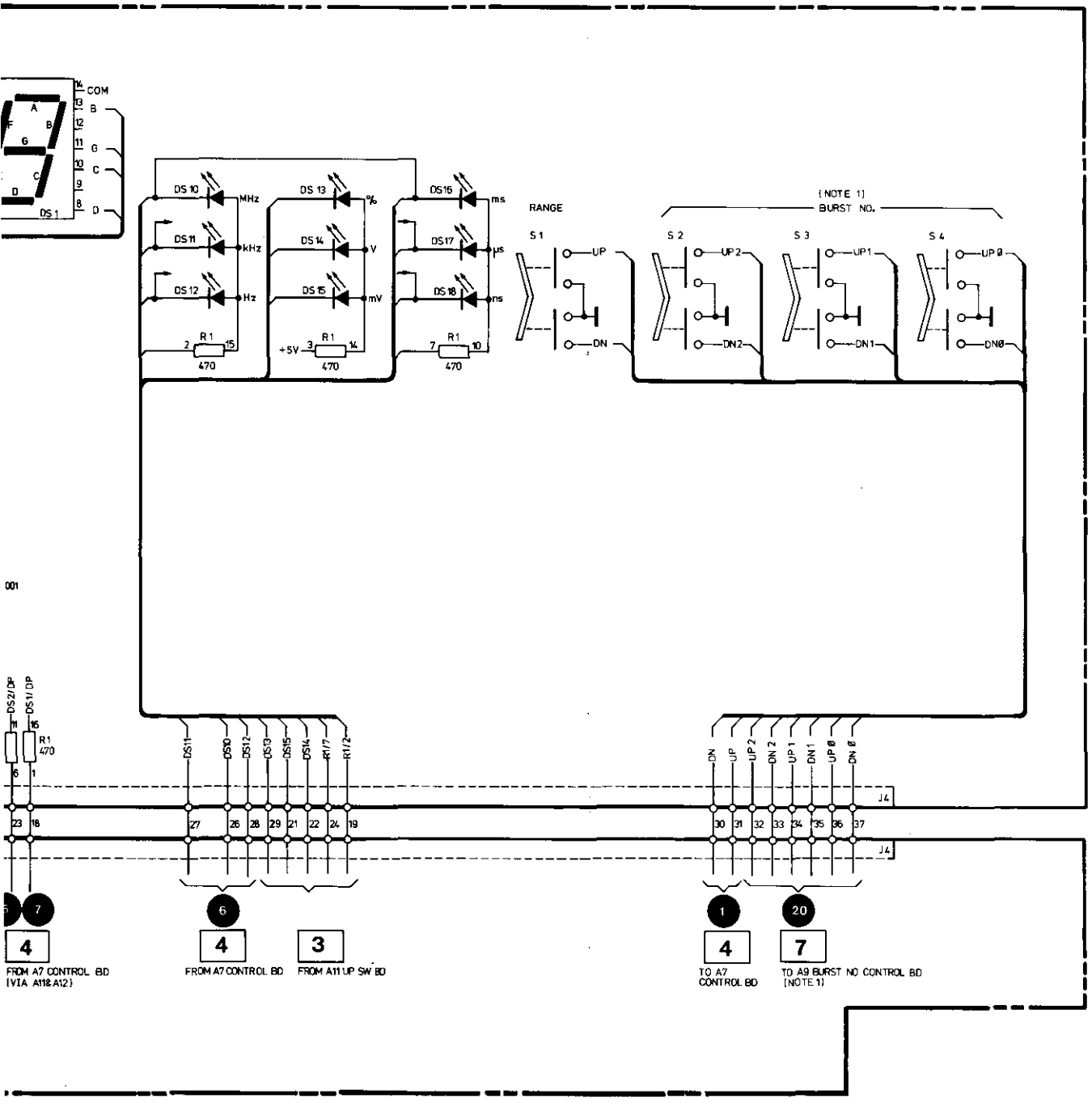

DISPLAY BD A10 (OPT 001 A30)

5

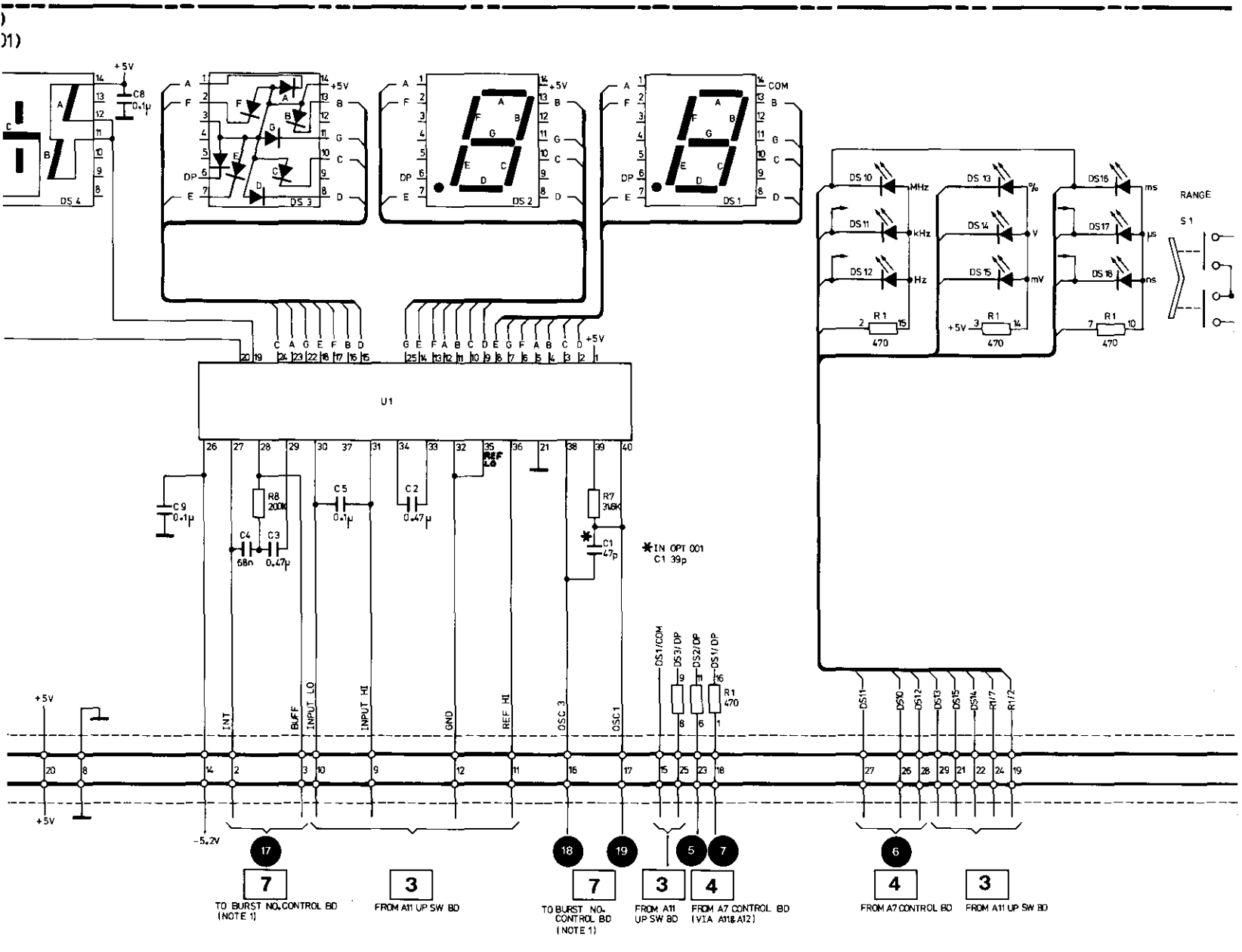
DS 4
DS 3
DS 2
DS 1
C8 0.1µ
U1
C9 0.1µ
R8 200K
C4 68n
C3 0.47µ
C5 0.1µ
C2 0.47µ
R7 3.9K
C1 47p
*IN OPT 001 C1 39p
DS10 MHz
DS11 kHz
DS12 Hz
DS13 %
DS14 V
DS15 mV
DS16 ms
DS17 µs
DS18 ns
R1 470
RANGE
S1
INT
BUFF
INPUT LO
INPUT HI
GND
REF HI
OSC 3
OSC 1
DS1/COM
DS3/DP
DS2/DP
DS1/DP
-5.2V
TO BURST NO. CONTROL BD (NOTE 1)
FROM A11 UP SW BD
TO BURST NO. CONTROL BD (NOTE 1)
FROM A11 UP SW BD
FROM A7 CONTROL BD (VIA A11 & A12)
FROM A7 CONTROL BD
FROM A11 UP SW BD

A 10 BD AY DISPLAY 08111-66510 (STANDARD)
A 30 BD AY DISPLAY 08111-66530 (OPTION 001)

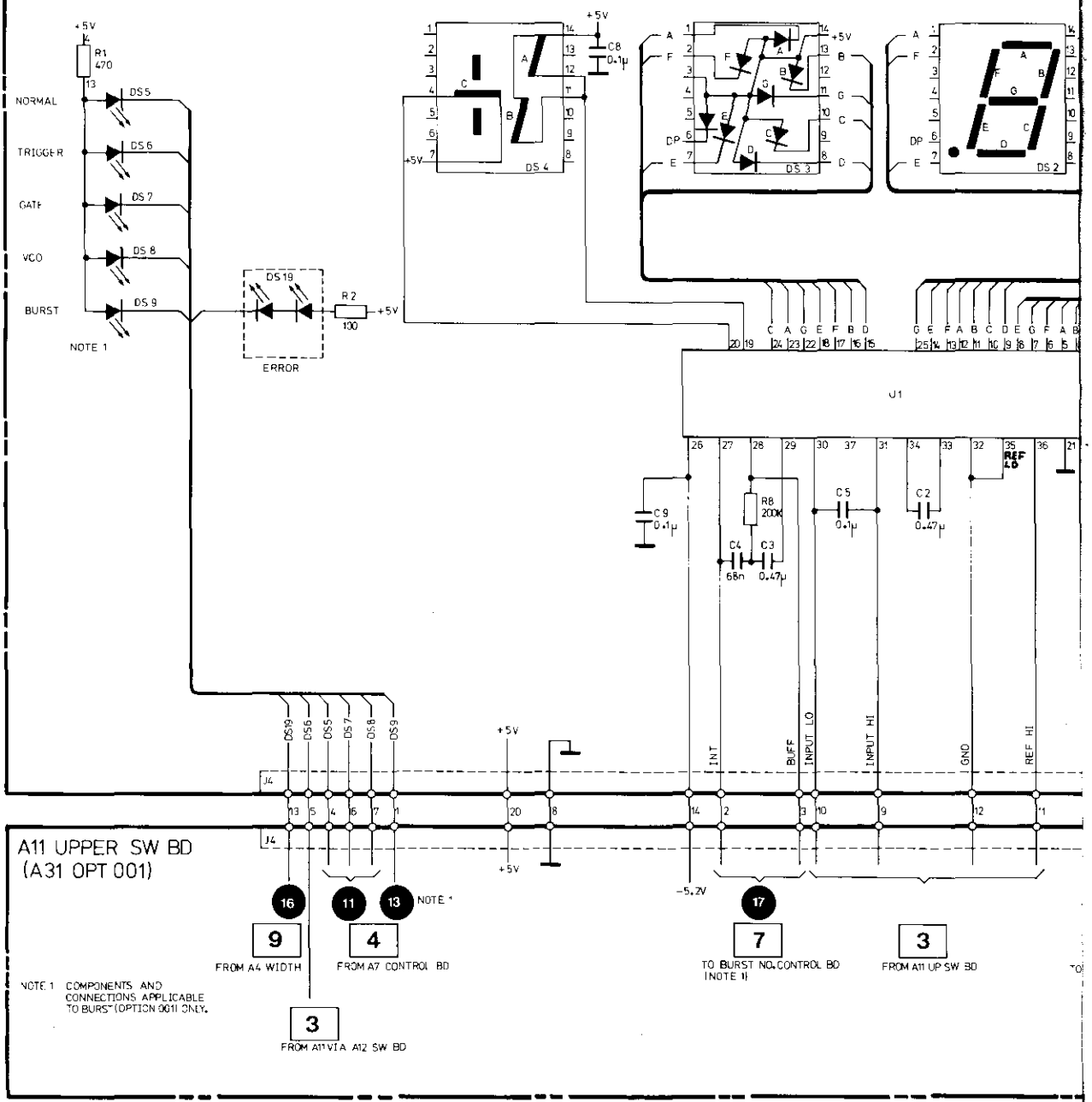

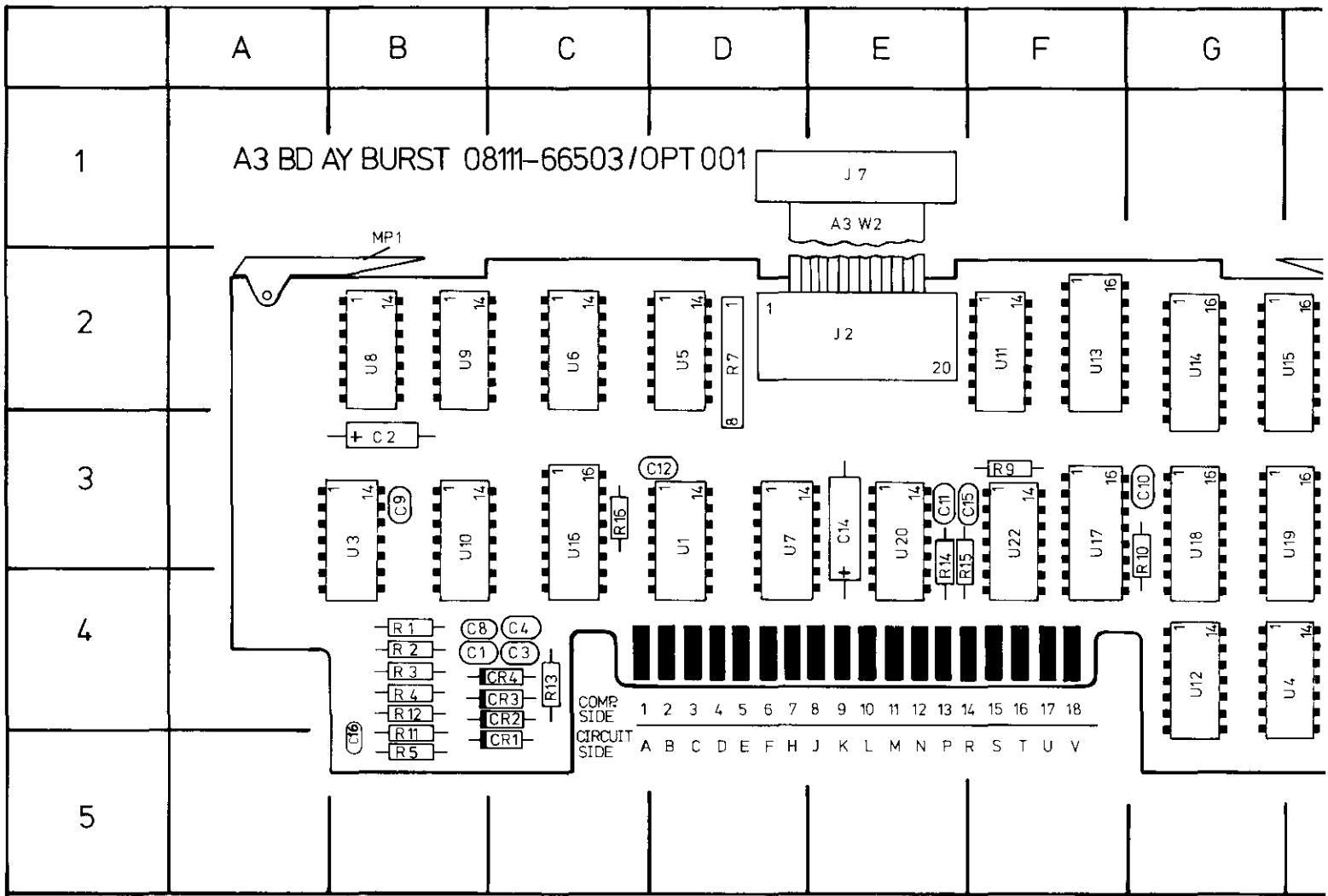

REF DESIG	GRID LOC	REF DESIG	GRID LOC	REF DESIG	GRID LOC	REF DESIG	GRID LOC
C1	B4	CR1	C5	R12	B4	U11	F2
C2	B3	CR2	C4	R13	C4	U12	G4
C3	C4	CR3	C4	R14	E3	U13	F2
C4	C4	CR4	C4	R15	E3	U14	G2
C5	H2	R1	B4	R16	C3	U15	H2
C6	H2	R2	B4	U1	D3	U16	C3
C7	H4	R3	B4	U2	H3	U17	F3
C8	B4	R4	B4	U3	B3	U18	G3
C9	B3	R5	B5	U4	H4	U19	H3
C10	G3	R6	H2	U5	D2	U20	E3
C11	E3	R7	D2	U6	C2	U21	H4
C12	D3	R8	H2	U7	D3	U22	F3
C13	H3	R9	F3	U8	B2	C16	B5
C14	E3	R10	G3	U9	B2		
C15	E3	R11	B5	U10	B3		

6

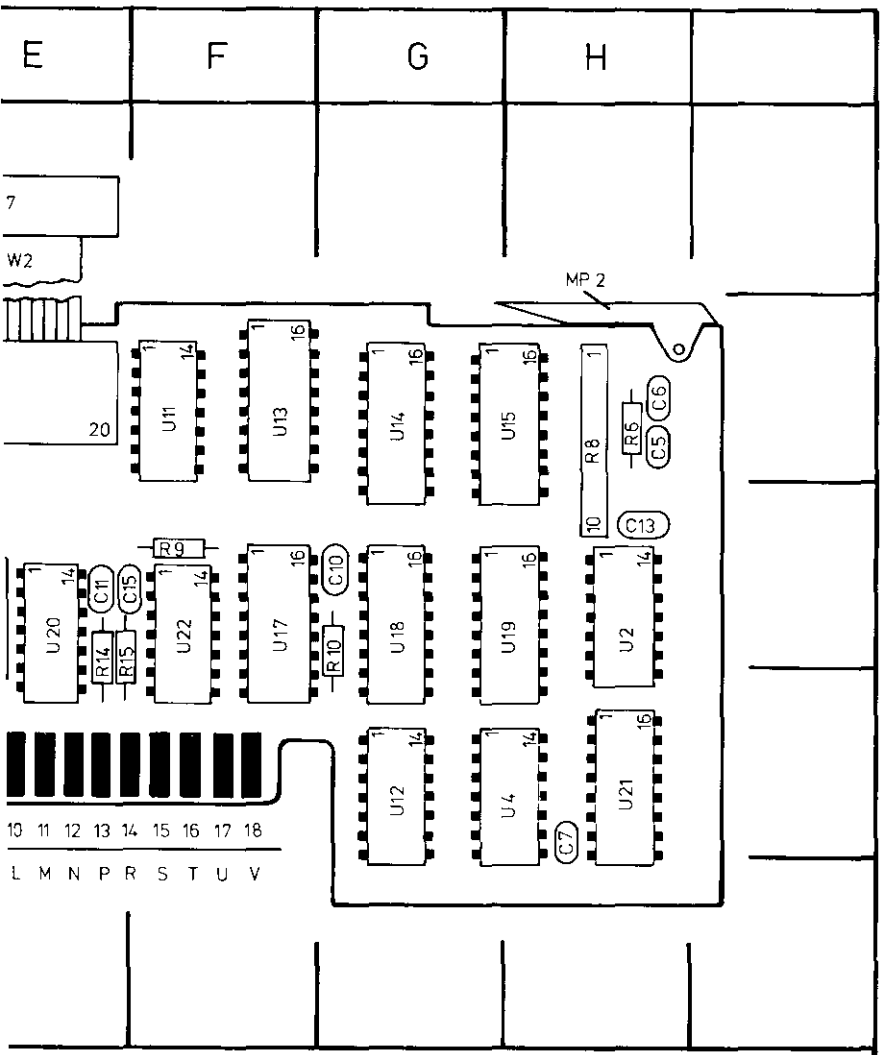

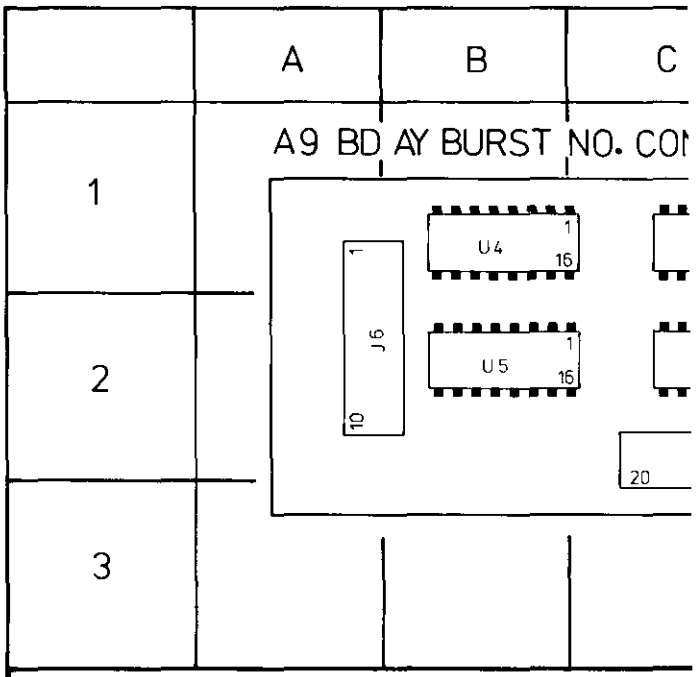

IG	GRID LOC
	F2
	G4
	F2
	G2
	H2
	C3
	F3
	G3
	H3
	E3
	H4
	F3
	B5

REF DESIG	GRID LOC	REF DESIG	GRID LOC
C1	D1	U4	B1
Q1	F2	U5	B2
R1	F2	U6	C2
R2	F1	U7	F1
R3	E1		
R4	F2		
R5	F2		
R6	E2		
R7	E2		
R8	E1		
R9	E2		
R10	F2		
U1	F2		
U2	E1		
U3	C1		

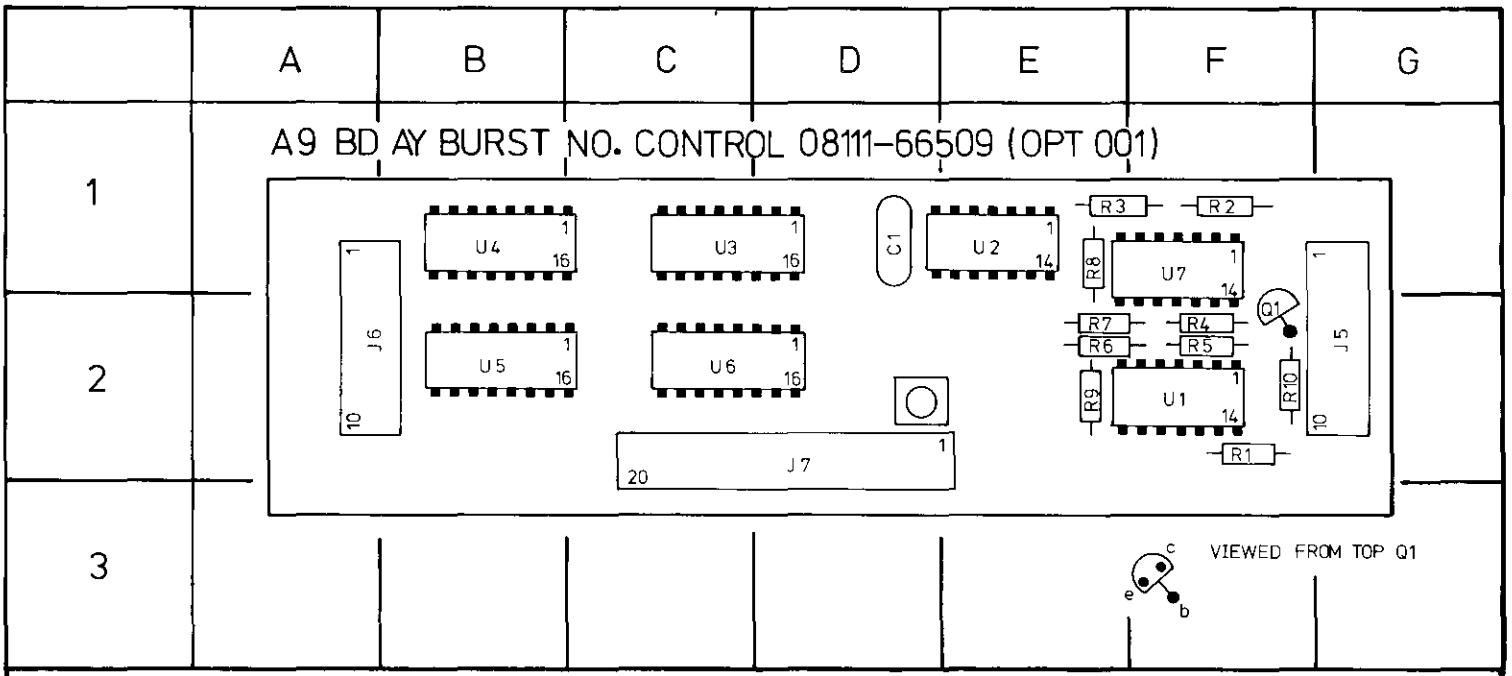

REF DESIG	GRID LOC	REF DESIG	GRID LOC
C1	D1	U4	B1
Q1	F2	U5	B2
R1	F2	U6	C2
R2	F1	U7	F1
R3	E1		
R4	F2		
R5	F2		
R6	E2		
R7	E2		
R8	E1		
R9	E2		
R10	F2		
U1	F2		
U2	E1		
U3	C1		

SERVICE BLOCK 6
BURST BOARD A3 [6]
BURST NO. CONTROL A9 [7]

THEORY OF OPERATION

General

Refer to Figure 8–6–1, in BURST mode, a preset number of cycles is output by the 8111A, this requires a store or CONTROL COUNTER for the set "BURST NO" and a BURST COUNTER which is loaded with the same number and then counted down (or decremented) by pulses from the VCO (A5) after commencement of the burst.

At the start of a burst sequence, following a trigger signal, the VCO is enabled and outputs cycles as in other modes, pulses (BURST CLOCK) are also fed back to the burst counter to decrement the count to one. A "BURST OFF" signal is produced after this condition is detected and this disables the VCO after completion of the final cycle. During this final cycle the burst counter is re-loaded with the burst number from the control counter.

Board A9, the Burst Number Control, has no significance in the actual burst sequence, it serves to interface the burst number data with the Display board and the rocker switches to A3, it will be described later.

OPERATION

The following operational description of the BURST BOARD A3 is in four sections:

1. The Control Counter
2. Loading the Burst Counter
3. Burst on
4. End of count down – Burst off

Figure 8–6–2 should be referred to as necessary to aid understanding of the descriptions.

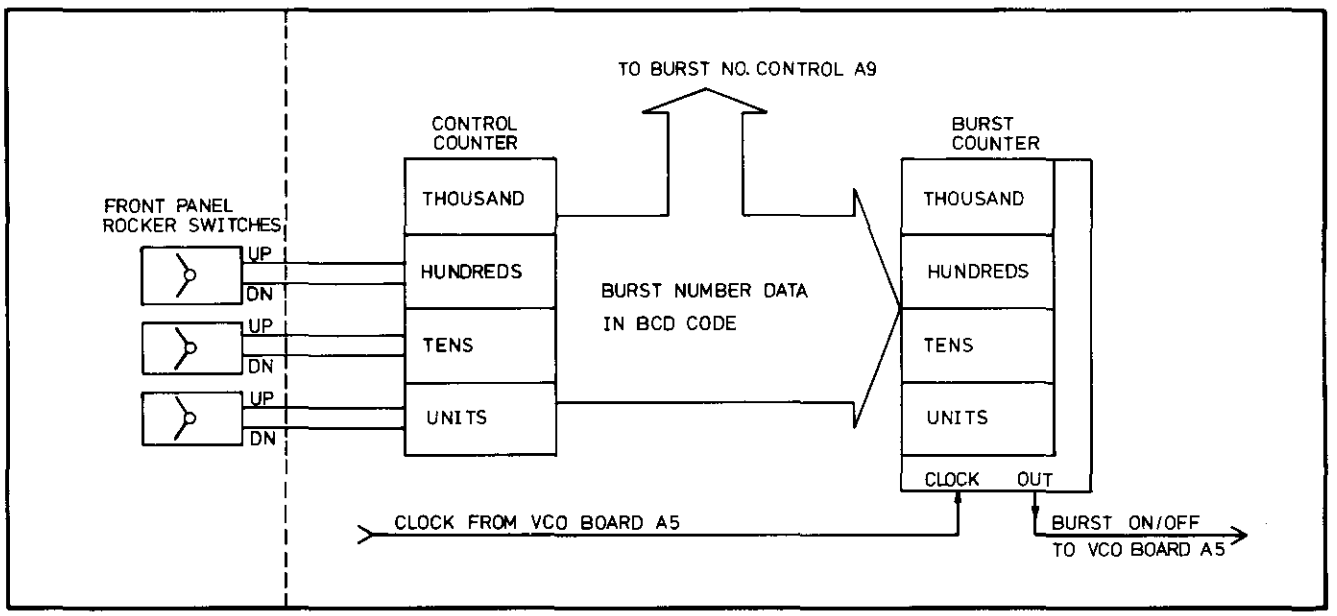

Figure 8–6–1. Burst Block Diagram

1. The Control Counter

This consists of a four stage counter — three cascaded BCD counters U13, U14 and 15 for the "units, tens and hundreds" and a flip-flop U16A for the thousand. At instrument switch on the counter is preset to one (001 displayed when BURST NO buttons pressed) via a signal "PRESET" from the Control board. Operation of the BURST NO rocker switches causes the output of U9C to go high for each "push", the signal is debounced via U10D etc and input, via U6C, to the enabled control counter device. This is done by using the operated rocker switch output (via U6A, B or D) and/or a CARRY output signal to enable, via U4C (units), U10A (tens) or U11D (hundreds), the required counter stage. The output from U6C (control counter clock)will be disabled from clocking the stages (via U11C, B and A) if an unallowed count would result e.g. — if present displayed count is 1985 and the hundreds rocker switch is operated in the 'UP' mode, then only one increment — to 1995 — is possible since the next would be 2005 which is not allowed. The circuit comprising U8D, U9A and B and U10B etc. performs the counter status monitoring and prevents unalowed carry up or down action.

The normal carry up or down function is enabled by U10A, U11D and U4C, C7 and R8 ensure that the counter is set to 001 and not 000 when the "tens" or hundreds count is decremented from 010 or 100 respectively. U8C prevents a 000 setting of the counter by enabling a preset signal for the whole counter to be produced whenever the units switch is pressed to the down position at the 001 counter setting.

The output of U5B enables either an up or down count sequence, in a rocker switch "down" position U5B output is low for DN enable and an "up" position enables UP.

The oscillator is enabled and outputs a pulse train when a rocker switch is pressed either "up or down" for longer than the time constant determined by R3 and C2.

2. Loading the Burst Counter

This is done whenever the existing burst number is changed or a burst has been completed and the number needs to be reloaded for a further one. The Burst Counter contents are automatically decremented to zero during the cycle. Since there are two different loading/or reloading situations they will be separately described as:

2—1 Loading a new Burst Number

2—2 Reloading after burst completion

2—1 Loading a new Burst Number

The negative going edge of the Control Counter clock pulse triggers U21B (pin 9) and its Q output enables the load function of U17 (active low). Delay — R6, C5 and U2D, U22 generate the required clock pulse for U17 which then loads the "units data" into U17. The load enable signal for the "tens", "hundreds" and "thousands" data is U21B $\overline{Q}$.

2—2 Reloading after burst completion

At the end of a burst cycle, when the count has reached 001, the ONE DETECT circuit output (U22C pin 8) goes low and enables the LOAD of U17. On receipt of next positive going clock transition U17 will be reloaded with the units data.

The other counters are reloaded by a pulse via U21A after U20BQ changes from high to low at burst completion.

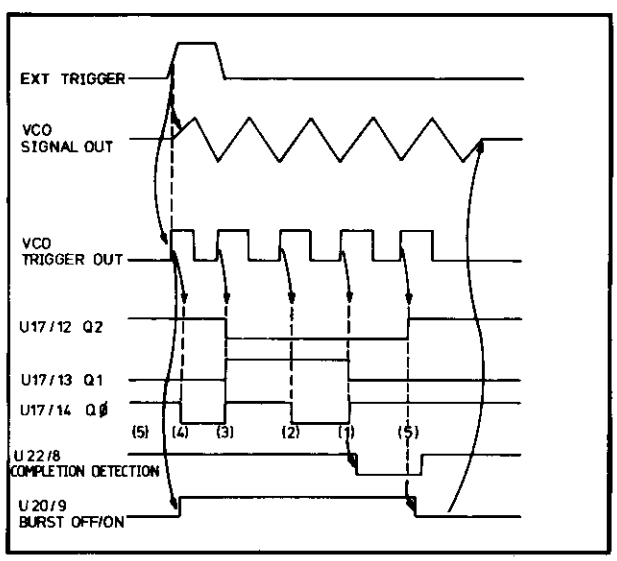

Figure 8—6—2. Burst Timing Diagram (Burst Number = 5)

3. Burst on

On receipt of an trigger signal the VCO (board A5) outputs a signal, this is fed to A6 for ECL to TTL conversion and then input as "BURST CLOCK" to A3U20 and U22C. If the Burst Counter is not set to 001 and no rocker switch is being operated, then U20B D-input is high and the first clock pulse will cause the Q output to go high. The signal BURST ON/OFF is fed back to the VCO and enables the free running mode of A5U1. Also, the burst clock signal now starts to decrement the counter via U22C.

4. End of count down – Burst off

The One Detector circuit output, U22C pin 8, is changed from its normal high to a low level when the stored burst count reaches one (001). Until this point, U22C pin 8 at high has maintain the BURST ON/OFF signal at high (Burst on). At the receipt of the next clock pulse, which initiales the last burst cycle, the level at U22C 'D' is transferred to the Q output so disabling burst via the VCO BURST ON input. This is illustrated by Figure 8–6–2.

BURST NUMBER CONTROL BOARD A9

OPERATION

The function of this board is to control the display of the burst number as set in the control counter of A3. It does this basically by counting the number of cycles output by the Display board DVM oscillator and disabling it when the number equals the set burst number. To help understand how this is achieved it is necessary to understand the basic theory of dual slope integration, and its application in the Display board operation, this is given in Service Block 5.

The timing diagram, Figure 8–6–3 should be referred to when reading the following explanation. The principle of operation is that the DVM IC integrator is first supplied with a fixed input (2.2 V) voltage to enable it to ramp up in the normal manner for 1000 cycles time period. The discharge phase is now started and the oscillator disabled via Q1 when the number of cycles output equals the burst count number.

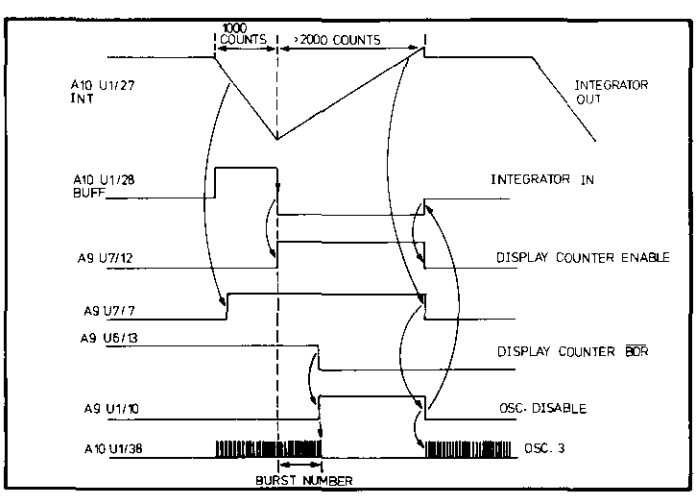

Figure 8–6–3. Burst No. Display Timing Diagram

Since the oscillator has been disabled the normal "end of ramp down" detector circuit within the IC cannot be used (the digital control logic is effectively at standstill without a control clock) and an external circuit, U7B etc., is used instead. U7B functions as a Schmitt trigger and causes Q1 to be switched off, so renabling the oscillator, when the DVM IC integrator output (signal "INT") euqals the threshold level of about 0.1 V. The burst number is now displayed and the count and display sequence repeated as illustrated by Figure 8–6–3.

Devices U2A and B provide a divide by 4 function which is necessary since the DVM IC clock signal is normally divided by 4 internally and the burst number display counter must therefore be supplied with the same frequency.

TROUBLESHOOTING (A3 and A9)

For the purpose of troubleshooting, the complete burst circuitry can be considered as three functional sections:

1. Burst number setting circuitry (rocker switches, oscillator, control counter, carry/borrow logic).
2. Burst Counter, burst completion detection.
3. Burst number control (A9).

To isolate the faulty components the following general troubleshooting information links various possible fault conditions to the most likely cause:

If it is not possible to set the required burst number on the display and at the 8111A output by operating the appropriate rocker switches, then, a fault in the burst number setting circuitry of A3 is the most likely cause. If however, either the display or the output is wrong but not both, then a check on the operation of A3 Control Counter will assist in identifying the likely fault area. This is done by checking whether the outputs of U13 to U16 have the same decimal value as the display readout. If the values differ and the 8111A burst output is correct then suspect board A9, if they are identical but the output burst number is incorrect then the Burst Counter or completion detector are suspect.

Burst Counter

The correct operation of the Burst Counter can be verified with the following test procedure, refer to Figure 8–6–4 for the waveform and timing data.

1. Disconnect A3R10.
2. Set 8111A:

   OPERATING MODE .....NORMAL
   WAVEFORM .....Square
   FREQUENCY RANGE .....100–1000 kHz
   FREQUENCY (VERNIER) .....1000 kHz

3. Confirm that the waveforms and timing data as given in Figure 8–6–4 are correct. Use oscilloscope internal trigger on positive slope setting.

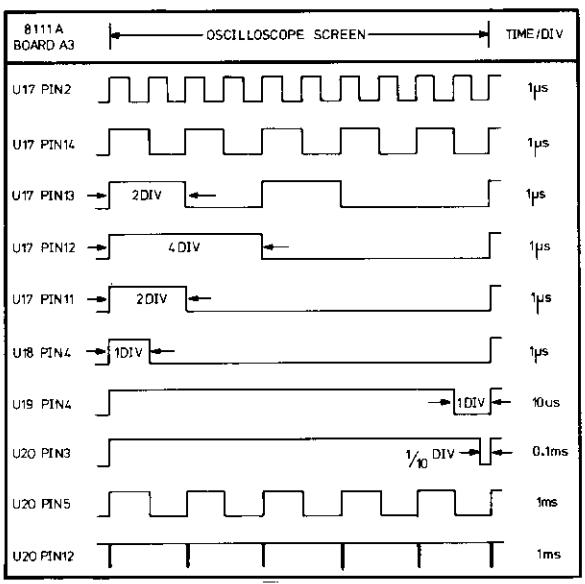

Figure 8–6–4. A3 Troubleshooting Data

Burst No. Control A9

The special "short" extender board should be used when troubleshooting A9, and A9R10 must be disconnected to leave A9Q1 open base. This enables "free run" operation of the Burst No. Control Counter.
Frequency and Duty/Width pushbuttons pressed.

The Schmitt triggers U7A and U7B can be checked for correct operation with the aid of Figure 8–6–5 waveforms.

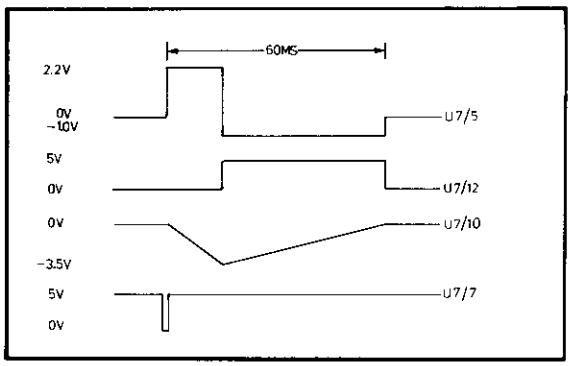

Figure 8–6–5. Burst No. Control A9 Troubleshooting Waveforms

The Burst Number Display Counter operation can be checked with the following test procedure.

1. Connect U7 pin 4 to +5 V. Confirm that U7 pin 12 goes to +5 V.
2. Connect U7 pin 9 to +5 V. Confirm that U7 pin 7 goes to +5 V.
3. Check that the waveform and timing data as given in Figure 8–6–6 is correct . Use oscilloscope internal trigger on positive slope setting.

NOTE: The "spikes" (U6 pin 4 etc.) might need to be verified with the aid of a TTL probe if difficult to see on the oscilloscope screen.

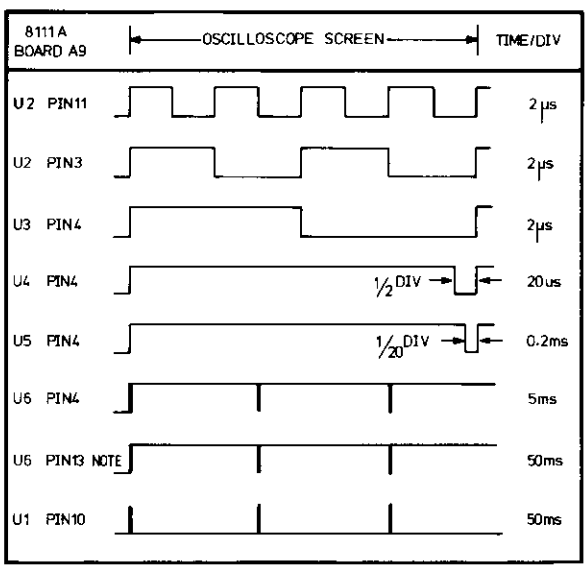

Figure 8–6–6. Burst No. Display Counter Troubleshooting Data

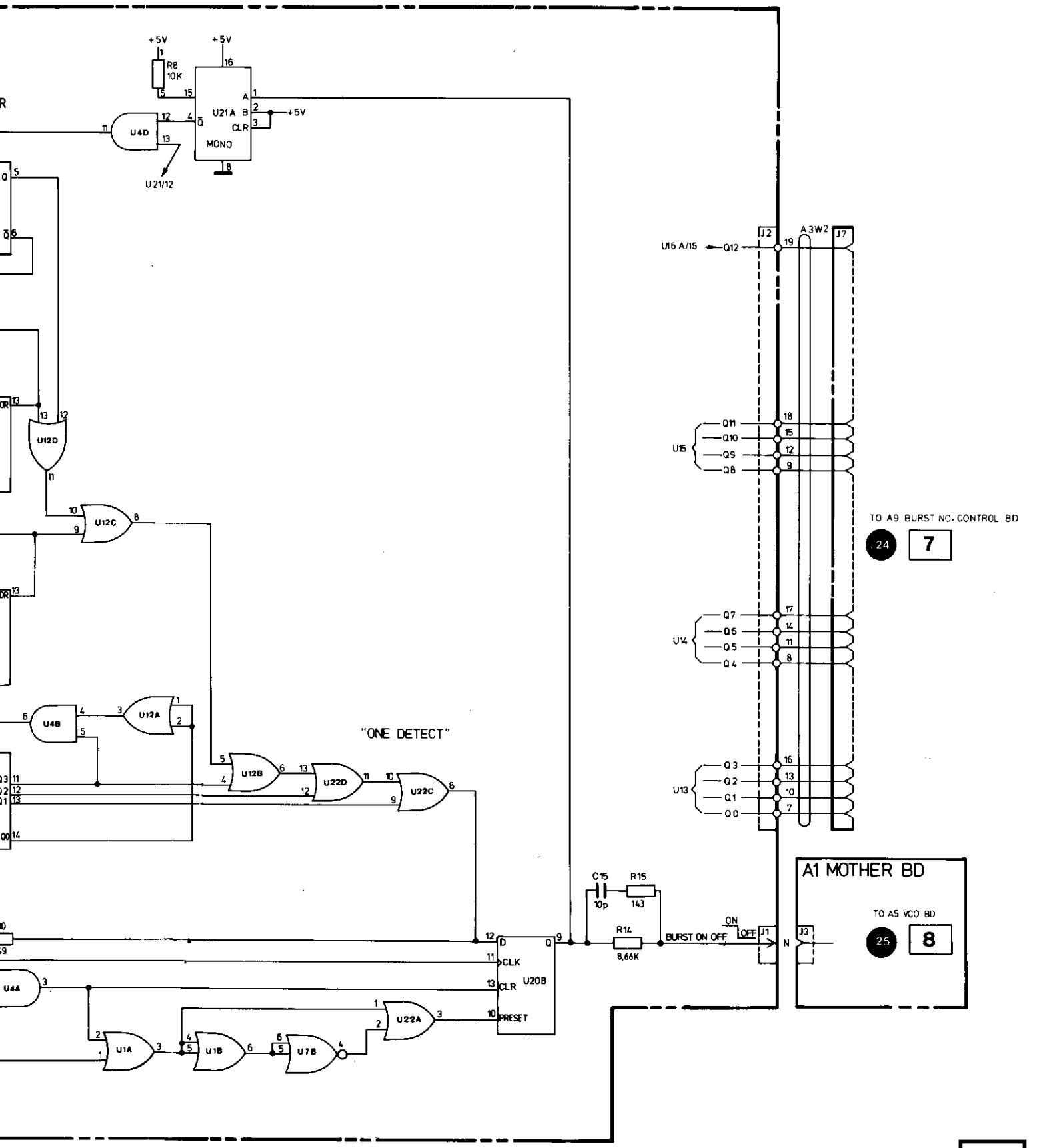

BURST BOARD A3

6

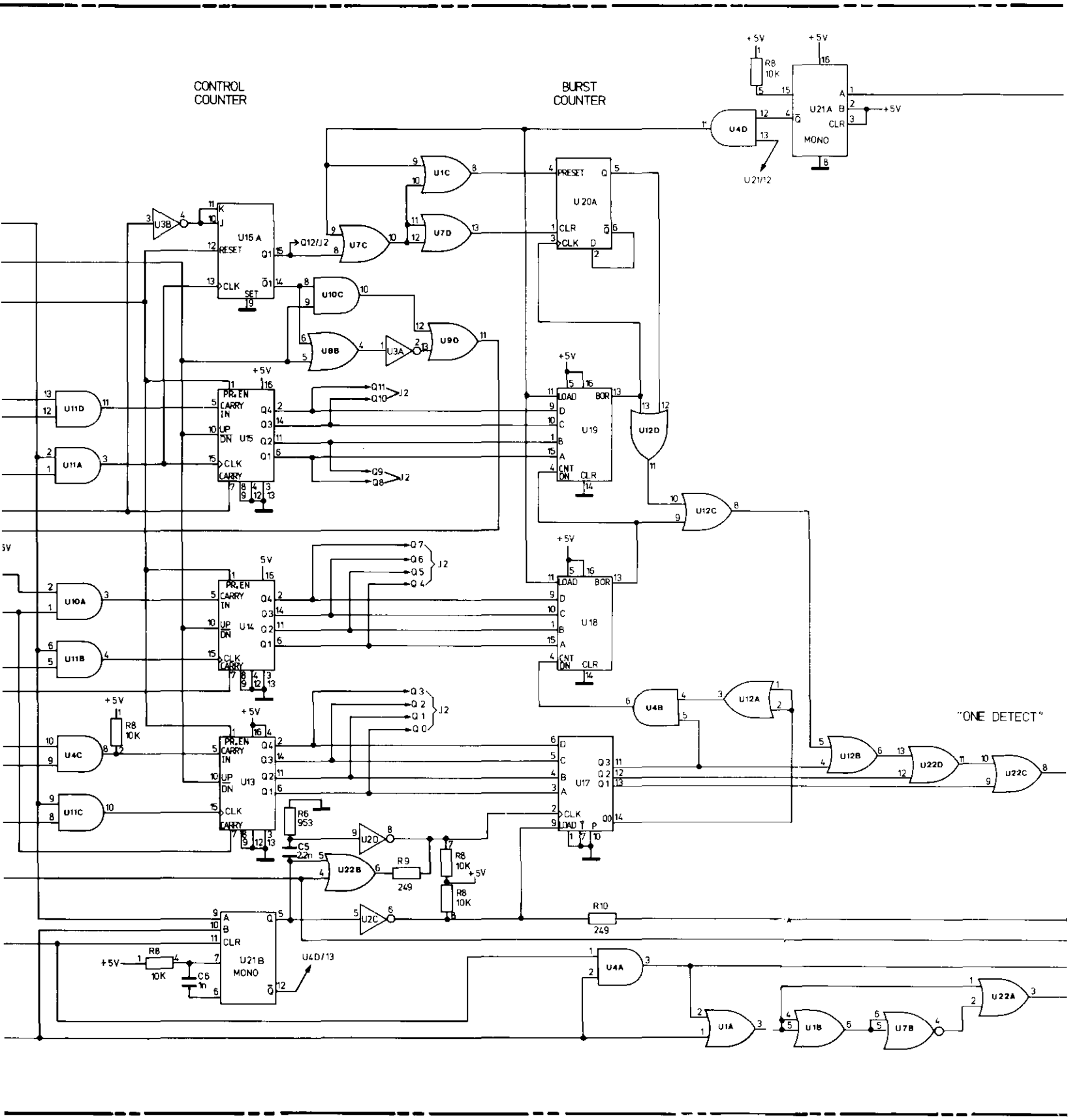
CONTROL COUNTER
BURST COUNTER
"ONE DETECT"
U16 A
U15
U14
U13
U20A
U19
U18
U17
U21A
U21B
MONO
U21/12
U4D/13
Q12/J2
Q11
Q10
Q9
Q8
Q7
Q6
Q5
Q4
Q3
Q2
Q1
Q0
J2
R8 10K
R6 953
C5 2.2n
R9 249
R10 249
C6 1n
+5V

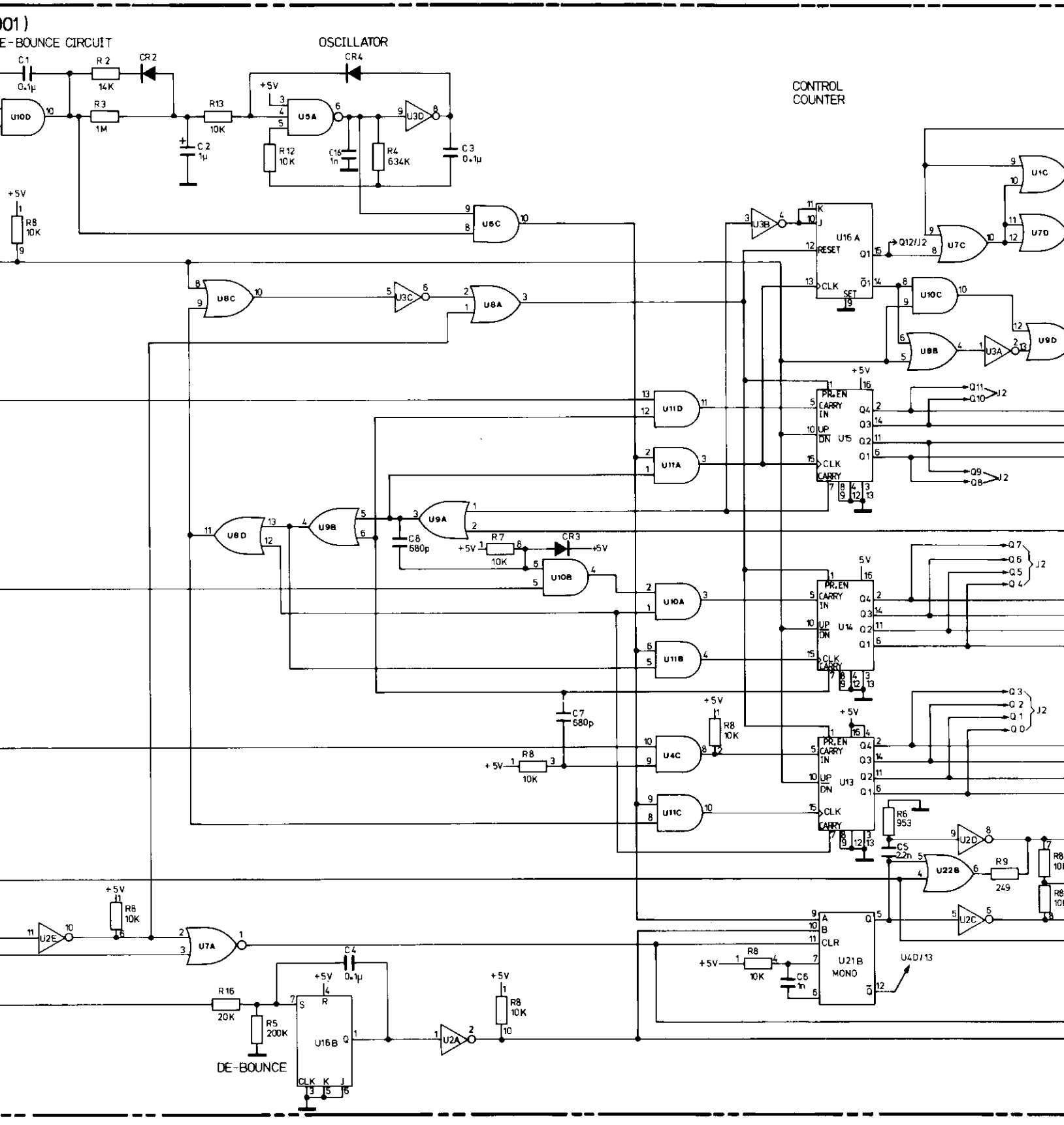
001)
E-BOUNCE CIRCUIT
OSCILLATOR
CONTROL
COUNTER
DE-BOUNCE
C1 0.1µ
R2 14K
CR2
R3 1M
R13 10K
C2 1µ
+5V
U5A
U3D
CR4
R12 10K
C16 1n
R4 634K
C3 0.1µ
U10D
R8 10K
U6C
U8C
U3C
U8A
U3B
U16A
RESET
CLK
SET
Q12/J2
U7C
U1C
U7D
U10C
U8B
U3A
U9D
U11D
U11A
U15
PR.EN
CARRY IN
UP
DN
CLK
CARRY
Q11
Q10
Q9
Q8
U8D
U9B
U9A
C8 680p
R7 10K
CR3
U10B
U10A
U11B
U14
Q7
Q6
Q5
Q4
C7 680p
R8 10K
U4C
U11C
U13
Q3
Q2
Q1
Q0
R6 953
C5 2.2n
U2D
U22B
R9 249
U2C
U2E
U7A
C4 0.1µ
R16 20K
R5 200K
U16B
U2A
U21B
MONO
A
B
CLR
C6 1n
U4D/13

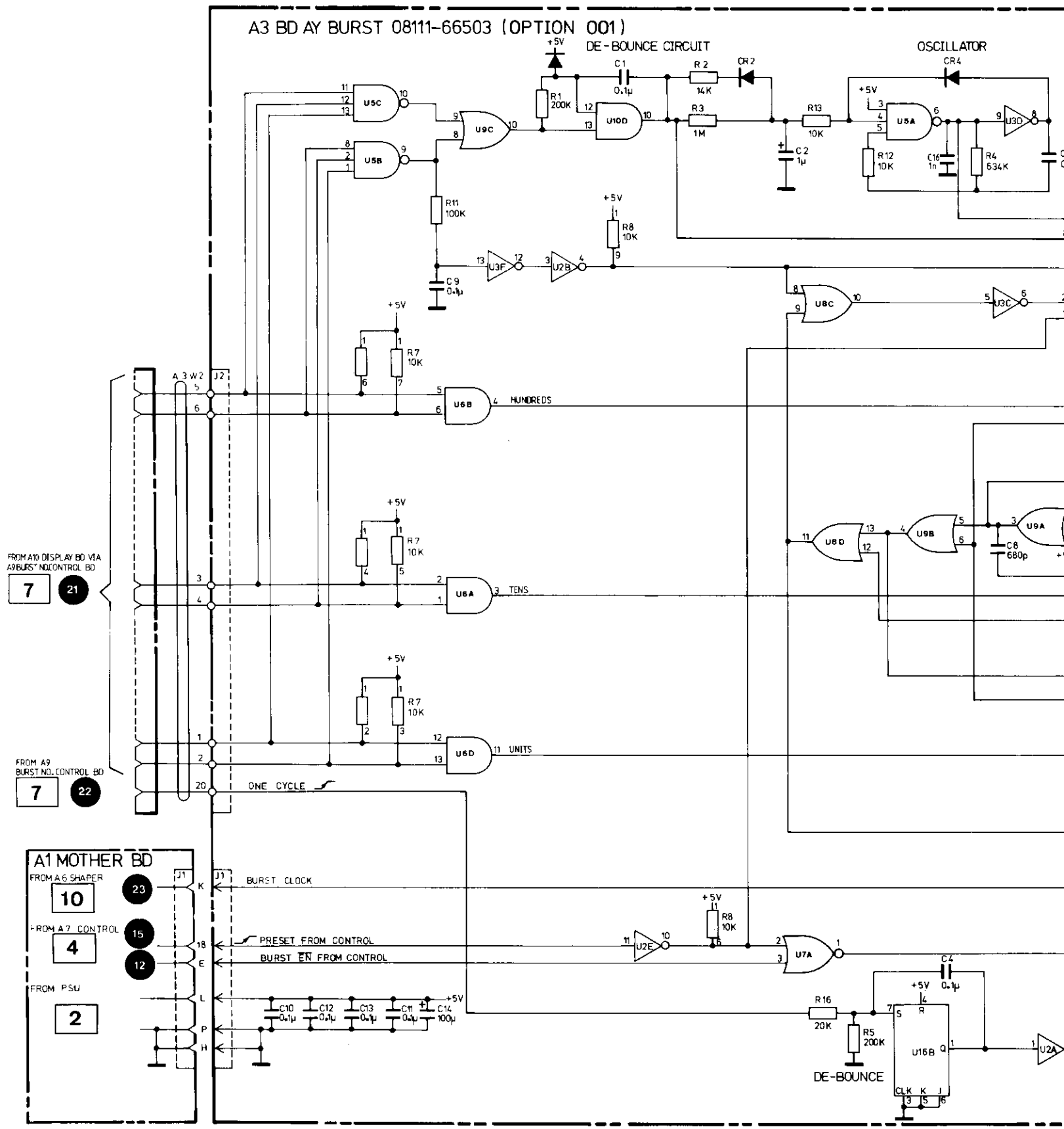
A3 BD AY BURST 08111-66503 (OPTION 001)
DE-BOUNCE CIRCUIT
OSCILLATOR
U5C
U5B
U9C
U10D
U5A
U3D
U3F
U2B
U8C
U3C
U6B
HUNDREDS
U6A
TENS
U6D
UNITS
U8D
U9B
U9A
ONE CYCLE
FROM A10 DISPLAY BD V1A
A9 BURST NO. CONTROL BD
FROM A9
BURST NO. CONTROL BD
A1 MOTHER BD
FROM A6 SHAPER
BURST CLOCK
FROM A7 CONTROL
PRESET FROM CONTROL
BURST EN FROM CONTROL
FROM PSU
U2E
U7A
U16B
U2A
DE-BOUNCE

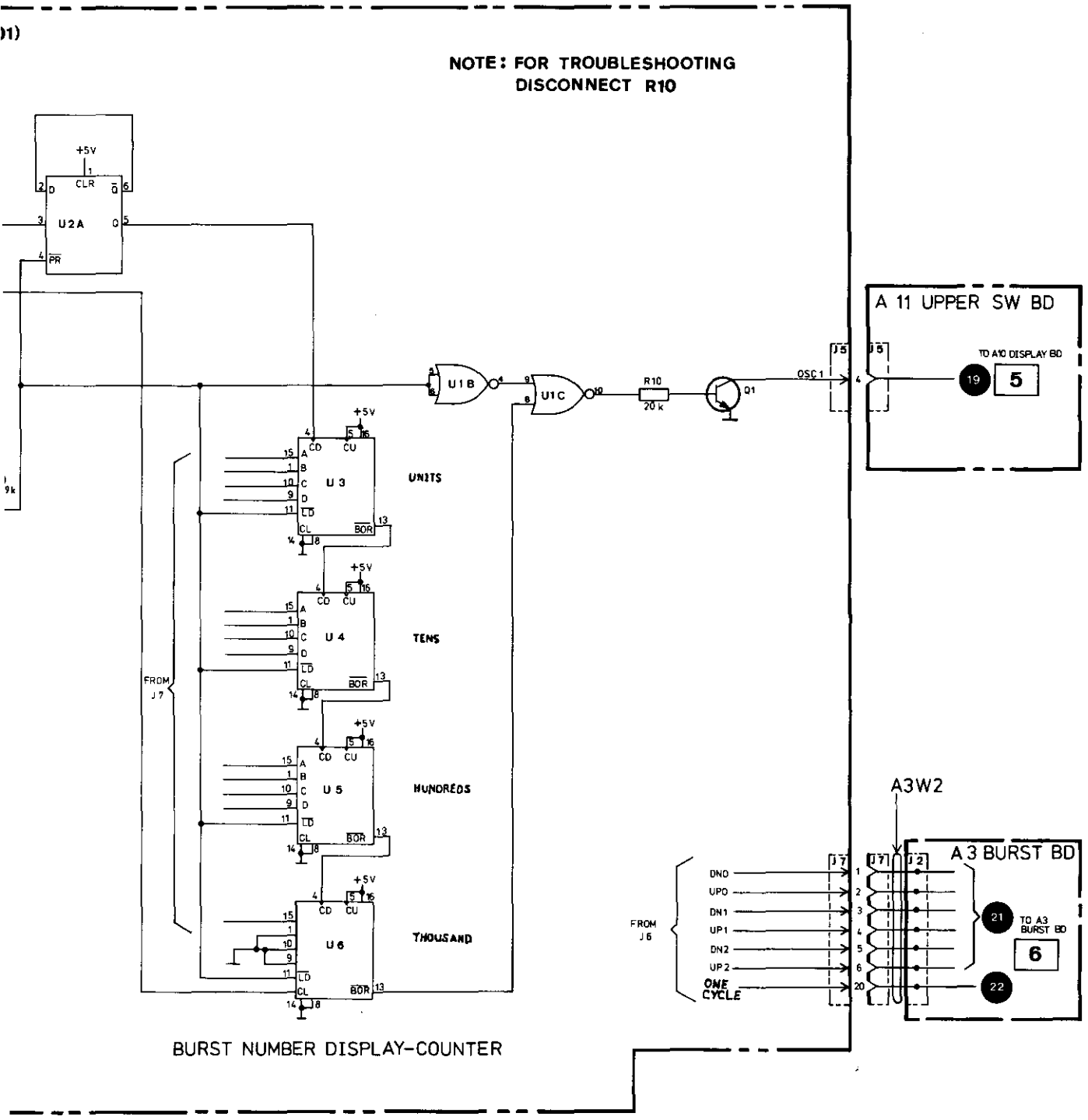

BURST NO. CONTROL A9

7

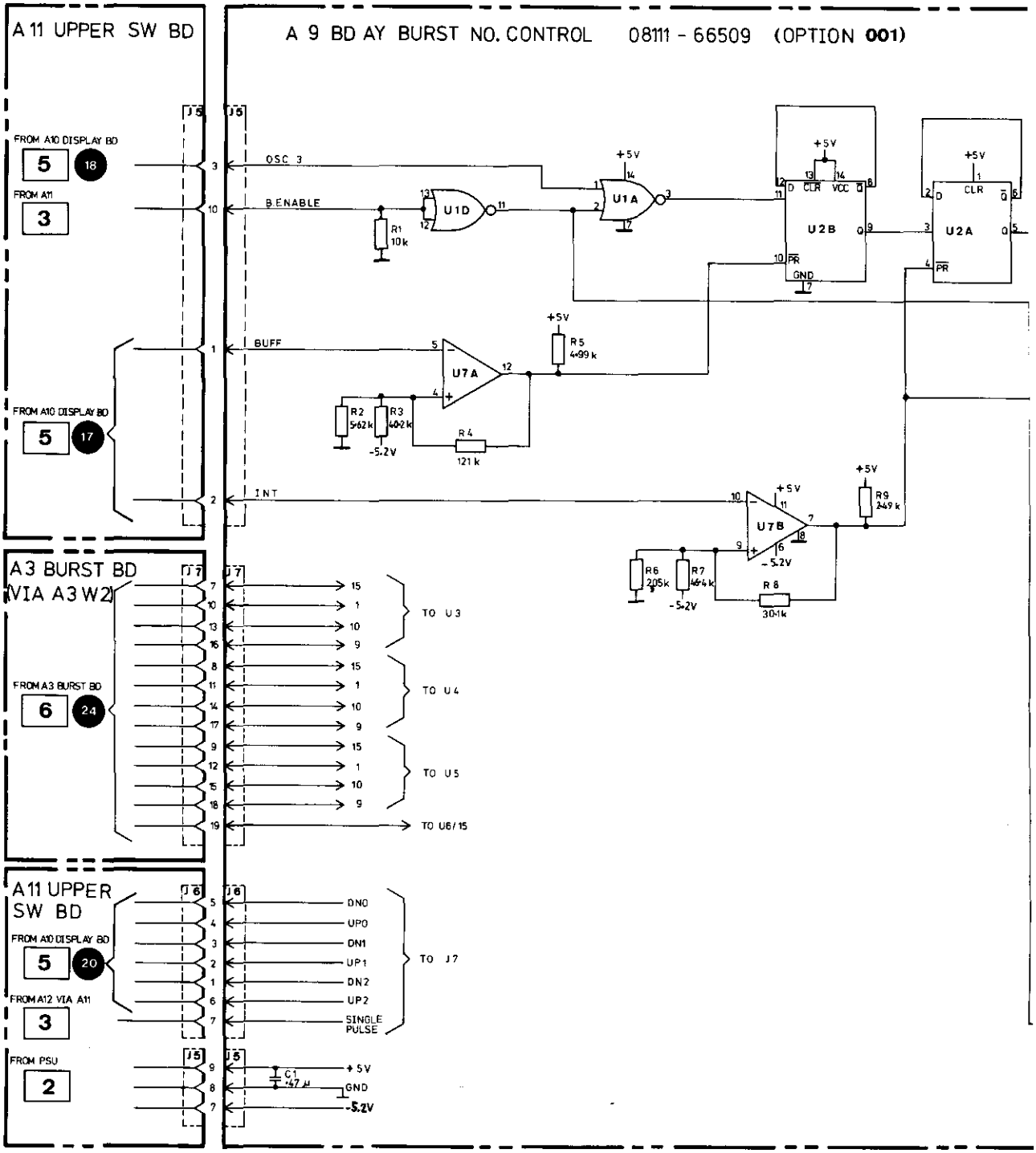
A 11 UPPER SW BD
A 9 BD AY BURST NO. CONTROL 08111 - 66509 (OPTION 001)
FROM A10 DISPLAY BD
5
18
FROM A11
3
OSC 3
B.ENABLE
R1 10k
U1D
U1A
+5V
U2B
U2A
CLR
VCC
GND
PR
BUFF
U7A
R5 4·99 k
R2 5·62 k
R3 40·2 k
R4 121 k
-5.2V
FROM A10 DISPLAY BD
5
17
INT
U7B
R9 249 k
R6 2·05 k
R7 46·4 k
R8 30·1 k
A3 BURST BD
(VIA A3 W2)
FROM A3 BURST BD
6
24
TO U3
TO U4
TO U5
TO U6/15
A11 UPPER
SW BD
FROM A10 DISPLAY BD
5
20
FROM A12 VIA A11
3
DN0
UP0
DN1
UP1
DN2
UP2
SINGLE PULSE
TO J7
FROM PSU
2
C1 ·47 µ
+5V
GND
-5.2V

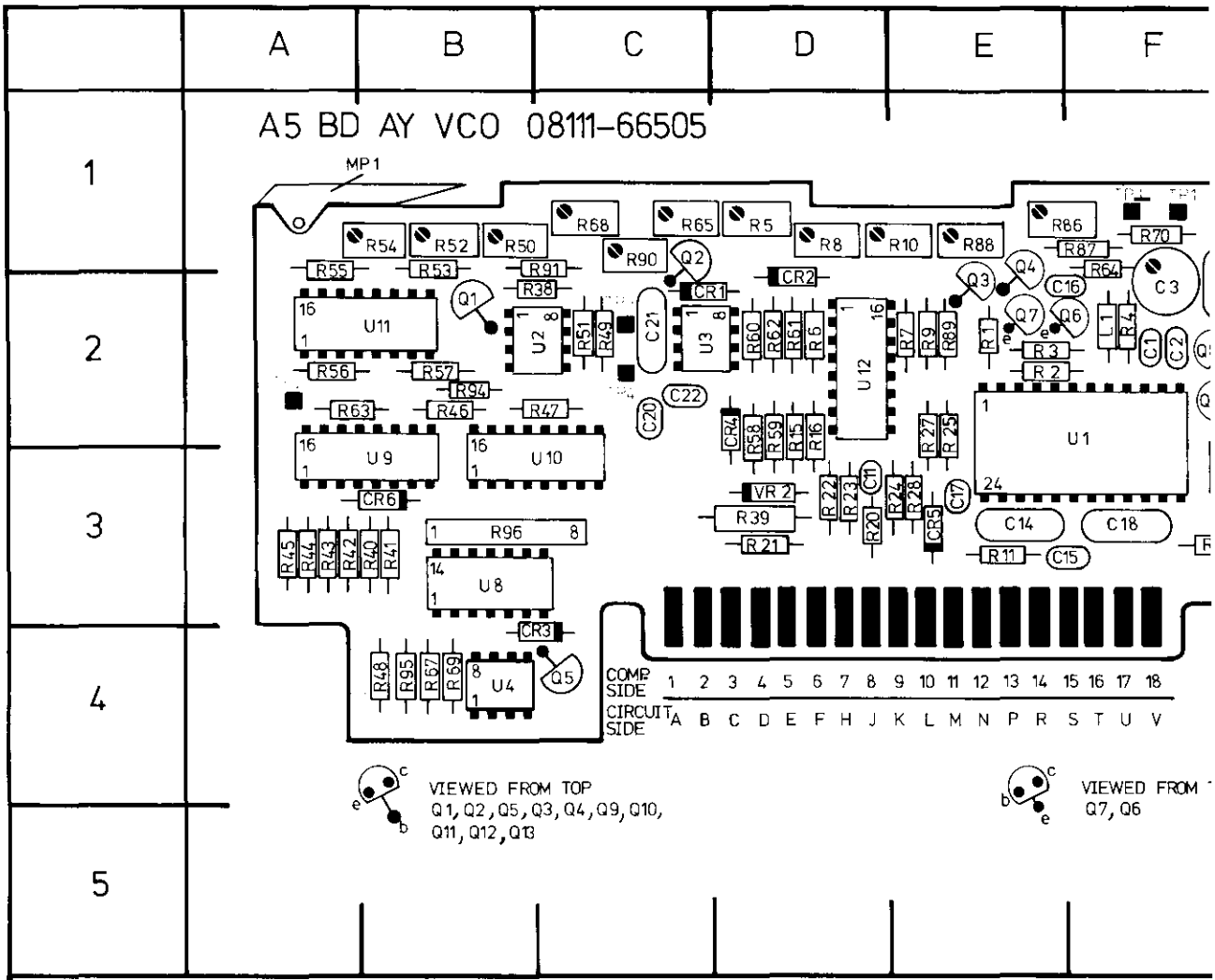

REF DESIG	GRID LOC	REF DESIG	GRID LOC	REF DESIG	GRID LOC	REF DESIG	GRID LOC
C1	F2	C17	E3	Q2	C1	R3	E2
C2	F2	C18	F3	Q3	E2	R4	F2
C3	F2	C20	C2	Q4	E1	R5	D1
C4	F2	C21	C2	Q5	B4	R6	D2
C5	G2	C22	C2	Q6	F2	R7	E2
C6	G2	C24	H2	Q7	E2	R8	D1
C7	G2	CR1	C2	Q8	F2	R9	E2
C8	H2	CR2	D2	Q9	F2	R10	E1
C10	H2	CR3	B4	Q10	G2	R11	E3
C11	D3	CR4	D2	Q11	G2	R13	F3
C13	G3	CR5	E3	Q12	G2	R14	G3
C14	E3	CR6Ü	B3	Q13	G2	R15	D2
C15	E3	L1	F2	R1	E2	R16	D2
C16	E2	Q1	B2	R2	E2	R20	D3

8

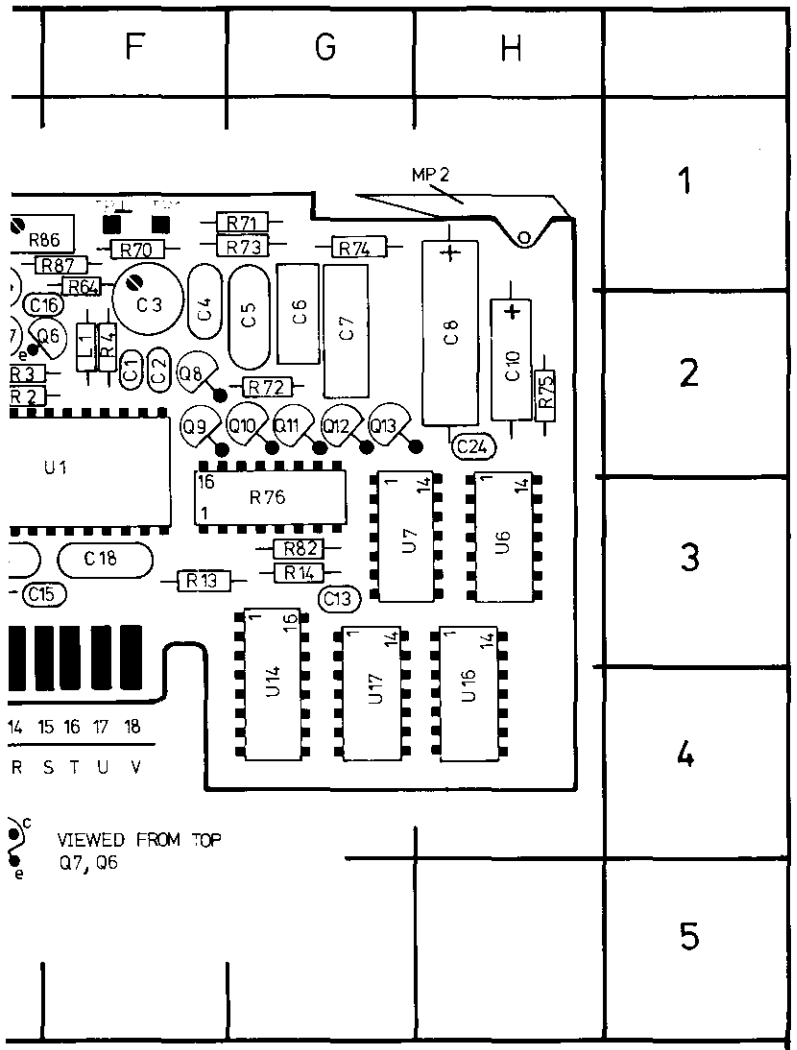

GRID LOC	REF DESIG	GRID LOC	REF DESIG	GRID LOC
E2	R21	D3	R45	A3
F2	R22	D3	R46	B2
D1	R23	D3	R47	B2
D2	R24	D3	R48	A4
E2	R25	E3	R49	C2
D1	R27	E3	R50	B1
E2	R28	E3	R51	C2
E1	R38	B2	R52	B1
E3	R39	D3	R53	B1
F3	R40	B3	R54	B1
G3	R41	B3	R55	A1
D2	R42	A3	R56	A2
D2	R43	A3	R57	B2
D3	R44	A3	R58	D2

REF DESIG	GRID LOC
R59	D2
R60	D2
R61	D2
R62	D2
R63	A2
R64	F2
R65	C1
R67	B4
R68	C1
R69	B4
R70	F1
R71	G1
R72	G2
R73	G1
R74	G1
R75	H2
R76	G3
R82	G3
R86	E1
R87	F1
R88	E1
R89	E2
R90	C1
R91	C1
R94	B2
R95	B4
R96	B3
TP1	F1
TP2	A2
TP3	C2
TP4	C2
TPGND	F1
U1	F2
U2	B2
U3	C2
U4	B4
U6	H3
U7	G3
U8	B3
U9	A3
U10	B3
U11	A2
U12	D2
U14	G4
U16	H4
U17	G4
VR2	D3

SERVICE BLOCK 7
VCO BOARD A5 7

THEORY OF OPERATION

General

The function of the VCO board is to generate the required signal frequency in accordance with either the 8111A front panel settings or an external control voltage. When TRIGGER mode is selected, the output signal repetition rate is controlled by the applied external frequency but the VCO board's operation is different depending on whether the 8111A is in waveform (sine, triangle or square) or pulse mode.

In TRIGGER/waveform function mode the VCO produces the waveform frequency, in accordance with the front panel settings but in TRIGGER/PULSE mode the board serves only as a Schmitt trigger/level shifter to shift the incoming trigger signal for compatibility with the trigger converter circuit of the Width board (A4).

The VCO frequency range is from 1 Hz to 20 MHz (with the capability to reduce to 0.1 Hz in VCO mode – see Table 3–2). The frequency is distributed over 7 decades (from 1 Hz to 10 MHz) and a top 10 – 20 MHz range.

An error detection circuit provides an output signal (in TRIGGER/waveform function mode) whenever an external trigger signal arrives before completion of the current cycle. Reference to Figure 8–7–1 shows that the VCO board comprises a main control IC–U1 and associated external signal and current sources. A range decoder enables selection of a suitable ramp capacitor and also influences, via reference voltages, the current source. A more detailed description of the board's operation will now be given, schematic 8 should be referred to together with the appropriate figures as required.

OPERATION

There are two operating modes for the VCO board – Free Running Mode which includes NORMAL and VCO operation and Triggered Mode which includes TRIGGER, GATE and BURST modes. Although the circuit operation is similar for both modes there are some slight differences which will be described after the general operational description.

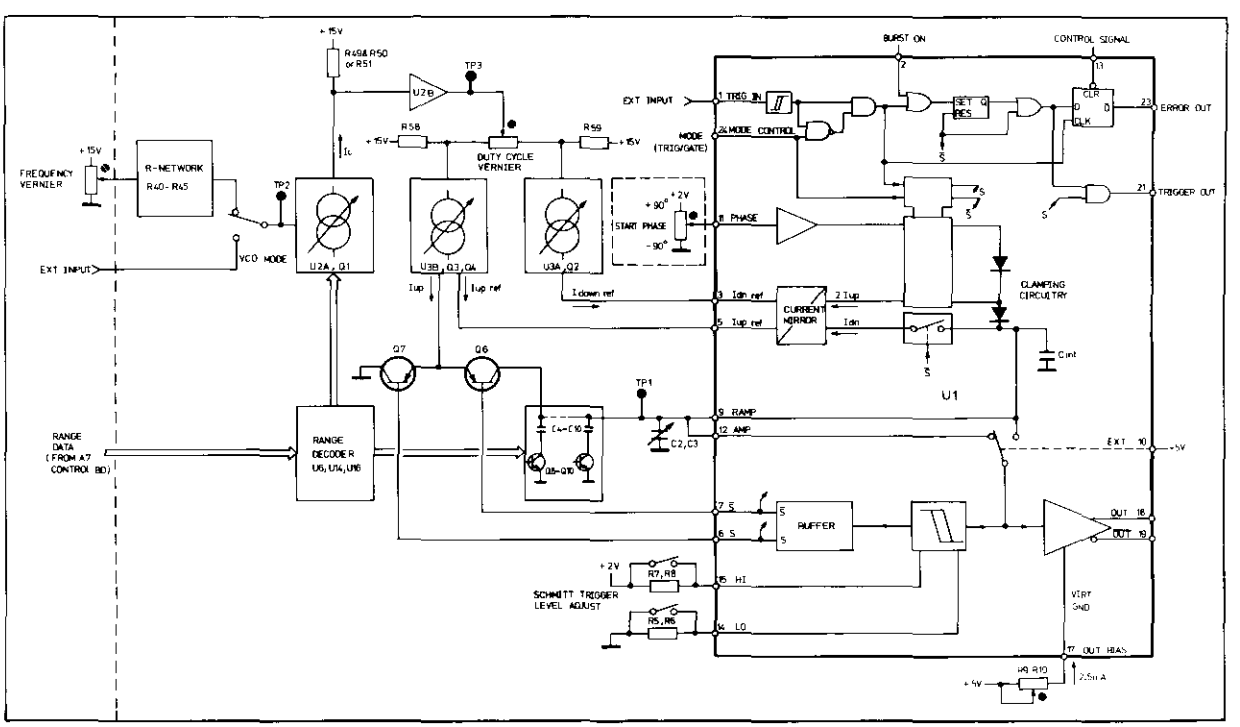

Figure 8–7–1. Simplified VCO Board Block Diagram

In both modes the principle of operation is that a ramp capacitance (one or more of C4–C10) is charged up by I_{up} to the fixed upper threshold level of a Schmitt trigger (within U1) by switching Q6 on. At this point, Q6 is switched off and Q7 on so discharging the capacitance towards ground and also diverting I_{up} to ground until the lower Schmitt threshold is reached, the cycle is then repeated. The charge and discharge sequences are illustrated below:

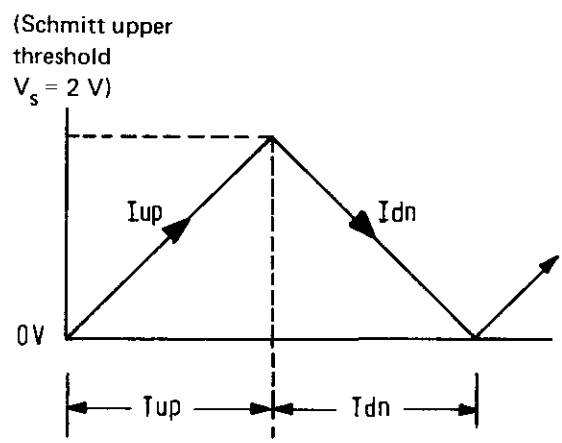

The frequency depends on the two currents and the ramp capacitance. Duty cycle of the waveform is determined by the ratio of $T_{up}/(T_{up} + T_{dn})$ where T_{up} is the time taken to charge up to V_s and T_{dn} is the time taken to discharge to 0 V.

The difference between the two modes is that in Triggered mode an external trigger signal is required at U1 pin 1 to initiate a charge cycle. Also, the ramp capacitors are preset or changed to a voltage determined by the Start Phase potentiometer setting and therefore the charge or "ramp up" process commences from this level. The clamping is achieved via I_{upref} and the current mirror internal to U1 which produces 2 x $I_{up\ ref}$ and the required clamp voltage. A more detailed operational description of the main circuit blocks comprising the VCO board will now be given. Unless otherwise mentioned references are to Figure 8–7–1.

R-Network (R40–R45)

The reference voltage from the front panel FREQUENCY vernier is converted by the network to one of two possible values depending on the operative frequency range i.e. – 1 Hz – 9.99 MHz (decades) or 10–20 MHz (non-decades). The resulting voltage is then used to control U2A, Q1 current source.

Control Current Source (U2A, Q1)

This current source output I_C convertes the output voltage from the R-Network to a +15 V reference voltage (instead of ground referenced). U11 (see schematic 8) enables one of three resistive networks to be selected depending on which of the three indicated frequency range bands is operative. This will be explained in the Range Decoder and Ramp Capacitor section. The selected network limits Ic and therefore the voltage produced across R49/50 or R51 within one of three different ranges.

Duty Cycle Vernier

The output voltage from U2B is fed either via the Duty Cycle vernier potentiometer (used in an inverse mode) to the two constant current sources shown or, directly connected when fixed 50 % duty cycle or pulse mode is selected. Note: in pulse mode the duty cycle potentiometer is used to control pulse width and the trigger output signal from U1 has a fixed 50 % duty cycle.

Current Sources (Iup, Iupref, Idnref)

Current source U3B, Q3, Q4 etc. supplies the range capacitance charging current (I_{up}) via Q6 which is controlled by U1 SW-output. $I_{up\ ref}$ is sued as a reference by the current mirror of U1 to provide the start phase clamp voltage $I_{down\ ref}$ is used as a reference by U1 current mirror to enable the correct discharge or ramp down rate of the previously charged capacitance.

Transistors Q6 and Q7

Q6 is operated as a switch under the control of U1 to supply charging current to the ramp capacitors. Q7, whose operation is always complementary to Q6, serves to bipass current I_{up} to ground at the end of the ramp up period (I_{up} flows constantly).

Range Decoder and Range Capacitors 's (refer to (refer to schematic 8 and Figure 8–7–1)

The range data from A7 Control board is decoded by U14/U16 and used to enable the appropriate range capacitors. Also, depending on which of the three frequency bands (1 Hz – 1 MHz, 1 – 10 MHz or 10 – 20 MHz) is operative pre-limiting of control current Ic within one of three-ranges is done via U11, e.g. a frequency setting of 50 KHz is in band 1 of 1 Hz –

1 MHz, U11 will therefore select the frequency pre-ranging resistive network R55/R54.

The range capacitors are enabled by transistor switches Q8–Q13. C2 and C3 are always enabled and C4–C10 are sequentially enabled in an additive or summing sequence. For the two fastest frequency ranges only C2 and C3 are operative, the 10–20 MHz value being achieved by increasing the available ramp current. This is done by selecting the R56 network which results in maximum Ic and therefore maximum control voltage being available. For the 1–10 MHz range the Ic is reduced via R52/R53 network and therefore the ramp current is reduced. All other ranges use R54/R55 and have the same ramp current control voltage and ramp current limits. For the 0.1 – 1 MHz range C2, C3 and C4 are enabled, for 10–100 KHz C2, C3, C4 and C5 are enabled etc. The complete range capacitor selection data is given in Table 8–7–4. in the Troubleshooting section.

Schmitt Trigger Level Adjust

The two trigger levels are fixed at 0 V and +2 V for all frequency ranges except the two fastest when they are changed by switching in external resistors.

TROUBLESHOOTING

1. General Troubleshooting Information
2. Analogue Data
3. Digital Data

1. General Troubleshooting Information:

It is suggested that troubleshooting the VCO board is started at TP 1 since it is possible to confirm, by the presence of either a triangular waveform or a constant dc level as shown, that particular circuit components are operating correctly. For all operating modes of the 8111A except TRIGGER/PULSE the following details apply:

Modes

A. (free running) NORMAL, VCO (50 % DUTY CYCLE)

Waveshape at TP 2.

0 V and +2 V apply for frequencies between 1 Hz – 1000 KHz for frequencies 1 MHz – 20 MHz values are slightly changed,

b. (Triggered) TRIGGER, GATE, BURST

When there is no external trigger signal present the voltage at TP 1 should be fixed at between 0 and 2 V depending on the position of the START PHASE potentiometer.

–90° start phase 0 V approx.
0° start phase 1 V approx.
+90° start phase 2 V approx.

In TRIGGER/PULSE mode the VCO board works only as a Schmitt trigger/level shifter with the external trigger signal passing through U1 and being made compatible with circuitry on board A4. If the fault appears to originate from the VCO board then check that U1 pin 13 is clamped at TTL low since, if not,then the input trigger signal will not be transferred to U1 pin 21 (Trigger Out).

If the test condition for the triggered modes (B) is wrong then check whether current source U33, Q3, Q4 is operating correctly, if so and waveshape for mode A is correct then U1 is suspect. Ensure that problem is not with Q3 and that Q6, Q7 are not faulty before replacing U1.

If checks show that the correct test results at TP1 do not occur then the following faultfinding information should help to isolate the faulty component. The voltages given are referenced to ground unless otherwise stated.

2. Analogue Data:

① Referring to Figure 8–7–2. and Schematic 8, it can be seen that the voltage at TP2 comes from either the FREQUENCY potentiometer or, when in VCO mode, the EXT INPUT connector. When not in VCO mode, adjustment of the FREQUENCY vernier should produce the following values:

Vernier position:	CCW	CW
TP2 voltage:	< 1 V	> 10 V
or:	< 1 V	> 2 V (for 10–20 MHz range)

② The voltage at TP 3 is referenced to +15 V (TP4) and controls the current sources I_{up}, I_{upref} and $I_{down\ ref}$. Adjustment of the FREQUENCY/vernier should produce the values shown in Table 8–7–1.

IC Current Source

③ The current source converts the input voltage from either the FREQUENCY vernier or the EXT INPUT (in VCO mode). The voltage, which is referenced to ground, is converted to a new value referenced to +15 V. A check on the correct operation of the complete current source circuit of U2, Q1 etc. can be done by confirming the values given in Table 8–7–2.

Table 8–7–1. Test Voltages for Current Sources

	Vernier position		Applicable Ranges and Duty Cycle
	CCW	CW	
TP3 Voltage swing	–0.1 V	–1.4 V	(1 Hz–1 MHz Ranges, fixed 50 % DTY)
	–0.6 V	–7.8 V	(1 Hz–1 MHz Ranges, variable DTY)
	–0.26 V	–3.1 V	(1 Hz–10 MHz range) fixed 50 % DTY
	–2.6 V	–6.4V	(10 – 20 MHz Range) fixed 50 % DTY
The given values are referenced to +15 V (TP4). Tolerance: ± 10 %.			

Table 8–7–2. Voltage drops across Range resistors

Frequency Range	Selected R (Operative Resistors)	Freq. vern. pos.:	CCW	CW
1 Hz – 1 MHz	R54/55	voltage drop	0.45 V	5.5 V
1 – 10 MHz	R52/53		0.45 V	5.5 V
10 – 20 MHz	R56		0.45 V	1.1 V
Tolerance: 10 %		given values are for fixed 50 % DUTY CYCLE		

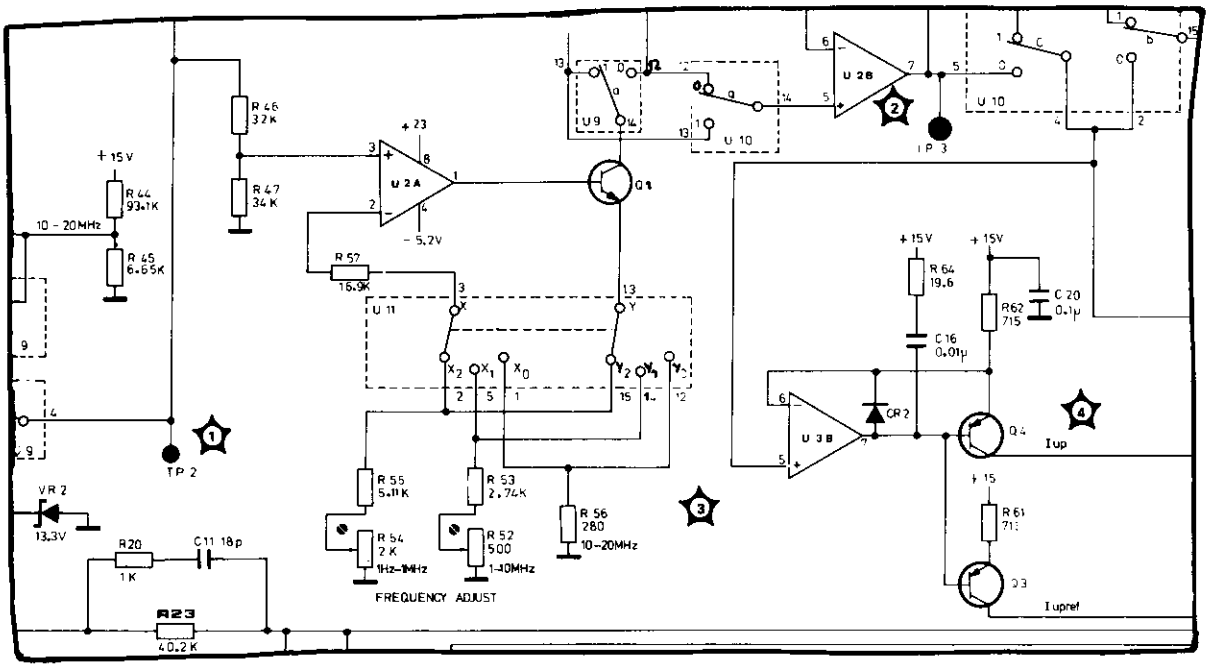

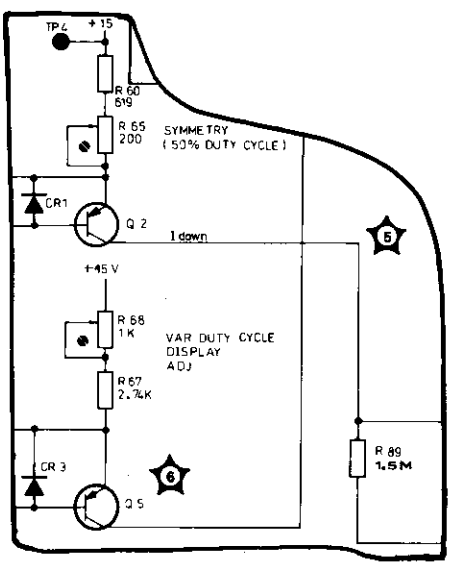

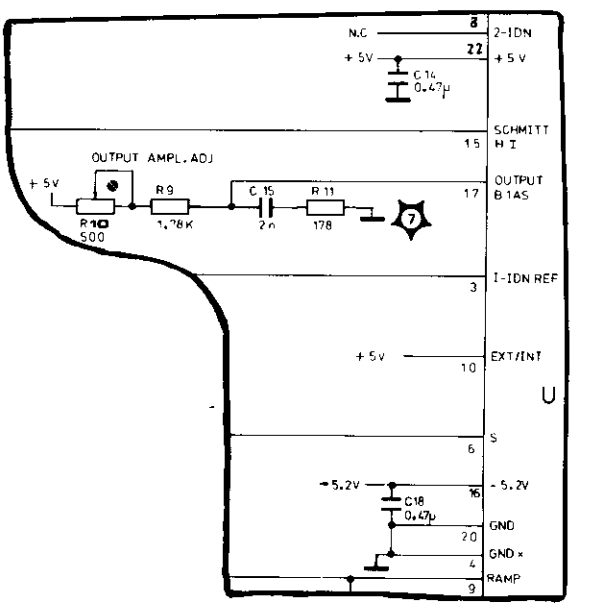

Figure 8–7–2. Troubleshooting Test Points

I_{up} Current Source

4 The I_{up} current may be checked by connecting a current meter between the collector of Q4 and ground (therefore routing I_{up} to ground). Set the 8111A to TRIGGER mode and fixed 50 % DUTY. Verify that Q6 is switched on and Q7 off.

Check, when the FREQUENCY vernier is adjusted, that the values are as in Table 8–7–3.

$I_{downref}$ Current Source

5 $I_{downref}$ can be measured (after removing U1 from its connector) by connecting a current meter between Q2 collector and ground. The values and test conditions for I_{down} are as given in Table 8–7–3 previously.

Variable Duty Cycle Display Current Source

6 The current source U4, Q5 etc. outputs a current which is proportional to I_{up}, the resulting voltage drop produced across A11R18 is then used to produce the displayed DUTY CYCLE percentage value. The circuit operation can be checked by setting the 8111A to fixed 50 % DUTY and checking the voltage at Q5 collector. The value should change as shown when the FREQUENCY vernier is adjusted:

Output Bias Control Current

7 This current, which controls the output amplifier of U1 is typically 2.5 mA and pin 17 of U1 must be at 0 V (virtual ground).

Table 8–7–3. I_{up} Values

	Vernier Position		Applicable Frequency Ranges
	CCW	CW	
Current	0.14 mA	1.9 mA	(1 Hz – 1 MHz Ranges)
	0.36 mA	4.3 mA	(1 MHz – 10 MHz Range)
	3.6 mA	8.9 mA	(10 MHz – 20 MHz Range)

Tolerance: ± 10 %.

Table 8–7–4.

	Vernier Position		Applicable Frequency Range
	CCW	CW	
Voltage at the collector of Q5:	70 mV	0.87 V	(1 Hz – 1 MHz Ranges)
	0.15 V	1.9 V	(1 MHz – 10 MHz Range)
	1.6 V	4.0 V	(10 MHz – 20 MHz Range)

Tolerance: ± 10 %.

3. Digital Data

If the fault appears to be related to range capacitor selection i.e. a digital data decoding problem then use Table 8–7–4 to verify that the appropriate devices are operating correctly.

The truth table of the other digital devices are given on schematic 8.

Table 8–7–5. Range Capacitor Selection Truth Table

Frequency Range	U14 pin No.										U16 pin No.			U17 pin No.		U16 pin No.	Selected Capacitors * (C2 and C3 are selected in all ranges)
	3	2	1	15	14	13	12	11	10	9	11	3	8	11	8	6	
10 – 20 MHz	0	0	0	0	1	1	1	1	1	1	0	0	0	0	0	0	*
1 – 10 MHz	0	0	1	1	0	1	1	1	1	1	0	0	0	0	0	0	*
0.1 – 1 MHz	0	1	0	1	1	0	1	1	1	1	0	0	0	0	0	1	C4
10 – 100 KHz	0	1	1	1	1	1	0	1	1	1	0	0	0	0	1	1	C4, C5
1 – 10 KHz	1	0	0	1	1	1	1	0	1	1	0	0	0	1	1	1	C4–C6
0.1 – 1 KHz	1	0	1	1	1	1	1	1	0	1	0	0	1	1	1	1	C4–C7
10 – 100 Hz	1	1	0	1	1	1	1	1	1	0	0	1	1	1	1	1	C4–C8
1 – 10 Hz	1	1	1	1	1	1	1	1	1	1	1	1	1	1	1	1	C4–C10

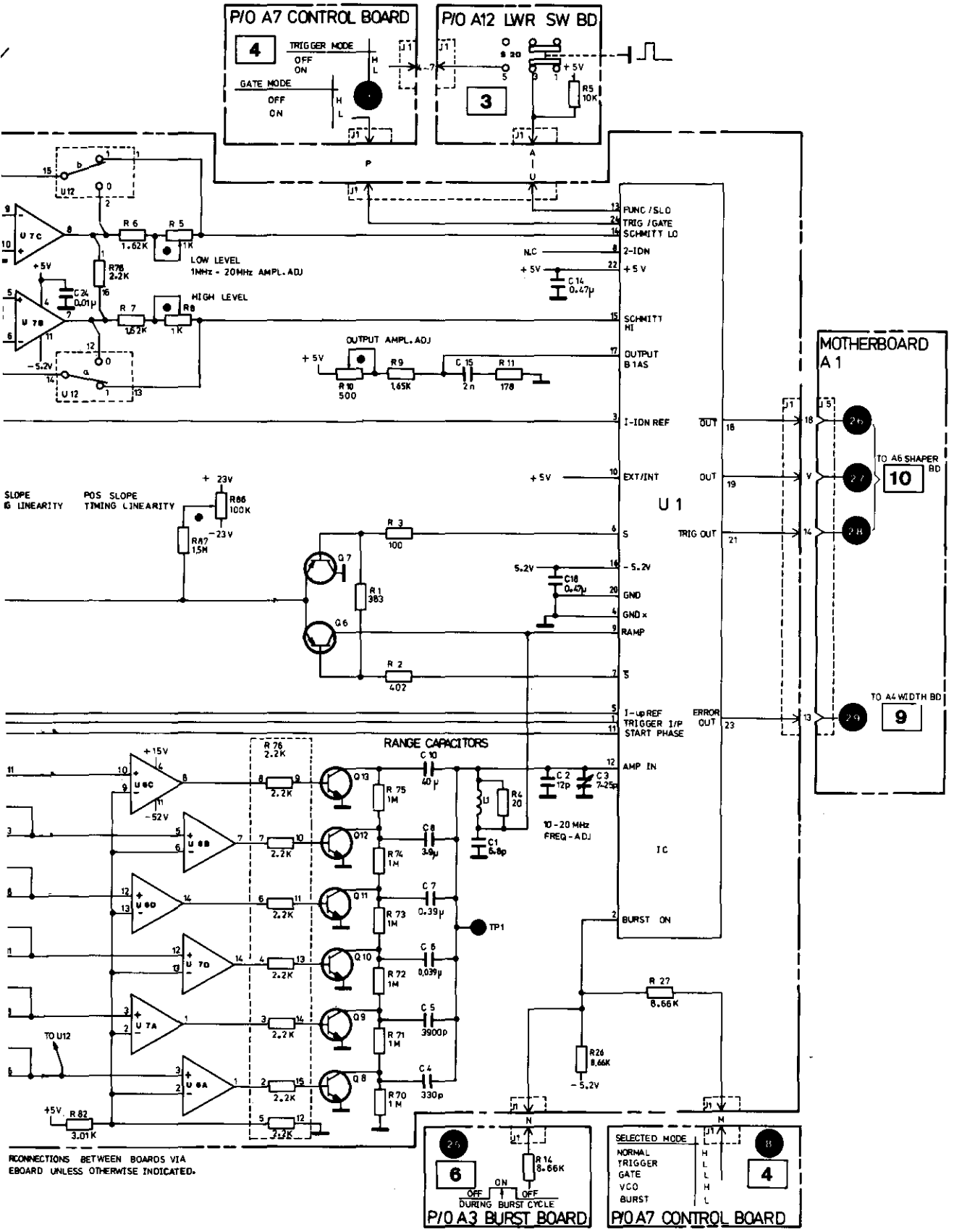

VCO BOARD A5 **8**

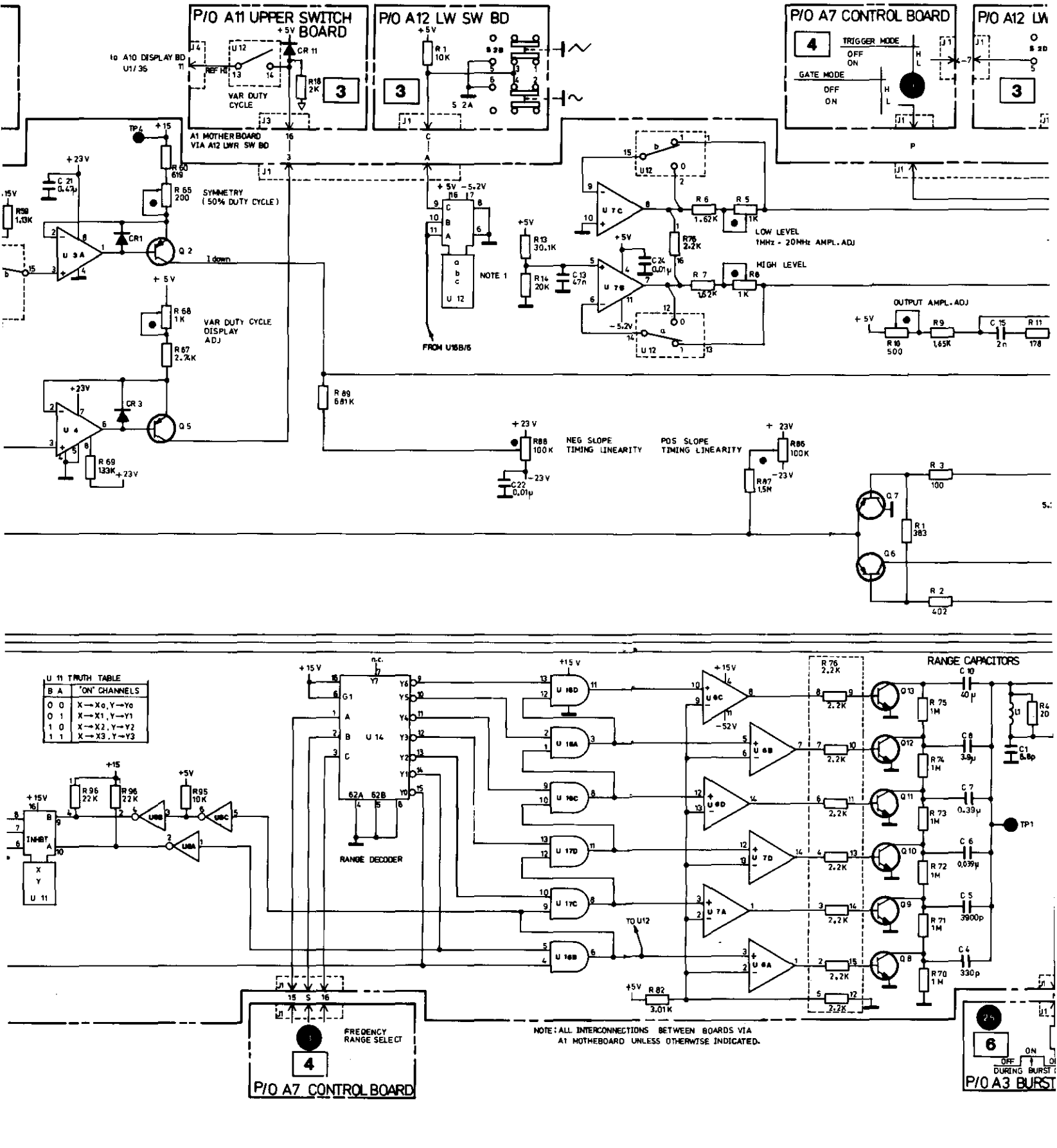
P/O A11 UPPER SWITCH BOARD
P/O A12 LW SW BD
P/O A7 CONTROL BOARD
P/O A12 LW
to A10 DISPLAY BD U1/35
VAR DUTY CYCLE
A1 MOTHERBOARD VIA A12 LWR SW BD
SYMMETRY (50% DUTY CYCLE)
I down
VAR DUTY CYCLE DISPLAY ADJ
NOTE 1
FROM U16B/5
TRIGGER MODE
OFF
ON
GATE MODE
LOW LEVEL
1MHz - 20MHz AMPL. ADJ
HIGH LEVEL
OUTPUT AMPL. ADJ
NEG SLOPE TIMING LINEARITY
POS SLOPE TIMING LINEARITY
U 11 TRUTH TABLE
B A 'ON' CHANNELS
0 0 X→X0, Y→Y0
0 1 X→X1, Y→Y1
1 0 X→X2, Y→Y2
1 1 X→X3, Y→Y3
RANGE DECODER
RANGE CAPACITORS
TO U12
FREQENCY RANGE SELECT
NOTE: ALL INTERCONNECTIONS BETWEEN BOARDS VIA A1 MOTHEBOARD UNLESS OTHERWISE INDICATED.
P/O A7 CONTROL BOARD
P/O A3 BURST

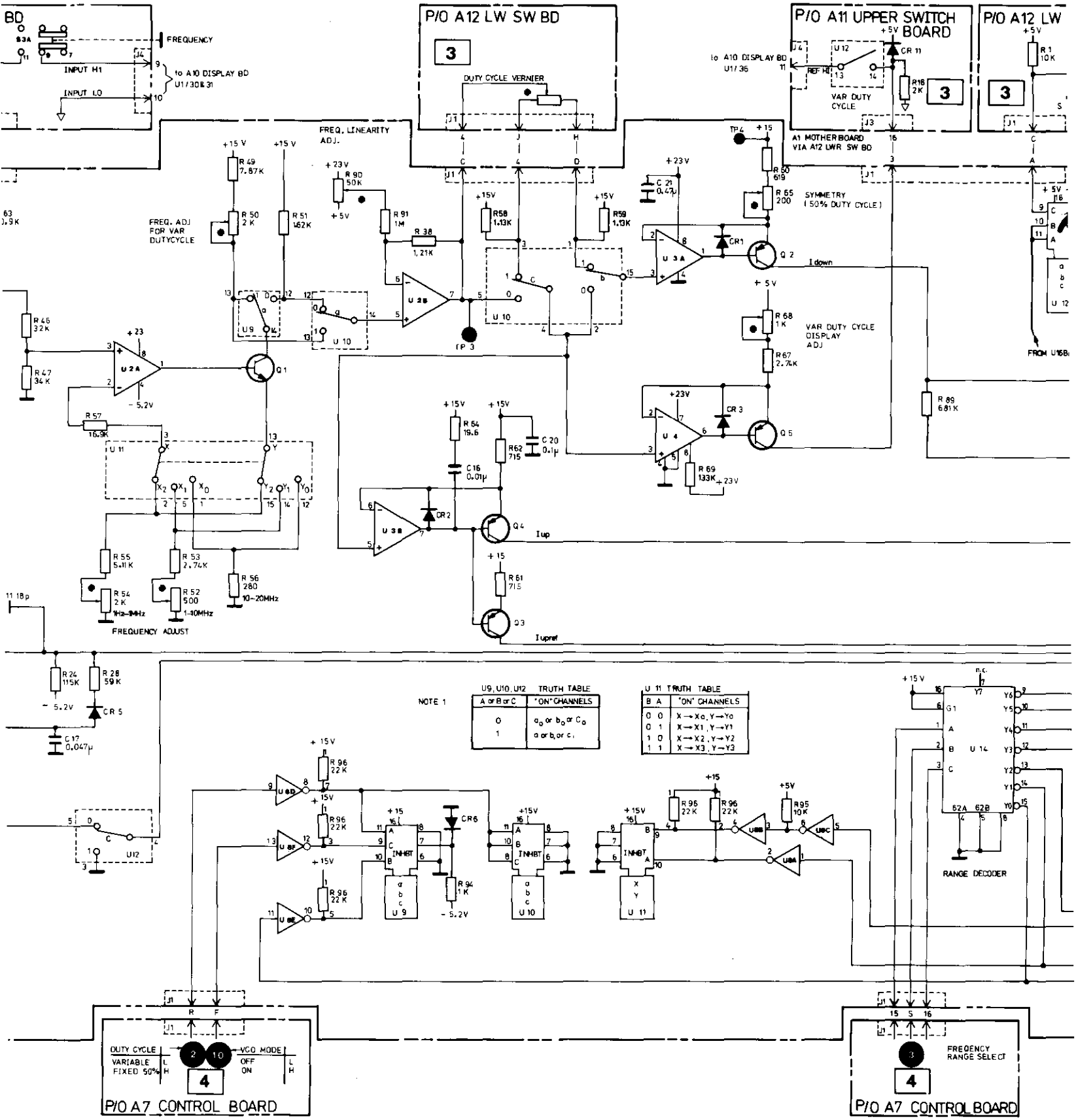
P/O A12 LW SW BD
P/O A11 UPPER SWITCH BOARD
P/O A12 LW
FREQUENCY
INPUT HI
INPUT LO
to A10 DISPLAY BD U1/30 & 31
DUTY CYCLE VERNIER
FREQ. LINEARITY ADJ.
FREQ. ADJ FOR VAR DUTYCYCLE
to A10 DISPLAY BD U1/36
VAR DUTY CYCLE
A1 MOTHERBOARD VIA A12 LWR SW BD
SYMMETRY (50% DUTY CYCLE)
VAR DUTY CYCLE DISPLAY ADJ
FROM U16B
FREQUENCY ADJUST
Idown
Iup
Iupref
U9, U10, U12 TRUTH TABLE
A or B or C | "ON" CHANNELS
0 | a0 or b0 or c0
1 | a or b or c
U 11 TRUTH TABLE
B A | "ON" CHANNELS
0 0 | X→X0, Y→Y0
0 1 | X→X1, Y→Y1
1 0 | X→X2, Y→Y2
1 1 | X→X3, Y→Y3
NOTE 1
RANGE DECODER
DUTY CYCLE
VARIABLE
FIXED 50%
VCO MODE
OFF
ON
P/O A7 CONTROL BOARD
FREQENCY RANGE SELECT
P/O A7 CONTROL BOARD

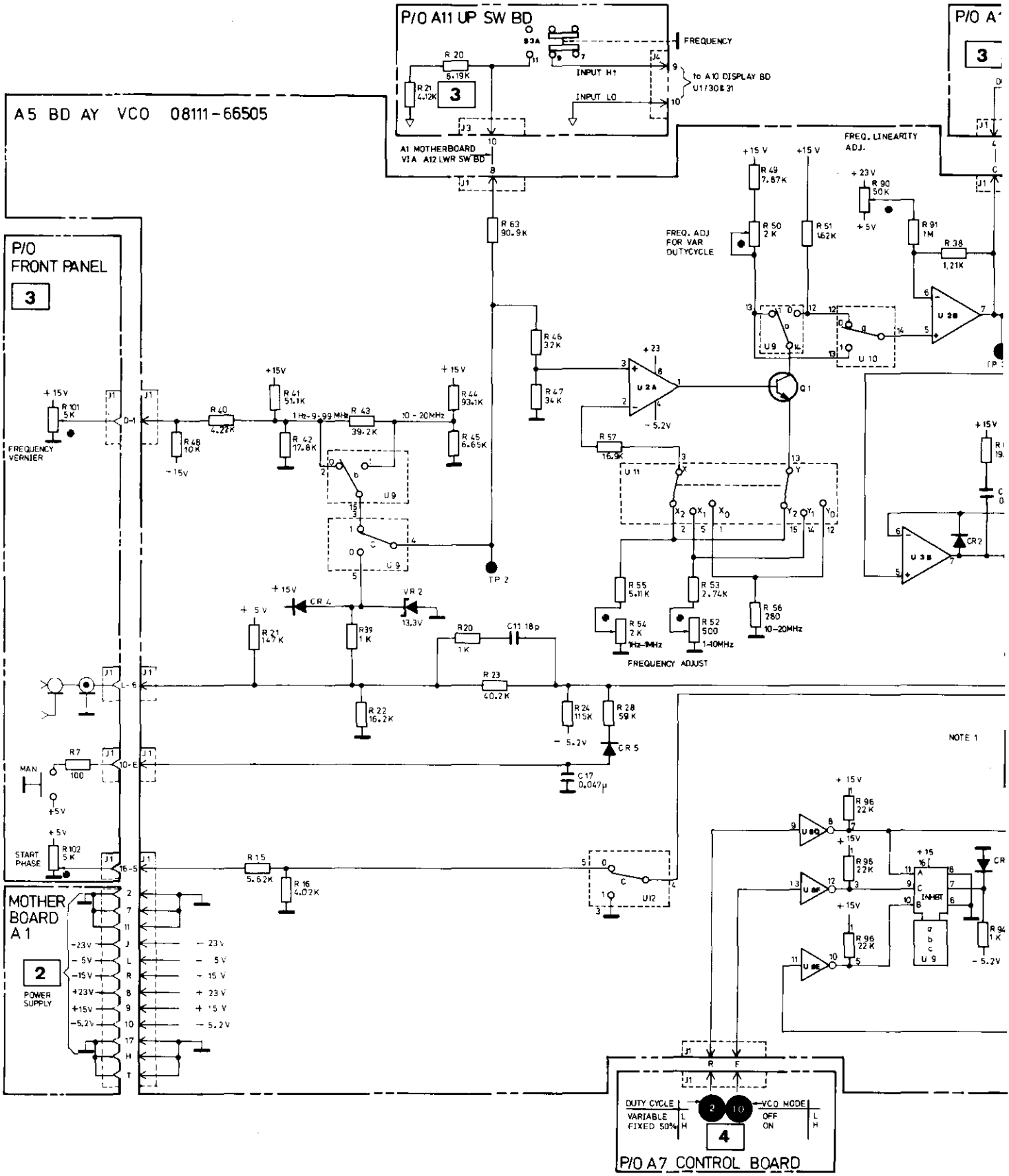
A5 BD AY VCO 08111-66505
P/O A11 UP SW BD
FREQUENCY
INPUT H1
INPUT LO
to A10 DISPLAY BD U1/30 & 31
A1 MOTHERBOARD VIA A12 LWR SW BD
P/O FRONT PANEL
FREQUENCY VERNIER
MAN
START PHASE
MOTHER BOARD A1
POWER SUPPLY
FREQ. LINEARITY ADJ.
FREQ. ADJ FOR VAR DUTYCYCLE
FREQUENCY ADJUST
NOTE 1
DUTY CYCLE
VARIABLE
FIXED 50%
VCO MODE
OFF
ON
P/O A7 CONTROL BOARD

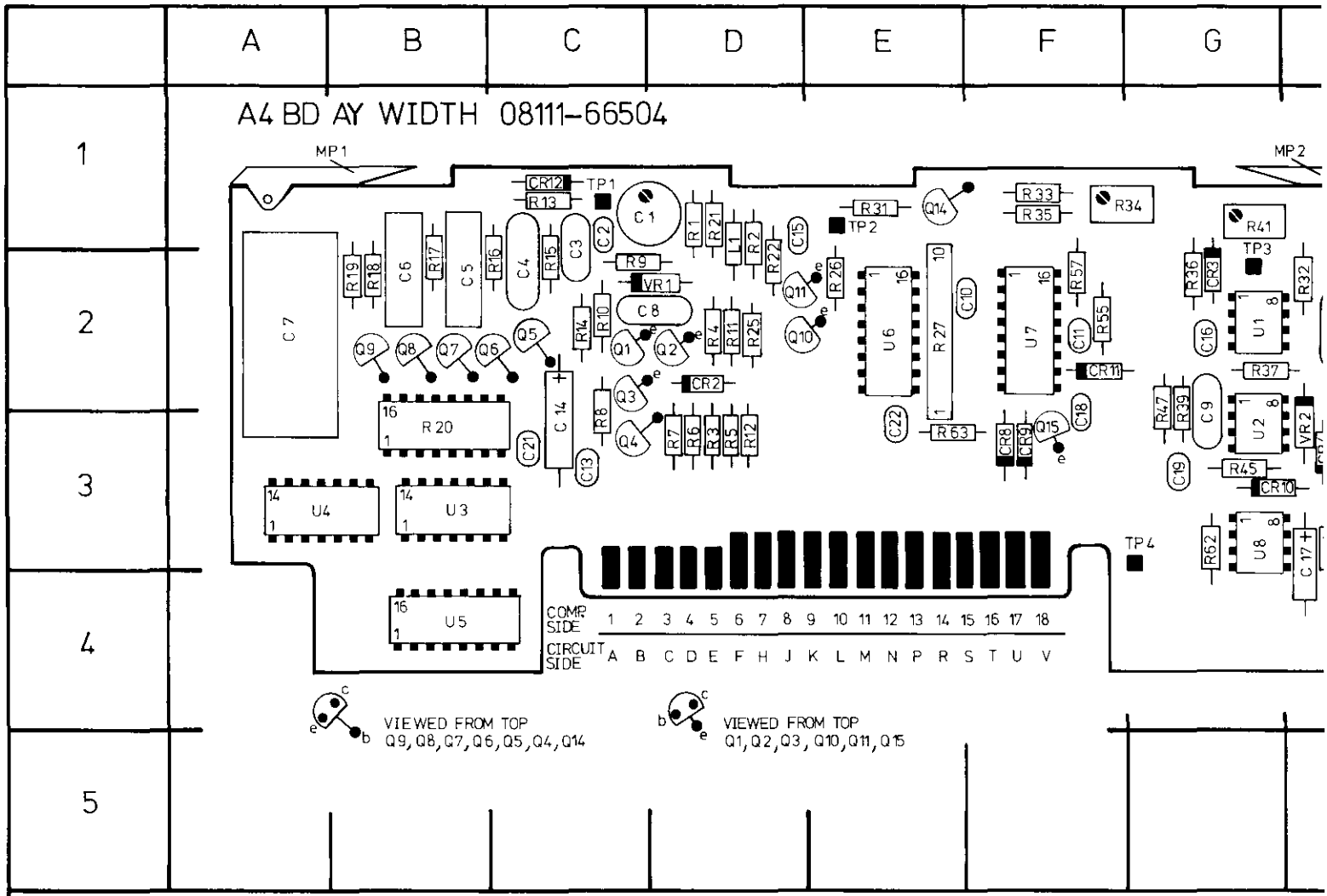

REF DESIG	GRID LOC	REF DESIG	GRID LOC	REF DESIG	GRID LOC	REF DESIG	GRID LOC	REF DESIG	GRID LOC
C1	C1	C16	G2	L1	D2	R2	D1	R18	B2
C2	C1	C17	H4	Q1	C2	R3	D3	R19	B2
C3	C1	C18	F3	Q2	D2	R4	D2	R20	B3
C4	C1	C19	G3	Q3	C2	R5	D3	R21	D1
C5	B2	C21	C3	Q4	C3	R6	D3	R22	D2
C6	B2	C22	E3	Q5	C2	R7	D3	R25	D2
C7	A2	CR2	D2	Q6	B2	R8	C3	R26	E2
C8	C2	CR3	G2	Q7	B2	R9	C2	R27	E2
C9	G2	CR4	H3	Q8	B2	R10	C2	R31	E1
C10	E2	CR5	H3	Q9	B2	R12	D3	R32	H2
C11	F2	CR8	F3	Q10	D2	R13	C1	R33	F1
C12	H2	CR9	H3	Q11	D2	R14	C2	R34	F1
C13	C3	CR10	G3	Q14	E1	R15	C2	R35	F1
C14	C3	CR11	F2	Q15	F3	R16	B2	R36	G2
C15	D1	CR12	C1	R1	D1	R17	B2	R37	G2

9

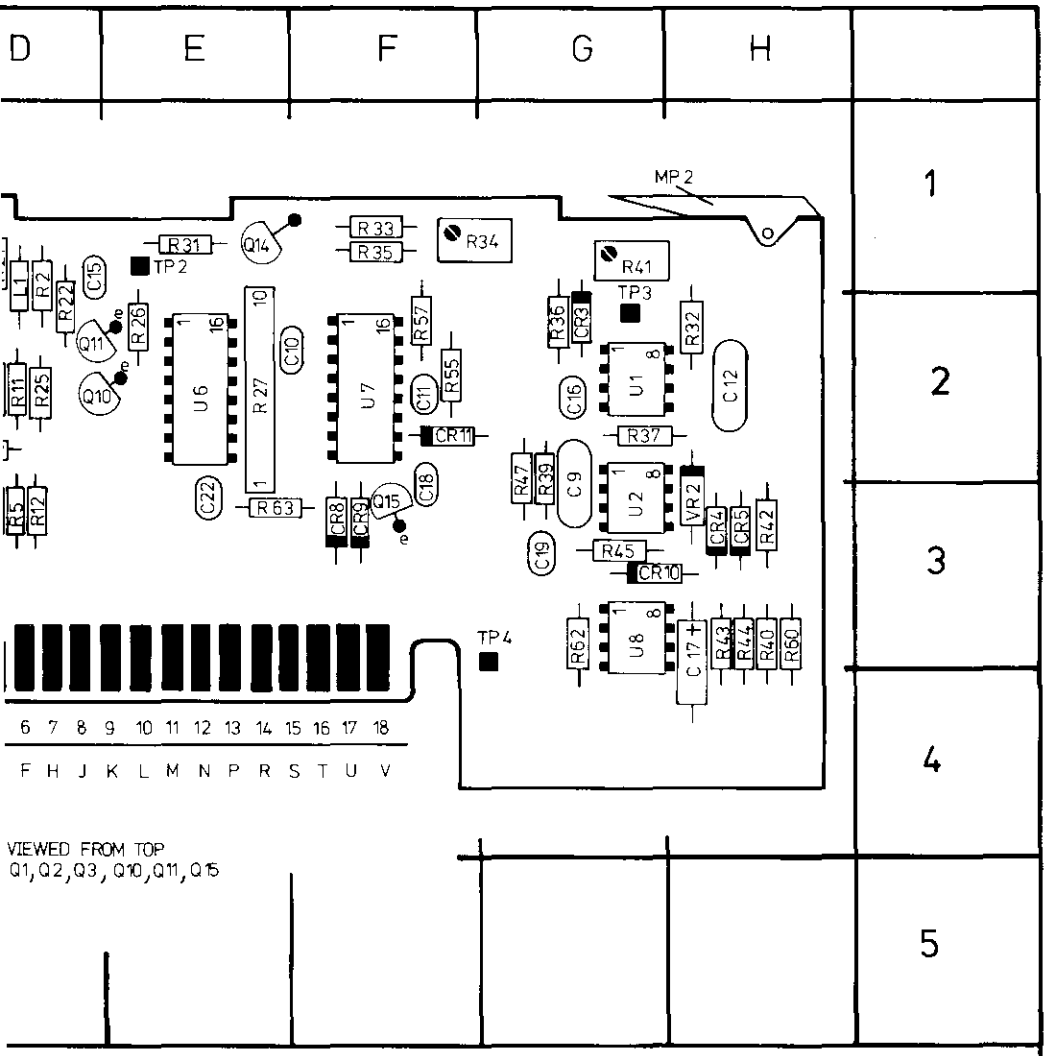

ID C	REF DESIG	GRID LOC	REF DESIG	GRID LOC	REF DESIG	GRID LOC
	R2	D1	R18	B2	R39	G3
	R3	D3	R19	B2	R40	H3
	R4	D2	R20	B3	R41	G1
	R5	D3	R21	D1	R42	H3
	R6	D3	R22	D2	R43	H3
	R7	D3	R25	D2	R44	H3
	R8	C3	R26	E2	R45	G3
	R9	C2	R27	E2	R47	G3
	R10	C2	R31	E1	R55	F2
	R12	D3	R32	H2	R57	F2
	R13	C1	R33	F1	R60	H3
	R14	C2	R34	F1	R62	H3
	R15	C2	R35	F1	R63	E3
	R16	B2	R36	G2		
	R17	B2	R37	G2		

REF DESIG	GRID LOC
U1	G2
U2	G3
U3	B3
U4	A3
U5	B4
U6	E2
U7	F2
U8	G3
VR1	D2
VR2	H3

SERVICE BLOCK 8
WIDTH GENERATOR A4 9

THEORY OF OPERATION

General

The function of the width generator (applicable only in pulse mode) is to provide an output pulse of known, predetermined width in accordance with the 8111A front panel settings.

The Width board (A4) includes the circuitry to do this and also a width error detector/display driver.

The width range, as stated in the Specifications Table, is from 25 ns to 100 ms, this is divided into seven ranges the fastest being 25 ns to 100 ns and then reducing in decade steps from 100–1000 ns to the slowest, 10 ms – 100 ms.

A block diagram of the main sections of the board is shown in Figure 8–8–1, these are: a current source and associated control devices, a set of range capacitors, a range data decoder and associated capacitor selection devices, a Schmitt trigger, a trigger signal converter and and error detector/display driver.

Reference to schematic 9 should be made when reading the following operational description.

OPERATION

The basic operation of the width generator is as follows: A trigger signal (WIDTH TRIGGER) produced either by the VCO or an external source and routed via A6 Shaper, is input to A4.

This sets the Schmitt trigger which then causes the width output signal to go high and enables a constant current to charge up a range capacitor. When the capacitor (or ramp) voltage reaches the Schmitt trigger threshold the width output signal is "reset": – width cycle completed. The capacitor is rapidly discharged and the overall circuit is now ready to receive the next trigger signal from A5.

If, prior to completion of the width cycle the next trigger signal should arrive an error signal will be generated. A more detailed description of the operation of the individual functional "blocks" of the overall circuit will now be given.

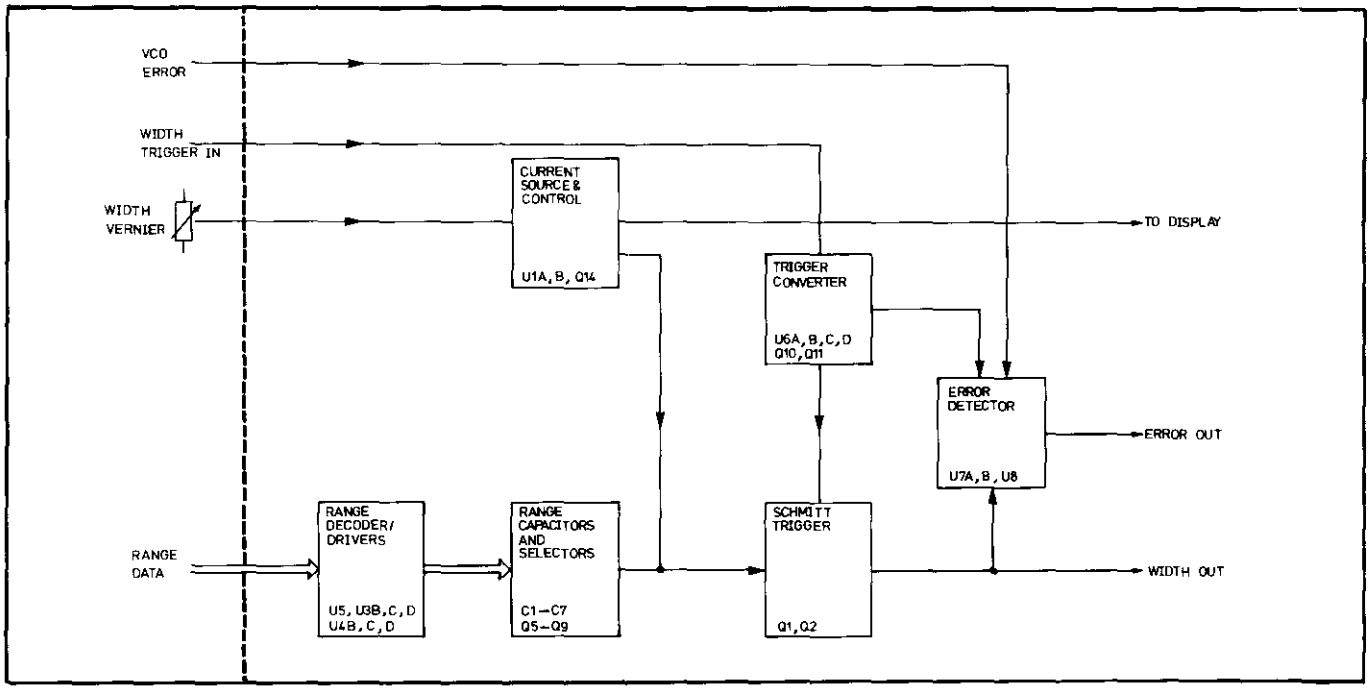

Figure 8–8–1. Simplified Width Board Block Diagram

Current Source

Figure 8–8–2 shows a simplified diagram of the current source.

The front panel mounted width vernier controls the output voltage of U2A, CCW or zero resistance for highest output voltage/fastest value and vice-versa for CW. The adjustable range of output values is dependent on the two reference voltages –5.2 V and –4.16 V. In the fastest width range (25 ns – 100 ns), "switch" S2 is open, so the adjustable range is dependent only on the –5.2 V reference voltage.

The output voltage of U2A together with R41 + R39 controls the current supplied to the range capacitors except when in the fastest range, here S1 is closed to increase the current by a factor of 10 (compared to that required for the other ranges) and therefore achieving faster ramp times. "Switch" functions S1 and S2 as shown in the figure are provided by U1B and U2B together with associated peripheral components. In all ranges except the fastest S2 is closed and S1 open.

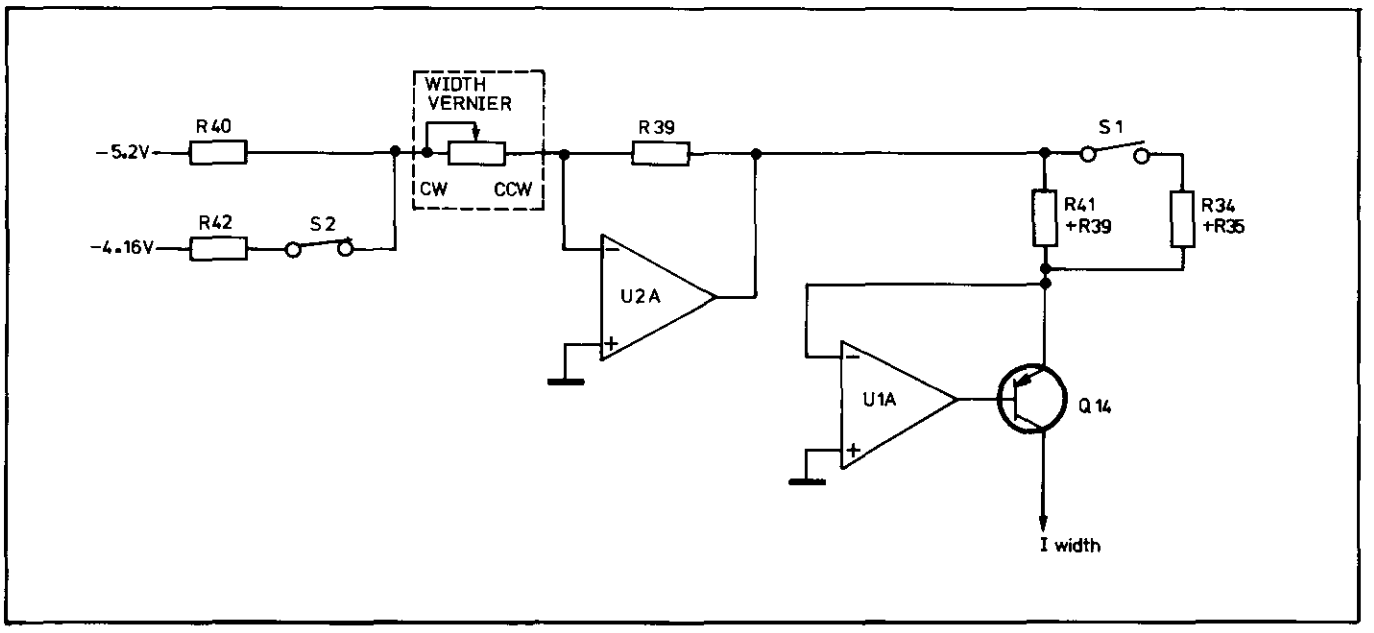

Figure 8–8–2. Simplified Current Source Circuit

Width Range Decoder and Capacitors

Range data, from the front panel switch via board A7, is decoded by the 3–8 decoder U5 (see Figure 8–8–3) to enable either one of the five capacitors C3–C7 plus C1, C2 or only C1, C2. C1, C2 are in fact permanently switched in and are used either as a stand-alone pair for the two fastest width ranges or combined with any of the other five capacitors for all other ranges. The capacitor select/enable transistors Q5–Q9 are operated in both the forward and reverse modes to enable current to flow to charge and also discharge the capacitors.

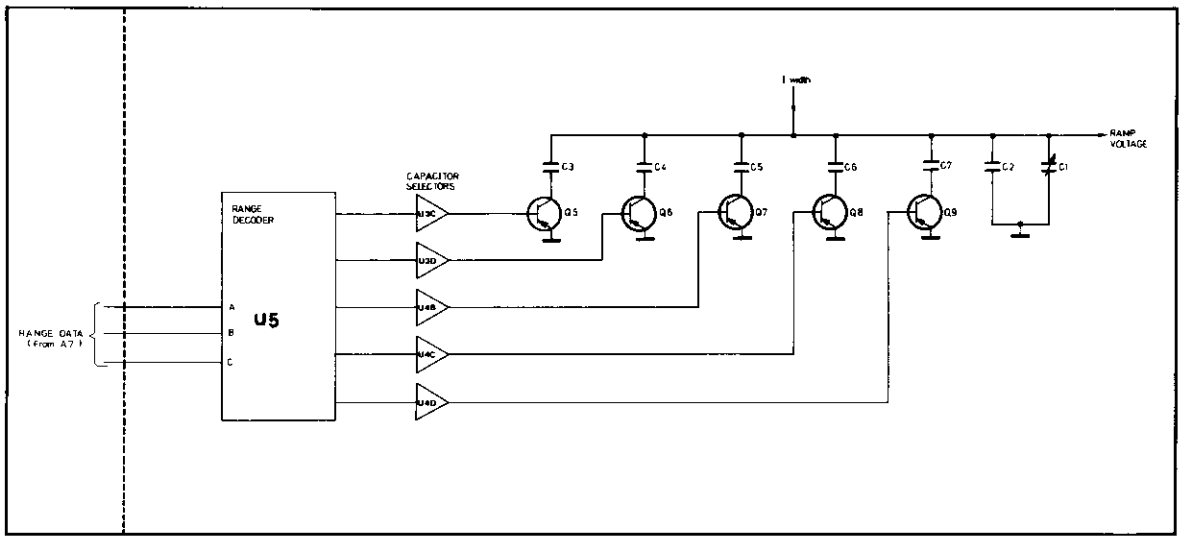

Figure 8–8–3. Simplified Width Range Selector Diagram

Error Detector Circuit

Reference to schematic 9 shows that the width trigger input signal is connected to the clock input of U7A (D type flip-flop) and the width output signal to the D input. A positive going edge at the clock input will cause the data at the D input to be transferred to the Q output, i.e. if D is still high (width signal not completed) when a trigger signal arrives an error signal is produced. A timing diagram to illustrate the error detection process is shown in Figure 8–8–4.

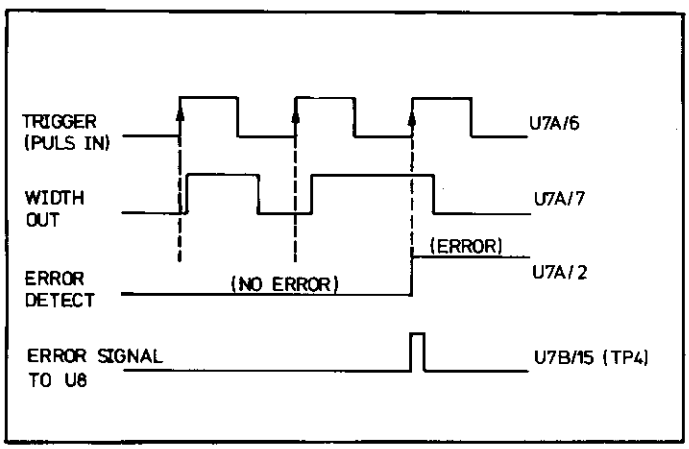

Figure 8–8–4. Error Detection Timing Diagram

Comparator U8 lengthens the output pulse of the monostable U7B and provides a signal suitable for driving the ERROR LED.

Schmitt Trigger

Reference to schematic 9 shows that the Schmitt trigger circuit comprises a differential amplifier with feedback-Q1, Q2 etc. and an emitter follower Q3, Q4.

In the non-active state Q1 conducts and Q2 is turned off. The output voltage of the range capacitors' common connection is clamped at −7.4 V via the emitter follower Q3, Q4. CR2 is biased on and provides base current for Q1 and quiescent current for Q4.

On receipt of a positive trigger pulse, Q2 turns on and switches Q1 off allowing the width output signal to go "high" or active.

The potential at the base of Q4 increases, CR2 is biased off and Q4 is therefore turned off. A charging current is now allowed to flow through the selected range capacitor until the threshold level of the Schmitt trigger is reached. Q1 is then turned on which switches Q2 off and the width output signal goes "low" or off.

The ramp capacitor voltage is discharged to −7.4 V via emitter follower Q4.

Trigger Converter

Refer to schematic 9, the trigger converter generates a 12 ns output pulse (at U6A output) on the positive going edge of the VCO derived input signal. The pulse length is derived from the propagation delay of R27/C10 and the ECL NOR gate U6A. This pulse is then used to set the Schmitt trigger.

TROUBLESHOOTING

When troubleshooting the width board set the 8111A Waveform to Pulse Mode.

Referring to Figure 8–8–5, check the conditions at the following test points, this assists in isolating the fault.

1. The voltage at TP3 is used to control the current source. It should vary by turning the width vernier as follows:

CW		CCW
from 0.7 V	to	9.8 V
or 0.7 V	to	3.9 V in 25 ns–100 ns Range

2. The voltage drop across R31 indicates the current supplied by the current source. Depending on the width vernier position it should vary as follows:

CW		CCW
from 50 mV	to	650 mV
or 0.5 V	to	2.6 V in 25 ns–100 ns Range

3 4 5 and 6 see below :

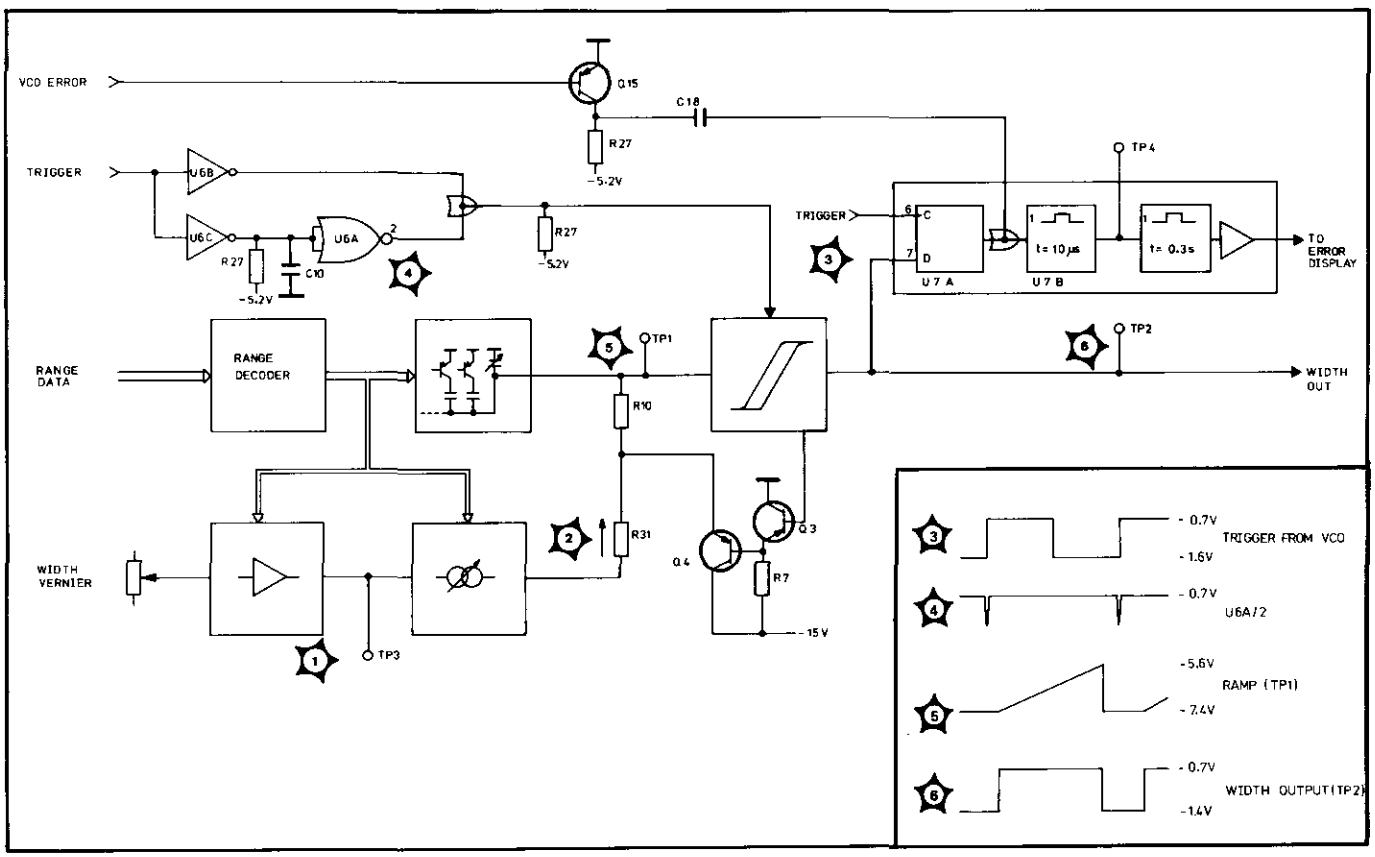

Figure 8–8–5. Width Troubleshooting Diagram

For checking standby conditions of the width board it is recommended that the 8111A be set to a non-pulse waveform. Should the fault appear to be in the WIDTH RANGE SELECTOR section, U5 outputs can be checked against the truth Table 8–8–1.

Table 8–8–1. Range Decoder (U5) Truth Table

Width Range	Range Data (U5 Inputs)			Range Data (U5 Outputs)						Selected Capacitor
	C pin 3	B pin 2	A pin 1	Y_0 pin 15	Y_1 pin 14	Y_2 pin 13	Y_3 pin 12	Y_4 pin 11	Y_6 pin 9	
10 ms – 100 ms	0	0	0	0	1	1	1	1	1	C7
1 ms – 10 ms	0	0	1	1	0	1	1	1	1	C6
100 μs – 1 ms	0	1	0	1	1	0	1	1	1	C5
10 μs – 100 μs	0	1	1	1	1	1	0	1	1	C4
1 μs – 10 μs	1	0	0	1	1	1	1	0	1	C3
100 ns – 1 μs	1	0	1	1	1	1	1	1	1	–
25 ns – 100 ns	1	1	0	1	1	1	1	1	0	–

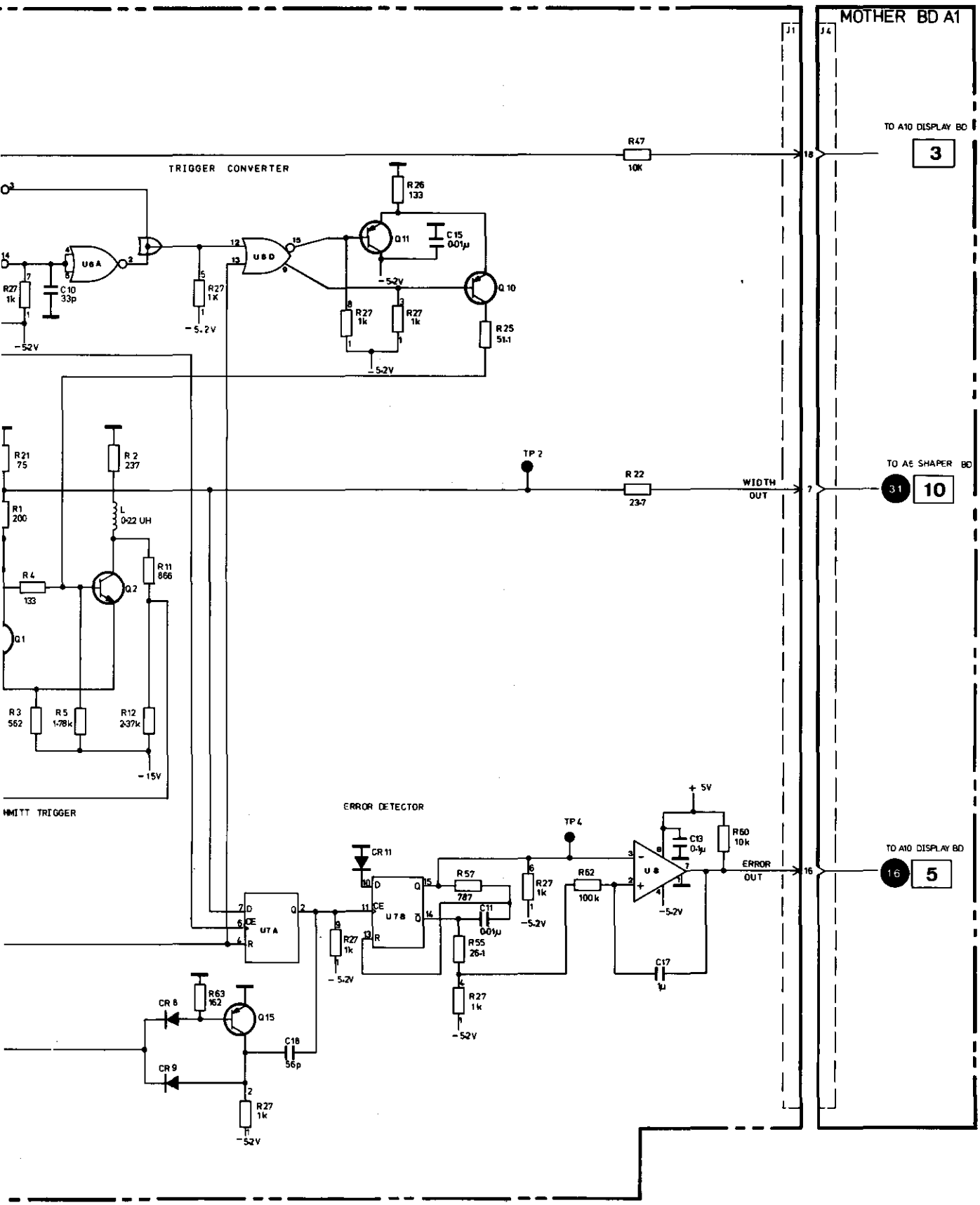

WIDTH GENERATOR A4

9

(08111-66504)

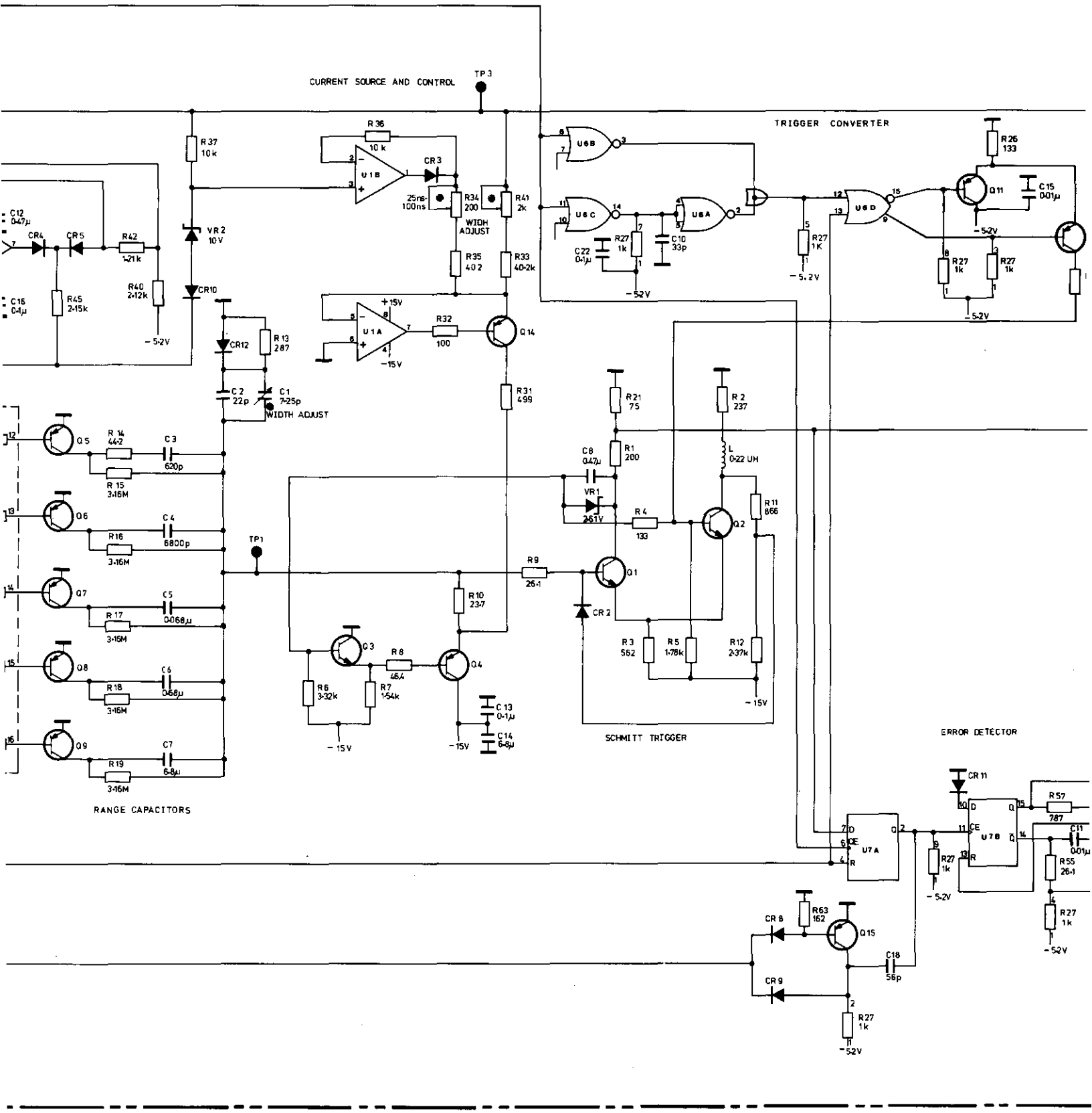

CURRENT SOURCE AND CONTROL
TP3
TRIGGER CONVERTER
R36 10k
U1B
CR3
25ns-100ns
R34 200
WIDH ADJUST
R41 2k
R35 402
R33 40·2k
R37 10k
VR2 10V
CR10
C12 0·47μ
CR4
CR5
R42 1·21k
R40 2·12k
C16 0·1μ
R45 2·15k
-5·2V
U1A
+15V
-15V
R32 100
Q14
CR12
R13 287
C2 22p
C1 7·25p
WIDTH ADJUST
R31 499
U6B
U6C
U6A
U6D
R27 1k
C22 0·1μ
C10 33p
R26 133
Q11
C15 0·01μ
R27 1K
Q5
R14 44·2
C3 620p
R15 3·16M
Q6
C4 6800p
R16 3·16M
Q7
C5 0·068μ
R17 3·16M
Q8
C6 0·68μ
R18 3·16M
Q9
C7 6·8μ
R19 3·16M
RANGE CAPACITORS
TP1
R21 75
R2 237
C8 0·47μ
R1 200
L 0·22 UH
VR1 2·61V
R4 133
Q2
R11 866
R9 26·1
Q1
CR2
R10 23·7
Q3
R8 46·4
Q4
R6 3·32k
R7 1·54k
C13 0·1μ
C14 6·8μ
R3 562
R5 1·78k
R12 2·37k
SCHMITT TRIGGER
ERROR DETECTOR
CR11
U7A
U7B
R57 787
C11 0·01μ
R55 26·1
R63 162
CR8
Q15
CR9
C18 56p

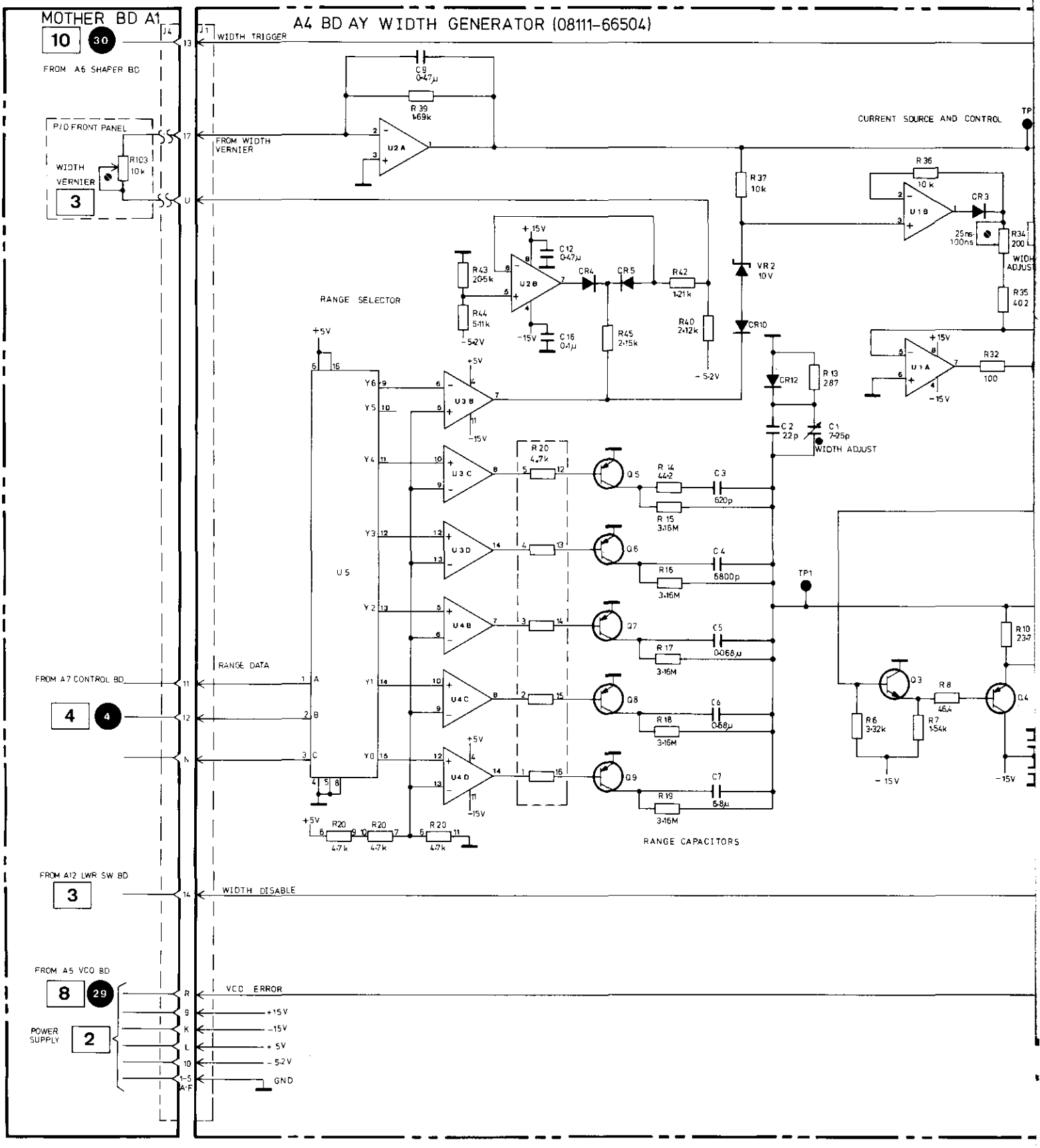
MOTHER BD A1
A4 BD AY WIDTH GENERATOR (08111-66504)
WIDTH TRIGGER
FROM A6 SHAPER BD
P/O FRONT PANEL
WIDTH VERNIER
FROM WIDTH VERNIER
CURRENT SOURCE AND CONTROL
RANGE SELECTOR
RANGE DATA
FROM A7 CONTROL BD
RANGE CAPACITORS
WIDTH ADJUST
FROM A12 LWR SW BD
WIDTH DISABLE
FROM A5 VCO BD
VCO ERROR
POWER SUPPLY
GND

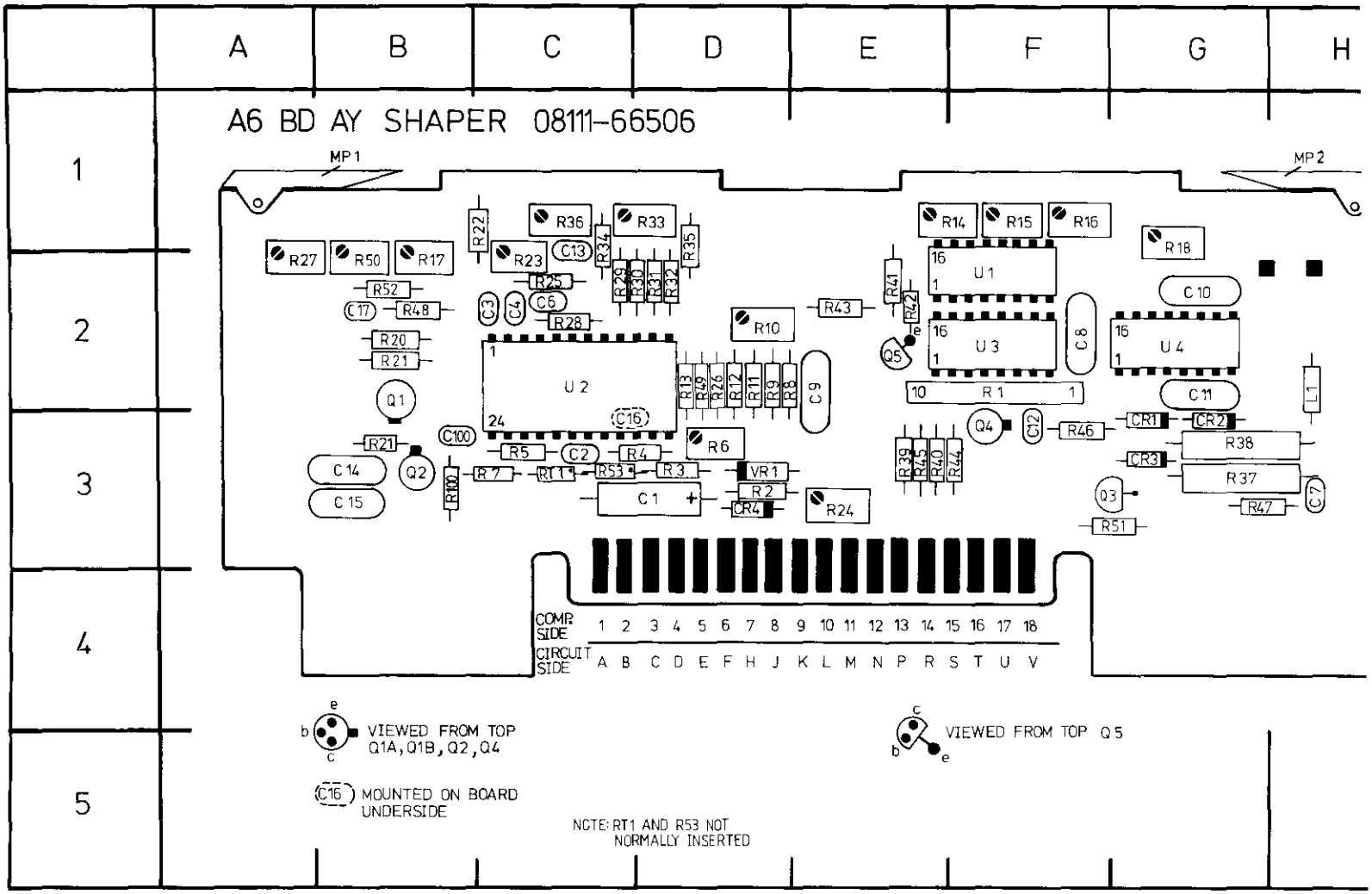

REF DESIG	GRID LOC	REF DESIG	GRID LOC	REF DESIG	GRID LOC	REF DESIG	GRID LOC	REF DESIG	GRID LOC	REF DES
C1	D3	C16	C3	R3	D3	R18	G1/2	R33	D1	R48
C2	C3	C17	B2	R4	C3	R19	B2	R34	C1	R49
C3	C2	CR1	G3	R5	C3	R20	B2	R35	D1	R50
C4	C2	CR2	G3	R6	D3	R21	B2	R36	C1	R51
C5	B2	CR3	G3	R7	C3	R22	B1	R37	G3	R52
C6	C2	CR4	D3	R8	D2	R23	C2	R38	G3	R53
C7	H3	L1	H2	R9	D2	R24	E3	R39	E3	RT1
C8	F2	Q1	B2	R10	D2	R25	C2	R40	E3	U1
C9	E2	Q2	B3	R11	D2	R26	D2	R41	E2	U3
C10	G2	Q3	F3	R12	D2	R27	A2	R42	E2	U4
C11	G2	Q4	F3	R13	D2	R28	C2	R43	E2	VR1
C12	F3	Q5	E2	R14	E1	R29	C2	R44	F3	
C13	C1	R1	F3	R15	F1	R30	C2	R45	E3	
C14	B3	R2	D3	R16	F1	R31	D2	R46	F3	
C15	B3	R3	D3	R17	B2	R32	D2	R47	G3	

10

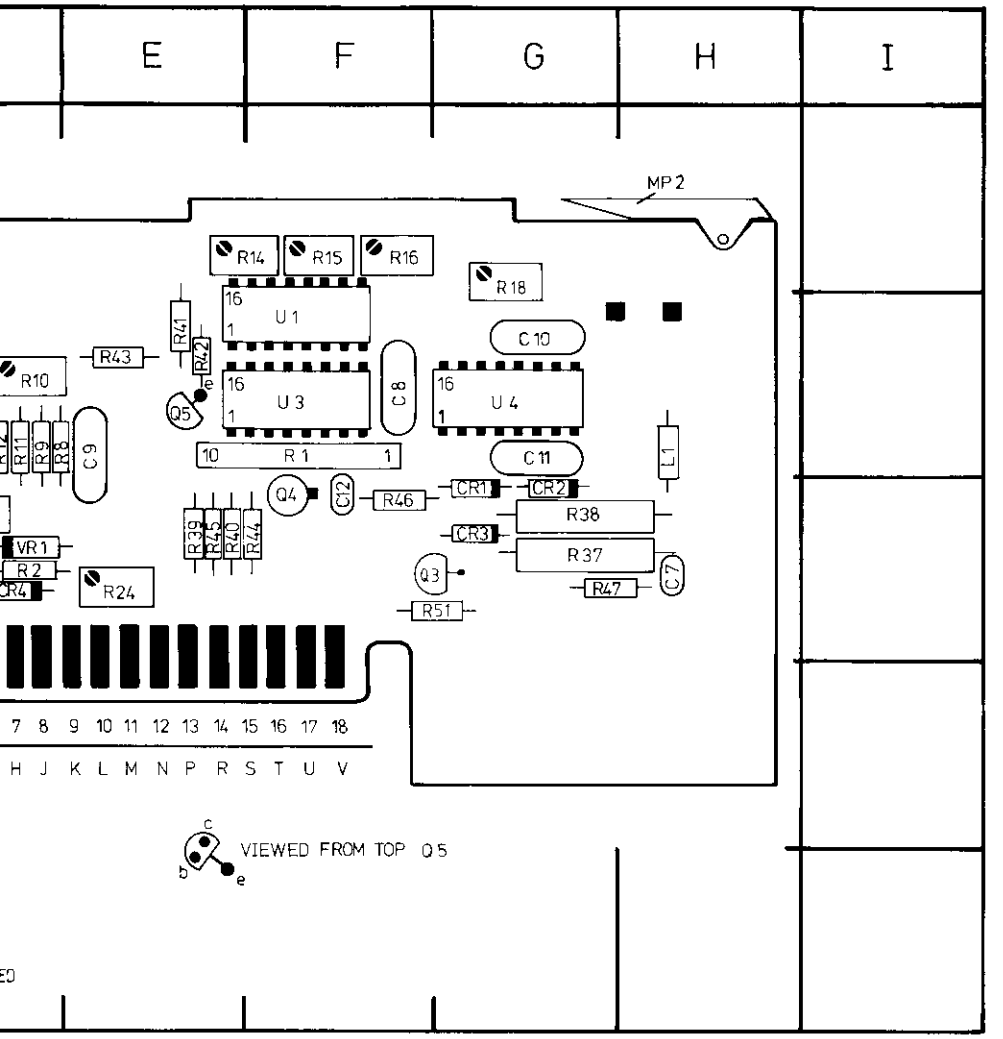

REF DESIG	GRID LOC	REF DESIG	GRID LOC	REF DESIG	GRID LOC
R18	G1/2	R33	D1	R48	B2
R19	B2	R34	C1	R49	D2
R20	B2	R35	D1	R50	B1/2
R21	B2	R36	C1	R51	G3
R22	B1	R37	G3	R52	B2
R23	C2	R38	G3	R53*	C3
R24	E3	R39	E3	RT1*	C3
R25	C2	R40	E3	U1	F2
R26	D2	R41	E2	U3	F2
R27	A2	R42	E2	U4	G2
R28	C2	R43	E2	VR1	D3
R29	C2	R44	F3		
R30	C2	R45	E3		
R31	D2	R46	F3		
R32	D2	R47	G3		

SERVICE BLOCK 9
SHAPER BOARD A6 10

THEORY OF OPERATION

General

The function of the Shaper board is to process the input signal delivered by either the VCO (A5) if in function mode or Width board (A4) if in pulse mode. Its main operational features include triangle to sinewave conversion and a pulse transition time speed up circuit. This is operative for both pulse and square waveforms.

Additional features of the Shaper are a 1:10 attenuation stage for all output signals controlled by a simple external reference voltage (potentiometer), a level shifter enabling positive and negative offset output signals and a normal/complement switching facility.

The OUTPUT signal from A6 is fed to the Output board (A8) and the TRIGGER OUTPUT goes directly to the front panel connector.

OPERATION

The most significant part of the board is the IC-U2 which performs the signal shaping and conversion functions. A simplified diagram of the board is shown in Figure 8–9–1 and this clearly illustrates the significance of U2. The various IC capabilities are enabled by control inputs, these include the two mode select pins which enable either linear preamplifier mode (for triangular waveforms), triangle to sine conversion of fast pulse. This last mode requires the application of an EECL (Emitter Emitter Coupled Logic) level input signal whereas the "triangle and sine" modes require the application of normal and complement triangular waveforms. Additional control inputs enable NORM/COMPLEMENT control (Pin 15) and POS/SYMMETRICAL/NEG (pins 10 and 11) biasing.

Apart from U1 and its input, biasing and adjustment components, the two remaining significant circuit elements comprising the board are the input stage for square or pulse operation – U3, Q4, Q5, etc. – and the output or "current mirror" stage.

Square/Pulse Input Stage

Either the TRIGGER IN or the WIDTH IN signal is selected, selection depends on U1B and U3B (WIDTH DISABLE) pin 11 status. Q4 converts the incoming trigger signal to an ECL level and Q5 changes this to the special EECL levels (–0.6 V for "low" and 0 V for "high"). The TRIGGER OUTPUT signal is derived from Q4 emitter, and converted from ECL to TTL by A6 U4.

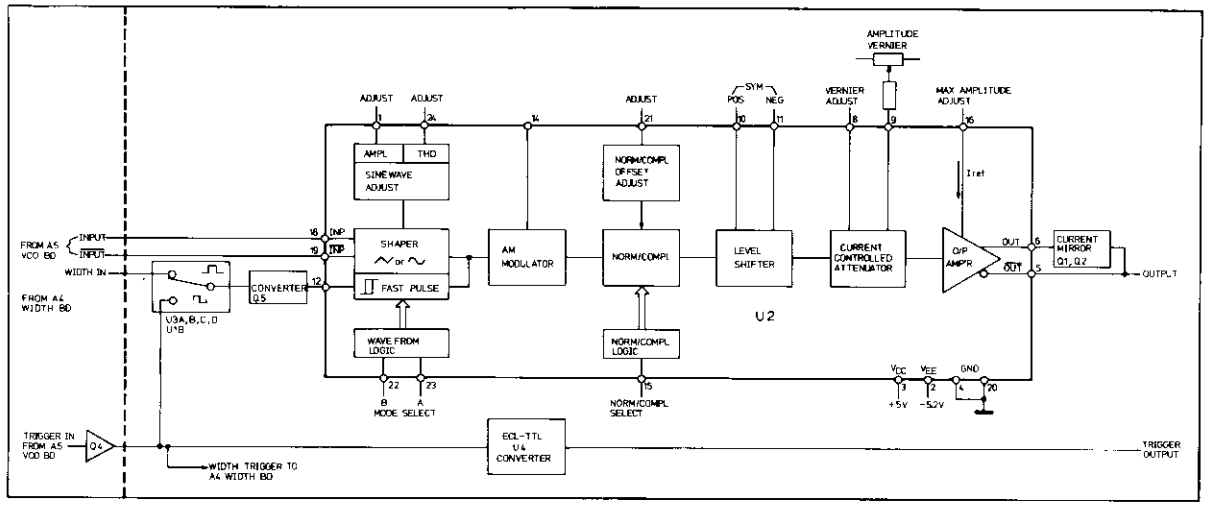

Figure 8–9–1. Simplified Shaper Board Block Diagram

Output Stage (Current Mirror) or)

The output waveforms from U2 comprise differential current stages, by summing these with a "current mirror", undesirable offset effects are reduced to zero and a doubling of the available output signal amplitude is achieved. The operating principle is shown in Figure 8–9–2, the Current mirror performs a current inversion (without this the summing would result in a zero output) and in effect produces an output current which is a true "reflection" of its input current provided that Q1A and Q1B are a matched pair.

By summing the differential output currents, the quiescent currents I_q and their effect is eliminated.

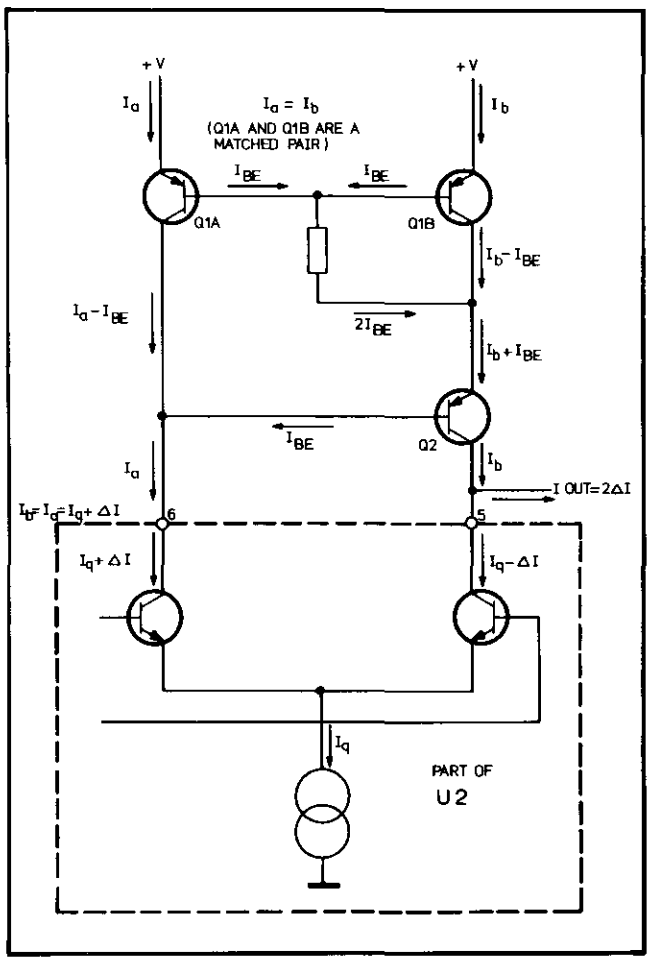

Figure 8–9–2. Current Mirror Operating Principle

TROUBLESHOOTING

General

As a first step confirm that the problem is in fact at the Shaper board by ensuring that the required input signals as shown in Figure 8–9–3 are present.

Once these conditions are confirmed check that the appropriate adjustment potentiometer is not open or short circuited since this type of fault can cause a failure condition which appears to come from U2.

If maximum signal amplitude is not obtainable check that the voltage across VR1 is at least +5.12 V. The output amplitude level from A6 for all waveforms should be approximately 500 mV_{pp} when the front panel AMPLITUDE vernier is fully CW.

Current Mirror

To confirm correct operation check that the signal levels at Q1A and A1B emitters are the same (the transistors are a matched pair).

Signal Output in Pulse or Square Waveform

If a fault is seen only when in pulse or squarewave then check that the logic conditions of gates U3A, B, C and D is in accordance with Table 8–9–1. These levels are ECL and can be checked with an ECL probe.

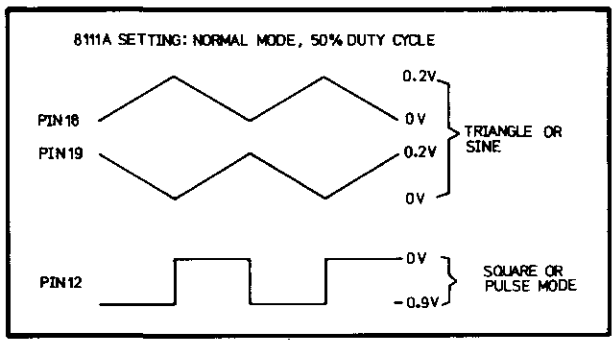

Figure 8–9–3. Input Signals

Waveform and Output Mode Selection

The various control signal logic levels input to IC U2 can be checked against Tables 8–9–2 and 8–9–3. The logic levels in the tables are all TTL.

Table 8–9–1. Waveform and Output Mode Selection

8111A Setting	U3/5 R11	U3/14	U3/6	U1B/4 → 3
⌃ ∿	H	L	H	non conducting
⊓	H	L	L	conducting
⎍	L	H	H	conducting

Table 8–9–2.

8111A	U2/23	U2/22
⌃	L	L
∿	L	H
⊓ ⎍	H	H

Table 8–9–3.

8111A Setting	U2/15
NORMAL, POS or SYM	L
NORMAL, NEG	H
COMPL, NEG	L
COMPL, POS or SYM	H

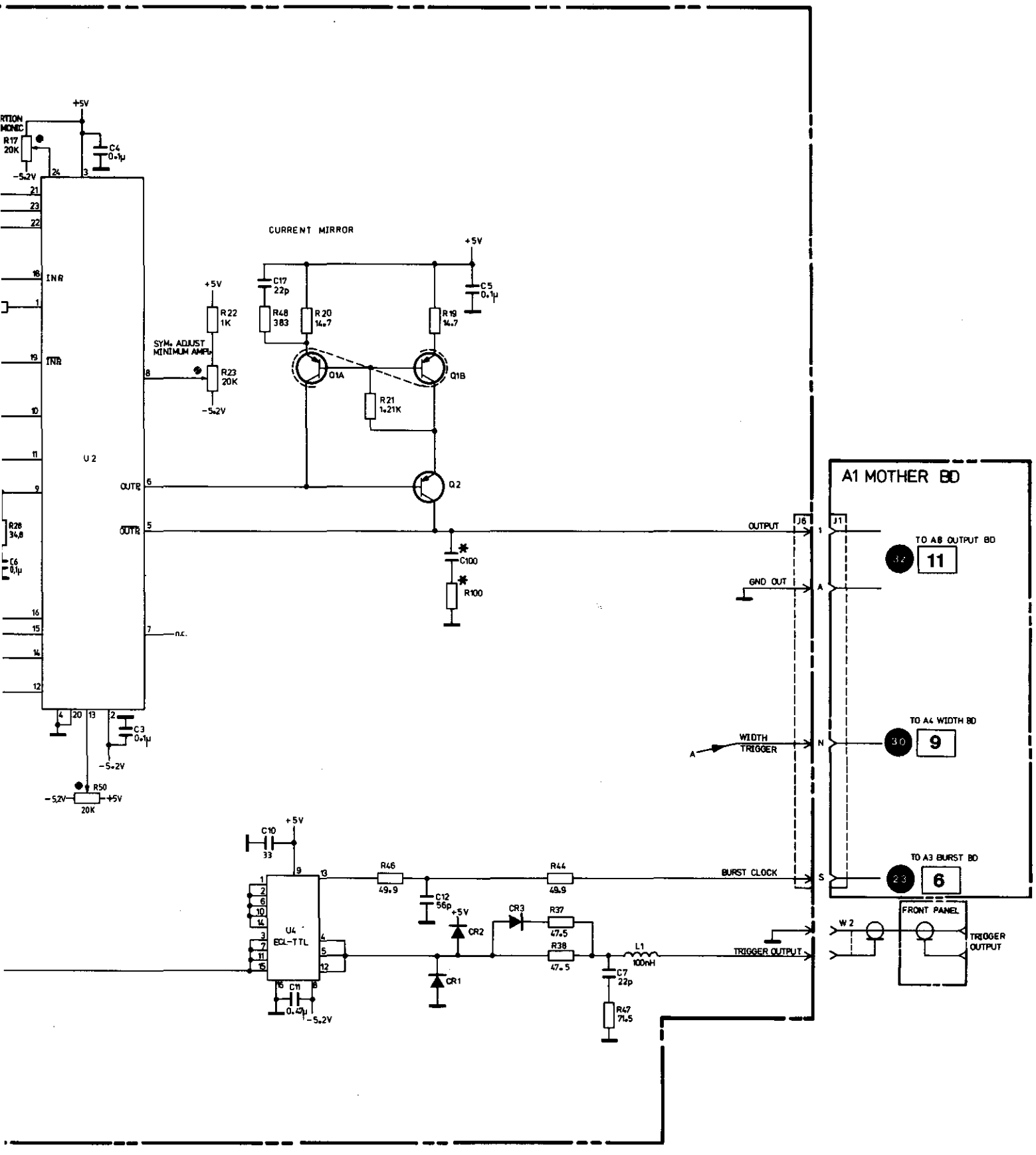

SHAPER BOARD A6 **10**

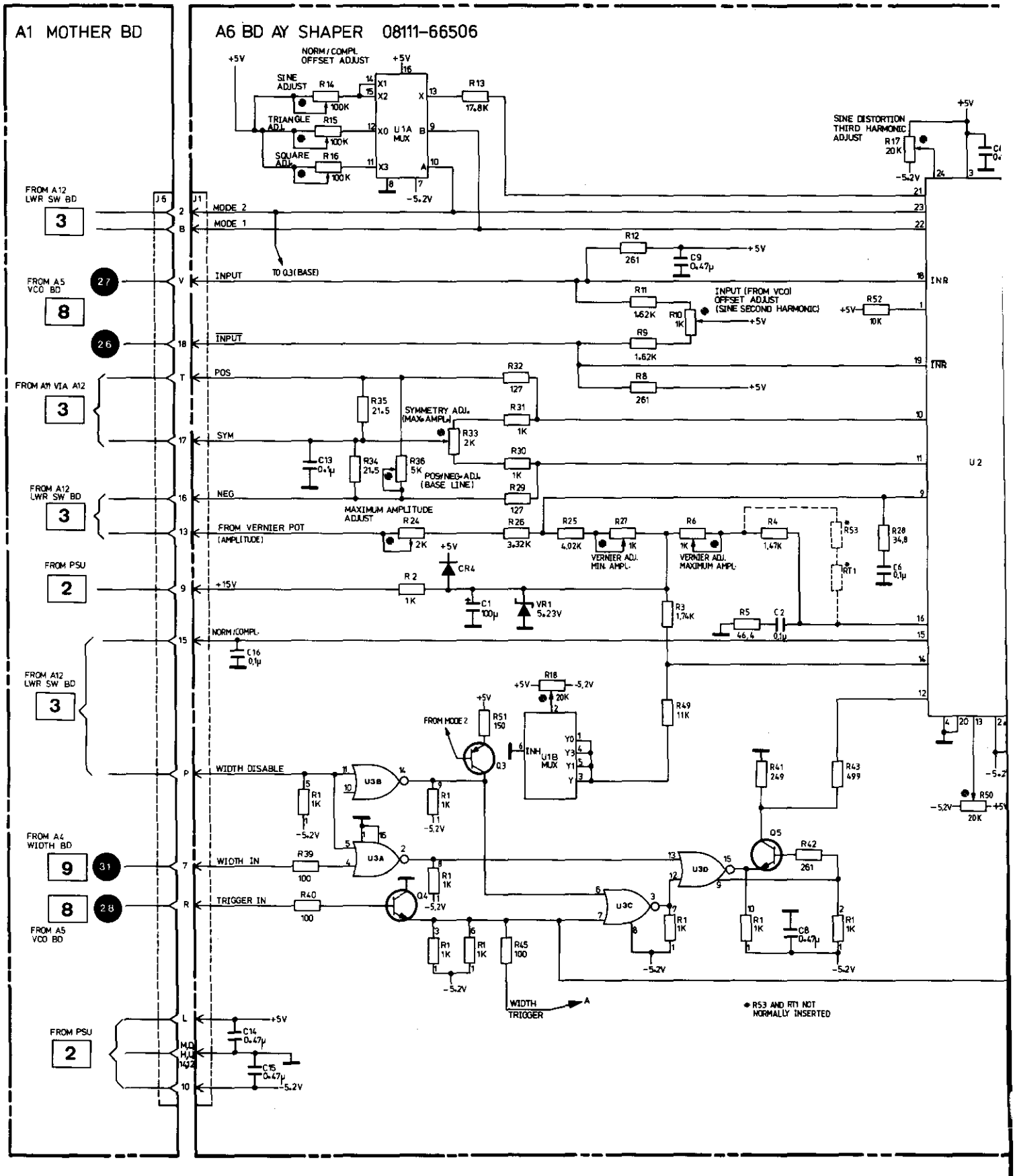
A1 MOTHER BD
A6 BD AY SHAPER 08111-66506
NORM/COMPL OFFSET ADJUST
SINE ADJUST
TRIANGLE ADJ.
SQUARE ADJ.
U1A MUX
SINE DISTORTION THIRD HARMONIC ADJUST
FROM A12 LWR SW BD
FROM A5 VCO BD
FROM A11 VIA A12
FROM PSU
FROM A4 WIDTH BD
MODE 2
MODE 1
INPUT
TO Q3 (BASE)
INPUT (FROM VCO) OFFSET ADJUST (SINE SECOND HARMONIC)
POS
SYM
NEG
SYMMETRY ADJ. (MAX. AMPL.)
POS/NEG-ADJ. (BASE LINE)
MAXIMUM AMPLITUDE ADJUST
FROM VERNIER POT (AMPLITUDE)
VERNIER ADJ. MIN. AMPL.
VERNIER ADJ. MAXIMUM AMPL.
+15V
NORM/COMPL.
WIDTH DISABLE
WIDTH IN
TRIGGER IN
FROM MODE 2
WIDTH TRIGGER
* R53 AND RT1 NOT NORMALLY INSERTED

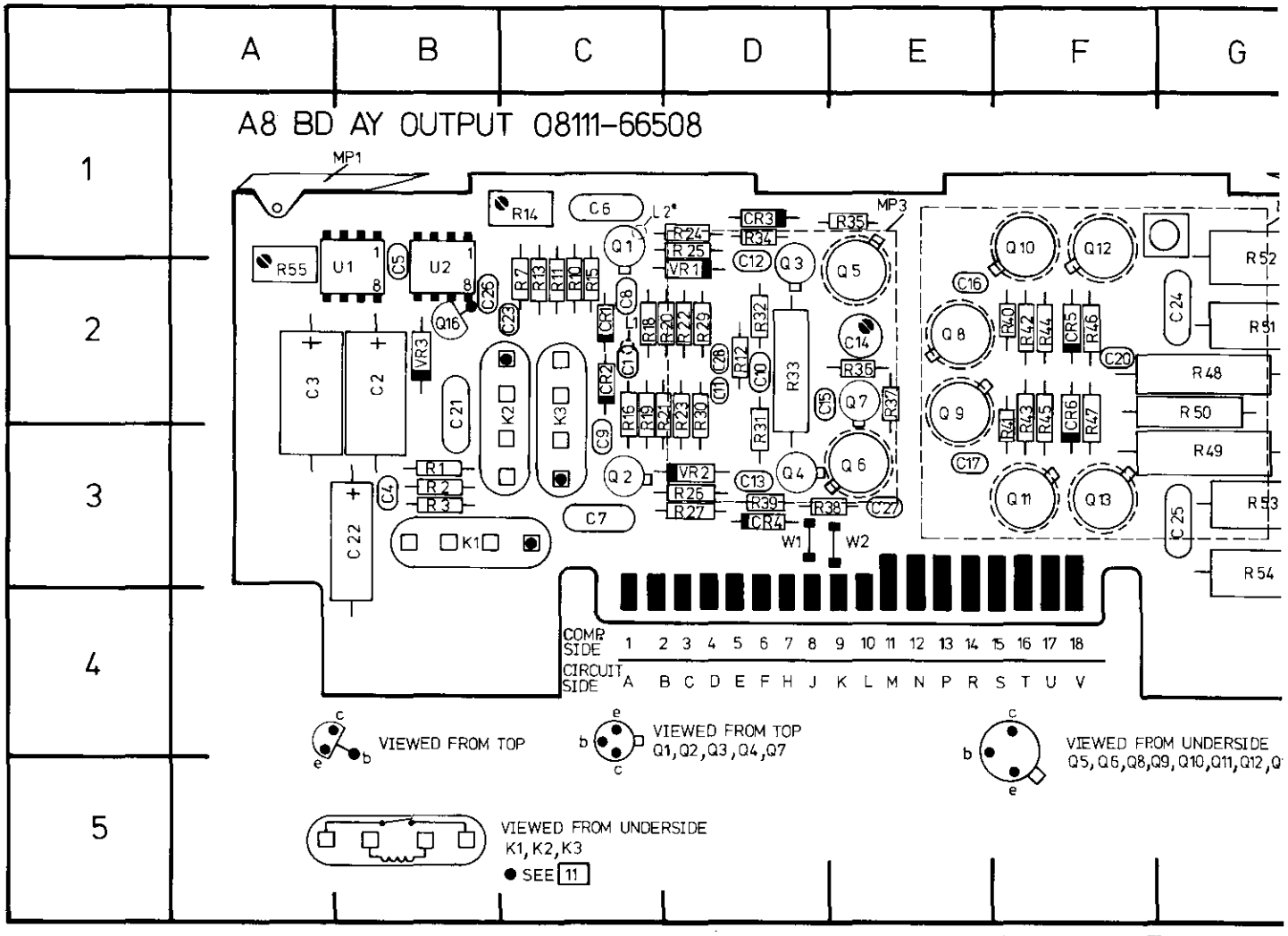

REF DESIG	GRID LOC	REF DESIG	GRID LOC	REF DESIG	GRID LOC	REF DESIG	GRID LOC	REF DESIG
C1	C2	C16	E2	CR3	D1	Q8	E2	R14
C2	B2	C17	E3	CR4	D3	Q9	E2	R15
C3	A2	C18	H2	CR5	F2	Q10	F1	R16
C4	B3	C19	H3	CR6	F2	Q11	F3	R18
C5	B2	C20	F2	K1	B3	Q12	F1	R19
C6	C1	C21	B2	K2	B2	Q13	F3	R20
C7	C3	C22	B3	K3	C2	Q16	B2	R21
C8	C2	C23	C2	L1	C2	R1	B3	R22
C9	C3	C24	G2	Q1	C1	R2	B3	R23
C10	D2	C25	G3	Q2	C3	R3	B3	R24
C11	D2	C26	B2	Q3	D2	R7	C2	R25
C12	D1	C27	E3	Q4	D4	R10	C2	R26
C13	D3	C28	D2	Q5	E2	R11	C2	R27
C14	E2	CR1	C2	Q6	E3	R12	D2	R29
C15	D2	CR2	C2	Q7	E2	R13	C2	R30

11

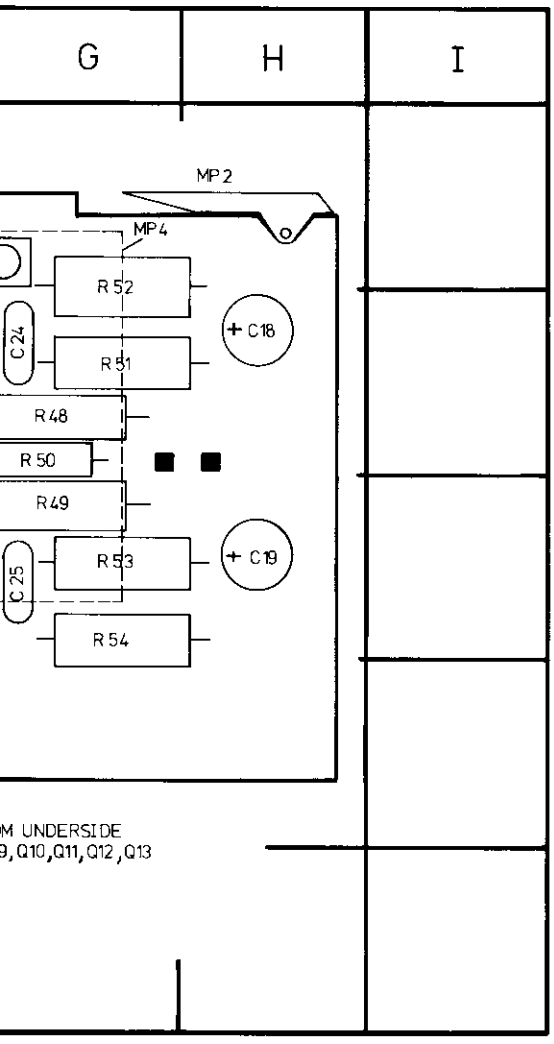

REF DESIG	GRID LOC	REF DESIG	GRID LOC
R14	C1	R31	D3
R15	C2	R32	D2
R16	C2	R33	D2
R18	C2	R34	D1
R19	C2	R35	E1
R20	C2	R36	E2
R21	C2	R37	E3
R22	D2	R38	D3
R23	D2	R39	D3
R24	D1	R40	F2
R25	D1	R41	F3
R26	D3	R42	F2
R27	D3	R43	F2
R29	D2	R44	F2
R30	D2	R45	F2

REF DESIG	GRID LOC
R46	F2
R47	F2
R48	G2
R49	G3
R50	G2
R51	G2
R52	G2
R53	G3
R54	G4
R55	A2
U1	B2
U2	B2
VR1	D2
VR2	D3
VR3	B2
W1	D3
W2	E3

SERVICE BLOCK 10
OUTPUT BOARD A8 11

THEORY OF OPERATION

General

The main functions of the Output board are to amplify the signal derived from the Shaper (A6) and add (or subtract) the required offset voltage as set by the front panel vernier. In addition, 20 dB of attenuation can be applied to the signal (if – 20 dB pushbutton pressed) by a passive attenuator. The output signal from A8 is fed to the Upper Switch board (A11) where it is either further attenuated (40 dB) or output directly to the front panel socket.

The main feature of board A8 is the actual output amplifier, this is in principle an inverting operational amplifier and is shown in simplified form in Figure 8–10–1. The voltage gain, as can be seen in the figure, is determined by Rin and Rfb, Av = Rfb/Rin. The main amplifier (or HF AMP) has offset voltages and currents which have to be compensated for. This is achieved by U1 and U2. U1 compares the voltage at the inverting input of HF AMP with ground and maintains it at zero difference by supplying a current through Rc and therefore ensuring a "virtual ground". U2 detects any undesired offset voltage at HF AMP output via the feedback network RinxV/RfbxV and compensates it via the non-inverting input.

The offset Input (derived via the offset vernier and fixed 20 dB attenuator as required) is added to the HF AMP output via R offs and U2 etc.

As can be seen from Figure 8–10–2, the HF Amplifier can be considered as three stages – Input, Voltage Gain and Output. The operation of these will now be described:

Input Stage

The input signal (I/P–) is amplified by Q1, Q2 (common base amplifiers), CR1 and CR2 provide the required bias voltages. The offset signal (I/P+) is applied between CR1 and CR2, which ensures a constant reference point. The output signals, produced across R24, R27, are applied to the bases of Q3 and Q4.

Voltage Gain Stage

Transistors Q3, Q4 (operating as emitter follower) drive Q5 and Q6 respectively to provide the actual voltage amplification.

Output Stage

The emitter followers Q10, Q12 and Q11, Q13 decouple the low output impedance of R out from the voltage gain stage.

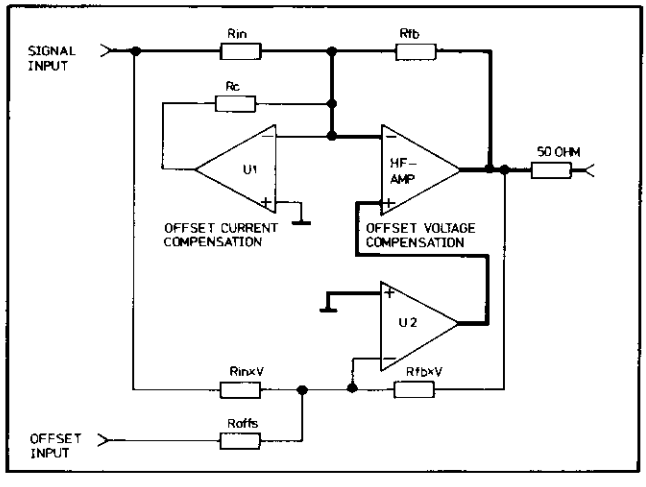

Figure 8–10–1. Simplified Output Amplifier

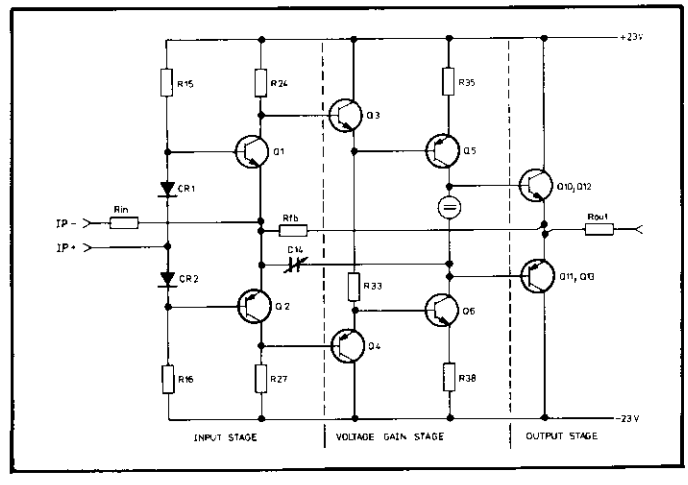

Figure 8–10–2. HF Amplifier Simplified Diagram

TROUBLESHOOTING

CAUTION

Do not operate without heat sinks on board A8. If replacement of one of the transistors Q5–Q13 is necessary, first remove all heat sink securing screws, then plate or bracket and finally, if necessary, the transistor adaptors. Do not attempt to remove a complete heat-sink assembly i.e. plate and transistor adaptors together since damage to transistors will be likely.

The troubleshooting information is given in two sections, first for the HF AMP and then the Offset Control.

HF Amplifier

The following hints will help to isolate a fault in the 8111A output amplifier.

The voltages, shown on Service sheet 11 in blue, should be measured by a DVM with the low terminal connected to ground.
The following test conditions are required:

A6 Shaper board disconnected from connector
20 dB AMPL-ATTENUATOR pushbutton pressed
Offset Vernier set to 0 V

If the voltage between CR1 and CR2 (2) is fully neagtive (approx. –15 V) check Q2, Q4 and Q6. If it is fully positive (approx. +15 V) check Q1, Q3 and Q5. If Q10/Q11 or Q12/Q13 fail (emitter/collector short circuit) the 8111A regulated power supply rails will switch off. If it is necessary to replace any of the output stage transistors Q8–Q13, check that CR5 and CR6 are not defective.

Distorted Leading and Trailing Edges

If the output from A8 in pulse or square wave has distorted leading or trailing edges, and the input signal from A6 is undistorted, then make the following test:

Set the 8111A to high output amplitude (16 V, Symmetrical)

If the leading edge is distorted, check Q3 and Q5.

If the trailing edge is distorted, check Q4 and Q6.

Offset Control

The offset of the 8111A output signal depends on the current through R7.

1 The offset control voltage at the offset input of A8 varies: from –0.9 V for + 8 V offset at the 8111A output to +0.9 V for –8 V offset at the 8111A output.

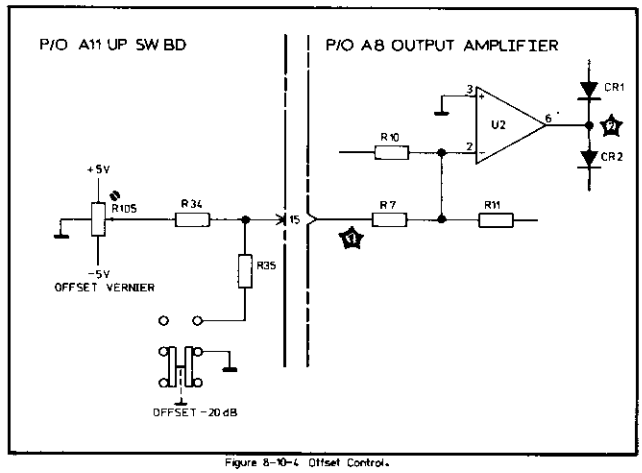

Figure 8–10–4. Offset Control.

Figure 8–10–3. Offset Control

2 Due to high internal gain of the HF-AMP, the voltage at its non-inverting input varies by only approximately 4 mV about 0 V over the whole offset range. If the voltage is at either the maximum positive or negative rail value (± 15 V) then, either U2 or the HF amplifier is defective.

An offset error or failure can also be caused by a fault at U1.

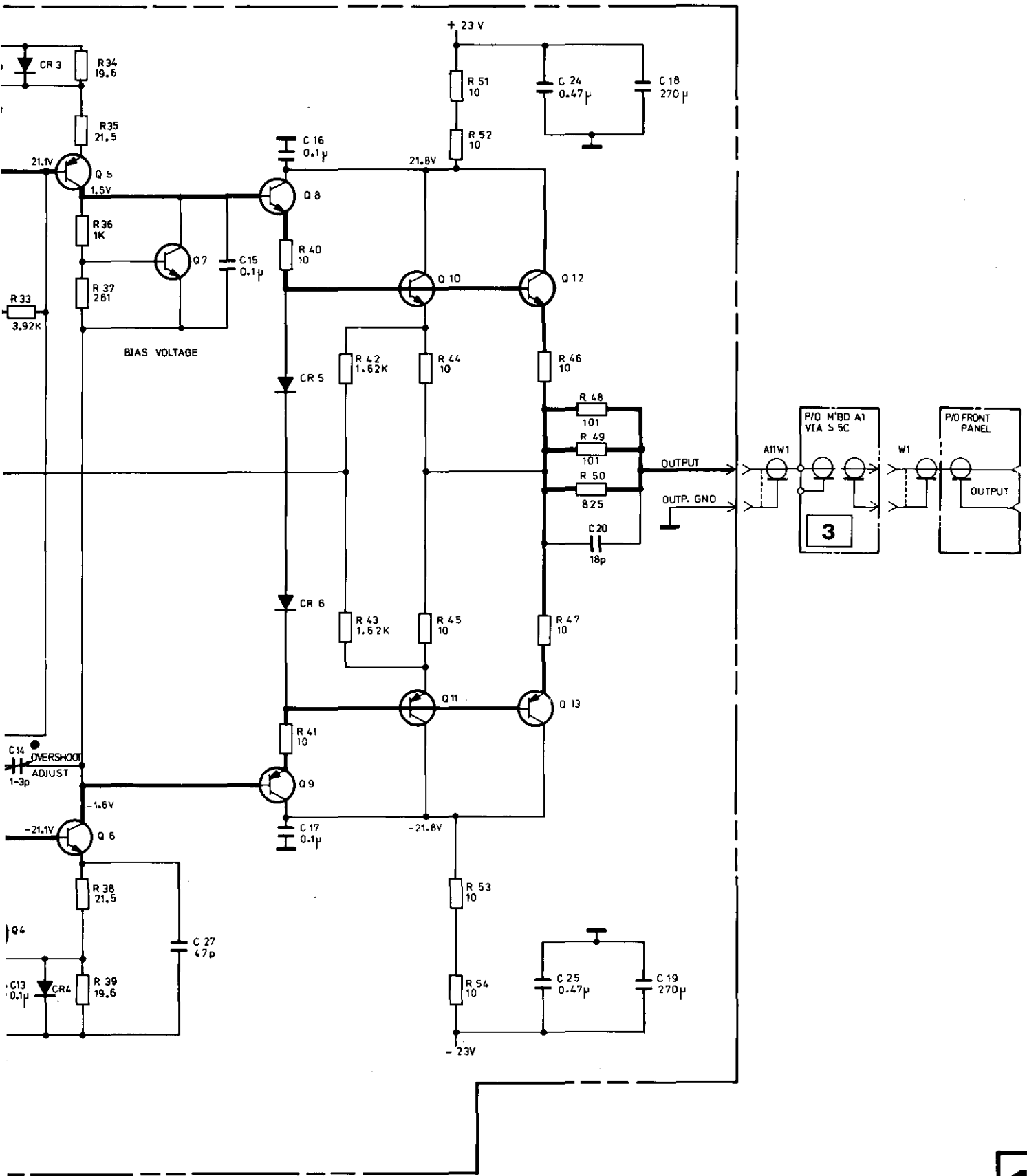

OUTPUT BOARD A8 **11**

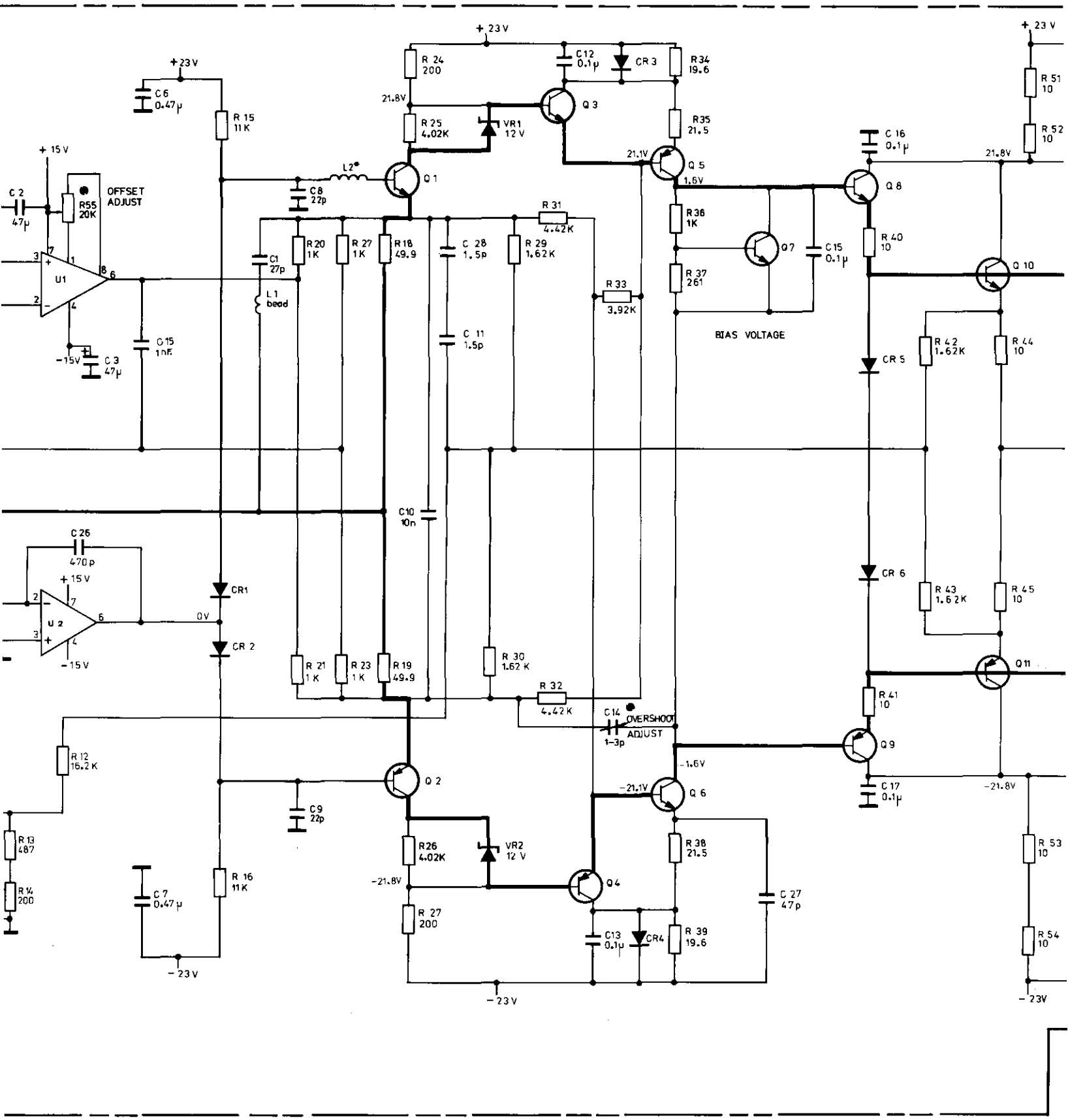

+23V
C6 0.47μ
R15 11K
+15V
C2 47μ
R55 20K
OFFSET ADJUST
U1
-15V
C3 47μ
C15 1nF
R24 200
21.8V
R25 4.02K
VR1 12V
C12 0.1μ
CR3
R34 19.6
Q3
R35 21.5
21.1V
Q5
1.6V
L2*
Q1
C8 22p
R31 4.42K
R20 1K
R27 1K
R18 49.9
C28 1.5p
R29 1.62K
C1 27p
L1 bead
R33 3.92K
C11 1.5p
R36 1K
Q7
C15 0.1μ
R37 261
BIAS VOLTAGE
C16 0.1μ
Q8
R40 10
Q10
R51 10
R52 10
21.8V
R42 1.62K
R44 10
CR5
C10 10n
C26 470p
U2
CR1
0V
CR2
R21 1K
R23 1K
R19 49.9
R30 1.62K
R32 4.42K
C14 1-3p
OVERSHOOT ADJUST
CR6
R43 1.62K
R45 10
Q11
R41 10
Q9
C17 0.1μ
-21.8V
R12 16.2K
Q2
C9 22p
-1.6V
-21.1V
Q6
R13 487
R14 200
R26 4.02K
VR2 12V
-21.8V
Q4
R38 21.5
C27 47p
R53 10
C7 0.47μ
R16 11K
R27 200
C13 0.1μ
CR4
R39 19.6
R54 10
-23V

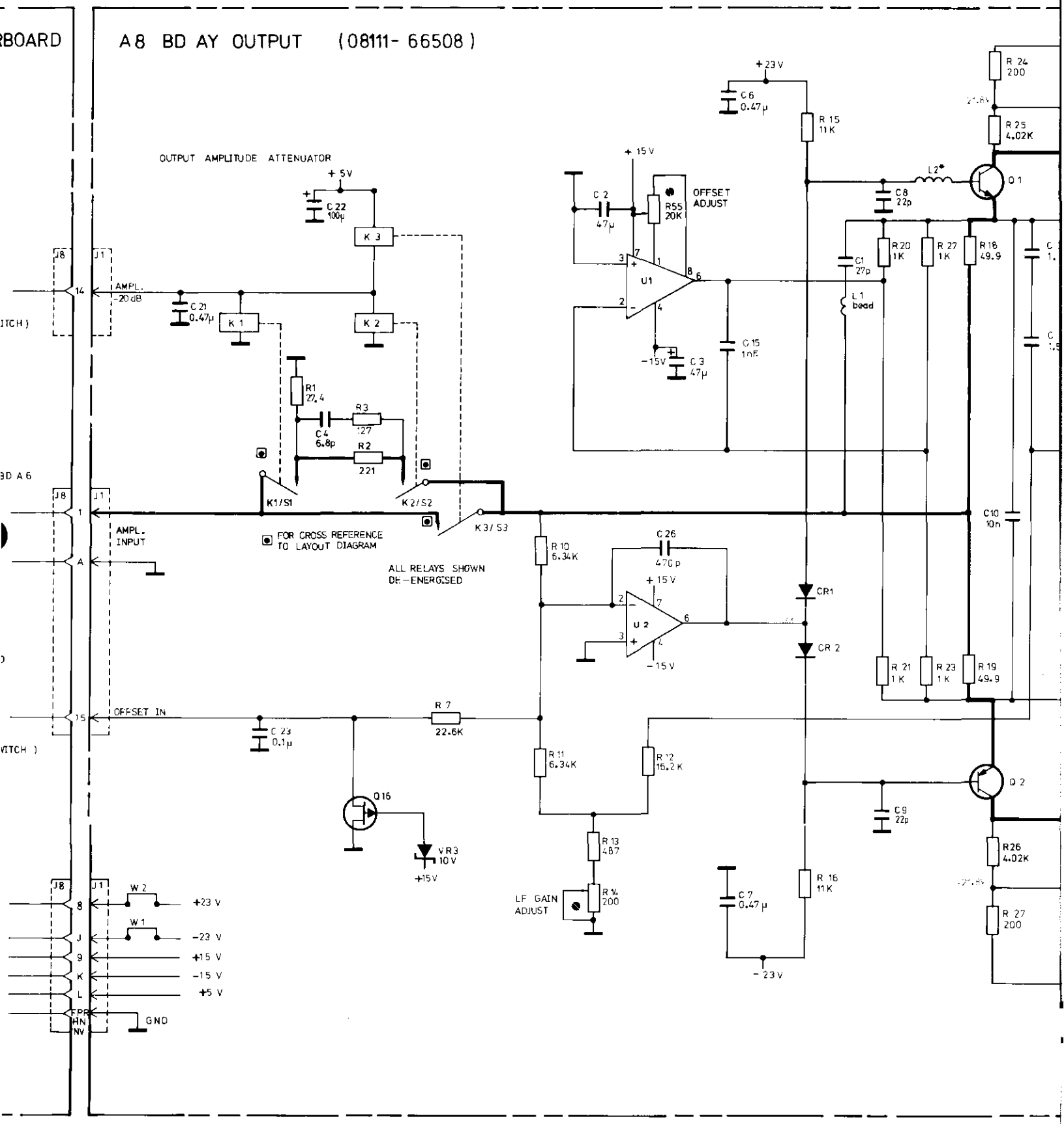

RBOARD
A8 BD AY OUTPUT (08111- 66508)
OUTPUT AMPLITUDE ATTENUATOR
+5V
C22 100µ
K3
K1
K2
C21 0.47µ
AMPL. -20dB
ITCH)
R1 27.4
R3 127
C4 6.8p
R2 221
K1/S1
K2/S2
K3/S3
BD A6
AMPL. INPUT
FOR CROSS REFERENCE TO LAYOUT DIAGRAM
ALL RELAYS SHOWN DE-ENERGISED
OFFSET IN
C23 0.1µ
R7 22.6K
Q16
VR3 10V
+15V
W2
W1
+23 V
-23 V
+15 V
-15 V
+5 V
GND
+15V
C2 47µ
R55 20K
OFFSET ADJUST
U1
-15V
C3 47µ
C15 1nF
+23V
C6 0.47µ
R15 11K
C8 22p
L2*
Q1
R24 200
R25 4.02K
C1 27p
L1 bead
R20 1K
R27 1K
R18 49.9
C10 10n
R10 6.34K
C26 470p
U2
CR1
CR2
R21 1K
R23 1K
R19 49.9
R11 6.34K
R12 15.2K
R13 487
R14 200
LF GAIN ADJUST
C7 0.47µ
R16 11K
-23V
C9 22p
Q2
R26 4.02K
R27 200

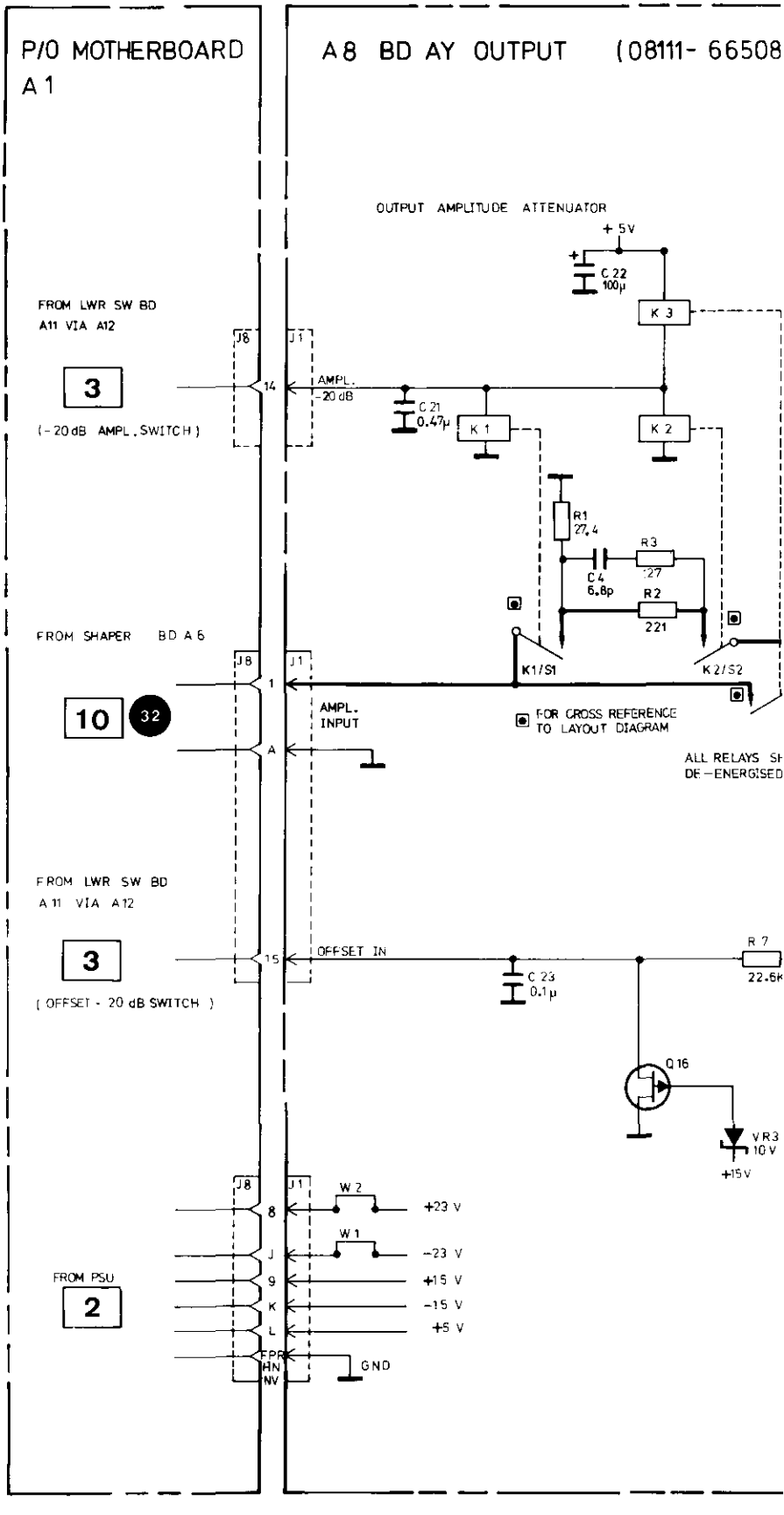
P/O MOTHERBOARD
A 1
A8 BD AY OUTPUT (08111- 66508
OUTPUT AMPLITUDE ATTENUATOR
+5V
C 22
100µ
K 3
FROM LWR SW BD
A11 VIA A12
3
(-20dB AMPL. SWITCH)
J8
J1
14
AMPL.
-20dB
C 21
0.47µ
K 1
K 2
R1
27.4
R3
:27
C 4
6.8p
R2
221
FROM SHAPER BD A 6
10
32
1
A
AMPL.
INPUT
K1/S1
K2/S2
FOR CROSS REFERENCE
TO LAYOUT DIAGRAM
ALL RELAYS SH
DE-ENERGISED
FROM LWR SW BD
A 11 VIA A12
3
(OFFSET - 20 dB SWITCH)
15
OFFSET IN
C 23
0.1µ
R 7
22.6K
Q 16
VR3
10 V
+15V
W 2
+23 V
W 1
-23 V
FROM PSU
2
8
J
9
K
L
+15 V
-15 V
+5 V
GND

OPERATING AND SERVICE MANUAL

8111A PULSE/FUNCTION GENERATOR 20 MHz

HEWLETT PACKARD

HEWLETT PACKARD

CERTIFICATION

Hewlett-Packard Company certifies that this product met its published specifications at the time of shipment from the factory. Hewlett-Packard further certifies that its calibration measurements are traceable to the United States National Bureau of Standards, to the extent allowed by the Bureau's calibration facility, and to the calibration facilities of other International Standards Organization members.

WARRANTY

This Hewlett-Packard product is warranted against defects in material and workmanship for a period of one year from date of shipment. During the warranty period, Hewlett-Packard Company will, at its option, either repair or replace products which prove to be defective.

HP warrants that its software and firmware designated by HP for use with an instrument will execute its programming instructions when properly installed on that instrument. HP does not warrant that the operation of the instrument, or software, or firmware will be uninterrupted or error free.

For products returned to HP for warranty service, Buyer shall prepay shipping charges to HP and HP shall pay shipping charges to return the product to Buyer. However, Buyer shall pay all shipping charges, duties, and taxes for products returned to HP from another country.

LIMITATION OF WARRANTY
The foregoing warranty shall not apply to defects resulting from improper or inadequate maintenance by Buyer, Buyer-supplied software or interfacing, unauthorized modification or misuse, operation outside of the environmental specifications for the product, or improper site preparation or maintenance.

NO OTHER WARRANTY IS EXPRESSED OR IMPLIED. HP SPECIFICALLY DISCLAIMS THE IMPLIED WARRANTIES OF MERCHANTABILITY AND FITNESS FOR A PARTICULAR PURPOSE.

EXCLUSIVE REMEDIES
THE REMEDIES PROVIDED HEREIN ARE BUYER'S SOLE AND EXCLUSIVE REMEDIES. HP SHALL NOT BE LIABLE FOR ANY DIRECT, INDIRECT, SPECIAL, INCIDENTAL, OR CONSEQUENTIAL DAMAGES, WHETHER BASED ON CONTRACT, TORT, OR ANY OTHER LEGAL THEORY.

ASSISTANCE

Product maintenance agreements and other customer assistance agreements are available for Hewlett-Packard products.

For any assistance, contact your nearest Hewlett-Packard Sales and Service Office. Addresses are provided at the back of this manual.

HEWLETT PACKARD

MANUAL CHANGES

03/94

Manual for Model Number	8111A
Manual printed on	Sept. 1984
Manual Part Number	08111-90002

Make all ERRATA corrections.

Check the following table for your instrument serial prefix/serial number and make the listed changes to your manual.

New Item

Serial Prefix or Serial Number		Manual Changes	Serial Prefix or Serial Number	Manual Changes
ERRATA				
2215G02366		1		
2215G02416	and above	1-2		
2519G02591	and above	1-3		
2519G02716	and above	1-4		
2519G02816	and above	1-5		
2519G03241	and above	1-6		
2519G03661	and above	1-7		
2519G03681	and above	1-8		
2519G03881	and above	1-9		
2519G04021	and above	1-10		
2519G04681	and above	1-11		
2519G04761	and above	1-12		
2519G05041	and above	1-13		
2519G05141	and above	1-14		
2849G05621	and above	1-15		
2849G06201	and above	1-16		
2849G06721	and above	1-17		
2849G06841	and above	1-18		
2849G07601	and above	1-19		
2849G08081	and above	1-20		
2849G08291	and above	1-21		
2849G08471	and above	1-22		

MODEL 8111A

INDEX OF MANUAL CHANGES

MANUAL CHANGE	MISCELLANEOUS	FRAME	A1	A2		A4	A5	A6	A7	A8	STANDARD
			A21		A3						OPTION 001
ERRATA	Page 2-1 Page 8-57 Page 6-16 Page 5-4,5-5										
1					C1,3,4,9, C10 thru C13	C13,16,19, C21,22	C20	C2 thru 6, C13,16	C6,7,8	C12,13,15,16, C17,23	
3		MP2,6,13,14, MP15,17,18, MP22						Q1			
4						R35					
5										K 1,2,3	
6	Page 6-12 Page 6-10							R3,13 *R3,13 C10			
7	Page 6-13									MP5,6,7,8,9, MP10,11,12	
8		MP18									
9	Page 6-12							U2			
10	Page 6-15				C4						
11						C8,9,12	C14,18,21	C8,9,11, C14,15	C1,2,5,9, C10	C6,7,21,24,25	

MODEL 8111A
INDEX OF MANUAL CHANGES

MANUAL CHANGE	MISCELLANEOUS	FRAME	A1 A21	A2	A3	A4	A5	A6	A7	A8	STANDARD OPTION 001
12					C4	C2	R49,53, R67,9				
14					U17						
15		MP 20,17, MP23,24, MP25,14, MP15									
16								R51			
17		J1-3									
18						C18		L2			
19			A1,C2	C15,18							
20							U1	U2			
21							R6, R7				
22							U1				

MODEL 8111A

INDEX OF MANUAL CHANGES

MANUAL CHANGE	MISCELLANEOUS	FRAME	A9	A10 A30	A11 A31	A12	A13	STANDARD OPTION 001
1				C5,8,9				
2	Page 8-42, Page 8-49		A9,C2, CR1,R11					
11			C1	C2,3				
13							S1	

ERRATA

On Page 2-1, Section II / Installation, change to read:

CAUTION

Do no change the LINE SELECTOR switch settings with the instrument on or with power connected to the rear panel.

2–9 Figure 2–1 provides information for line voltage and fuse selection:

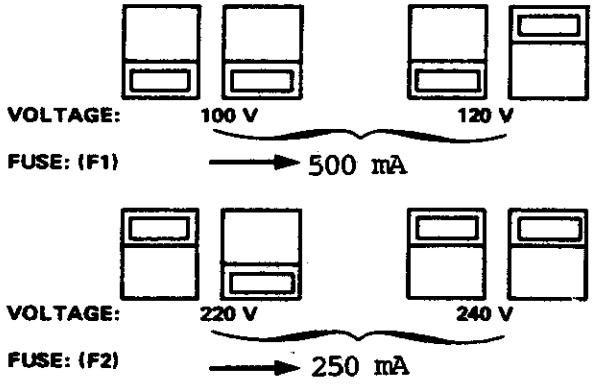

Figure 2–1. Sliding Switches Positions for different Line Voltages

On Page 8-57, VCO Board A5, change to read:

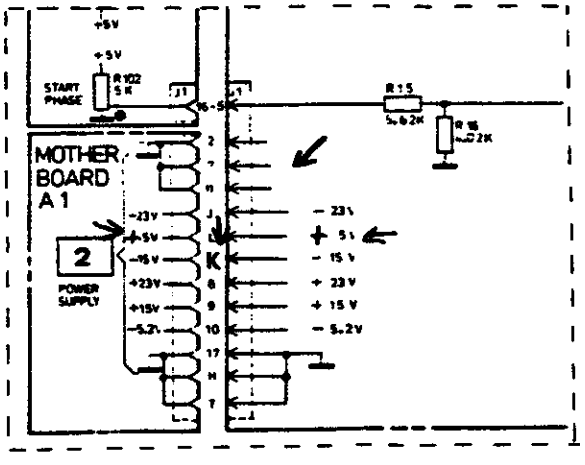

On Page 6-16, Replaceable parts list:

Delete: Q3,7 1853-0212

A21Q4,8 1854-0368

ERRATA (Cont.)

Page 5-4 Shaper Adjustment

change step 6 to read:
Adjust A6R6 for 8V +100mV - ØmV

add below step 12
NOTE: Steps 8 to 12 are interdependent and must therefor be repeated until the values are within tolerance.

Page 5-5

change step 14 to read:

Adjust A6R27 for 800mV +10mV -ØmV
change the NOTE to read:

NOTE: Readjust steps 1 to 6. Recheck steps 7 to 14 and readjust if necessary.

add to step 30:
Check again steps 1 to 14.

Page 6-12

change the Table of Replaceable Parts to read:

A8	C4	0160-3874	C-FXD 10PF 200V

ERRATA (Cont.)

On Page 4-8, Performance Tests 4-15, step 4., change to read:

8111A	Counter Reading
10%	4µs - 16µsec
20%	17µs - 23µsec
50%	47µs - 53µsec
---	--- ---
---	--- ---

On Page 4-15, Performance Tests Record, Step 4-15, change to read:

Duty Cycle	Minimum	Actual	Maximum
10%	4µs		16µs
20%	17µs		23µs
50%	47µs		53µs
---	---		---
---	---		---

On Page 8-50 (Component Layout + Ref.Desig.List) change to read:

C25 to C26

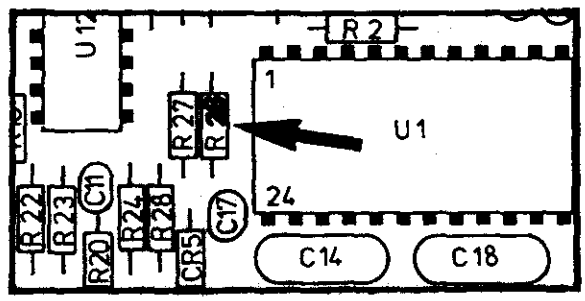

On Page 6-15, Table 6-3 Replaceable Parts OPTION 001, add:

MP1	4040-1969	FRONT PANEL, OPTION 001

MANUAL CHANGE 1

On Page 6-10 thru 6-16, change the Table of Replaceable Parts to read:

A3	C1,3,4, C10 thru 13		
A4	C13,16,19,21,22		
A5	C20		
A6	C2 thru 6 C13,16	0160-5746	C-FXD 0.1UF 20%
A7	C6,7,8		
A8	C12,13,15,16, C17,23		
A10	C5,8,9		
A30	C5,8,9		

MANUAL CHANGE 2

On Page 6-15, change the Table of Replaceable Parts to read:

	A9	08111-66519	PC-BD
Add:	C2	0180-0116	C-FXD 6.8UF 35V TA
	CR1	1901-0033	DIO 180V .2A
	R11	0698-4477	R-FXD 10.5K 1%

On Page 8-42, change Service Sheet 6 to read:

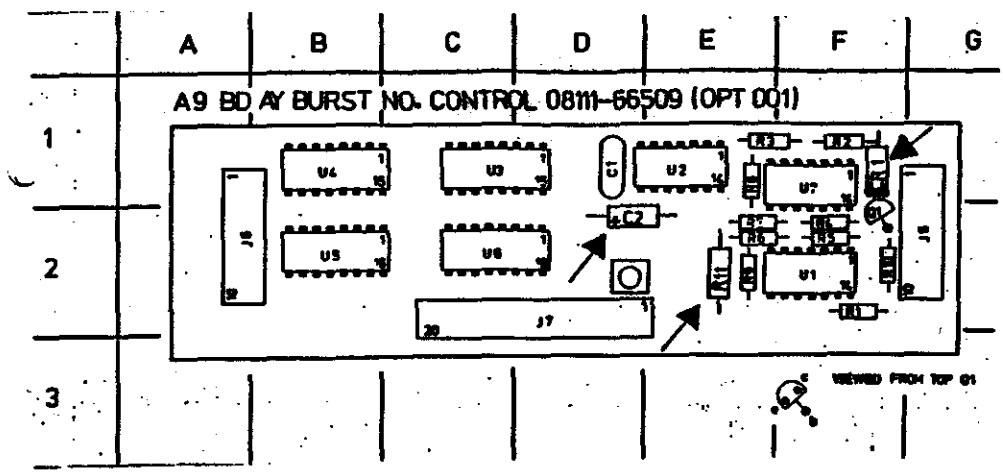

On Ref Des Table and Grid Loc add:

C2	D1
CR1	F1
R11	E2

MANUAL CHANGE 2 (Cont.)

On Page 8-49, change Schematic to read:

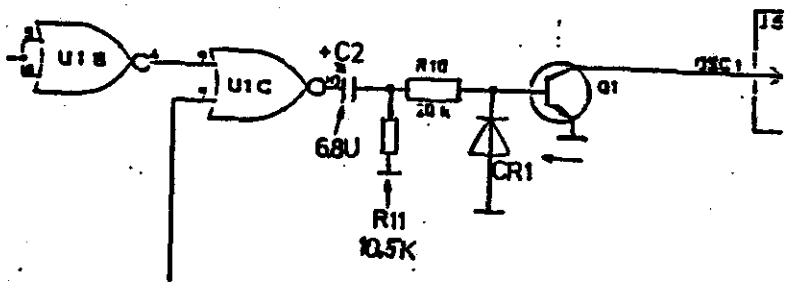

MANUAL CHANGE 3

IMPORTANT NOTE: New part numbers assigned to the following items since all threaded holes or screws are now METRIC!

On Page 6-7, change the Table of Replaceable Parts to read:

MP 2	08111-00211	PANEL SUB
MP 6	08111-01211	BRKT FRONT
MP13	08111-02315	HT SNK OUT HLDR
MP14	08111-04111	COVER TOP
MP15	08111-04112	COVER BOTTOM
MP17	5021-5813	FRAME FRONT
MP18	5021-0512	FRAME REAR
MP22	5021-5830	SIDE STRUT

On Page 6-12, change the Table of Replaceable Parts to read:

A6Q1	1853-0589	XSTR MD4260

MANUAL CHANGE 4

On Page 6-10, change the Table of Replaceable Parts to read:

A4R35	0698-4460	R-FXD 649 1% .125W

MANUAL CHANGE 5

On Page 6-13, change the Table of Replaceable Parts to read:

A 8 K 1,2,3	0490-1527	RELAIS REED

MANUAL CHANGE 6

On Page 6-12, Table 6-3., Replaceable Parts List:

ADD:	A6	*R3	0698-3202	R-FXD 1.74K 1%
	A6	-R3	0757-1094	R-FXD 1.47K 1%
	A6	*R13	0698-3136	R-FXD 17.8K 1%
	A6	-R13	0757-0441	R-FXD 8.25K 1%

DEL: A6 R3,13

On Page 6-10, change the Table of Replaceable Parts to read:

A5	C10	0180-3822	C-FXD 39UF 15V

MANUAL CHANGE 7

On Page 6-13, change the Table of Replaceable Parts to read:

A8	MP5,6,7,8, MP9,10,11,12	1205-0662	HT SINK SGL

MANUAL CHANGE 8

On Page 6-7, Replaceable Parts List, change to read:

MP18	5021-5814	FRAME REAR

MANUAL CHANGE 9

On Page 6-12, change the Table of Replaceable Parts to read:

A6	U2	1826-0923	IC 1DC7

MANUAL CHANGE 10

On Page 6-15, change the Table of Replaceable Parts to read:

A3	C4	0160-0575	C-FXD 47UF CER

MANUAL CHANGE 11

On Table 6-3, Replaceable Parts List, change to read:

A4	C8,9,12		
A5	C14,18,21		
A6	C8,9,11,14,15	0160-6596	C-FXD .47UF 20%
A7	C1,2,5,9,10		
A8	C6,7,21,24,25		
A9	C1		
A10	C2,3		
A30	C2,3		

MANUAL CHANGE 12

On Page 6-9, change the Table of Replaceable Parts to read:

A4	C2	0160-5739	C-FXD 15PF 5%

On Page 6-11, change the Table of Replaceable Parts to read:

A5	R49	0757-0441	R-FXD 8,25K 1%
	R53,67	0698-0085	R-FXD 2,61K 1%
	R9	0757-0528	R-FXD 1,62K 1%
A3	C4	0160-0574	C-F .022UF 20%

MANUAL CHANGE 13

On Page 6-14, Replaceable Parts List, change to read:

A13	S1	3101-2953	SW-LINE

MANUAL CHANGE 14

On Page 6-14, change the Table of Replaceable Parts to read:

A3	U17	1820-3841	IC 74AS168

MANUAL CHANGE 15

On Page 1-2, 1-27. Accessories, change to read:

5061-2001	to	5062-4001
5061-0072	to	5062-3972
5061-0074	to	5062-3974

On Page 6-7, Replaceable Parts List,change to read:

MP20	5001-0538	TRIM STRIP
MP17	5021-8413	FRAME FRONT 1/2M
MP23	5041-8801	FOOT
MP24	5041-8803	TRIM STRIP
MP25	5061-8822	FOOT REAR N-SKID
MP14	08111-04121	COVER TOP
MP15	08111-04122	COVER BOTTOM

MANUAL CHANGE 16

On Page 6-12, Replaceable Parts List, change to read:

A6	R51	0757-0422	R-FXD 909

MANUAL CHANGE 17

On Page 6-7, change the Table of Replaceable Parts to read:

J1-3	1250-0083	CONN BNC BLKHD

MANUAL CHANGE 18

On Page 6-10, change the Table of Replaceable Parts to read:

A4	C18	0160-5736	C-FXD 22PF 5%

MANUAL CHANGE 18 (Cont.) .

On Page 6-11, Replaceable Parts List,

add:	A6	L2	9170-0894	BEAD

BEAD MUST BE INSERTED IN BASE-WIRE OF Q2!

Change Schematic, Page 8-71 to read:

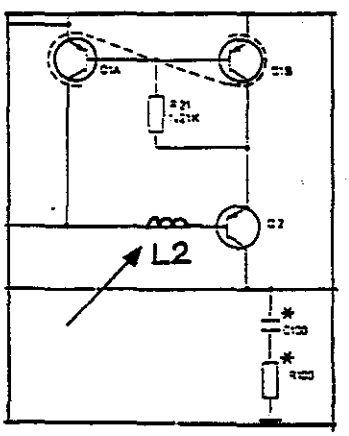

Change Component Layout, Page 8-66, to read:

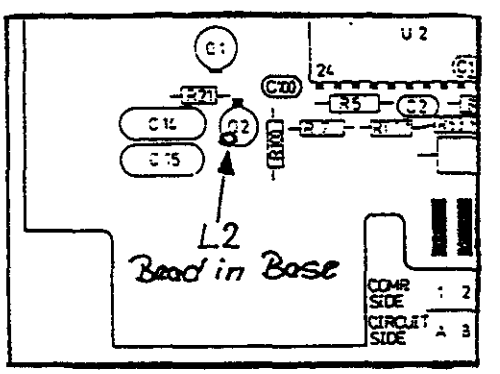

MANUAL CHANGE 19

On Page 6-9, Change the Table of Repl.Parts to read:

A1	C2	0180-3158	C-F 6800UF	(EDC-LBL:A-3217)
A2	C15,18	0180-3157	C-F 47uF 40V	(EDC-LBL:A-3217)

MANUAL CHANGE 20

On Page 6-11, Repl.Parts List, Change to read:

A5	U1	1DB6-0001	IC SNAKE	(EDC-LBL:B-3310)
A6	U2	1DC7-0001	IC BOOSTER	(EDC-LBL:B-3310)

MANUAL CHANGE 21

On Page 6-11, Repl.Parts List, change to read:

A5	R6,7	0757-0274	RES 1.21k 1%	(EDC-LBL:B-3343)

MANUAL CHANGE 22

On Page 6-11, Repl.Parts List change to read:

A5	U1	1826-0955	IC 1DB6	EDC-LBL: B-3408

HEWLETT
PACKARD
Böblingen Instruments Division

Herstellerbescheinigung

Hiermit wird bescheinigt, daß das Gerät/System

Puls-Generator HP 8111A

in Übereinstimmung mit den Bestimmungen von Postverfügung 1046/84 funkentstört ist.

Der Deutschen Bundespost wurde das Inverkehrbringen dieses Gerätes/Systems angezeigt und die Berechtigung zur Überprüfung der Serie auf Einhaltung der Bestimmungen eingeräumt.

Zusatzinformation für Meß- und Testgeräte

Werden Meß- und Testgeräte mit ungeschirmten Kabeln und/oder in offenen Meßaufbauten verwendet, so ist vom Betreiber sicherzustellen, daß die Funk-Entstörbestimmungen unter Betriebsbedingungen an seiner Grundstücksgrenze eingehalten werden.

Manufacturer`s declaration

This is to certify that the equipment

Pulse Generator HP 8111A

is in accordance with the Radio Interference Requirements of Directive FTZ 1046/1984. The German Bundespost was notified that this equipment was put into circulation, the right to check the serie for compliance with the requirements was granted.

Additional Information for Test- and Measurement Equipment

If Test- and Measurement Equipment is operated with unscreened cables and/or used for measurements on open set-ups, the user has to assure that under operating conditions the Radio Interference Limits are still met at the border of his premises.

Hewlett Packard GmbH, 30. Juni 1985

253518

SAFETY SUMMARY

The following general safety precautions must be observed during all phases of operation, service, and repair of this instrument. Failure to comply with these precautions or with specific warnings elsewhere in this manual violates safety standards of design, manufacture, and intended use of the instrument. Hewlett-Packard Company assumes no liability for the customer's failure to comply with these requirements.

GENERAL – This is a Safety Class I instrument (provided with terminal for protective earthing) and has been manufactured and tested according to international safety standards.

OPERATION – BEFORE APPLYING POWER comply with the installation section. Additionally, the following shall be observed:

Do not remove instrument covers when operating.

Before the instrument is switched on, all protective earth terminals, extension cords, auto-transformers and devices connected to it should be connected to a protective earth via a ground socket. Any interruption of the protective earth grounding will cause a potential shock hazard that could result in serious personal injury.

Whenever it is likely that the protection has been impaired, the instrument must be made inoperative and be secured against any unintended operation.

Make sure that only fuses with the required rated current and of the specified type (normal blow, time delay, etc.) are used for replacement. The use of repaired fuses and the short-circuiting of fuseholders must be avoided.

Adjustments described in the manual are performed with power supplied to the instrument while protective covers are removed. Energy available at many points may, if contacted, result in personal injury.

Any adjustment, maintenance, and repair of the opened instrument under voltage should be avoided as much as possible, and when inevitable, should be carried out only by a skilled person who is aware of the hazard involved. Do not attempt internal service or adjustment unless another person, capable of rendering first aid and resuscitation is present. Do not replace components with power cable connected.

Do not operate the instrument in the presence of flammable gases or fumes. Operation of any electrical instrument in such an environment constitutes a definite safety hazard.

Do not install substitute parts or perform any unauthorized modification to the instrument.

Capacitors inside the instrument may still be charged even if the instrument has been disconnected from its source of supply.

SAFETY SYMBOLS

The apparatus will be marked with this symbol when it is necessary for the user to refer to the instruction manual in order to protect the apparatus against damage.

Indicates dangerous voltages.

Earth terminal

WARNING The WARNING sign denotes a hazard. It calls attention to a procedure, practice or the like, which, if not correctly performed or adhered to, could result in injury or loss of life. Do not proceed beyond a WARNING sign until the indicated conditions are fully understood and met.

CAUTION The CAUTION sign denotes a hazard. It calls attention to an operating procedure, practice, or the like, which, if not correctly performed or adhered to, could result in damage to or destruction of part or all of the equipment. Do not proceed beyond a CAUTION sign until the indicated conditions are fully understood and met.

WARNING

Dangerous voltages, capable of causing serious personal injury, are present in this instrument. Use extreme caution when handling, testing, and adjusting.

OPERATING AND SERVICE MANUAL

8111A PULSE/FUNCTION GENERATOR 20 MHz

(Including Option 001)

SERIAL NUMBERS

This manual applies directly to instrument with serial number 2215G01841 and higher. Any change made in instruments having serial numbers higher than the above number will be found in a "Manual Changes" supplement supplied with this manual. Be sure to examine the supplement for changes which apply to your instrument and record these changes in the manual. Backdating information for instruments with lower serial numbers can be found in Section 7 (yellow pages).

© HEWLETT-PACKARD GMBH 1984
HERRENBERGER STR. 130, D-7030 BOBLINGEN
FEDERAL REPUBLIC OF GERMANY

MANUAL PART No. 08111-90002
MICROFICHE PART No. 08111-95002

PRINTED: SEP 1984

LIST OF CONTENTS

		Page
Section 1	General Information	
1–1	Introduction	1–1
1–4	Specifications	1–1
1–6	Safety Considerations	1–1
1–8	Instruments Covered by Manual	1–1
1–10	Description	1–1
1–13	8111A Options	1–1
1–15	Accessories Supplied	1–1
1–17	Accessories Available	1–2
1–18	Recommended Test Equipment	1–2
Section 2	Installation	
2–1	Introduction	2–1
2–3	Initial Inspection	2–1
2–5	Preparation for Use	2–1
2–6	Power Requirements	2–1
⚠ 2–8	Line Voltage Selection	2–1
2–10	Power Cable	2–2
2–13	Operating Environment	2–2
2–14	Claims and Repackaging	2–2
2–15	Claims for Damage	2–2
2–17	Storage and Shipment	2–2
Section 3	Operating Instructions	
3–1	Introduction	3–1
⚠ 3–3	Special Operating Considerations	3–1
3–5	Operating Instructions	3–1
3–6	Input Mode Selection	3–1
3–7	NORMAL Mode	3–1
3–9	TRIGGER/GATE/BURST Input Modes	3–1
3–11	External Trigger Mode (TRIGGER)	3–1
3–13	Gate Mode (GATE)	3–2
3–15	Burst Mode (BURST)	3–2
3–17	Voltage-controlled Oscillator Mode (VCO)	3–2
3–19	Function, FREQUENCY and DUTY cycle/WIDTH Selection	3–3
3–21	FREQUENCY display and adjustment	3–3
3–23	DUTY CYCLE display and adjustment	3–3
3–25	WIDTH display and adjustment	3–3
3–27	ERROR Signal	3–3
3–30	START PHASE Variation	3–4
3–32	AMPLITUDE and OFFSET display and adjustment	3–4
3–34	AMPLITUDE, OFFSET and OUTPUT Attenuation	3–4
3–36	OUTPUT MODE Selection	3–4

Page

Section 4 Performance Tests

4–1 Introduction 4–1
4–3 Equipment Required 4–1
4–5 Test Record 4–1
4–7 Performance Tests 4–1
4–10 Frequency 4–2
4–11 Amplitude and Attenuation 4–4
4–12 Offset 4–5
4–13 Pulse Characteristics 4–6
4–14 Sine Characteristics 4–7
4–15 Duty Cycle 4–8
4–16 Width 4–9
4–17 Trigger, Gate, Burst 4–11
4–18 VCO-Mode 4–13

Section 5 Adjustments

5–1 General 5–1
5–2 Pre-Adjustments 5–1
5–3 VCO Adjustments 5–2
5–4 Shaper Adjustment 5–4
5–5 Width Adjustment 5–6

Section 6 Replaceable Parts

6–1 Introduction 6–1
6–3 Abbreviations 6–1
6–5 Replaceable Parts 6–1
6–8 Ordering Information 6–1

Section 7 Backdating

7–1 Introduction 7–1
7–3 Change Sequence 7–1

Section 8 Service

8–1 Introduction 8–1
8–4 Safety Considerations 8–1
8–6 After Service Safety Check 8–1
8–15 Service Blocks (Theory/Troubleshooting) 8–1
8–18 IC Information 8–2

Service Block 1 Problem Area Identification 8–15
Service Block 2 Power Supply 8–21
Service Block 3 Switch Boards 8–27
Service Block 4 Control Board 8–31
Service Block 5 Display Board 8–37
Service Block 6 Burst Boards 8–43

		Page
Service Block 7	VCO Board	8–51
Service Block 8	Width Generator	8–59
Service Block 9	Shaper Board	8–67
Service Block 10	Output Board	8–73

LIST OF TABLES

Table	Title	Page
1–1	Recommended Test Equipment	1–2
1–2	Specifications	1–3
3–1	VCO Mode Example Values	3–2
3–2	Sweepable Bands in VCO Mode	3–3
4–1	Frequency Limits	4–3
6–1	Reference Designators and Abbreviations	6–2
6–3	Replaceable Parts List	6–7
7–1	Manual Backdating Changes	7–1
8–1	Index of Assemblies	8–1
8–2	Index to Service Blocks	8–2
8–3	Schematic Diagram Notes	8–3
8–3–1	U 11 Truth Table	8–27
8–3–2	U 11 Truth Table	8–27
8–3–3	U 11, U 12 Truth Tables	8–28
8–4–1	U 6, U 11 Truth Table	8–32
8–4–2	U 8 Truth Table	8–32
8–4–3	U 9 Truth Table	8–33
8–4–4	U 12 Truth Table	8–33
8–8–5	U 13 Truth Table	8–33
8–4–6	U 17 Truth Table	8–34
8–5–1	Display Required/DVM Input Voltages	8–39
8–7–1	Test Voltages for Current Sources	8–54
8–7–2	Voltage Drops across Range Resistors	8–54
8–7–3	I up Values	8–55
8–8–1	Range Decoder (U 5) Troth Table	8–63
8–9–1	Waveform and Output Mode Selection	8–69

LIST OF ILLUSTRATIONS

Figure	Title	Page
1–1	8111A and Supplied Accessories	1–0
2–1	Line Voltage Switch Positions	2–1
2–2	Power Cables Available: Plug Identification	2–2
3–1	Controls and Connectors	3–0
3–2	Normal Mode	3–1
3–3	Trigger Mode	3–1

		Page
3–4	Gate Mode	3–2
3–5	Burst Mode	3–2
3–6	Start Phase Variation	3–4
3–7	Output Mode Differences	3–4
4–1	Frequency Test Set-up	4–2
4–2	Amplitude and Attenuation Test Set-up	4–4
4–3	Offset Test Set-up	4–5
4–4	Pulse Characteristic Test Set-up	4–6
4–5	Sine Characteristic Test Set-up	4–7
4–6	Duty Cycle Test Set-up	4–8
4–7	Width Test Set-up	4–9
4–8	Trigger, Gate, Burst Test Set-up	4–11
4–9	VCO-Mode Test Set-up	4–13
5–4	Adjustments Points Diagram	5–1
6–1	Frame Parts Diagram	6–6
8–1–1	8111A Block Diagram	8–14
8–1–2	8111A Block Diagram Overview	8–15
8–1–3	Troubleshooting Tree	8–16
8–2–1	Simplified Voltage/Current Regulating/Limiting Circuits	8–21
8–2–2	Principle of Fixed Positive Voltage Regulator	8–22
8–2–3	Principle of Fixed Negative Voltage Regulator	8–22
8–2–4	Current Monitor	8–22
8–2–5	Summing Current Monitor	8–22
8–2–6	Fault Condition Output Waveforms	8–23
8–4–1	Simplified Control Board Block Diagram	8–31
8–5–1	Simplified Dual Slope Integrating DVM	8–37
8–5–2	Dual Slope Integration Measurement Sequence	8–37
8–6–1	Burst Block Diagram	8–43
8–6–2	Burst Timing Diagram	8–44
8–6–3	Burst No. Display Timing Diagram	8–45
8–6–4	A3 Troubleshooting Data	8–46
8–6–5	Burst No. Control A9 Troubleshooting Wave forms	8–46
9–9–6	Burst No. Display Counter Troubleshooting Data	8–46
8–7–1	Simplified VCO Board Block Diagram	8–51
8–7–2	Troubleshooting Test Points	8–55
8–8–1	Simplified Width Board Block Diagram	8–59
8–8–2	Simplified Current Source Circuit	8–60
8–8–3	Simplified Width Range Selector Diagram	8–61
8–8–4	Error Detection Timing Diagram	8–61
8–8–5	Width Troubleshooting Diagram	8–62
8–9–1	Simplified Shaper Board Block Diagram	8–67
8–9–2	Current Mirror Operating Principle	8–68
8–9–3	Input Signals	8–68
8–10–3	Simplified Output Amplifier	8–73
8–10–2	HF Amplifier Simplified Diagram	8–73
8–10–3	Offset Control	8–74

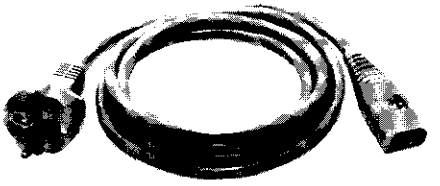

FUSE F1 or F2
375 mA 750 mA

POWER CORD

Figure 1–1. 8111A and Supplied Accessories (Instrument shown with Option 001 fitted).

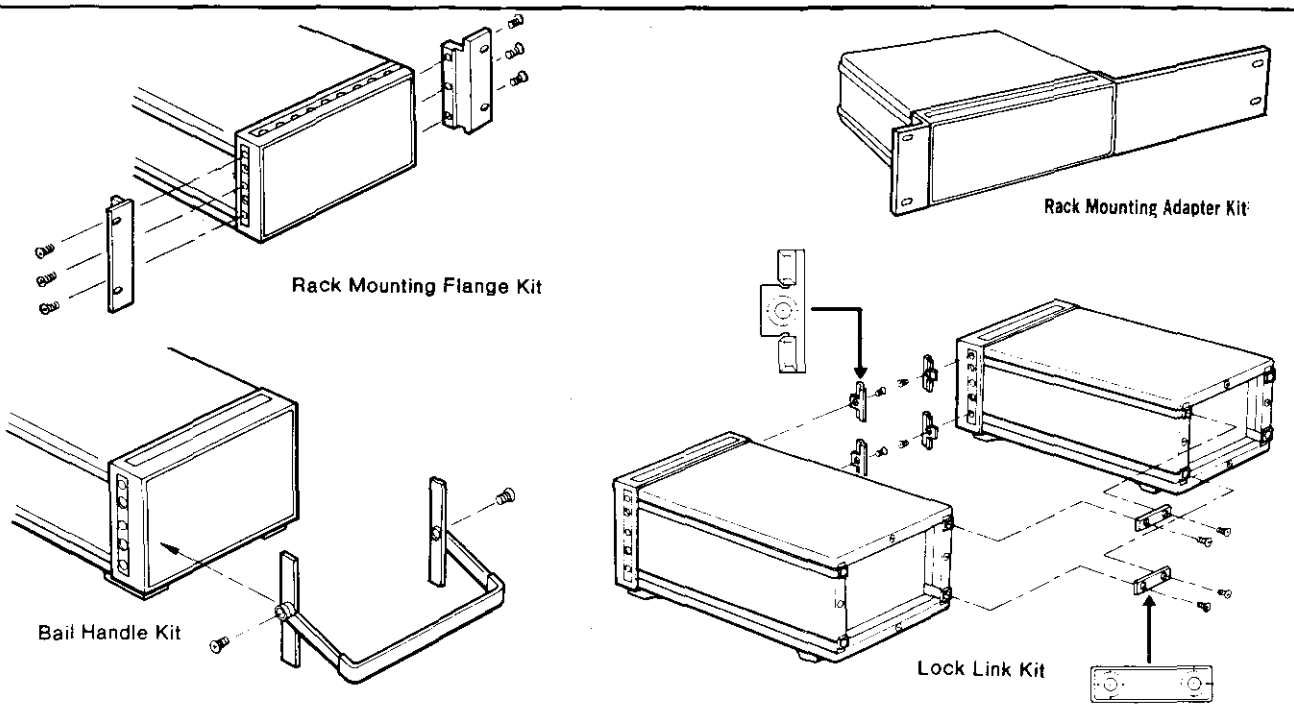

Figure 1–2. Available Rack Mounting Accessories

SECTION I
GENERAL INFORMATION

1–1 INTRODUCTION

1–2 This Operating and Service Manual contains information required to install, operate, test, adjust and service the Hewlett-Packard Model 8111A. Figure 1–1 shows the mainframe and accessories supplied. This section covers instrument identification, description, accessories, specifications, and other basic information.

1–3 A Microfiche version of this manual is available on 4 x 6 inch microfilm transparencies (order number on title page). Each microfilm contains up to 60 photoduplicates of the manual pages. The microfiche package also includes the latest Manual Changes supplement as well as all pertinent Service Notes.

1–4 SPECIFICATIONS

1–5 Instrument specifications are listed in Table 1–2. These specifications are the performance standards or limits against which the instrument is tested.

1–6 SAFETY CONSIDERATIONS

1–7 The 8111A is a Safety Class 1 instrument (it has an exposed metal chassis that is directly connected to earth via the power supply cable). Before operation, the instrument and manual, including the red safety page, should be reviewed for safety markings and instructions. These must then be followed to ensure safe operation and to maintain the instrument in a safe condition.

1–8 INSTRUMENTS COVERED BY MANUAL

1–9 Attached to the rear of this instrument is a serial number plate (Figure 1–3). The first four digits of the serial number only change when there is a significant change to the instrument. The last five digits are assigned to instruments sequentially. The contents of this manual apply directly to the instrument serial number quoted on the title page. For instruments with lower serial numbers, refer to the backdating information in Section VII of this manual. For instruments with higher serial numbers, refer to the Manual Change sheets at the end of this manual. In addition to change information, the Manual Change sheets may contain information for correcting errors in the manual. To keep this manual as up-to-date and accurate as possible, Hewlett-Packard recommends that you periodically request the latest Manual Change supplement. The supplement for this manual is identified with the manual's print date and part number, both of which appear on this manual's title page. Complimentary copies of the supplement are available from Hewlett-Packard.

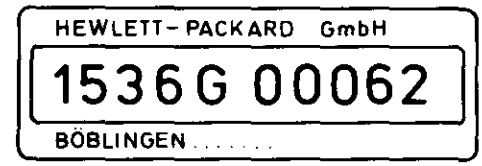

Figure 1–3. Serial Number Plate

1–10 DESCRIPTION

1–11 The 8111A is a 20 MHz, pulse/function generator suited to bench, production or service applications. It is available as either a standard instrument or, when fitted with option 001, as a pulse/function generator complete with counted burst mode capability. A carrying handle can be fitted and rackmounting adaptors are available.

1–12 The combination of front panel controls – pushbuttons and verniers – together with the digital display enables quick and easy setting up of complete waveforms with minimum (if any) requirement for additional test equipment.

1–13 8111A OPTIONS

1–14 **Option 001**. The standard 8111A can have its versatility further increased by the addition of option 001 which provides a counted burst mode capability. **Option 910** provides an extra copy of the Operating and Service Manual.

1–15 ACCESSORIES SUPPLIED

1–16 The 8111A is supplied complete with the following items:

ITEM	HP PART NUMBER
375 mA fuse for 220/240 V operation or,	2110–0421
750 mA fuse for 100/120 V operation	2110–0360
Power cable	See Figure 2–2

1–17 ACCESSORIES AVAILABLE

ITEM	HP PART NUMBER
Carrying handle -	
Bail Handle Kit	5061–2001
Rack mounting adaptors:	
Rack mounting flange and filler panel for rack mounting a single 8111A	5061–0072
Rack mounting flange	5061–0074
and lock link kit	5061–0094
for rack mounting two 8111As	

1–18 RECOMMENDED TEST EQUIPMENT

1–19 Equipment required to maintain the 8111A is listed in Table 1–1. Alternative equipment can be substituted provided that it meets or exceeds the critical specifications listed in the table.

Table 1–1. Recommended Test Equipment

INSTRUMENT	RECOMMENDED MODEL	REQUIRED CHARACTERISTICS	ADEQUATE SUBSITUTE	USE *
Counter	HP 5328A	20 MHz, Start/Stop	HP 5345A	P, A
DMM	HP3466	0.1mA - 10mA, DC	HP3465A	T
DVM	HP3455A	0.1V - 32V, AC, DC	HP3456A	P,A,T
Real Time Scope	HP 1740A	100 MHz Bandwidth	HP 1743A	P, A, T
Sampling Scope	Tek 7603 with 7T11/7S11 and S–3A	Dual channel	HP 140A/ 1410A	P, A, T
Spectrum Analyzer	HP 3580A	1 kHz – 10 kHz		P, A
or				
Distortion Analyzer	HP 339A	1 kHz – 10 kHz	HP 3585A	P, A
Spectrum Analyzer	HP 181T 8557A	500 kHz – 20 MHz		P
Pulse Generator	HP 8012B	1 Hz – 20 MHz	HP 8011A	P, A
Logic Probe	HP 545A	TTL, CMOS		T
Logic Probe	HP 10525E	ECL		T
BNC 50 Ohm Term.	10100C	50 Ohm, 2 W, 1 % Feedthrough		
Power Supply	HP 6237B	0 – 20 V	HP 6205B	A
Service Accessory				
Extender board	5060–5983	2x18 pin		T
Extender brd	5061-2160	2 x 25 pin		T
Extender cble	5180-2432			T

* P = Performance Test; A = Adjustments; T = Troubleshooting

Table 1–2. Specifications

SPECIFICATIONS

(Specifications describe the instrument's warranted performance)
The following specifications apply with 50 Ohm load resistance in a temperature range of 0° to 55°C. Output levels double when driving into high impedance (up to 32 Vpp).

WAVEFORMS

Sine, Triangle, Ramp, Square, Pulse, Haversine, Havertriangle

TIMING CHARACTERISTICS

Frequency
Range: 1.00 Hz to 20.0 MHz
Resolution: 3 digits
Accuracy: ± 5% of setting (10.0 Hz to 20.0 MHz)
(50% duty cycle) ± 10% of setting (1.00 Hz to 9.99 Hz)
Repeatability: Factor 2.5 better than accuracy
Jitter: < 0.1% + 50 ps
Stability: ± 0.2% (1 hour)
± 0.5% (24 hours)

Duty Cycle (sine, triangle, square)
Range: 10% to 90% (1 Hz to 999 kHz)
50% fixed (1 Hz to 20 MHz)
Resolution: 1%
Accuracy (1 Hz to 999 kHz): ± 1 digit, 50% fixed
± 3 digits, 20% to 80%
± 6 digits, 10% to 20% and 80% to 90%

Pulse Width
Range: 25 ns to 100 ms
Resolution: 3 digits
Accuracy: ± 5% of setting ± 2 ns
Repeatability: Factor 2.5 better than accuracy
Jitter: < 0.1% + 50 ps
Max. duty cycle: > 75% (1 Hz to 1 MHz), decreasing to > 50% at 20 MHz

OUTPUT CHARACTERISTICS

Output Impedance: 50 Ohm ± 5%. Reflection < 10%

Amplitude/Offset
Amplitude and offset are independently variable within the following two level windows.

Level window	± 80.0 mV	± 8.00V
Ampl. range	1.60 mVpp to 159.9 mVpp	160 mVpp to 16.00 Vpp
Ampl. resolution	3 1/2 digits	3 1/2 digits
Ampl. accuracy*	± 5% [0.45 dB]	± 5% [0.45 dB]
Ampl. repeatability	Factor 2.5 better than accuracy	
Offset range	0 to ± 80.0 mV	0 to ± 8.00V
Offset resolution	3 digits (best case 10 μV)	3 digits (best case 1 mV)
Offset accuracy	± 5% of setting ± 2% of amplitude ± 1 mV	± 5% of setting ± 2% of amplitude ± 20 mV
Offset repeatability	Factor 2.5 better than accuracy	

*The amplitude accuracy for sine and triangle is specified at 1 kHz. For other frequencies see the following flatness specifications.

Amplitude Flatness (50% duty cycle)	Sine	Triangle
1.00 Hz to 999 kHz	± 3% [0.26 dB]	± 3%
1.00 MHz to 20.0 MHz	± 10% [0.92 dB]	+ 10% − 15%

WAVEFORM CHARACTERISTICS

Sine (normal mode, 50% duty cycle, symmetrical mode)
Total Harmonic Distortion (THD):
< 1% [-40 dB], (10 Hz - 99.9 kHz)
< 3% [-30 dB], (100 kHz - 999 kHz)
Harmonic Signals: more than 26 dB below fundamental (1 MHz – 20 MHz) for amplitudes > 10 mVpp
THD and Harmonic Signal Distorsion may increase by 3 dB below 10°C and above 45°C

Triangle, Ramp
Non-linearity: < ± 1% (10 Hz to 99.9 kHz)
< ± 3% (1 Hz to 9.9 Hz and 100 kHz to 1 MHz)
(measured between 10% to 90% of amplitude)

Square, Pulse
Rise/Fall time: < 10 ns (10% to 90% of amplitude)
Pulse Perturbations: < ± 5% of amplitude (≥ 0.16 Vpp)
< ± 10% of amplitude (< 0.16 Vpp)

Output Modes
Switchselectable POSITIVE, NEGATIVE, SYMMETRICAL and NORMAL/COMPLEMENT output signal.

OPERATING MODES

Normal: Continuous waveform is generated
Trigger: Each input cycle generates a single output cycle
Gate: External signal enables oscillator. First output cycle synchronous with active trigger slope. Last cycle always completed.
VCO: External voltage linearly sweeps 2 full frequency decades. The actual frequency is displayed.
Modulation range: 1:100 with 0.1V to 10V
Modulation bandwidth: dc to 1kHz
Burst: Each input cycle generates a preprogrammed number (1 to 1999) of periods. Minimum time between bursts is 200 ns. (Option 001)

SUPPLEMENTARY PERFORMANCE CHARACTERISTICS

(Description of non-warranted typical performance parameters)

Ext Input: Threshold Level: 1.4V fixed
Max input voltage: ± 20V
Sensitivity: 500 mVpp
Min pulse width: 25 ns
Input impedance: 10 kOhm
Trigger slope: positive

Start Phase: Adjustable from −90° to +90°.
Usable range may decrease to −90° to 0° at 20 MHz.
Haversine and Havertriangle can be generated.

Trigger Output: TTL compatible output signal.

Man: Simulates external input.

1 Cycle: Provides a single output period in TRIG, GATE and BURST mode.

GENERAL

Warm-up Time: 15 min to meet all specifications.
Environmental: Storage temperature: -40° C to 75° C
Operating temperature: 0° C to 55° C
Humidity range: 95% R.H., 0° C to 40° C

Power: 100/120/220/240 V rms + 5%, -10%, 48-440 Hz; 70 VA max.

Weight: Net 4.6 kg (10 lbs), Shipping 6.6 kg (15 lbs)
Dimensions: 89 mm high, 213 mm wide, 375 mm deep (3.5 x 8.4 x 14.8 in)

Options: 001 Counted Burst
910 Additional Operating & Service Manual

Data subject to change

SECTION II
INSTALLATION

2–1 INTRODUCTION

2–2 This section provides installation instructions for the instrument and its accessories. It also includes information about initial inspection and damage claims, preparation for use, and packaging, storage and shipment.

2–3 INITIAL INSPECTION

2–4 Inspect the shipping container for damage. If the container or cushioning material is damaged, it should be kept until the contents of the shipment have been checked for completeness and the instrument has been checked mechanically and electrically. The contents of the shipment should be as shown in Figure 1–1 plus any accessories that were ordered with the instrument. Procedures for checking the electrical operation are given in Section 4. If the contents are incomplete, if there is a mechanical damage or defect, or if the instrument does not pass the operator's checks, notify the nearest Hewlett-Packard office. Keep the shipping materials for carrier's inspection. The HP office will arrange for repair or replacement without waiting for settlement.

2–5 PREPARATION FOR USE

WARNING

To avoid hazardous electrical shock, do not perform electrical tests when there are signs of shipping damage to any portion of the outer enclosure (covers, panels, meters).

2–6 Power Requirements

2–7 The instrument requires a power source of 100/120/220 or 240 Vrms (+5 % – 10 %) at a frequency of 48–440 Hz single phase. The maximum power consumption is 70 VA.

2–8 ⚠ Line Voltage Selection

CAUTION

BEFORE SWITCHING ON THIS INSTRUMENT make sure that the instrument is set to the local line voltage. The line voltage selector switches an be seen through the lefthand side of the instrument cover to the rear. The correct setting for the country of destination will have been made at the factory. The instrument power fuse is located behind a metal plate which can also be seen when the switches are viewed. To access the fuse and line selector switches, first DISCONNECT the power cord, then remove instrument top cover by releasing the captive securing screw at rear and sliding cover off. The fuse is accessed by removing the metal cover plate held by two securing screws (non-captive).

CAUTION

Do no change the LINE SELECTOR switch settings with the instrument on or with power connected to the rear panel.

2–9 Figure 2–1 provides information for line voltage and fuse selection:

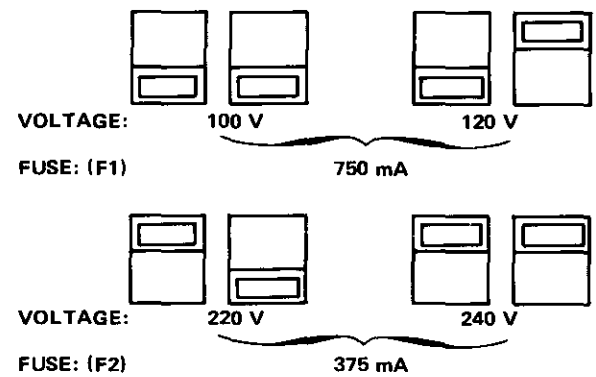

Figure 2–1. Sliding Switches Positions for different Line Voltages

2–10 Power Cable

WARNING

To avoid the possibility of injury or death, the following precautions must be followed before the instrument is switched on:

a. If this instrument is to be energized via an autotransformer for voltage reduction, make sure that the common terminal is connected to the grounded pole of the power source.

b. The power cable plug shall only be inserted into a socket outlet provided with a protective ground contact. The protective action must not be negated by the use of an extension cord without a protective conductor.

c. Before switching on the instrument, the protective ground terminal of the instrument must be connected to a protective conductor of the power cable. This is verified by checking that the resistance between the instrument chassis and the front panel and the ground pin of the power cable plug is zero ohms.

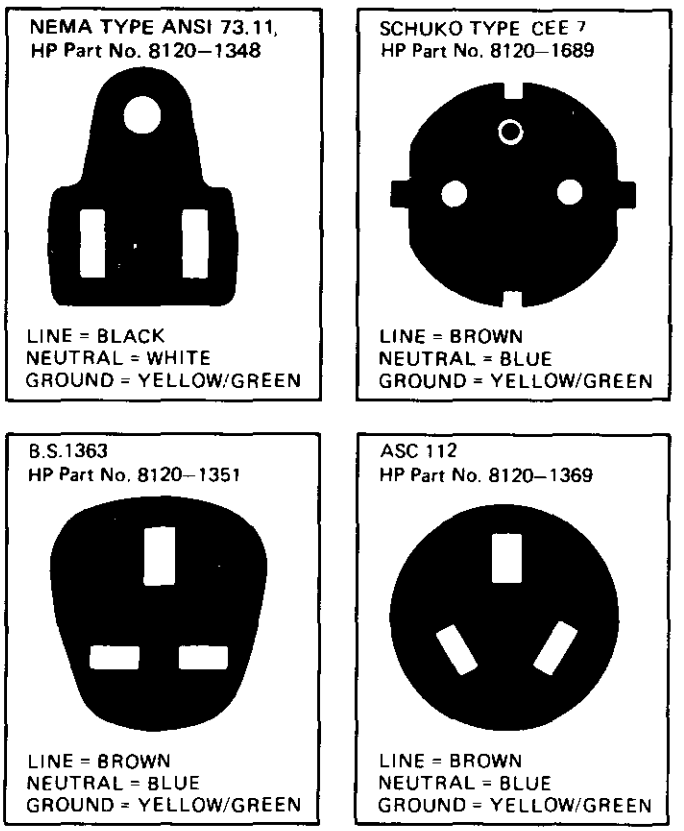

Figure 2–2. Power Cables Available: Plug Identification

2–11 In accordance with international safety standards, this instrument is equipped with a three-wire power cable. When connected to an appropriate ac power receptacle, this cable grounds the instrument cabinet. The type of power cable shipped with each instrument depends on the country of destination. Refer to Figure 2–2 for the part number of the power cords available.

2–12 The following work should be carried out by a qualified electrician and all local electrical codes must be observed. If the plug on the cable supplied does not fit your power outlet, or if the cable is to be attached to a terminal block, then cut the cable at the plug end and re-wire it. The colour coding used in the cable will depend on the cable supplied (see Figure 2–2). If a new plug is to be connected, the plug should meet local safety requirements and include the following features:

adequate load-carrying capacity (see table of specifications in Section 1)

ground connection

cable clamp

2–13 Operating Environment

The operating temperature limits are 0°C to 55°C. The specifications also apply over this temperature range.

2–14 CLAIMS AND REPACKAGING

2–15 Claims for Damage

2–16 If physical damage is evident or if the instrument does not meet specification when received, notify the carrier and the nearest Hewlett-Packard Sales/Service Office. The Sales/Service Office will arrange for repair or replacement of the unit without waiting for settlement of the claim against the carrier.

2–17 Storage and Shipment

2–18 The instrument can be stored or shipped at temperatures between –40°C and 75°C. The instrument should be protected from temperature extremes which cause condensation within it.

2–19 If the instrument is to be shipped to a Hewlett-Packard Sales/Service Office, attach a tag showing owner, return address, model number and full serial number and the type of service required. The original shipping carton

and packaging material may be re-usable but the Hewlett-Packard Sales/Service Office will also provide information and recommendations on materials to be used if the original packing is not available or re-usable. General instructions for re-packing are as follows:

1. Wrap instrument in heavy paper or plastic.

2. Use strong shipping container. A double wall carton made of 200-pound test material is adequate.

3. Use enough shock-absorbing material (3 to 4-inch layer) around all sides of instrument to provide firm cushion and prevent movement inside container. Protect control panel with cardboard.

4. Seal shipping container securely.

5. Mark shipping container FRAGILE to encourage careful handling.

6. In any correspondance, refer to instrument by model number and serial number.

8111A PULSE/FUNCTION GENERATOR

Controls and Connectors (Option 001 fitted)

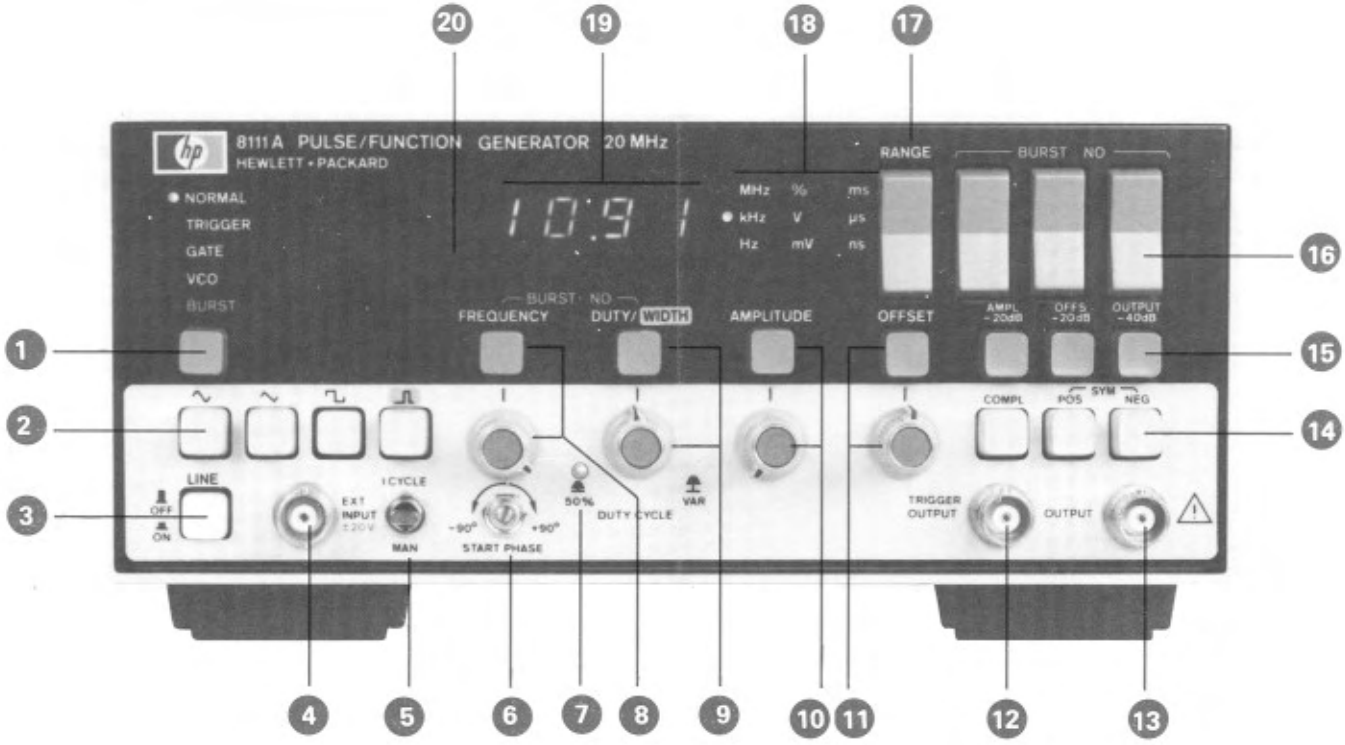

1 The pushbutton on the left-hand side of the front panel selects the operation mode. The selected mode is indicated by an LED. Each successive operation of the pushbutton changes the mode, starting from NORMAL, running through to BURST and back to NORMAL.

The operating modes are:

NORMAL – 8111A's internal rate generator free running

TRIGGER – trigger signal, either via EXT INPUT or toggle switch 5 initiates one output cycle

GATE – gate signal, either via EXT INPUT or toggle switch 5 initiates an output which is maintained as long as gate signal is present

VCO – signal applied to EXT INPUT determines the output frequency

BURST – (Option 001 only) a burst trigger either via the EXT INPUT or toggle switch initiates burst of output cycles

Figure 3–1. Controls and Connectors

2 Function pushbuttons select one of 4 possible functions: sine, triangle, square or pulse.

3 LINE ON/OFF. Primary ac power switch.

4 EXT INPUT. Connector for external signal in TRIGGER, GATE, VCO and BURST (Option 001 only) modes.

5 1 CYCLE/MANUAL switch produces a single trigger pulse when switched to MAN in the TRIGGER, GATE and BURST modes or, initiates a single cycle when switched to 1 CYCLE.

6 START PHASE. Vernier control enables variation of output signal start phase with respect to external trigger, gate or burst signal.

7 50 % DUTY CYCLE indicator, either automatically selected when frequency in MHz range or manually by pushing DUTY CYCLE vernier in. Inoperative in pulse mode.

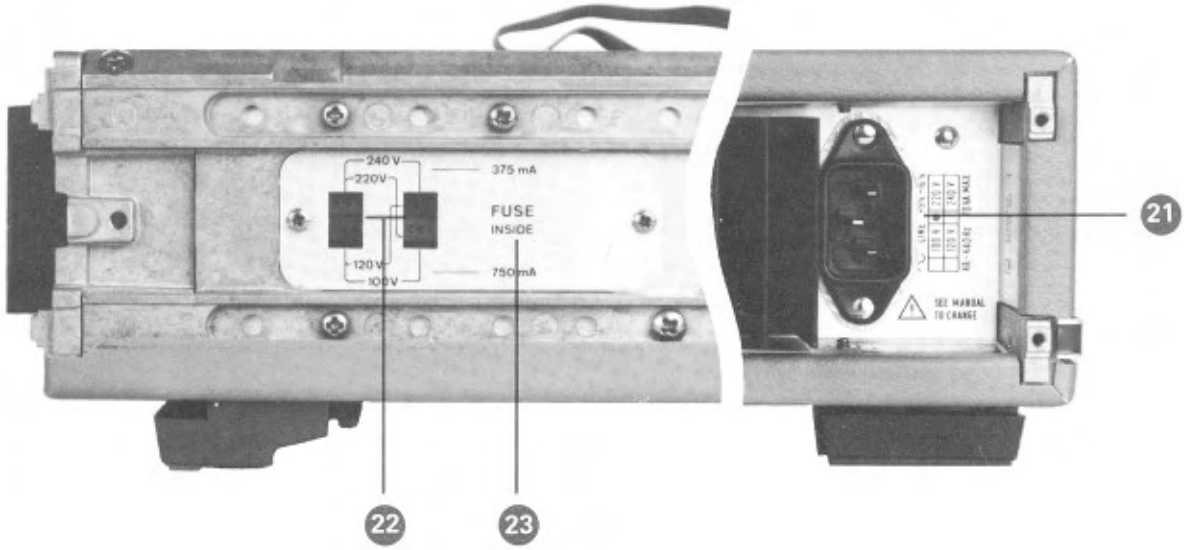

8 9 10 & 11 Parameter select pushbuttons and corresponding vernier controls which enable display and variation of the required parameter. In BURST mode, both the FREQUENCY and DUTY/WIDTH buttons must be pushed in. In sine, triangle and squarewave modes, the DUTY/WIDTH button and associated vernier (when pulled out) enable duty cycle variation (vernier pushed in and LED on for 50 % duty cycle). In pulse mode, they enable pulse width variation.

12 TRIGGER OUTPUT. BNC connector providing a TTL compatible output signal.

13 OUTPUT. BNC connector providing signal output (50 ohm source impedance.

14 Output mode pushbuttons select POSitive or NEGative polarity, SYMmetrical (both buttons pushed or released) and normal or COMPLement output signal.

15 Amplitude and Offset attenuation controls. Pushbuttons select AMPlitude −20 dB, OFFset −20 dB and OUTPUT −40 dB attenuators.

16 BURST NO. Rocker switches which enable setting up of number of pulses in a burst (Opt. 001).

17 RANGE. Rocker switch enables range change of FREQUENCY or WIDTH parameters.

18 Unit indicator. Indicates unit of currently selected parameter.

19 Display. 3 1/2 digit LED display.

20 ERROR indicator. LED out of limits indicator for incompatible period/width ratio settings or external trigger/8111A frequency setting.

21 Line receptacle. Power Cord to be plugged in here. Chassis ground for operator protection provided through cord.

22 Line voltage select sliding switches to be set to local line voltage.

23 Fuse (under metal plate) protects instrument in case of current overload. 750 mA for 100/120 V operation, 375 mA for 220/240 V operation.

SECTION III
OPERATING INSTRUCTIONS

3–1 INTRODUCTION

3–2 The following sections describe the various operating modes and operation of the front panel controls. Pushbutton and/or vernier adjustment is described only where a more detailed description than that accompanying Figure 3–1 is considered necessary.

Numbers within circles – 1 – in text are for cross-reference to Figure 3–1.

⚠ 3–3 SPECIAL OPERATING CONSIDERATIONS

3–4 Read the following sections (a, b, c & d) before applying power to the 8111A.

a. Read the safety summary (red page) at the front of this manual.

b. Ensure that the power selector switches are set properly for the power source being used to avoid instrument damage.

CAUTION

Do not change the LINE SELECTOR switch settings with the instrument on or with power connected to the rear panel.

c. Ensure load is not overdriven (up to 16 Vpp into 50 Ohm or 32 Vpp into high impedance).

d. Do not apply external voltage to the output connectors.

3–5 OPERATING INSTRUCTIONS

3–6 Mode Selection 1

3–7 NORMAL Mode

3–8 In normal mode, (automatically selected on instrument switch-on), the internal rate generator is free running, the frequency being determined by the FREQUENCY setting and the output is continuous (Figure 3–2).

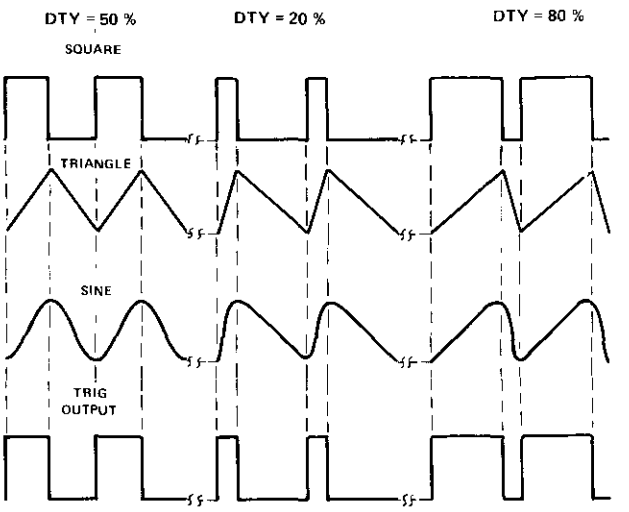

Figure 3–2. Normal Mode–various DUTY CYCLE values

3–9 TRIGGER/GATE/BURST Input Modes 1

3–10 In all three modes you can generate the trigger/gate signal either by applying an external signal to the EXT INPUT BNC connector or by switching the MAN/1 CYCLE switch to MAN. The external trigger signal frequency should not exceed the 8111A's frequency setting. If it does, the ERROR indicator will flash.

NOTE: For all three triggered modes see § 3–30 (first trigger output signal pulse width)

3–11 External Trigger Mode (TRIGGER) 1

3–12 In this mode the trigger signal initiates one complete output cycle (Figure 3–3).

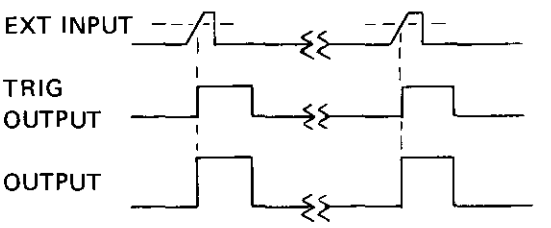

Figure 3–3. Trigger Mode (Squarewave, 50 % DUTY CYCLE)

3–13 Gate Mode (GATE) ❶

3–14 In gate mode the leading edge of the gate signal enables the 8111A's rate generator and the trailing edge disables it (Figure 3–4). The first and last cycles are always complete.

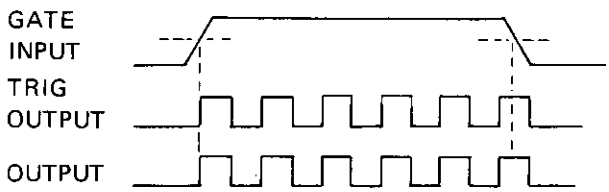

Figure 3–4. Gate Mode (Squarewave, 50 % DUTY CYCLE)

3–15 Burst Mode (BURST) ❶

3–16 In burst mode, a preset number of cycles is generated on each leading edge of a positive-going trigger signal applied to EXT INPUT when BURST mode is selected (Figure 3–5). The burst length may be set from 1 to 1999 pulses by pressing both the FREQUENCY and DUTY/WIDTH pushbuttons and operating the BURST NO rocker switches as necessary, (single digit increment by individual pushes or continuous by constant pressure) until the required burst number is displayed.

Frequency and duty cycle/pulse width selection in BURST mode is as described in 3–21—3–25.

NOTE: At the end of a triggered burst length, single pulses can be added by operation of the 1 CYCLE/MAN switch in the 1 CYCLE mode.

See §3–30 for Start Phase variation details if applicable.

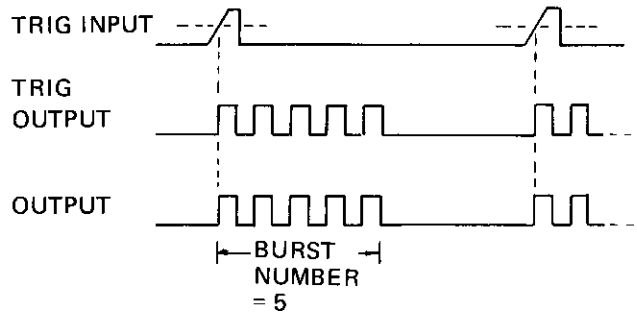

Figure 3–5. Burst Mode (Squarewave, 50 % DUTY CYCLE)

3–17 Voltage-controlled Oscillator Mode (VCO)

3–18 In VCO mode, a signal applied to the EXT INPUT connector determines the output frequency. The working range of input voltage (0.1 V to 10 V or 0.1 V to 2 V for 1.0 to 20 MHz range) sweeps the output frequency linearly over a maximum range of 2 decades. The actual range swept depends, as shown in Table 3–2, on the 8111A's frequency setting. The applied signal may change at up to 1 kHz. An example of the VCO mode is given in Table 3–1:

8111A Frequency range setting: 100 kHz – 1000 kHz

NOTE: Frequency range setting is easier to make in NORMAL mode than VCO mode.

Table 3–1. VCO Mode Example Values

EXT INPUT VOLTAGE	OUTPUT FREQUENCY
0.1 V	10 kHz
1.0 V	100 kHz
10.0 V	1000 kHz

Table 3–2 shows the relationship between external control voltage and output frequency for all ranges.

Table 3–2. Sweepable Bands in VCO Mode

8111A FREQUENCY range setting	Sweepable band			
	From		To	
	V_{in} min	f_{out} min	V_{in} max	f_{out} max
1 Hz – 10 Hz	0.1 V	0.1 Hz	10 V	10 Hz
10 Hz – 100 Hz	0.1 V	1 Hz	10 V	100 Hz
100 Hz – 1000 Hz	0.1 V	10 Hz	10 V	1000 Hz
1 kHz – 10 kHz	0.1 V	0.1 kHz	10 V	10 kHz
10 kHz – 100 kHz	0.1 V	1 kHz	10 V	100 kHz
100 kHz – 1000 kHz	0.1 V	10 kHz	10 V	1000 kHz
1 MHz – 10 MHz	0.1 V	0.1 MHz	10 V	1 MHz
10 MHz – 20 MHz	0.1 V	1 MHz	2 V	20 MHz

3–19 Function, FREQUENCY and DUTY cycle/ WIDTH Selection 2 8 & 9

NOTE: Adjustment of any of the four vernier controls can be made without the corresponding display enable pushbutton being pressed. This allows a waveform which is displayed on an oscilloscope to be quickly and easily varied merely by vernier adjustment at any time.

3–20 Selection of the required function (sine, triangle, square wave or pulse) is by pressing the appropriately labelled front panel pushbutton.

3–21 FREQUENCY display and adjustment 8

NOTE: Frequency controls are non-functional in pulse mode.

3–22 This is enabled by pressing the FREQUENCY pushbutton. Adjustment of the FREQUENCY vernier will change the displayed value, range changing is accomplished by operating the RANGE rocker switch to change either the decimal point position and/or the frequency unit.

NOTE: Selection of a MHz range will cause the 50 % DUTY CYCLE LED to illuminate when sine, triangle or square wave function selected.

3–23 DUTY CYCLE display and adjustment 9

3–24 This is enabled by pressing the DUTY/WIDTH pushbutton. Duty cycle for sine, triangle or square-wave functions can be either a fixed 50 % over the frequency range 1 Hz to 20 MHz, or 10 % to 90 % variable over 1 Hz to 999 kHz. When the DUTY CYCLE vernier is in the "pushed in" position a constant 50 % duty cycle is obtained (indicated by the 50 % LED). By pulling the vernier out, adjustment of the duty cycle within the limits detailed above is possible.

3–25 WIDTH display and adjustment 9

3–26 This is made (in pulse mode) by first pressing the DUTY/WIDTH pushbutton to display the width value and then adjusting the DUTY/CYCLE/width vernier (now functioning as a width vernier). Variation from 25 ns to 100 ms is possible (see Specification) by vernier adjustment and RANGE rocker switch operation.

3–27 ERROR Signal 20

3–28 In pulse mode, the flashing ERROR signal can be caused by either adjustment of the FREQUENCY or DUTY CYCLE/width verniers or RANGE changing, which results in the FREQUENCY/WIDTH settings being incompatible – width of pulse exceeds period (WIDTH $\geqslant$ 1/FREQUENCY).

3–29 In TRIGGER mode, the ERROR signal will occur if the external trigger frequency is incompatible with the 8111A pulse width setting (internal rate generator disabled in pulse mode) or, if it exceeds the 8111A frequency setting in function mode.

3–30 START PHASE Variation 6

3–31 In sine and triangular functions, the waveform start phase can be varied (with respect to an external trigger, gate or burst signal) by +90° to –90° by the appropriate front panel vernier. (Haversine and Haver-triangle waveforms can be generated).

NOTE: See Specification for usable range details. (At +90° first trigger output signal pulse width is reduced to minimum at high frequencies, this may affect Burst mode)

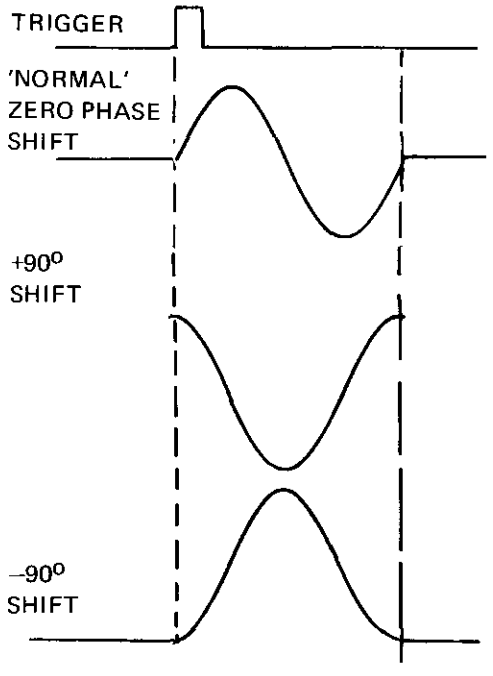

Figure 3–6. Start Phase Variation (Sinewave)

3–32 AMPLITUDE and OFFSET display and adjustment 10 & 11

3–33 Amplitude and offset values are displayed by pressing the AMPLITUDE or OFFSET pushbuttons. To vary either value, adjust the corresponding vernier until the desired figure is displayed. Range changing of either AMPLITUDE or OFFSET is made by pressing one of the three attenuator control pushbuttons as detailed in the following section (the RANGE rocker switch has no control over voltage ranges). Ensure that the maximum amplitude and offset settings do not result in the output signal exceeding the output window levels of ± 8.00 V into 50 Ohm.

3–34 AMPLITUDE, OFFSET and OUTPUT Attenuation 15

3–35 The three pushbutton controlled attenuators (AMPL–20 dB, OFFS–20 dB and OUTPUT–40 dB) can be enabled individually , or if necessary together. The two –20 dB attenuators attenuate either amplitude or offset and the –40 dB one attenuates both, so providing a maximum value of 60 dB attenuation for amplitude and offset.

3–36 OUTPUT MODE Selection 14

3–37 Three output mode pushbuttons enables normal/COMPLementary, Positive/negative or SYMmetrical output waveforms. If none of the buttons are pressed a normal symmetrical waveform will be output.

Examples of output mode differences are shown in Figure 3–7.

NOTE: Positive or negative offset can be added (or subtracted) irrespective of the selected output mode.

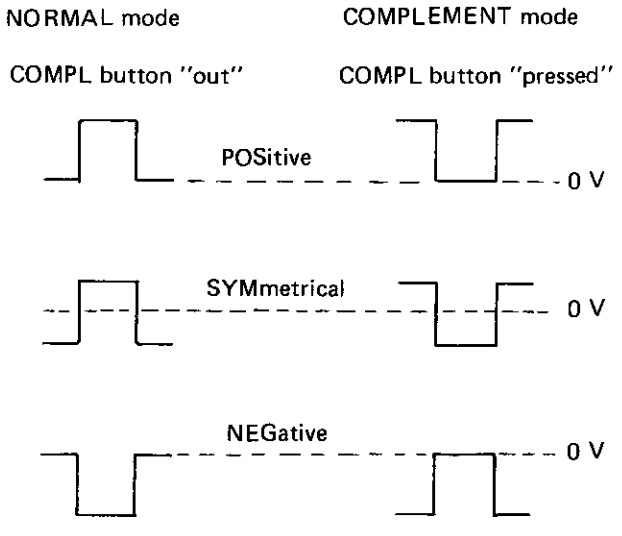

Figure 3–7. Output Mode Differences (no offset applied) (Squarewave, 50 % DUTY CYCLE)

SECTION IV
PERFORMANCE TESTS

4–1 INTRODUCTION

4–2 The procedures in this section test the electrical performance of the instrument using the specifications of Table 1–2 as performance standards. All tests can be performed without access to the interior of the instrument.

4–3 EQUIPMENT REQUIRED

4–4 Equipment required for the performance tests is listed in Table 1–1, Recommended Test Equipment. Any equipment that satisfies the critical specifications given in the table may be substituted for the recommended model(s).

4–5 TEST RECORD

4–6 Results of the performance tests may be tabulated on the Test Record at the end of the test procedures. The Test Record lists all of the tested specifications and their acceptable limits. Test results recorded at incoming inspection can be used for comparison in periodic maintenance, troubleshooting, and after repairs or adjustments.

4–7 PERFORMANCE TESTS

4–8 The performance tests given in this section are suitable for incoming inspection, troubleshooting, or preventive maintenance. During any performance test, all shields and connecting hardware must be in place. The tests are designed to verify the published instrument specifications, perform the tests in the order given and record the data on the Test Record at the end of the test procedures.

4–9 Each test is arranged so that the specification is written as it appears in Table 1–2. Next, when necessary, a description of the test and any special instructions or problem areas are included. Each test that requires test equipment has a setup drawing and a list of the required equipment. The initial steps of each procedure give control settings required for that particular test.

PERFORMANCE TESTS

4–10 FREQUENCY

SPECIFICATION

1.00 Hz – 10 Hz accuracy ± 10 % of setting
10 Hz – 20 MHz accuracy ± 5 % of setting

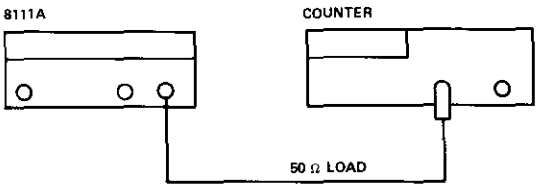

Figure 4–1. Frequency Test Set-up

EQUIPMENT

Counter
Cable Assembly BNC
Feedthrough Termination 50 Ω

PROCEDURE

1. Connect equipment as shown.

2. Set 8111A as follows:

INPUT MODE	NORM
FUNCTION	SQUARE
DUTY CYCLE	50 %
AMPLITUDE	CW
AMPLITUDE ATTENUATION	–20 dB
OFFSET	0 V
OUTPUT MODE	SYM

3. Set counter to frequency measurement.

PERFORMANCE TESTS

4. Set 8111A frequency and verify counter frequency reading as follows:

Table 4–1. Frequency Limits

8111A SETTING	COUNTER READING
1 Hz	0.900 Hz – 1.100 Hz
9.99 Hz	9.000 Hz – 11.000 Hz
10 Hz	9.500 Hz – 10.500 Hz
99.9 Hz	95.000 Hz – 105.00 Hz
100 Hz	95.00 Hz – 105.00 Hz
999 Hz	950.00 Hz – 1050.0 Hz
1 kHz	0.950 kHz – 1.050 kHz
9.99 kHz	9.500 kHz - 10.50 kHz
10 kHz	9.500 kHz - 10.50 kHz
99.9 kHz	95.00 kHz – 105.00 kHz
100 kHz	95.00 kHz – 105.00 kHz
999 kHz	950.0 kHz - 1050 kHz
1 MHz	0.950 MHz – 1.050 MHz
9.99 MHz	9.500 MHz – 10.50 MHz
10 MHz	9.500 MHz – 10.50 MHz
20 MHz	19.00 MHz – 21.00 MHz

PERFORMANCE TESTS

4–11 AMPLITUDE AND ATTENUATION

SPECIFICATION

Amp. Range 1.6 mV to 16 Vpp (into 50 Ω) accuracy ± 5 % (1 kHz).

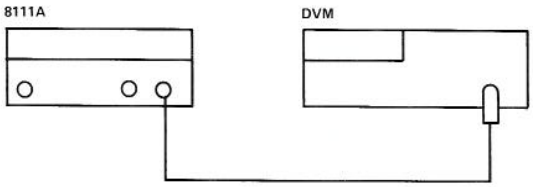

Figure 4–2. Amplitude and Attenuation Test Set-up

EQUIPMENT

DVM
Cable Assembly BNC
Feedthrough Termination 50 Ω

PROCEDURE

1. Connect equipment as shown.

2. Set 8111A as follows:

INPUT MODE	NORM
FUNCTION	SQUARE
DUTY CYCLE	50 %
AMPLITUDE	16 V
OFFSET	0 V
OUTPUT MODE	SYM
FREQUENCY	1 kHz

3. Set DVM to AC measurement (RMS).

4. Set 8111A amplitude and verify DVM amplitude reading as follows:

8111A	DVM READING
SQUARE 16 Vpp	7.600 V – 8.40 V
SQUARE 10 Vpp	4.750 V – 5.25 V
SQUARE 1.6 Vpp	0.760 V – 0.84 V
TRIANGLE 16 Vpp	4.388 V – 4.85 V
TRIANGLE 10 Vpp	2.742 V – 3.031 V
TRIANGLE 1.6 Vpp	0.439 V – 0.485 V
SINE 16 Vpp	5.374 V – 5.940 V
SINE 10 Vpp	3.359 V – 3.712 V
SINE 1.6 Vpp	0.537 V – 0.594 V

5. Set 8111A Ampl. to 10 Vpp (Square) and verify DVM amplitude reading when attenuation increased as follows:

8111A	DVM READING
10 Vpp	4.750 V – 5.250 V
–20 dB (1 Vpp)	0.475 V – 0.525 V
–40 dB (100 mVpp)	47.5 mV – 52.5 mV
–60 dB (10 mVpp)	4.75 mV – 5.25 mV

PERFORMANCE TESTS

4–12 OFFSET

SPECIFICATION

Offset Range 0 V to ± 8 V (into 50 Ω) accuracy ± 5 % of setting and ± 2 % of amplitude and ± 20 mV

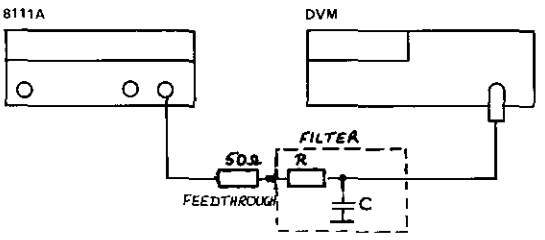

Figure 4–3. Offset Test Set-up

EQUIPMENT

DVM
Cable assembly BNC
Feedthrough Termination 50 Ω
Filter (suggested values: R = 20 kΩ, C = 2.2 μF) NOTE: Cut off frequency of the filter should be < 10 Hz

PROCEDURE

1. Connect equipment as shown.

2. Set 8111A as follows:

INPUT MODE	NORM
FUNCTION	SQUARE
DUTY CYCLE	50 %
AMPLITUDE	2 V
OUTPUT MODE	SYM
FREQUENCY	1 kHz
AMPLITUDE ATTENUATION	–20 dB

3. Set 3455A to DC measurement.

4. Set 8111A Offset and verify DVM offset reading as follows:

8111A	DVM READING
8 V	7.576 V – 8.424 V
4 V	3.776 V – 4.224 V
2 V	1.876 V – 2.124 V
0 V	–24 mV 24 mV
–2 V	–1.876 V – –2.124 V
–4 V	–3.776 V – –4.224 V
–8 V	–7.576 V – –8.424 V

PERFORMANCE TESTS

4–13 PULSE CHARACTERISTICS

SPECIFICATION

Transition times (10 % to 90 %): < 10 nsec
Preshoot, Overshoot, Ringing: ± 5 % of amplitude (≥ 0.16 Vpp)
± 10 % of amplitude (< 0.16 Vpp)

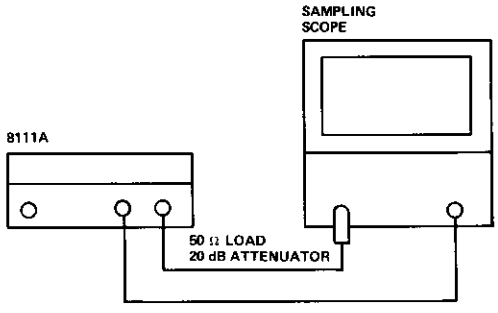

Figure 4–4. Pulse Characteristics Test Set-up

EQUIPMENT

Sampling oscilloscope
Cable assembly 2 x BNC
Feedthrough termination 50 Ω
Attenuator 20 dB

PROCEDURE

1. Connect the equipment as shown.

2. Set 8111A as follows:

INPUT MODE	NORM
FUNCTION	SQUARE
DUTY CYCLE	50 %
AMPLITUDE	16 Vpp
OUTPUT MODE	SYM
FREQUENCY	2 MHz

3. Set scope so that one cycle fills the display.

leading edge	≤ 10 nsec
trailing edge	≤ 10 nsec
pulse perturbation	≤ ± 5 % of amplitude

PERFORMANCE TESTS

4–14 SINE CHARACTERISTIC

SPECIFICATION

Sine (normal mode, 50 % duty cycle, sym)

THD $\left\{ \begin{array}{l} < 1\ \%\ [\ -40\ \text{dB}\ ],\ (10\ \text{Hz} - 99.9\ \text{kHz}) \\ < 3\ \%\ [\ -30\ \text{dB}\ ],\ (100\ \text{kHz} - 999\ \text{kHz}) \end{array} \right\}$ may increase by 3dB below 10° C and above 45° C.

for > 1 MHz to 20 MHz harmonic signals more than 26 dB below fundamental.

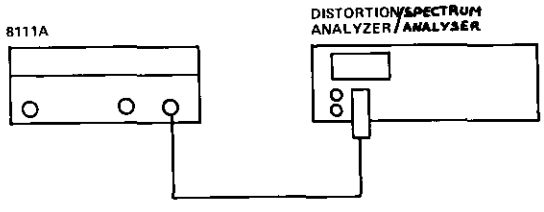

Figure 4–5. Sine Characteristics Test Set-up

EQUIPMENT

Distortion analyser/Spectrum Analyser
Cable assembly BNC to Banana
Feedthrough termination 50 Ω

PROCEDURE

1. Connect the equipment as shown.

2. Set 8111A as follows:

INPUT MODE	NORM
FUNCTION	SINE
DUTY CYCLE	50 %
AMPLITUDE	16 V
FREQUENCY	9.99 kHz
OUTPUT MODE	SYM
OFFSET	0 V

3. Either, set the distortion analyser front panel controls as required (Distortion, Range–dB/%, input range etc.) or, if using a spectrum analyser, tune it for minimum display amplitude and adjust gain so that fundamental corresponds to 0 dB. Verify that the 2nd and 3rd harmonics do not exceed the –42 and –47 dB levels respectively.

4. Verify that THD < 1 %

$$\text{THD} = \frac{\sqrt{E_1^2 + E_2^2 + E_3^2 + \ldots\ldots\ldots}}{E_0} \cdot 100\ \%$$

where E_0 = fundamental voltage amplitude and E_1, E_2 etc are the 2nd, 3rd etc. harmonic amplitudes.

When the harmonics are expressed in dB the formula becomes:

$$\text{THD} = \sqrt{10^{\frac{A_1}{10}} + 10^{\frac{A_2}{10}} + 10^{\frac{A_3}{10}} + \ldots\ldots\ldots} \cdot 100\ \%$$

where A_1 = first harmonic in dB etc.

5. Change 8111A frequency setting to 500 kHz.

6. Verify that 2nd and 3rd harmonics do not exceed the –32 dB and –37 dB levels.

7. Verify that THD < 3 % using previously stated formula.

8. Change 8111A frequency setting to 20 MHz.

9. Verify that all harmonics are less than –26 dB.

PERFORMANCE TESTS

4–15 DUTY CYCLE

SPECIFICATION

Variable range: 10 % to 90 % (1 Hz to 999 kHz)
50 % fixed (1 Hz to 20 MHz)

Accuracy: ± 1 digit, 50 % fixed
± 3 digit, 20 % to 80 %
± 6 digit, 10 % to 20 % and 80 % to 90 %

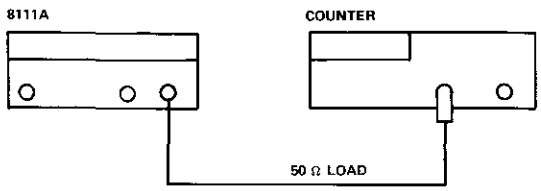

Figure 4–6. Duty Cycle Test Set-up

EQUIPMENT

Counter
Cable assembly BNC
Feedthrough termination 50 Ω

PROCEDURE

1. Connect the equipment as shown.

2. Set 8111A as follows:

INPUT MODE	NORM
FUNCTION	SQUARE
AMPLITUDE	16 Vpp
AMPLITUDE ATTENUATION	–20 DB
FREQUENCY	10.000 kHz
VAR DUTY CYCLE	50 %

3. Set counter to TI avg, Slope A+, Slope B– measurement.

4. Set 8111A Duty cycle and verify counter duty cycle reading as follows:

8111A	COUNTER READING
10 %	4 μsec – 16 μsec
20 %	17 μsec – 23 μsec
50 %	49 μsec – 51 μsec
80 %	77 μsec – 83 μsec
90 %	84 μsec – 96 μsec

PERFORMANCE TESTS

4–16 WIDTH

SPECIFICATION

Range: 25 nsec to 100 msec
Accuracy: ± 5 % of setting ± 2 nsec

1.

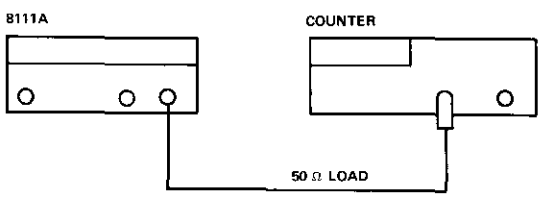

2.

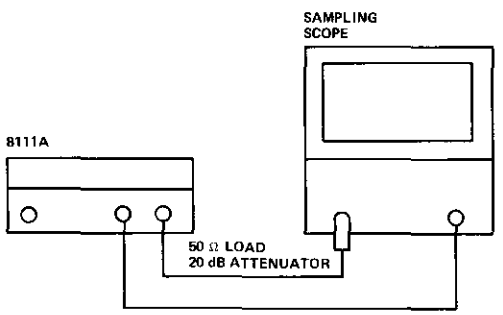

Figure 4–7. Width Test Set-up

EQUIPMENT

Counter
Sampling scope
Cable assembly 2 x BNC
Attenuator 20 dB
Feedthrough termination 50 Ω

PROCEDURE

1. Connect the equipment as shown in Figure 4–7–1.

2. Set 8111A as follows:

INPUT MODE	NORM
FUNCTION	PULSE
WIDTH	as required
AMPLITUDE	16 Vpp
OUTPUT MODE	SYM

PERFORMANCE TESTS

3. Set Counter to T.1. avg, Slope A+, Slope B− measurement.

4. Set 8111A Width and verify counter T.1 reading as follows:

8111A		COUNTER READING
5 kHz	100 nsec	93 nsec − 107 nsec
	999 nsec	948 nsec − 1051 nsec
5 kHz	1 μsec	0.948 μsec − 1.052 μsec
	9.99 μsec	9.498 μsec − 10.5 μsec
5 kHz	10 μsec	9.50 μsec − 10.5 μsec
	99.9 μsec	94.99 μsec − 104.9 μsec
500 Hz	100 μsec	95 μsec − 105 μsec
	999 μsec	949.9 μsec − 1049 μsec
50 Hz	1 msec	0.95 msec − 1.05 msec
	9.99 msec	9.499 msec − 10.49 msec
5 Hz	10 msec	9.5 msec − 10.5 msec
	99.9 msec	94.9 msec − 104.9 msec

5. Connect the equipment as shown in Figure 4−7−2.

6. Set 8111A as follow:

INPUT MODE	NORM
FUNCTION	PULSE
WIDTH	as required
AMPLITUDE	16 Vpp
OUTPUT MODE	SYM
FREQUENCY	1 MHz

7. Set scope so that one cycle fills the display.

8. Set 8111A Width and verify sampling scope width reading as follows:

8111A	SAMPLING SCOPE
25 nsec	21.75 nsec − 28.25 nsec
100 nsec	93 nsec − 107 nsec

PERFORMANCE TESTS

4–17 TRIGGER, GATE, BURST

SPECIFICATION

Each input cycle generates a single output cycle.

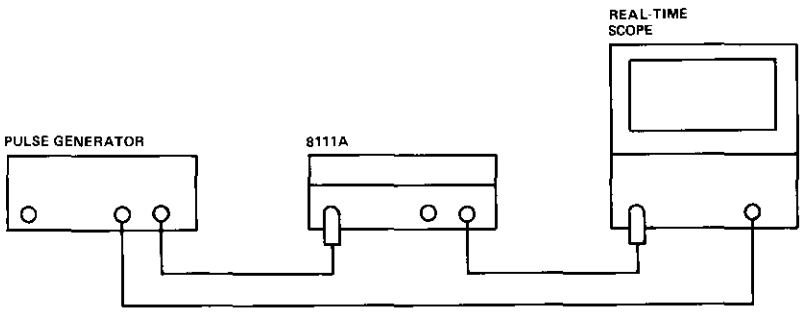

Figure 4–8. Trigger, Gate and Burst Test Set-up

EQUIPMENT

Pulse generator
Realtime scope
Cable assembly 3 x BNC
2 x Feedthrough termination 50 Ω

PROCEDURE (Trigger)

1. Connect the equipment as shown.

2. Set 8111A as follows:

INPUT MODE	TRIGGER
FUNCTION	SINE
DUTY CYCLE	50 %
AMPLITUDE	16 Vpp
OUTPUT MODE	SYM
FREQUENCY	10 kHz

3. Set pulse generator to 1 kHz and 100 nsec width.

4. Check on scope for 8111A output signals.

PERFORMANCE TESTS

PROCEDURE (Gate)

1. Connect the equipment as shown.

2. Set 8111A as follows:

INPUT MODE	GATE
FUNCTION	SINE
DUTY CYCLE	50 %
AMPLITUDE	16 Vpp
OUTPUT MODE	SYM
FREQUENCY	10 kHz

3. Set pulse generator to 1.0 kHz and 500 μsec width.

4. Check on scope for 8111A output signals.

PROCEDURE (Burst)

1. Connect the equipment as shown.

2. Set 8111A as follows:

INPUT MODE	BURST
FUNCTION	SINE
DUTY CYCLE	50 %
AMPLITUDE	16 Vpp
OUTPUT MODE	SYM
FREQUENCY	10 kHz
BURST	3

3. Set pulse generator to 1 kHz and 100 nsec width.

4. Check on scope for 8111A output signals.

PERFORMANCE TESTS

4–18 VCO-MODE

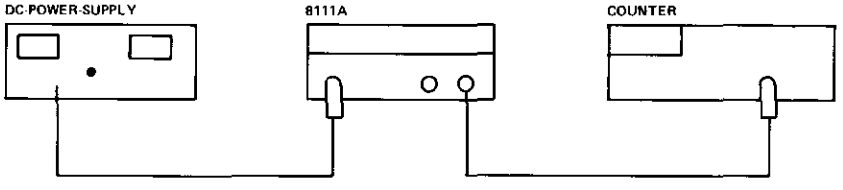

Figure 4–9. VCO-Mode Test Set-up

EQUIPMENT

DC Power Supply
Counter
Cable assembly BNC and BNC-Banana
2 x Feedthrough termination 50 Ω

PROCEDURE

1. Connect the equipment as shown.

2. Set 8111A as follows:

INPUT MODE	VCO
FUNCTION	SQUARE
DUTY CYCLE	50 %
AMPLITUDE	16 Vpp
OUTPUT MODE	SYM
FREQUENCY RANGE	1–10 kHz

3. Set counter to frequency.

4. Set DC Supply for .1 to 10 V and verify counter frequency (typical).

DC POWER SUPPLY	8111A	COUNTER
.1 V	.10 kHz	.10 kHz
1 V	1.00 kHz	1.00 kHz
10 V	10.00 kHz	10.00 kHz

PERFORMANCE TESTS RECORD

Hewlett-Packard Company
Model 8111A/8111A Option 001
Pulse/Function Generator

Instrument Serial No. _____
Tested by _____
Date _____

Paragraph No.	Test Description and parameter values	Result		
		Minimum	Actual	Maximum
4–10	Frequency			
	1 Hz	0.900 Hz		1.100 Hz
	9.99 Hz	9.000 Hz		11.000 Hz
	10 Hz	9.500 Hz		10.500 Hz
	99.9 Hz	95.000 Hz		105.00 Hz
	100 Hz	95.00 Hz		105.00 Hz
	999 Hz	950.00 Hz		1050.0 Hz
	1 kHz	0.950 kHz		1.050 kHz
	9.99 kHz	9.950 kHz		10.50 kHz
	10 kHz	9.950 kHz		10.50 kHz
	99.9 kHz	95.00 kHz		105.00 kHz
	100 kHz	95.00 kHz		105.00 kHz
	999 kHz	950.00 kHz		1050.0 kHz
	1 MHz	0.950 MHz		1.050 MHz
	9.99 MHz	9.500 MHz		10.50 MHz
	10 MHz	9.500 MHz		10.50 MHz
	20 MHz	19.00 MHz		21.00 MHz
4–11	Amplitude and Attenuation			
(1)	Amplitude			
	Square			
	16 Vpp	7.600 V		8.40 V
	10 Vpp	4.750 V		5.25 V
	1.6 Vpp	0.760 V		0.84 V
	Triangle			
	16 Vpp	4.388 V		4.85 V
	10 Vpp	2.742 V		3.031 V
	1.6 Vpp	0.439 V		0.485 V
	Sine			
	16 Vpp	5.374 V		5.940 V
	10 Vpp	3.359 V		3.712 V
	1.6 Vpp	0.537 V		0.594 V

PERFORMANCE TESTS RECORD

Paragraph No.	Test Description and parameter values	Result Minimum	Result Actual	Result Maximum
4–11 cont'd	Amplitude and Attenuation			
	Attenuation			
	10 Vpp	4.750 V		5.250 V
	–20 dB (1 Vpp)	0.475 V		0.525 V
	–40 dB (100 mVpp)	47.5 mV		52.5 mV
	–60 dB (10 mVpp)	4.75 mV		5.25 mV
4–12	Offset			
	8 V	7.576 V		8.424 V
	4 V	3.776 V		4.224 V
	2 V	1.876 V		2.124 V
	0 V	–24 mV		24 mV
	–2 V	–1.876 V		–2.124 V
	–4 V	–3.776 V		–4.224 V
	–8 V	–7.576 V		–8.424 V
4–13	Pulse Characteristics			
	leading edge	⩽ 10 nsec	yes ☐	no ☐
	trailing edge	⩽ 10 nsec	yes ☐	no ☐
	pulse pertubation	⩽ ± 5 % of amplitude	yes ☐	no ☐
4–14	Sine Characteristics (Harmonic level)			
	Frequency			
	9.99 kHz (2nd Harmonic)		_____	–42 dB
	9.99 kHz (3rd Harmonic)		_____	–47 dB
	9.99 kHz (THD)		_____ %	< 1 %
	500 kHz (2nd Harmonic)		_____	–32 dB
	500 kHz (3rd Harmonic)		_____	–37 dB
	500 kHz (THD)		_____ %	< 3 %
	20 MHz (worst Harmonic)		_____	–26 dB
4–15	Duty Cycle			
	10 %	4 μs		16 μs
	20 %	17 μs		23 μs
	50 %	49 μs		51 μs
	80 %	77 μs		83 μs
	90 %	84 μs		96 μs

PERFORMANCE TESTS RECORD

Paragraph No.	Test Description and parameter values	Result		
		Minimum	Actual	Maximum
4–16	Width			
	5 kHz 100 ns	93 ns		107 ns
	999 ns	948 ns		1051 ns
	5 kHz 1 μs	0.948 μs		1.052 μs
	9.99 μs	9.498 μs		10.5 μs
	5 kHz 10 μs	9.50 μs		10.5 μs
	99.9 μs	94.99 μs		104.9 μs
	500 Hz 100 μs	95 μs		105 μs
	999 μs	949.9 μs		1049 μs
	50 Hz 1 ms	0.95 ms		1.05 ms
	9.99 ms	9.499 ms		10.49 ms
	5 Hz 10 ms	9.5 ms		10.5 ms
	99.9 ms	94.9 ms		104.9 ms
	25 ns	21.75 ns		28.25 ns
	100 ns	93 ns		107 ns
4–17	Trigger, Gate, Burst			
	Trigger	Output Signals	yes ☐	no ☐
	Gate	Output Signals	yes ☐	no ☐
	Burst	Output Signals	yes ☐	no ☐
4–18	VCO Mode			
	0.1 V	0.10 kHz	yes ☐	no ☐
	1.0 V	1.00 kHz	yes ☐	no ☐
	10 V	10.00 kHz	yes ☐	no ☐

SECTION V
ADJUSTMENT PROCEDURE

5-0 GENERAL

The adjustment procedure is divided into the following sections:

1. Power supply regulator	para. 5-1
2. Pre-adjustment	para. 5-2
3. Voltage Controlled Oscillator	para. 5-3
4. Shaper	para. 5-4
5. Width generator	para. 5-5

If the complete instrument needs to be recalibrated, it is recommended that the adjustments are made in the sequence as listed above.

If only a part of the instrument has to be recalibrated, for example after replacement of a faulty component on a board, the procedure should be started at the appropriate paragraph. Subsequent sections must be checked through and adjustments made if necessary. Checking and/or adjustment of values in previous sections is necessary only in the case of the Shaper board since it requires inputs from the VCO which might need to be adjusted for correct Shaper board calibration after repair or replacement.

NOTE the following points:

Allow the instrument a 15 minute warm-up time with closed cover. Keep cover closed between adjustments.

An adjustment points location diagram (Figure 5-4) is given at the end of this section.

All measurements are made at the 8111A output except:

- Power Supply output voltages
- Control voltage for VCO
which are made at special testpoints.
All specification of the 8111A apply with 50 Ohms load resistance, so ensure that the 8111A output is terminated with 50 Ohms during amplitude and transistion time measurement.

5-1 POWER SUPPLY REGULATOR ADJUSTMENT

EQUIPMENT:
DVM

PROCEDURE

1. Connect DVM low terminal to ground(⊥)test point on board A2 and measure the output voltages at the other A2 test points.
2. Adjust +5V via A2 R5 for +5V ±10mV (TP+5V)
3. Adjust +15V via A2 R37 for +15V ±10mV (TP+15V)
4. Measure -5.2V. It should be -5.2V ±100mV (TP-5.2V)
   Measure -15V. It should be -15V +/- 750mV (TP-15V)
   Measure -23V. It should be -23V +/- 200mV (TP-23V)
   Measure +23V. It should be +23V +/- 200mV (TP+23V)

5-2 PRE-ADJUSTMENT

EQUIPMENT:
Oscilloscope, 50 Ohm feedthrough.

Waveform pre-adjustments

PROCEDURE

1. Set 8111A:

OPERATING MODE . . . . . NORMAL
WAVEFORM . . . . . square
FREQUENCY RANGE 1-10kHz
FREQUENCY (VERNIER) . . . . . approx. 2kHz
DUTY CYCLE . . . . . fixed 50%
AMPLITUDE (VERNIER) . . . . . .approx. 8V
AMPL ATTENUATOR . . . . . released
OFFSET (VERNIER) 0V
OFFSET ATTENUATOR . . . . . released
OUTPUT ATTENUATOR . . . . . released
OUTPUT MODE . . . . . SYM, NORM

2. Connect 8111A output to Scope. Make sure, that the output is terminated with 50 Ohms.
3. Adjust A6R50 to its mid-position then adjust A6R33 for symmetrical square wave output.
4. Adjust A8 R14 for optimal square wave on scope (minimum distortion).
5. Disconnect Shaper Board A6 from connector. Adjust A8 R55 for OV ±1mV baseline offset.

Amplitude pre-adjustment

6. Reconnect A6.
7. Set 8111A :

AMPLITUDE (VERNIER) ..... CW

8. Adjust A6 R6 for 16V±500mV displayed on scope.
9. Set 8111A:

AMPLITUDE (VERNIER . . . . . .CCW

Adjust A6R23 for symmetrical output.

10. Turn A6 R27 fully CCW then adjust for 1.6V ±100mV.
11. Set 8111A :

AMPLITUDE (VERNIER) ..... CW

12. If the amplitude is not 16V±500mV, repeat steps 8 to 11.
13. Set 8111A :

WAVEFORM ..... Triangle

14. Adjust A5 R10 for 16V+/-500mV.

The amplitude of the triangle should be the same as the amplitude of the square.

5-3 VCO ADJUSTMENT

EQUIPMENT:

Counter, DVM, Fine adjustable Power Supply, Sampling scope, 20dB Attenuator (2W)

PROCEDURE

1. Set 8111A :

OPERATING MODE ..... NORMAL
WAVEFORM ..... square
FREQUENCY RANGE 1-10kHz
FREQUENCY (VERNIER) ..... CW
DUTY CYCLE ..... fixed 50%
AMPLITUDE (VERNIER) ..... CW
AMPL ATTENUATOR ..... -20dB
OFFSET (VERNIER) 0V
OFFSET ATTENUATOR ..... released
OUTPUT ATTENUATOR ..... released
OUTPUT MODE ..... SYM, NORM

Fixed 50% Duty Cycle Adjustment

2. Set Counter: TIME INTERVAL A→B Slope A⎍ Slope B⎍ COM A, Trigger level 0V

If possible use an averaged TI measurement over 100 time intervals.

3. Connect 8111A output to Counter Input A.
4. Note value displayed by counter
5. Set Counter: Slope A⎍ Slope B⎍.
6. Adjust A5 R65 for same value as in 4.) ± 10ns.

NOTE: This adjustment can also be made with the help of a spectrum analyser. For a 50% Duty Cyle the 2nd, 4th,etc.,harmonics must disappear. This simplifies the minimizing of the difference between NORM and COMPL mode.

Frequency Adjustment For Variable Duty Cycle

7. Set Counter to PERIOD A. If possible use an averaged period-measurement over 100 periods.
8. Note value displayed by counter.
9. Set 8111A:

DUTY CYCLE MODE ..... variable
DUTY CYCLE (VERNIER) 40-60%

10. Adjust A5 R50 for same value (as in 8.) ±100 nS.

VCO Linearity adjustment

11. Set 8111A:

OPERATING MODE ..... VCO
WAVEFORM ..... square
FREQUENCY RANGE 1-10kHz
FREQUENCY (VERNIER) ..... CW
DUTY CYCLE ..... fixed 50%
AMPLITUDE (VERNIER) ..... CW
AMPL ATTENUATOR ..... -20dB
OFFSET (VERNIER) 0V
OFFSET ATTENUATOR ..... released
OUTPUT ATTENUATOR ..... released
OUTPUT MODE ..... SYM, NORM

12. Connect DVM between A5 TP3 and TP4. The position of TP3 and TP4 is shown in Figure 5-1.

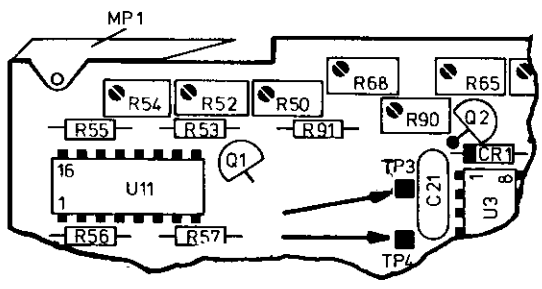

Figure 5–1.

13. Connect 10V DC ±50mV to EXT INPUT.
14. Note voltage between TP3 and TP4, displayed by the DVM
15. Connect 100mV DC ±0.5mV to EXT INPUT.
16. Adjust A5 R90 for 1/100 of value (from 14.) on DVM.
17. Disconnect DVM from TP3/TP4.

Positive Slope Timing Linearity Adjustment

18. Set Counter: TIME INTERVAL A→B Slope A/ Slope B\ COM A, Trigger level OV
19. Adjust A5 R86 for 5000μs. ±20μs.

Negative Slope Timing Linearity Adjustment

20. Set Counter: Slope A\ Slope B/.
21. Adjust A5 R88 for 5000μs ±20μs.
22. Disconnect the external voltage.

Frequency Adjustment (1Hz-1000kHz)

23. Set 8111A:

OPERATING MODE ..... NORMAL
WAVEFORM ..... square
FREQUENCY RANGE 1-10kHz
FREQUENCY (VERNIER) 10.00kHz
DUTY CYCLE ..... fixed 50%
AMPLITUDE (VERNIER) ..... CW
AMPL ATTENUATOR ..... -20dB
OFFSET (VERNIER) 0V
OFFSET ATTENUATOR ..... released
OUTPUT ATTENUATOR ..... released
OUTPUT MODE ..... SYM, NORM

24. Set Counter: FREQENCY A.
Adjust A5 R54 for 10.00 kHz ±0.1kHz

Variable Duty Cycle Display Adjustment

25. Set 8111A:

DUTY CYCLE ..... variable
DUTY CYCLE VERNIER ..... as required

26. Set Counter: TIME INTERVAL A→B, Slope A/ Slope B\ COM A, Trigger level 0V
If possible, use an averaged time interval measurement over at least 10 time intervals.
27. Adjust 8111A DUTY CYCLE VERNIER for 50μs ±0,1μs on counter.
28. Adjust A5 R68 for 50% duty cycle displayed by 8111A.

Overshoot & Transition Time

29. Set 8111A:
OPERATING MODE ..... NORMAL
WAVEFORM ..... square
FREQUENCY RANGE 1-10MHz
FREQUENCY (VERNIER) ..... approx 2MHz
DUTY CYCLE ..... fixed 50%
AMPLITUDE (VERNIER) ..... CW
AMPL ATTENUATOR ..... released
OFFSET (VERNIER) ..... CCW
OFFSET ATTENUATOR ..... released
OUTPUT ATTENUATOR ..... released
OUTPUT MODE ..... POS,NORM

30. Connect 8111A output to sampling scope as shown in Fig. 5-2

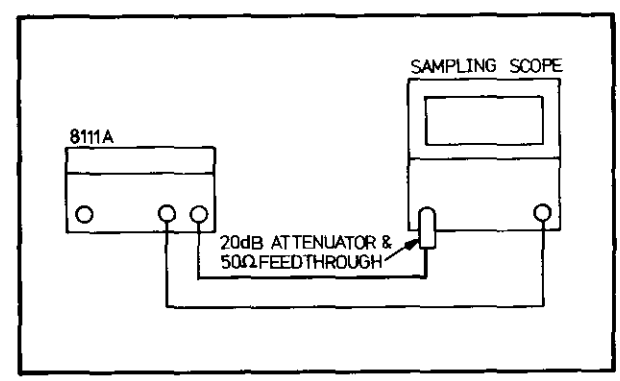

Figure 5–2

31. Adjust A8C14 for overshoot <5%.
32. Set 8111A:

OFFSET (VERNIER) ..... CW
OUTPUT MODE ..... NEG,NORM

33. Check that overshoot <5%.
34. Set 8111A:

AMPLITUDE (VERNIER) ..... CCW
OFFSET (VERNIER) ..... -7.2V
OUTPUT MODE ..... SYM,NORM

35. Check that transition times <10nS.

Flatness

36. Set 8111A:

OPERATING MODE ..... NORMAL
WAVEFORM ..... Triangle
FREQUENCY RANGE 100-1000kHz
FREQUENCY (VERNIER) approx500kHz
DUTY CYCLE ..... fixed 50%
AMPLITUDE (VERNIER) ..... CW
AMPL ATTENUATOR ..... released
OFFSET (VERNIER) 0V
OFFSET ATTENUATOR ..... released
OUTPUT ATTENUATOR ..... released
OUTPUT MODE ..... SYM, NORM

37. Adjust Input Vernier of the Sampling scope for a 100% display of the waveform.

38. Set 8111A:
FREQUENCY RANGE ..... 10-20 MHz
FREQUENCY (VERNIER) ..... CW

39. Adjust A5 R5 for low level -4%.
Adjust A5 R8 for high level -4%.

Frequency Adjustment (10-20MHz)

40. Set 8111A:
FREQUENCY (VERNIER) 20MHz

41. Set Counter: FREQUENCY A.
42. Connect 8111A output to Counter Input A.
43. Adjust A5 C3 for 20 MHz ±0.2MHz.

Frequency Adjustment (1-10 MHz)

44. Set 8111A:
FREQUENCY RANGE 1-10MHz
FREQUENCY (VERNIER) 10.00MHz

45. Adjust A5 R52 for 10MHz ±0.1MHz.
Repeat 30-45 twice.

5-4 SHAPER ADJUSTMENT

EQUIPMENT:
DVM, Lowpass filter as shown in Figure 5-3, Scope, Spectrum analyser (Distortion analyser)

PROCEDURE

Square Amplitude Adjustment

1. Set 8111A:

OPERATING MODE ..... NORMAL
WAVEFORM ..... square
FREQUENCY RANGE 1-10kHz
FREQUENCY (VERNIER) ..... CW
DUTY CYCLE ..... fixed 50%
AMPLITUDE (VERNIER) ..... CW
AMPL ATTENUATOR ..... released
OFFSET (VERNIER) 0V
OFFSET ATTENUATOR ..... released
OUTPUT ATTENUATOR ..... released
OUTPUT MODE ..... SYM, NORM

2. Set DVM to AC, 10V Range.
3. Connect 8111A output to DVM input.
4. Adjust A 6 R24 for maximum amplitude
5. Set 8111A:

AMPLITUDE (VERNIER) 16.00V

Adjust A6R50 to its center position.
6. Adjust A6 R6 for 8V ±400 mV.

Square Normal/Complement Error

7. Set DVM to DC, 10V Range. Use DVM built in filter function, otherwise use set-up as shown in Figure 5-3

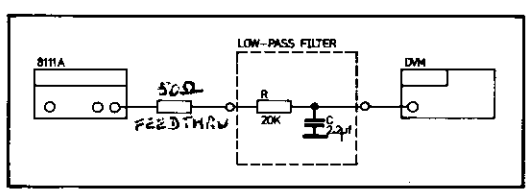

Figure 5-3

8. Change 8111A OUTPUT MODE from NORM to COMPL and back.
9. Check that the difference between NORM and COMPL does not exceed 10mV. If necessary adjust A6 R16 for minimum difference.

Symmetry Adjustment

10. Adjust A6 R33 for OV ±10mV.
11. Set 8111A:

AMPLITUDE VERNIER 1.60V

12. Adjust A6 R23 for OV ±10mV.

Minimum Amplitude Adjustment

13. Set DVM to AC, 10V Range.
14. Adjust A6 R27 for 825mV ±5mV

NOTE: Steps 6 and 14 are interdependent and must therefore be repeated until the values are within tolerance.

Triangle Amplitude Adjustment

15. Set 8111A:

WAVEFORM ..... Triangle
AMPLITUDE (VERNIER) 16.00V
AMPL ATTENUATOR ..... released
OUTPUT MODE ..... SYM,NORM

16. Set DVM to AC.
17. Adjust A5 R10 for 4.62V ±0.1V.

THD Adjustment

18. Set 8111A:

OPERATING MODE ..... NORMAL
WAVEFORM ..... sine
FREQUENCY RANGE 1-10kHz
FREQUENCY (VERNIER) 3kHz
DUTY CYCLE ..... fixed 50%
AMPLITUDE (VERNIER) 16.00V
AMPL ATTENUATOR ..... released
OFFSET (VERNIER) 0V
OFFSET ATTENUATOR ..... released
OUTPUT ATTENUATOR ..... released
OUTPUT MODE . . . . . SYM, NORM/COMPL as required

19. Connect 8111A to a spectrum analyser and adjust its input amplifier so that the fundamental equals OdB on display.
20. Adjust A6R10/R17 for THD < 1% for NORM and COMPL modes.Ensure that minimum difference exists between the corresponding harmonic values in each mode,i.e. the 2nd harmonic value in NORM should be as close as possible to the 2nd harmonic in COMPL etc.

A6 R10 varies the 2nd harmonic. It should be ≤-45dB
A6 R17 varies the 3rd harmonic. It should be ≤-47dB
NOTE: For this adjustment,the use of a distortion analyser enables a direct readout of the THD percentage value.

Sine Amplitude Adjustment

21. Connect 8111A output to DVM input.
22. Set DVM to AC, 10V Range
23. Adjust A6 R18 for 5.66V±0.2V.

Triangle Normal/Complement Error

24. Set 8111A:

OPERATING MODE ..... NORMAL
WAVEFORM ..... Triangle
FREQUENCY RANGE 1-10kHz
FREQUENCY (VERNIER) ..... CW
DUTY CYCLE ..... fixed 50%
AMPLITUDE (VERNIER) 16.00V
AMPL ATTENUATOR ..... released
OFFSET (VERNIER) 0V
OFFSET ATTENUATOR ..... released
OUTPUT ATTENUATOR ..... released
OUTPUT MODE ..... SYM, NORM

25. Set DVM to DC, 10V Range. Use built-in filter or set-up as shown in Figure 5-3.
26. Change output mode from NORM to COMPL and back.
27. Adjust A6 R15 for minimum difference between NORM and COMPL output mode

Sine Normal/Complement Error

28. Set 8111A:

WAVEFORM ..... Sine

29. Change output mode from NORM to COMPL and back.
30. Adjust A6 R14 for minimum difference between NORM and COMPL output mode.

If difference >100mV, adjust A6R50 for <40mV difference and repeat the the procedure for Square Normal/Compl Error and Triangle Normal /Compl Error. Check again for minimum (>100mV) difference in Sine Normal/Compl Error.

POS/NEG-Baseline Adjustment

31. Set 8111A:

WAVEFORM ..... SQUARE
AMPLITUDE (VERNIER) ..... CCW
AMPL ATTENUATOR ..... -20dB
OUTPUT MODE .....NORM,POS/NEG as required

32. Connect 8111A output to scope input.
33. Set Scope to 0.02V/Division.
34. Adjust A6 R36 for minimum baseline difference between POS and NEG output mode.

5-5 WIDTH ADJUSTMENT

EQUIPMENT:
Counter

1. Set 8111A:

OPERATING MODE . . . . . NORMAL
WAVEFORM . . . . . Pulse
FREQUENCY RANGE 1-10kHz
FREQUENCY (VERNIER) 5kHz
WIDTH RANGE 10-100µs
WIDTH VERNIER 40.0µs
AMPLITUDE (VERNIER) . . . . . CW
AMPL ATTENUATOR . . . . . −20dB
OFFSET (VERNIER) 0V
OFFSET ATTENUATOR . . . . . released
OUTPUT ATTENUATOR . . . . . released
OUTPUT MODE . . . . . SYM, NORM

2. Set Counter: TIME INTERVAL A→B Slope A⎍
   Slope B⎍COM A Trigger level 0V

If possible use an averaged TI- measurement over at least 10 time intervals.

3. Set A4 R34 to its mid position.
4. Adjust A4 R41 for 40µs ±0,4µs.
5. Set 8111A:

WIDTH RANGE 100-1000ns
WIDTH (VERNIER) 400ns

4. Adjust A4 C1 for 400ns ±4ns.
7. Set 8111A:

WIDTH RANGE 25-100ns
WIDTH (VERNIER) 100.0ns

8. Connect 8111 A OUTPUT to a sampling scope (use 20dB attenuator)
9. Adjust A4 R34 for 100ns ±2ns.
10. Set 8111A:

WIDTH (VERNIER) 25.0ns

11. Check pulse width for 25ns ±2ns

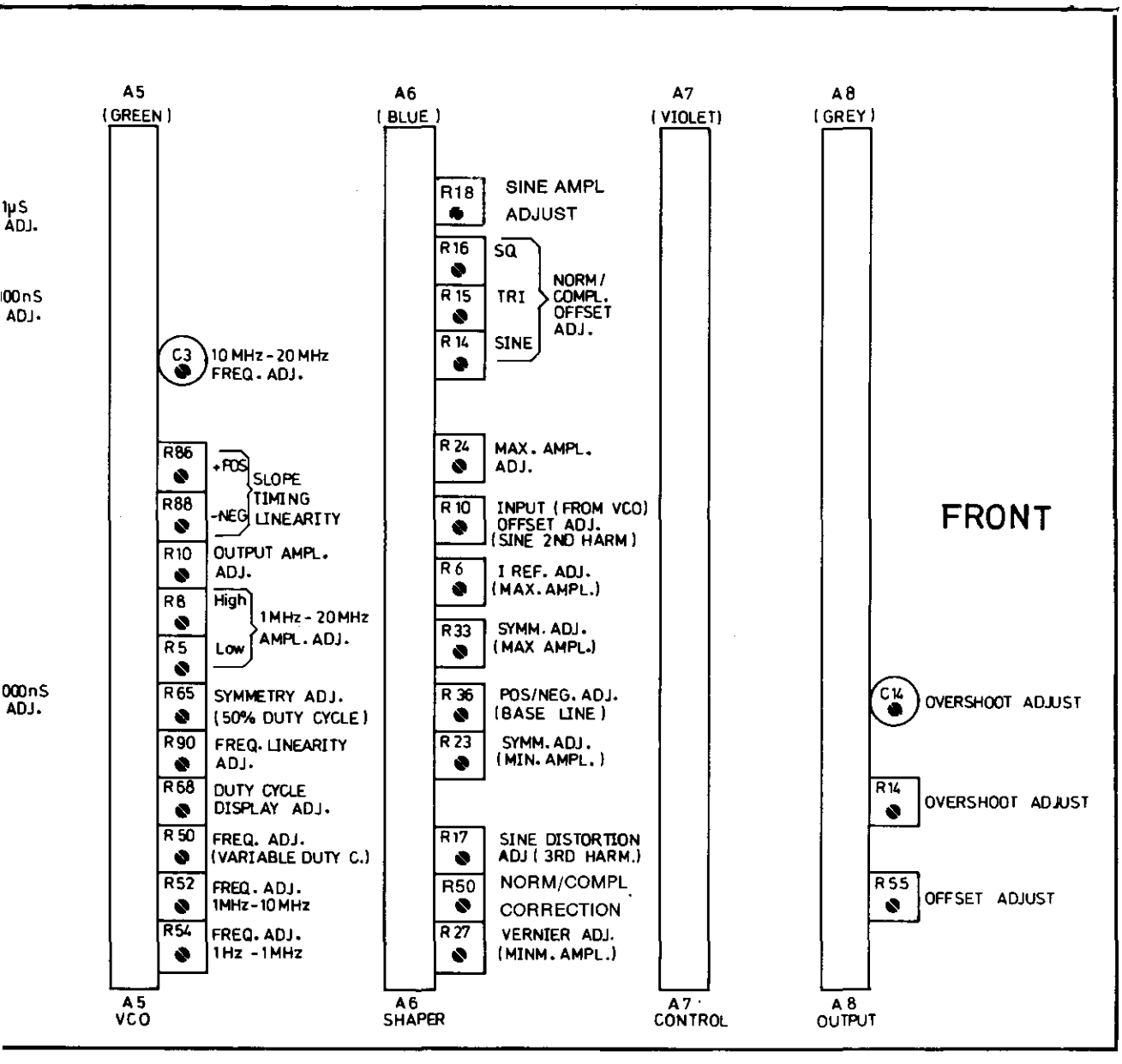

Figure 5–2. Adjustments point location diagram

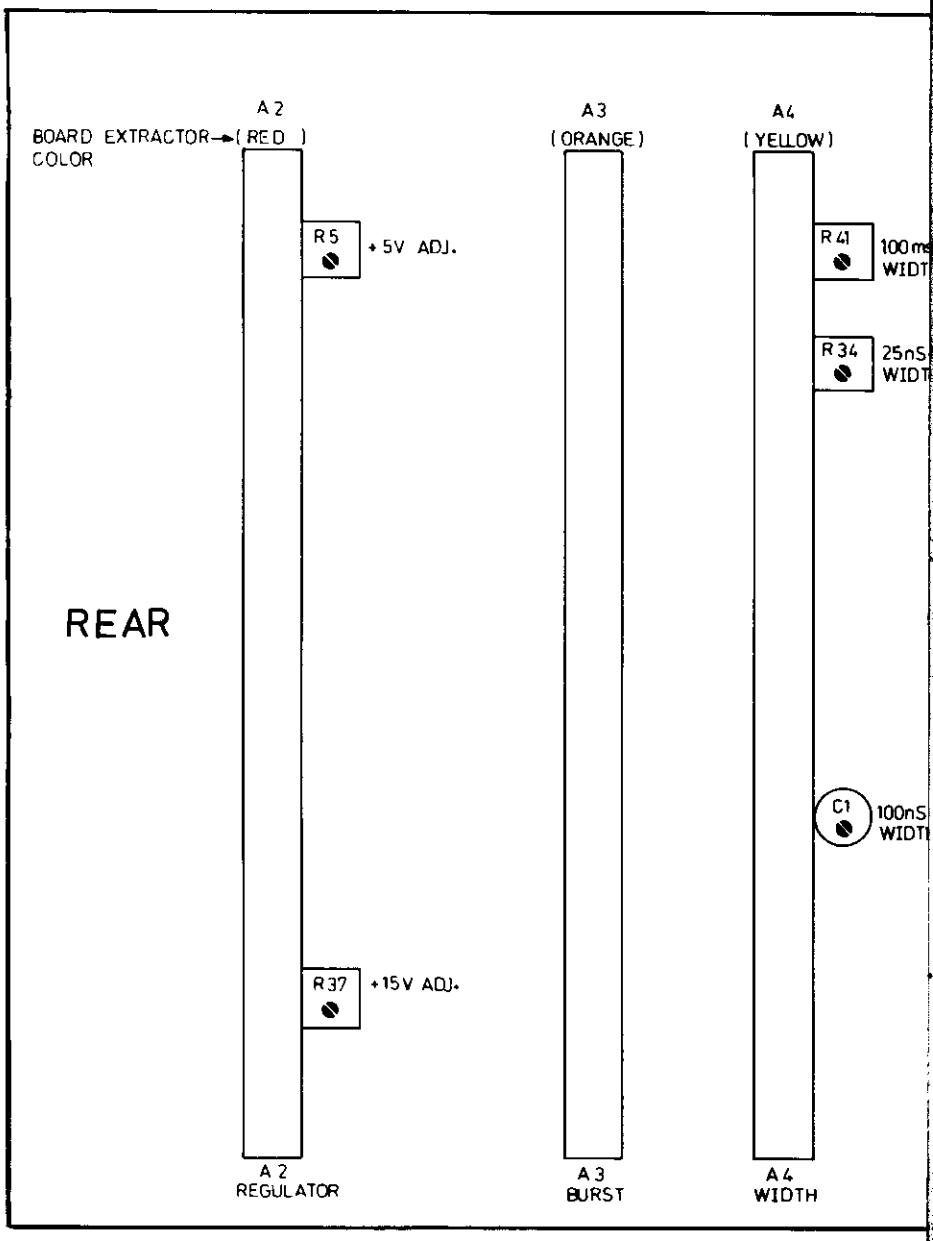
A 2
BOARD EXTRACTOR→(RED)
COLOR
A3
(ORANGE)
A4
(YELLOW)
R5
+ 5V ADJ.
R41
100ms
WIDT
R34
25nS
WIDT
REAR
C1
100nS
WIDT
R37
+15V ADJ.
A 2
REGULATOR
A 3
BURST
A 4
WIDTH

SECTION VI
REPLACEABLE PARTS

6–1 INTRODUCTION

6–2 This section contains information for ordering parts. Table 6–1 lists abbreviations used in the parts lists and elsewhere in the manual. Table 6–2 contains the names and addresses that correspond to the manufacturer code numbers. Table 6–3 lists all replaceable parts in reference designator order.

6–3 ABBREVIATIONS

6–4 Table 6–1 lists abbreviations used in the parts lists, schematics and elsewhere in the manual. In some cases two forms of the abbreviations are used, one all in capital letters, and one partial or no capitals. This occurs because the abbreviations in the parts lists are always all capitals. However, in the schematics and other parts of the manual, the same abbreviations may have upper and lower case letters.

6–5 REPLACEABLE PARTS

6–6 Table 6–3 is the list of replaceable parts and is organised as follows:

a. Mainframe (chassis) parts in alphanumerical order by reference designation.
b. Electrical assemblies and their components in alpha-numerical order by reference designation.

Reference designators are of the form A5R9 i.e. resistor 9 assembly 5. The blue pages at the end of this section list the parts required for Option 001.

6–7 The information given for each part consists of the following:

a. The Hewlett-Packard part number.
b. The description of the part.
c. Part number check digit (CD).

6–8 ORDERING INFORMATION

6–9 To order a part listed in the replaceable parts table, quote the Hewlett-Packard part number (with check digit), indicate the quantity required, and address the order to the nearest Hewlett-Packard office (list of Sales/Service offices at the rear of this manual). The check digit will ensure accurate and timely processing of your order.

6–10 To order a part that is not listed in the replaceable parts table, include the instrument model number, instrument serial number, the description and function of the part, and the number of parts required, address the order to the nearest Hewlett-Packard office.

6–11 DIRECT MAIL ORDER SYSTEM (USA)

6–12 Within the USA, Hewlett-Packard can supply parts through a direct mail order system. Advantages of using the system are as follows:

a. Direct ordering and shipment from the HP Parts Center in Mountain View, California.

b. No maximum or minimum on any mail order (there is a minimum order amount for parts ordered through a local HP office when the orders require billing and invoicing).

c. Prepaid transportation (there is a small handling charge for each order).

d. No invoices — to provide these advantages, a check or money order must accompany each order.

6–13 Mail order forms and specific ordering information is available through your local HP office. Addresses and phone numbers are located at the back of this manual.

Table 6–1. Abbreviations for Replaceable Parts List

REFERENCE DESIGNATIONS

A . . . . . assembly
AT . . . attenuator; isolator; termination
B . . . . . fan; motor
BT . . . . . battery
C . . . . . capacitor
CP . . . . . coupler
CR . . . . . diode; diode thyristor; varactor
DC . . . directional coupler
DL . . . . . delay line
DS . . . . . annunciator; signaling device (audible or visual); lamp; LED
E . . . . . miscellaneous electrical part
F . . . . . fuse
FL . . . . . filter
H . . . . . hardware
HY . . . . . circulator
J . . . . electrical connector (stationary portion); jack
K . . . . . relay
L . . . . . coil; inductor
M . . . . . meter
MP . . . . . miscellaneous mechanical part
P . . . . electrical connector (movable portion); plug
Q . . . . . transistor: SCR; triode thyristor
R . . . . . resistor
RT . . . . . thermistor
S . . . . . switch
T . . . . . transformer
TB . . . . . terminal board
TC . . . . . thermocouple
TP . . . . . test point
U . . . . . integrated circuit; microcircuit
V . . . . . electron tube
VR . . . . voltage regulator; breakdown diode
W . . . . cable; transmission path; wire
X . . . . . socket
Y . . . . crystal unit (piezoelectric or quartz)
Z . . . . tuned cavity; tuned circuit

ABBREVIATIONS

A . . . . . ampere
ac . . . . alternating current
ACCESS . . . . . accessory
ADJ . . . . . adjustment
A/D . . . . . analog-to-digital
AF . . . . . audio frequency
AFC . . . . . automatic frequency control
AGC . . . . . automatic gain control
AL . . . . . aluminum
ALC . . . . automatic level control
AM . . . amplitude modulation
AMPL . . . . . amplifier
APC . . . . automatic phase control
ASSY . . . . . assembly
AUX . . . . . auxiliary
avg . . . . . average
AWG . . . . . American wire gauge
BAL . . . . . balance
BCD . . . . . binary coded decimal
BD . . . . . board
BE CU . . . . . beryllium copper
BFO . . . . beat frequency oscillator
BH . . . . . binder head
BKDN . . . . . breakdown
BP . . . . . bandpass
BPF . . . . . bandpass filter
BRS . . . . . brass
BWO . . . . backward-wave oscillator
CAL . . . . . calibrate
ccw . . . . counter-clockwise
CER . . . . . ceramic
CHAN . . . . . channel
cm . . . . . centimeter
CMO . . cabinet mount only
COAX . . . . . coaxial
COEF . . . . . coefficient
COM . . . . . common
COMP . . . . . composition
COMPL . . . . . complete
CONN . . . . . connector
CP . . . . . cadmium plate
CRT . . . cathode-ray tube
CTL . . . . complementary transistor logic
CW . . . . continuous wave
cw . . . . . clockwise
cm . . . . . centimeter
D/A . . . . . digital-to-analog
dB . . . . . decibel
dBm . . . . decibel referred to 1 mW
dc . . . . . direct current
deg . . degree (temperature interval or difference)
. .° . . . degree (plane angle)
°C . . . . . degree Celsius (centigrade)
°F . . . . degree Fahrenheit
°K . . . . . degree Kelvin
DEPC . . deposited carbon
DET . . . . . detector
diam . . . . . diameter
DIA . . . diameter (used in parts list)
DIFF AMPL . . . differential amplifier
div . . . . . division
DPDT . . . . . double-pole, double-throw
DR . . . . . drive
DSB . . . . double sideband
DTL . . . . diode transistor logic
DVM . . . . digital voltmeter
FCL . . . . emitter coupled logic
EMF . . electromotive force
EDP . . . . . electronic data processing
ELECT . . . . . electrolytic
ENCAP . . . . . encapsulated
EXT . . . . . external
F . . . . . farad
FET . . . . . field-effect transistor
F/F . . . . . flip-flop
FH . . . . . flatt head
FIL H . . . . . fillister head
FM . frequency modulation
FP . . . . . front panel
FREQ . . . . . frequency
FXD . . . . . fixed
g . . . . . gram
GE . . . . . germanium
GHz . . . . . gigahertz
GL . . . . . glass
GRD . . . . . ground(ed)
H . . . . . henry
h . . . . . hour
HET . . . . . heterodyne
HEX . . . . . hexagonal
HD . . . . . head
HDW . . . . . hardware
HF . . . . . high frequency
HG . . . . . mercury
HI . . . . . high
HP . . . . . Hewlett-Packard
HPF . . . . . high pass filter
HR . . . . . hour (used in parts list)
HV . . . . . high voltage
Hz . . . . . Hertz
IC . . . . . integrated circuit
ID . . . . . inside diameter
IF . . . . . intermediate frequency
IMPG . . . . . impregnated
in . . . . . inch
INCD . . . . . incandescent
INCL . . . . . include(s)
INP . . . . . input
INS . . . . . insulation
INT . . . . . internal
kg . . . . . kilogram
kHz . . . . . kilohertz
kΩ . . . . . kilohm
kV . . . . . kilovolt
lb . . . . . pound
LC . . . . . inductance-capacitance
LED . . light-emitting diode
LF . . . . . low frequency
LG . . . . . long
LH . . . . . left hand
LIM . . . . . limit
LIN . . . . linear taper (used in parts list)
lin . . . . . linear
LK WASH . . . lock washer
LO . . . low; local oscillator
LOG . . . logarithmic taper (used in parts list)
log . . . . . logarithm(ic)
LPF . . . . . low pass filter
LV . . . . . low voltage
m . . . . . meter (distance)
mA . . . . . milliampere
MAX . . . . . maximum
MΩ . . . . . megohm
MEG . . . . meg (10^6) (used in parts list)
MET FLM . . . . metal film
MET OX . . . metallic oxide
MF . . . medium frequency; microfarad (used in parts list)
MFR . . . . . manufacturer
mg . . . . . milligram
MHz . . . . . megahertz
mH . . . . . millihenry
mho . . . . . mho
MIN . . . . . minimum
min . . . . . minute (time)
. . . . . minute (plane angle)
MINAT . . . . . miniature
mm . . . . . millimeter
MOD . . . . . modulator
MOM . . . . . momentary
MOS . . . . . metal-oxide semiconductor
ms . . . . . millisecond
MTG . . . . . mounting
MTR . . . meter (indicating device)
mV . . . . . millivolt
mVac . . . . . millivolt, ac
mVdc . . . . . millivolt, dc
mVpk . . . . millivolt, peak
mVp-p . . . millivolt, peak-to-peak
mVrms . . . . millivolt, rms
mW . . . . . milliwatt
MUX . . . . . multiplex
MY . . . . . mylar
μA . . . . . microampere
μF . . . . . microfarad
μH . . . . . microhenry
μmho . . . . . micromho
μs . . . . . microsecond
μV . . . . . microvolt
μVac . . . . . microvolt, ac
μVdc . . . . . microvolt, dc
μVp-p . . . microvolt, peak-to-peak
μVrms . . . . microvolt, rms
μW . . . . . microwatt
nA . . . . . nanoampere
NC . . . . . no connection
N/C . . . . . normally closed
NE . . . . . neon
NEG . . . . . negative
nF . . . . . nanofarad
NI PL . . . . . nickel plate
N/O . . . . . normally open
NOM . . . . . nominal

NOTE

All abbreviations in the parts list will be in upper-case.

Table 6–1. Abbreviations for Replaceable Parts List (cont'd)

NORM . . . . . normal
NPN . . . negative-positive-negative
NPO . . . . negative-positive zero (zero temperature coefficient)
NRFR . . not recommended for field replacement
NSR . . . . . not separately replaceable
ns . . . . . nanosecond
nW . . . . . nanowatt
OBD . order by description
OD . . . . outside diameter
OH . . . . . oval head
OP AMPL . . . . operational amplifier
OPT . . . . . option
OSC . . . . . oscillator
OX . . . . . oxide
oz . . . . . ounce
Ω . . . . . ohm
P . . . . peak (used in parts list)
PAM . . . . pulse-amplitude modulation
PC . . . . . printed circuit
PCM . . pulse-code modulation; pulse-count modulation
PDM . . . . . pulse-duration modulation
pF . . . . . picofarad
PH BRZ . phosphor bronze
PHL . . . . . Phillips
PIN . . . . positive-intrinsic-negative
PIV . . . . . peak inverse voltage
pk . . . . . peak
PL . . . . . phase lock
PLO . . . . . phase lock oscillator
PM . . . . phase modulation
PNP . . . . positive-negative-positive
P/O . . . . . part of
POLY . . . . . polystyrene
PORC . . . . . porcelain
POS . . positive; position(s) (used in parts list)
POSN . . . . . position
POT . . . . . potentiometer
p-p . . . . . peak-to-peak
PP . . . peak-to-peak (used in parts list)
PPM . . . . . pulse-position modulation
PREAMPL . . . preamplifier
PRF . . . . . pulse-repetition frequency
PRR . . . . pulse repetition rate
ps . . . . . picosecond
PT . . . . . point
PTM . . . . . pulse-time modulation
PWM . . . . . pulse-width modulation
PWV . . . . . peak working voltage
RC . resistance-capacitance
RECT . . . . . rectifier
REF . . . . . reference
REG . . . . . regulated
REPL . . . . . replaceable
RF . . . . . radio frequency
RFI . . . . . radio frequency interference
RH . . . . round head; right hand
RLC . . . . . resistance-inductance-capacitance
RMO . . . rack mount only
rms . . . . root-mean-square
RND . . . . . round
ROM . . read-only memory
R&P . . . . . rack and panel
RWV . . . . reverse working voltage
S . . . scattering parameter
s . . . . . second (time)
" . . second (plane angle)
S-B . . . . . slow-blow (fuse) (used in parts list)
SCR . . . silicon controlled rectifier; screw
SE . . . . . selenium
SECT . . . . . sections
SEMICON . . . . . semiconductor
SHF . . . . . superhigh frequency
SI . . . . . silicon
SIL . . . . . silver
SL . . . . . slide
SNR . . signal-to-noise ratio
SPDT . . . . . single-pole, double-throw
SPG . . . . . spring
SR . . . . . split ring
SPST . . . . . single-pole, single-throw
SSB . . . . single sideband
SST . . . . . stainless steel
STL . . . . . steel
SQ . . . . . square
SWR . . standing-wave ratio
SYNC . . . . . synchronize
T . . timed (slow-blow fuse)
TA . . . . . tantalum
TC . . . . . temperature compensating
TD . . . . . time delay
TERM . . . . . terminal
TFT . . thin-film transistor
TGL . . . . . toggle
THD . . . . . thread
THRU . . . . . through
TI . . . . . titanium
TOL . . . . . tolerance
TRIM . . . . . trimmer
TSTR . . . . . transistor
TTL . . transistor-transistor logic
TV . . . . . television
TVI . television interference
TWT . . traveling wave tube
U . . . . . micro (10^6) (used in parts list)
UF . . . microfarad (used in parts list)
UHF . . ultrahigh frequency
UNREG . . . . unregulated
V . . . . . volt
VA . . . . . voltampere
Vac . . . . . volts, ac
VAR . . . . . variable
VCO . . . voltage controlled oscillator
Vdc . . . . . volts, dc
VDCW . . volts, dc, working (used in parts list)
V(F) . . . . . volts, filtered
VFO . . variable-frequency oscillator
VHF . . . . . very-high frequency
Vpk . . . . . volts, peak
Vp-p . . volts, peak-to-peak
Vrms . . . . . volts, rms
VSWR . . . voltage standing wave ratio
VTO . . . . . voltage-tuned oscillator
VTVM . . . . Vacuum-tube voltmeter
V(X) . . . . volts, switched
W . . . . . watt
W . . . . . with
WIV . . . . working inverse voltage
WW . . . . . wirewound
W/O . . . . . without
YIG . . yttrium-iron-garnet
Z_0 . . . . . characteristic impedance

MULTIPLIERS

Abbreviation	Prefix	Multiple
T	tera	10^{12}
G	giga	10^{9}
M	mega	10^{6}
k	kilo	10^{3}
da	deka	10
d	deci	10^{-1}
c	centi	10^{-2}
m	milli	10^{-3}
μ	micro	10^{-6}
n	nano	10^{-9}
p	pico	10^{-12}
f	femto	10^{-15}
a	atto	10^{-18}

NOTE

All abbreviations in the parts list will be in upper-case.

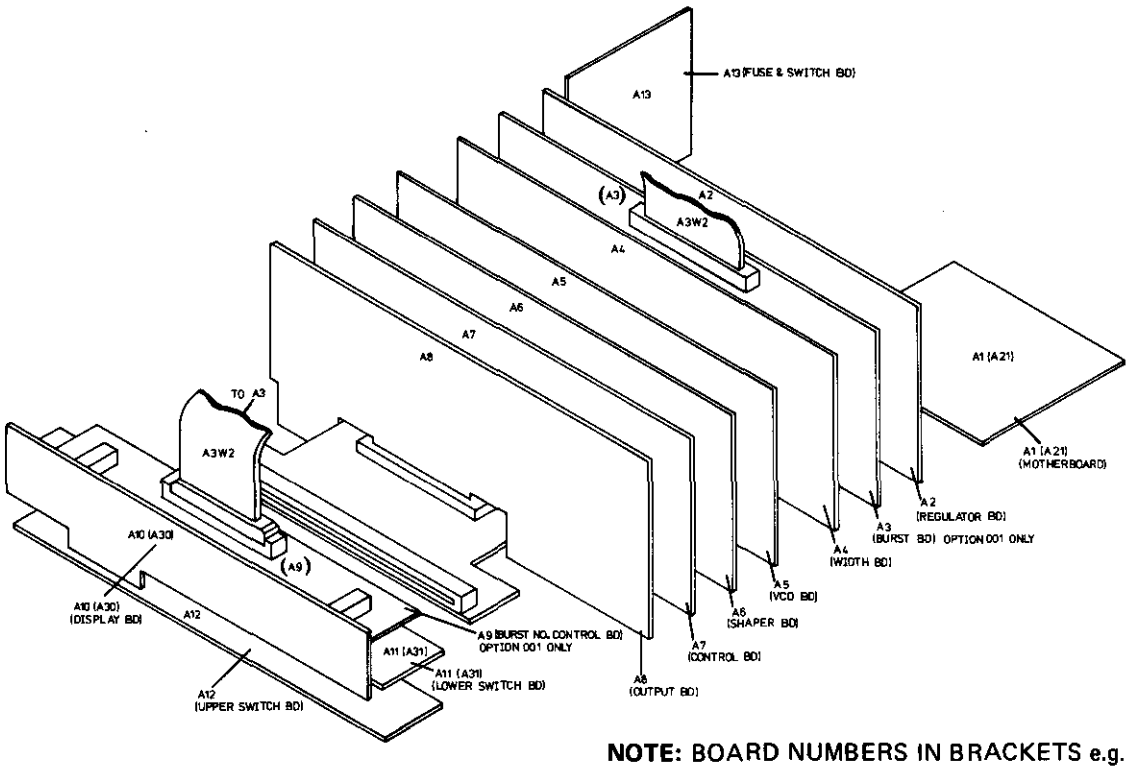

NOTE: BOARD NUMBERS IN BRACKETS e.g. (A30) ARE APPLICABLE TO OPTION 001 ONLY.
A10 & A11 (A30 & A31) ARE SUB-ASSEMBLIES OF A40 & A41 RESPECTIVELY.

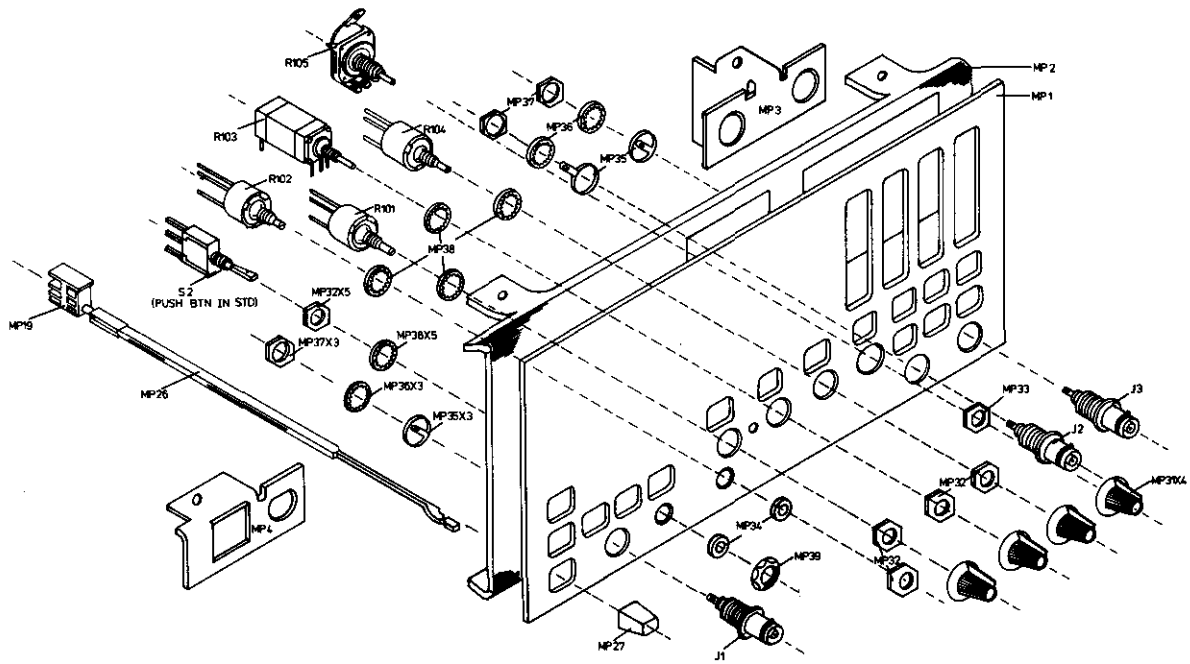

NOTE: DETAILS ON REMOVAL OF THE COMPLETE FRONT PANEL ASSEMBLY ARE GIVEN IN SERVICE BLOCK 3 (DISPLAY).

Figure 6–1. Frame Parts and Board Identification Diagram
(Instrument shown with Option 001 fitted)

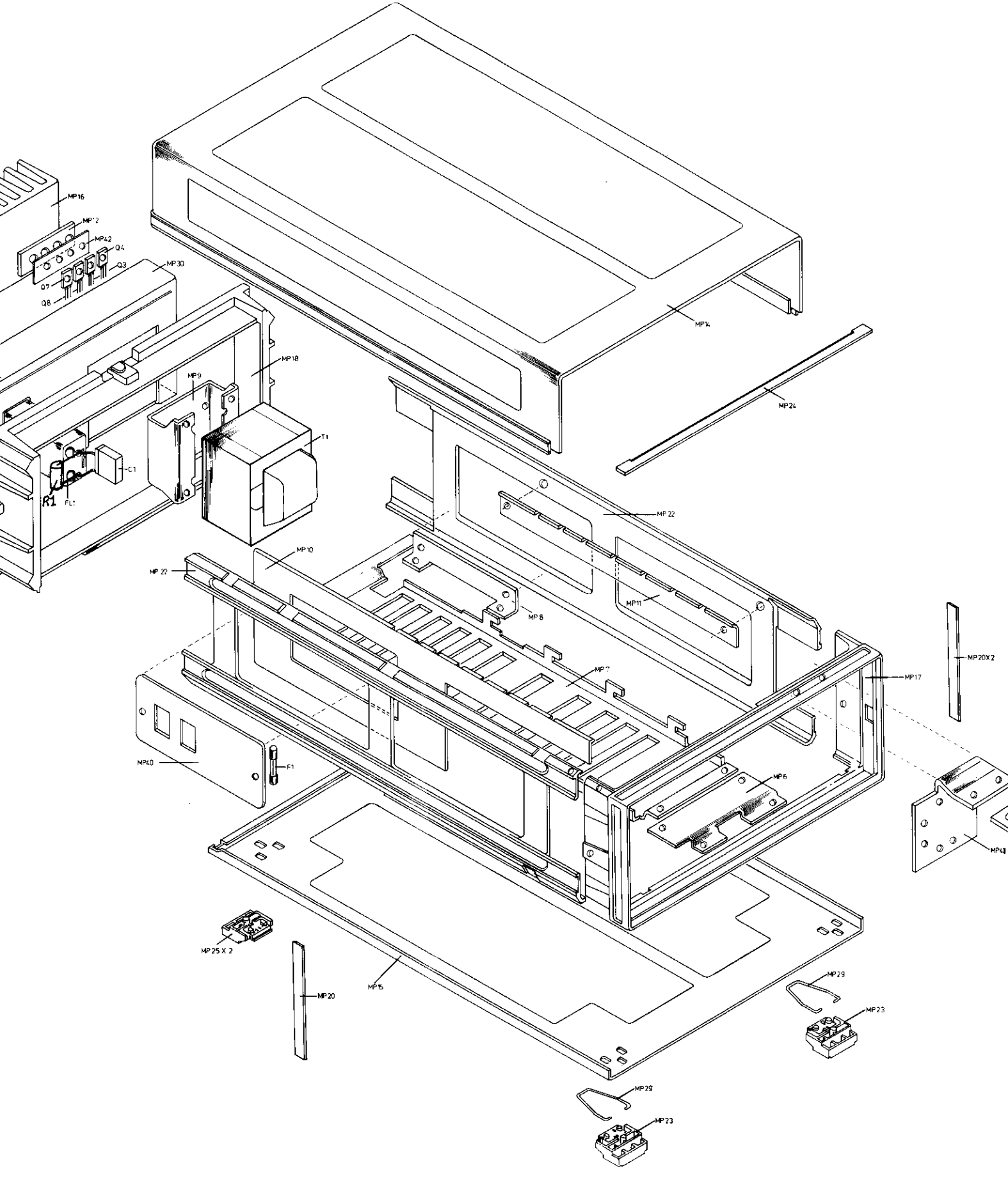
MP16
MP42
Q4
Q3
MP30
Q7
Q8
MP14
MP18
MP9
MP24
T1
C1
R1
FL1
MP22
MP10
MP22
MP11
MP8
MP20X2
MP7
MP17
MP40
F1
MP6
MP41
MP25 X 2
MP15
MP20
MP29
MP23
MP29
MP23

Table 6–3. Replaceable Parts

REFERENCE DESIGNATOR	CD	H-P PART NUMBER	DESCRIPTION
FRAME			
A1	0	08111-66501	BD AY-MOTHER
A2	1	08111-66502	BD AY-REGULATOR
A4	3	08111-66504	BD AY-WIDTH GEN
A5	4	08111-66505	BD AY VCO
A6	5	08111-66506	BD AY SHAPER
A7	6	08111-66507	BD AY-CONTROL
A8	7	08111-66508	BD AY-OUTPUT
A10 } SEE NOTE	1	08111-66510	BD AY-DISPLAY
A11 } SEE NOTE	2	08111-66511	BD AY-SWITCH UPR
A12	3	08111-66512	BD AY-SWITCH LOW
A13	4	08111-66513	BD AY-SW & FUSE
C1	8	0160-4323	C-F 0.047UF 20%
F1	1	2110-0202	FUSE .5A 250V
F2	0	2110-0201	FUSE 250V.25A SB
J1	3	1250-0118	CONN BNC BLKHD
J2	3	1250-0118	CONN BNC BLKHD
J3	3	1250-0118	CONN BNC BLKHD
L1	5	9170-0013	CORE FERRA .375
L2	5	9170-0013	CORE FERRA .375
L3	5	9170-0013	CORE FERRA .375
MP1	1	4040-1968	PANEL FRONT
MP2	9	08111-00201	PANEL SUB
MP3	8	08111-01208	BRACKET-SUB-PNL
MP4	9	08111-01209	BRACKET-SUB PNL
MP6	1	08111-01201	BRKT-FRONT
MP7	2	08111-01202	BRKT-BOTTOM
MP8	4	08111-01204	BRKT-POWER
MP9	5	08111-01205	BRKT-XFMR
MP10	6	08111-01206	BRKT-SIDE LEFT
MP11	7	08111-01207	BRKT-SIDE RIGHT
MP12	5	08111-02302	HT-SNK-XSTR
MP13	8	08111-02305	HT-SNK OUT HLDR
MP14	6	08111-04101	COVER TOP
MP15	7	08111-04102	COVER BOTTOM
MP16	2	08111-21101	HEATSINK REAR
MP17	8	5020-8813	FRAME FRONT
MP18	9	08116-21103	FRM REAR(MODIFY)
MP19	5	5040-1135	COUPLER PWR SW
MP20	7	5001-0438	TRIM STRIP
MP22	9	5020-8830	SIDE STRUTS
MP23	8	5040-7201	FOOT
MP24	0	5040-7203	TRIM STRIP
MP25	3	5040-7222	RR FEET NON-SKID
MP26	3	5040-9301	PUSH ROD-SW
MP27	9	5040-9323	KEY CAP QUARTER
MP28	7	8120-1689	GERMAN PWR CORD
MP29	5	1460-1345	TILT STAND
MP30	0	08111-00202	PANEL REAR
MP31	2	0370-1005	KNOB BASE PTR
MP32	3	2950-0072	NUT HEX .25-32
MP33	7	0535-0036	NUT HEX M7X0.75
MP34	8	08111-22501	RING
MP35	5	0360-1190	TERM-LUG SLDR
MP36	3	2190-0016	WASH-LOCK INT3/8
MP37	8	2950-0043	NUT-HEX .375-32
MP38	4	2190-0067	WASH-LOCK .408ID
MP39	1	0590-0836	NUT 1/4-40
MP40	8	08111-00606	SHIELD FUSE
MP42	3	0340-1041	INSULATOR
MP43	8	3101-0851	CAP PUSH BUTTON
Q3	6	1853-0212	XSTR 2N5194 SI
Q4	5	1854-0368	XSTR 2N5191
Q7	6	1853-0212	XSTR 2N5194 SI
Q8	5	1854-0368	XSTR 2N5191
R1	4	0698-8827	R-F 1M 1% .125W
R101	0	2100-3959	R-VAR 5K 20%
R102	3	2100-3960	R-VAR 5K 20%
R103	8	2100-3981	R-VAR 10K 10%
R104	9	2100-3958	R-VAR 1K 20%
R105	2	2100-3977	R-VAR 10K 20%
S2	6	3101-1261	SW PBTN SPDT
T1	6	08111-61101	XFMR-PWR
W1	1	08111-61601	CBL AY SIG OUT
W2	2	08111-61602	CBL AY TRIG OUT

NOTE: A10 & A11 ARE SUB-ASSEMBLIES OF A40 (08111-66540) AND ARE NOT SEPARATELY AVAILABLE.

Dedication -4111 1984 / neue Farbe -4121 1987

Table 6–3. Replaceable Parts (cont'd)

REFERENCE DESIGNATOR		C D	H-P PART NUMBER	DESCRIPTION
A1			08111-66501	BD AY-MOTHER
A1	C1		0180-3158	C-F ELCO 6800UF
A1	C2		0180-3162	C-F ELCO 4700UF
A1	C3		0180-3161	C-F ELCO 3300VF
A1	C4		0180-3161	C-F ELCO 3300VF
A1	CR1	3	1901-0638	DIO AY-SI 100V
A1	CR2	7	1906-0096	DIO-FULL WAVE BR
A1	J1	7	1251-3825	CONNECTOR, 5 PIN
A1	J2	8	1251-2026	CONN PC 36CONT R
A1	J4	8	1251-2026	CONN PC 36CONT R
A1	J5	8	1251-2026	CONN PC 36CONT R
A1	J6	8	1251-2026	CONN PC 36CONT R
A1	J7	8	1251-2026	CONN PC 36CONT R
A1	J8	8	1251-2026	CONN PC 36CONT R
A1	J12		1251-7456	CONN 25 CONT
A1	R12	1	0757-0197	R-F 1.5K1% .5W
A1	R13	1	0757-0197	R-F 1.5K1% .5W
A1	R20	6	0812-0045	R-F .15 5% 3W
A1	R21	6	0812-0045	R-F .15 5% 3W
A1	R25	9	0757-0731	R-F 825 1% .25W
A1	R28	9	0757-0731	R-F 825 1% .25W
A1	R31	4	0811-2455	R-F 2 1% 3W
A1	R32	4	0811-2455	R-F 2 1% 3W
A1	R39	3	0757-0280	R-F 1K1% .125W F
A1	R40	3	0757-0280	R-F 1K1% .125W F
A1	R41	3	0757-0280	R-F 1K1% .125W F
A1	R42	3	0757-0280	R-F 1K1% .125W F
A2			08111-66502	BD AY-REGULATOR
A2	C5	6	0180-0228	C-F 22UF 15V
A2	C6	1	0160-3724	C-F .47UF 40V
A2	C7		0180-3163	C-F 220UF 10V AL
A2	C9	8	0160-4365	C-F 470PF 5%
A2	C11	3	0160-2306	CAP 27PF 5% 300V
A2	C12	5	0180-2207	C-F 100UF 10V
A2	C14	0	0140-0193	C-F 82PF 300V
A2	C15		0180-3156	C-F ELCO 47UF63V
A2	C17	3	0140-0196	C-F 150PF 300V
A2	C18		0180-3156	C-F ELCO 47UF63V
A2	C20	3	0180-0291	C-F 1UF 35V
A2	CR3	1	1901-1098	DIO-SWIT.1N4150
A2	CR4	1	1901-1098	DIO-SWIT.1N4150
A2	CR5	1	1901-1098	DIO-SWIT.1N4150
A2	CR6	1	1901-1098	DIO-SWIT.1N4150
A2	CR7	1	1901-1098	DIO-SWIT.1N4150
A2	CR8	1	1901-1098	DIO-SWIT.1N4150
A2	CR9	1	1901-1098	DIO-SWIT.1N4150
A2	CR10	1	1901-1098	DIO-SWIT.1N4150
A2	CR11	1	1901-1098	DIO-SWIT.1N4150
A2	CR12	1	1901-1098	DIO-SWIT.1N4150
A2	CR13	1	1901-1098	DIO-SWIT.1N4150
A2	CR14	1	1901-1098	DIO-SWIT.1N4150
A2	MP1	3	4040-0748	PC EXTR BD BLK
A2	MP2	7	4040-0750	PC EXTR BD RED
A2	MP3		1205-0295	HEAT-SINK
A2	MP4		1205-0295	HEAT-SINK
A2	Q1	2	1853-0036	XSTR SI 2N3906
A2	Q2	2	1853-0036	XSTR SI 2N3906
A2	Q5	1	1854-0215	XSTR SI 2N3904
A2	Q6	2	1853-0036	XSTR SI 2N3906
A2	Q9	1	1854-0637	XSTR SI 2219A
A2	Q10	9	1853-0314	XSTR 2N2905A PNP
A2	R1	5	0757-0349	R-F 22.6K1%
A2	R2	0	0698-4483	R-F 18.7K1%
A2	R3	9	0698-4458	R-F 590 1% .125W
A2	R4	2	0698-3495	R-F 866 1% .125W
A2	R5	2	2100-3349	R-VAR 100 -+10%
A2	R6	2	0698-4401	R-F 95.3 1%
A2	R7	5	0698-3456	R-F 287K1% .125W
A2	R8	7	0757-0200	R-F 5.62K1%
A2	R9	6	0698-4520	R-F 143K1% .125W
A2	R10	2	0757-0453	R-F 30.1K1%.125W
A2	R14	8	0757-0178	R-F 100 1% .25W
A2	R15	8	0757-0178	R-F 100 1% .25W
A2	R16	2	0757-0411	R-F 332 1% .125W
A2	R17	6	0698-3499	R-F 40.2K1%
A2	R18	6	0698-3499	R-F 40.2K1%
A2	R19		0698-4421	R-F 249 1% .125W
A2	R22	9	0698-3153	R-F 3.83K1%
A2	R23	4	0698-4502	R-F 64.9K1%
A2	R24	2	0698-6887	R-F 20.8K 5%
A2	R26	0	0757-0401	R-F 100 1% .125W
A2	R27	0	0757-0401	R-F 100 1% .125W
A2	R29	7	0698-8961	R-F 909K 1% .125
A2	R30	6	0698-8704	R-F 665K
A2	R33	7	0698-4521	R-F 154K1% .125W
A2	R34	9	0698-8038	R-F 5.9K K%
A2	R35	2	0698-3247	R-F 4.53K.25%
A2	R36	0	0757-0401	R-F 100 1% .125W
A2	R37	5	2100-3350	R-VAR 200 10%
A2	R38	3	0757-0280	R-F 1K1% .125W F
A2	R40		1810-0567	R-NETWORK 8X20K
A2	R41	3	1810-0037	R-NETWORK DIP
A2	U1	7	1826-0161	IC-LM 324N
A2	U2	7	1826-0161	IC-LM 324N
A2	U3	9	1826-0147	IC V RGLTR
A2	U4	6	1826-0277	IC LM 320 V RGLT
A2	VR1	7	1902-0680	DIO 6.2V 5% .25W
A2	VR2	8	1902-0962	DIODE,ZENER
A2	VR3	8	1902-0962	DIODE,ZENER
A4			08111-66504	BD AY-WIDTH GEN
A4	C1	6	0121-0165	C-VAR 7-25PF
A4	C2	3	0160-3875	C-F 22PF 5% 200V
A4	C3	2	0160-2454	C-F 620PF 300V
A4	C4	7	0160-4348	C-F 6800PF 100V
A4	C5	9	0160-4580	C-F .068UF 1%
A4	C6	4	0160-4577	C-F .68UF 1% 40V
A4	C7	2	0160-4575	C-F 6.8UF 2% 40V
A4	C8	9	0160-0174	C-F .47UF 25VCER
A4	C9	9	0160-0174	C-F .47UF 25VCER
A4	C10	3	0160-4386	C-F 33PF 5% 200V

Table 6–3. Replaceable Parts (cont'd)

REFERENCE DESIGNATOR		C D	H-P PART NUMBER	DESCRIPTION
A4	C11	7	0160-3879	C-F .01UF 100V
A4	C12	9	0160-0174	C-F .47UF 25VCER
A4	C13	5	0160-0576	C-F .1UF 20% CER
A4	C14	1	0180-0116	C-F 6.8UF 35V TA
A4	C15	7	0160-3879	C-F .01UF 100V
A4	C16	5	0160-0576	C-F .1UF 20% CER
A4	C17	3	0180-0291	C-F 1UF 35V
A4	C18	4	0160-4527	C-F 56PF 5% 200V
A4	C19	5	0160-0576	C-F .1UF 20% CER
A4	C21	5	0160-0576	C-F .1UF 20% CER
A4	C22	5	0160-0576	C-F .1UF 20% CER
A4	CR2	8	1901-0047	DIO SI 20V 10NS
A4	CR3	1	1901-1098	DIO-SWIT.1N4150
A4	CR4	1	1901-1098	DIO-SWIT.1N4150
A4	CR5	1	1901-1098	DIO-SWIT.1N4150
A4	CR8	1	1901-1098	DIO-SWIT.1N4150
A4	CR9	1	1901-1098	DIO-SWIT.1N4150
A4	CR10	1	1901-1098	DIO-SWIT.1N4150
A4	CR11	1	1901-1098	DIO-SWIT.1N4150
A4	CR12	7	1901-0179	DIO SI 15V .75NS
A4	L1	0	9100-2251	COIL-CHOKE .22UH
A4	MP1	3	4040-0748	PC EXTR BD BLK
A4	MP2	9	4040-0752	PC EXTR BD YEL
A4	Q1	2	1854-0795	XSTR MPS-H10
A4	Q2	2	1854-0795	XSTR MPS-H10
A4	Q3	2	1854-0795	XSTR MPS-H10
A4	Q4	2	1853-0036	XSTR SI 2N3906
A4	Q5	2	1853-0036	XSTR SI 2N3906
A4	Q6	2	1853-0036	XSTR SI 2N3906
A4	Q7	2	1853-0036	XSTR SI 2N3906
A4	Q8	2	1853-0036	XSTR SI 2N3906
A4	Q9	2	1853-0036	XSTR SI 2N3906
A4	Q10	7	1853-0354	XSTR MPS H81
A4	Q11	7	1853-0354	XSTR MPS H81
A4	Q14	2	1853-0036	XSTR SI 2N3906
A4	Q15	7	1853-0354	XSTR MPS H81
A4	R1	6	0757-0407	R-F 200 1% .125W
A4	R2	9	0698-3442	R-F 237 1% .125W
A4	R3	8	0757-0417	R-F 562 1% .125W
A4	R4	2	0698-3437	R-F 133 1% .125W
A4	R5	9	0757-0278	R-F 1.78K1%
A4	R6	8	0757-0433	R-F 3.32K1%
A4	R7	0	0698-4425	R-F 1.54K1%
A4	R8	0	0698-4037	R-F 46.4 1%
A4	R9	7	0698-3432	R-F 26.1 1%
A4	R10	6	0698-3431	R-F 23.7 1%
A4	R11	2	0698-3495	R-F 866 1% .125W
A4	R12	6	0698-3150	R-F 2.37K1%
A4	R13	0	0698-3443	R-F 287 1% .125W
A4	R14	3	0698-4379	R-F 44.2 1%
A4	R15	5	0699-0070	R-F 3.16M 1%
A4	R16	5	0699-0070	R-F 3.16M 1%
A4	R17	5	0699-0070	R-F 3.16M 1%
A4	R18	5	0699-0070	R-F 3.16M 1%
A4	R19	5	0699-0070	R-F 3.16M 1%
A4	R20		1810-0337	R-NETWORK 8X4.7K
A4	R21	4	0757-0398	R-F 75 1% .125W
A4	R22	6	0698-3431	R-F 23.7 1%
A4	R25	0	0757-0394	R-F 51.1 1%
A4	R26	2	0698-3437	R-F 133 1% .125W
A4	R27	1	1810-0275	R-NETW 9X1KOHM
A4	R31	5	0698-4123	R-F 499 1% .125W
A4	R32	0	0757-0401	R-F 100 1% .125W
A4	R33	5	0757-0290	R-F 6.19K1%
A4	R34	5	2100-3350	R-VAR 200 10%
A4	R35	9	0757-0418	R-F 619 1% .125W
A4	R36	9	0757-0442	R-F 10K1% .125W
A4	R37	9	0757-0442	R-F 10K1% .125W
A4	R39	3	0698-4428	R-F 1.69K1%
A4	R40	0	0698-4433	R-F 2.26K1%
A4	R41	1	2100-3273	R-VAR 2K 10%
A4	R42	5	0757-0274	R-F 1.21K1%
A4	R43	0	0698-3245	R-F 20.5K1%
A4	R44	3	0757-0438	R-F 5.11K1%
A4	R45	9	0698-0084	R-F 2,15K 1%.125
A4	R47	9	0757-0442	R-F 10K1% .125W
A4	R55	7	0698-3432	R-F 26.1 1%
A4	R57	3	0698-4014	R-F 787 1% .125W
A4	R60	9	0757-0442	R-F 10K1% .125W
A4	R62	6	0757-0465	R-F 100K1% .125W
A4	R63	4	0757-0405	RES 162 1%.125W
A4	U1	7	1826-0111	IC-DUAL OP AMPL
A4	U2	7	1826-0111	IC-DUAL OP AMPL
A4	U3	7	1826-0161	IC-LM 324N
A4	U4	7	1826-0161	IC-LM 324N
A4	U5	3	1820-1216	IC-SN74LS138
A4	U6	1	1820-0802	IC-ECL 10102
A4	U7	8	1820-0817	IC DGTL MC 10131
A4	U8	3	1826-0026	IC-DGTL LM311H
A4	VR1	6	1902-0944	DIODE-ZENER
A4	VR2	2	1902-0958	DIO ZNR 10V 5%
A5			08111-66505	BD AY VCO
A5	C1	0	0160-4383	C-F 6.8PF 200V
A5	C2	8	0160-4521	C-F 12PF 5% 200V
A5	C3	6	0121-0165	C-VAR 7-25PF
A5	C4	1	0160-4318	C-F 330PF 1%
A5	C5	9	0160-2675	C-F 3900PF 300V
A5	C6		0160-5423	C-F .039UF 2%
A5	C7		0160-5425	C-F .39UF 2% 40V
A5	C8		0160-5460	C-F 3.9UF 63VDC
A5	C10	9	0180-0354	C-F 40UF 10V
A5	C11	2	0160-4492	C-F 18PF 200Y
A5	C13	4	0160-0575	C-F .047UF CER
A5	C14	9	0160-0174	C-F .47UF 25VCER
A5	C15	1	0160-0572	C-F 2200PF CER
A5	C16	7	0160-3879	C-F .01UF 100V
A5	C17	4	0160-0575	C-F .047UF CER
A5	C18	9	0160-0174	C-F .47UF 25VCER
A5	C20	5	0160-0576	C-F .1UF 20% CER
A5	C21	1	0160-3097	C-F .47UF CER
A5	C22	7	0160-3879	C-F .01UF 100V
A5	C24	7	0160-3879	C-F .01UF 100V
A5	CR1	1	1901-1098	DIO-SWIT.1N4150
A5	CR2	1	1901-1098	DIO-SWIT.1N4150
A5	CR3	1	1901-1098	DIO-SWIT.1N4150
A5	CR4	1	1901-1098	DIO-SWIT.1N4150
A5	CR5	1	1901-1098	DIO-SWIT.1N4150
A5	CR6	8	1901-0047	DIO SI 20V 10NS
A5	L1	9	9100-2250	COIL-CHOKE .18UH
A5	MP1	3	4040-0748	PC EXTR BD BLK

Table 6–3. Replaceable Parts (cont'd)

REFERENCE DESIGNATOR		CD	H-P PART NUMBER	DESCRIPTION
A5	MP2	0	4040-0753	PC EXTR BD GRN
A5	Q1	5	1854-0392	XSTR ST 2N 5088
A5	Q2	2	1853-0086	XSTR SI 2N5087
A5	Q3	2	1853-0086	XSTR SI 2N5087
A5	Q4	2	1853-0086	XSTR SI 2N5087
A5	Q5	2	1853-0086	XSTR SI 2N5087
A5	Q6	7	1853-0354	XSTR MPS H81
A5	Q7	7	1853-0354	XSTR MPS H81
A5	Q8	1	1854-0215	XSTR SI 2N3904
A5	Q9	1	1854-0215	XSTR SI 2N3904
A5	Q10	1	1854-0215	XSTR SI 2N3904
A5	Q11	1	1854-0215	XSTR SI 2N3904
A5	Q12	1	1854-0215	XSTR SI 2N3904
A5	Q13	1	1854-0215	XSTR SI 2N3904
A5	R1	5	0698-7226	R-F 383 1% .05W
A5	R2	4	0698-4453	R-F 402 1% .125W
A5	R3	0	0757-0401	R-F 100 1% .125W
A5	R4	8	0757-0384	R-F 20 1% .125W
A5	R5	7	2100-3352	R-VAR 1K .5W
A5	R6	1	0757-0428	RES 1.62K 1%.125
A5	R7	1	0757-0428	RES 1.62K 1%.125
A5	R8	7	2100-3352	R-VAR 1K .5W
A5	R9	2	0698-4427	R-F 1.55K1%
A5	R10	6	2100-3351	RES TRMR 500 10%
A5	R11	4	0698-3439	RES 178 1% .125W
A5	R13	2	0757-0453	R-F 30.1K1%.125W
A5	R14	6	0757-0449	R-F 20K1% .125W
A5	R15	7	0757-0200	R-F 5.62K1%
A5	R16	8	0698-3558	R-F 4.02K1%
A5	R20	7	0698-7236	R-F 1K 1% .05W
A5	R21	1	0698-3452	R-F 147K1% .125W
A5	R22	4	0757-0447	R-F 16.2K 1%.125
A5	R23	6	0698-3499	R-F 40.2K1%
A5	R24	2	0698-3271	R-F 115K1% .125W
A5	R26	5	0698-3498	R-F 8.66K1%
A5	R27	5	0698-3498	R-F 8.66K1%
A5	R28	3	0698-4501	R-F 59K1% .125W
A5	R38	9	0698-7238	R-F 1.21K 1%.05
A5	R39	2	0757-0338	R-F 1K1% .25W F
A5	R40	0	0698-3154	R-F 4.22K 1%
A5	R41	7	0757-0458	R-F 51.1K1%
A5	R42	8	0698-3136	R-F 17.8K1%
A5	R43	4	0757-0124	R-F 39.2K1%
A5	R44	0	0698-0077	R-F 93.1K 1%
A5	R45	9	0698-3484	R-F 6.65K1%
A5	R46	1	0698-4492	R-F 32.4K1%
A5	R47	2	0698-4493	R-F 34K1% .125W
A5	R48	9	0757-0442	R-F 10K1% .125W
A5	R49	6	0698-3259	R-F 7.87K1%
A5	R50	1	2100-3273	R-VAR 2K 10%
A5	R51	1	0757-0428	RES 1.62K 1%.125
A5	R52	6	2100-3351	RES TRMR 500 10%
A5	R53	4	0757-0281	R-F 2.74K1%
A5	R54	1	2100-3273	R-VAR 2K 10%
A5	R55	3	0757-0438	R-F 5.11K1%
A5	R56	6	0698-4447	R-F 280 1% .125W
A5	R57	8	0698-4308	R-F 16.9K 1%1/8W
A5	R58	1	0698-4468	R-F 1130 1% 1/8W
A5	R59	1	0698-4468	R-F 1130 1% 1/8W
A5	R60	9	0757-0418	R-F 619 1% .125W
A5	R61	2	0698-3700	R-F 715 1% .125W
A5	R62	2	0698-3700	R-F 715 1% .125W
A5	R63	5	0757-0464	R-F 90.9K1%
A5	R64	7	0698-7195	R-F 19.6 1%.05W
A5	R65	5	2100-3350	R-VAR 200 10%
A5	R67	4	0757-0281	R-F 2.74K1%
A5	R68	7	2100-3352	R-VAR 1K .5W
A5	R69	0	0698-3451	RES 133K 1%.125W
A5	R70	4	0698-8827	R-F 1M 1% .125W
A5	R71	4	0698-8827	R-F 1M 1% .125W
A5	R72	4	0698-8827	R-F 1M 1% .125W
A5	R73	4	0698-8827	R-F 1M 1% .125W
A5	R74	4	0698-8827	R-F 1M 1% .125W
A5	R75	4	0698-8827	R-F 1M 1% .125W
A5	R76		1810-0470	R-NETWORK 8X2.2K
A5	R82	4	0757-0273	R-F 3.01K1%
A5	R86	0	2100-3355	R-VAR 100K
A5	R87	9	0698-8913	RES.FXD. 1.5MOHM
A5	R88	0	2100-3355	R-VAR 100K
A5	R89	9	0698-8913	RES.FXD. 1.5MOHM
A5	R90	9	2100-3354	R-VAR 50K 10%
A5	R91	4	0698-8827	R-F 1M 1% .125W
A5	R94	7	0698-7236	R-F 1K 1% .05W
A5	R95	9	0757-0442	R-F 10K1% .125W
A5	R96	9	1810-0207	R-F ARRAY 22K
A5	U1		1826-0955	TRIANGLE/SLOPE GEN.
A5	U2	7	1826-0111	IC-DUAL OP AMPL
A5	U3	7	1826-0111	IC-DUAL OP AMPL
A5	U4	0	1826-0635	IC LIN OP07C
A5	U6	7	1826-0161	IC 324
A5	U7	7	1826-0161	IC 324
A5	U8	0	1820-0471	IC SN7406 INVERT
A5	U9	9	1826-0501	IC-CMOS 4053B
A5	U10	9	1826-0501	IC-CMOS 4053B
A5	U11	2	1820-1546	IC-4052B
A5	U12	9	1826-0501	IC-CMOS 4053B
A5	U14	3	1820-1216	IC-SN74LS138
A5	U16	6	1820-1201	IC-SN74LS08N
A5	U17	6	1820-1201	IC-SN74LS08N
A5	VR2	7	1902-0961	DIODE-ZENER
A6			08111-66506	BD AY SHAPER
A6	C1		0180-3155	C-F ELCO 100UF
A6	C2	5	0160-0576	C-F .1UF 20% CER
A6	C3	5	0160-0576	C-F .1UF 20% CER
A6	C4	5	0160-0576	C-F .1UF 20% CER
A6	C5	5	0160-0576	C-F .1UF 20% CER
A6	C6	6	0160-3878	C-F .001UF 100V
A6	C7	3	0160-3875	C-F 22PF 5% 200V
A6	C8	9	0160-0174	C-F .47UF 25VCER
A6	C9	9	0160-0174	C-F .47UF 25VCER
A6	C10	7	0180-0229	C-F 33UF 10V
A6	C11	9	0160-0174	C-F .47UF 25VCER
A6	C12	4	0160-4527	C-F 56PF 5% 200V
A6	C13	5	0160-0576	C-F .1UF 20% CER
A6	C14	9	0160-0174	C-F .47UF 25VCER
A6	C15	9	0160-0174	C-F .47UF 25VCER
A6	C16	5	0160-0576	C-F .1UF 20% CER
A6	C17	3	0160-3875	C-F 22PF 5% 200V
A6	CR1	8	1901-0047	DIO SI 20V 10NS
A6	CR2	8	1901-0047	DIO SI 20V 10NS
A6	CR3	8	1901-0047	DIO SI 20V 10NS
A6	CR4	8	1901-0047	DIO SI 20V 10NS
A6	L1	4	9100-2247	COIL-CHOKE .10UH

Table 6–3. Replaceable Parts (cont'd)

REFERENCE DESIGNATOR		C D	H-P PART NUMBER	DESCRIPTION
A6	MP1	3	4040-0748	EXTR-PC-BD POLYC
A6	MP2	1	4040-0754	PC EXTR BD BLU
A6	Q1	9	1853-0075	XSTR SI PNP
A6	Q2	2	1853-0218	XSTR SI PNP
A6	Q3	2	1853-0036	XSTR SI 2N3906
A6	Q4	7	1854-0477	XSTR NPN 2N2222A
A6	Q5	2	1854-0795	XSTR MPS-H10
A6	R1	1	1810-0275	R-NETW 9X1KOHM
A6	R2	3	0757-0280	R-F 1K 1% .125W
A6	R3	9	0698-3202	R-F 1.74K1%
A6	R4	9	0757-1094	R-F 1.47K1%
A6	R5	0	0698-4037	R-F 46.4 1%
A6	R6	7	2100-3352	R-VAR 1K .5W
A6	R8	4	0698-3132	R-F 261 1% .125W
A6	R9	1	0757-0428	R-F 1.62K 1%
A6	R10	7	2100-3352	R-VAR 1K .5W
A6	R11	1	0757-0428	R-F 1.62K 1%
A6	R12	4	0698-3132	R-F 261 1% .125W
A6	R13	8	0698-3136	R-F 17.8K1%
A6	R14	0	2100-3355	R-VAR 100K
A6	R15	0	2100-3355	R-VAR 100K
A6	R16	0	2100-3355	R-VAR 100K
A6	R17	8	2100-3353	R-VAR 20K .5W
A6	R18	8	2100-3353	R-VAR 20K .5W
A6	R19	8	0757-0277	R-F 49.9 1%
A6	R20	8	0757-0277	R-F 49.9 1%
A6	R21	9	0698-7238	R-F 1.21K 1%.05
A6	R22	3	0757-0280	R-F 1K 1% .125W
A6	R23	8	2100-3353	R-VAR 20K .5W
A6	R24	1	2100-3273	R-VAR 2K 10%
A6	R25	8	0698-3558	R-F 4.02K1%
A6	R26	8	0757-0433	R-F 3.32K1%
A6	R27	7	2100-3352	R-VAR 1K .5W
A6	R28	9	0698-3434	R-F 34.8 1%
A6	R29	0	0698-4409	R-F 127 1% .125W
A6	R30	3	0757-0280	R-F 1K 1% .125W
A6	R31	3	0757-0280	R-F 1K 1% .125W
A6	R32	0	0698-4409	R-F 127 1% .125W
A6	R33	1	2100-3273	R-VAR 2K 10%
A6	R34	5	0698-3430	R-F 21.5 1%.125W
A6	R35	5	0698-3430	R-F 21.5 1%.125W
A6	R36	1	2100-3207	R-VAR 5K 10%
A6	R37	1	0757-0999	R-F 47.5 1% .5W
A6	R38	1	0757-0999	R-F 47.5 1% .5W
A6	R39	0	0757-0401	R-F 100 1% .125W
A6	R40	0	0757-0401	R-F 100 1% .125W
A6	R41	6	0698-4421	R-F 249 1% .125W
A6	R42	1	0698-7222	R-F 261 1% .05W
A6	R43	5	0698-4123	R-F 499 1% .125W
A6	R44	8	0757-0277	R-F 49.9 1%
A6	R45	0	0757-0401	R-F 100 1% .125W
A6	R46	8	0757-0277	R-F 49.9 1%
A6	R47	0	0698-4392	R-F 71.5 1/8W 1%
A6	R48	5	0698-7226	R-F 383 1% .05W
A6	R49	0	0757-0443	R-F 11K1% .125W
A6	R50	8	2100-3353	R-VAR 20K .5W
A6	R51	7	0757-0284	R-F 150 1% .125W
A6	R52	9	0757-0442	R-F 10K1% .125W
A6	U1	2	1820-1546	ANLG MUXR
A6	U2	4	5180-2417	SHAPER SEL TEMP
A6	U3	1	1820-0802	IC MC10102P
A6	U4	5	1820-1052	IC MC10125L
A6	VR1	6	1902-3097	DIO 5.23V 2% .4W

REFERENCE DESIGNATOR		C D	H-P PART NUMBER	DESCRIPTION
A7			08111-66507	BD AY-CONTROL
A7	C1	9	0160-0174	C-F .47UF 25VCER
A7	C2	9	0160-0174	C-F .47UF 25VCER
A7	C3	4	0180-3155	C-F ELCO 100UF
A7	C4	4	0180-3155	C-F ELCO 100UF
A7	C5	9	0160-0174	C-F .47UF 25VCER
A7	C6	5	0160-0576	C-F .1UF 20% CER
A7	C7	5	0160-0576	C-F .1UF 20% CER
A7	C8	5	0160-0576	C-F .1UF 20% CER
A7	C9	9	0160-0174	C-F .47UF 25VCER
A7	C10	9	0160-0174	C-F .47UF 25VCER
A7	CR1	0	1901-0734	DIO-IN5818
A7	MP1	3	4040-0748	EXTR-PC-BD POLYC
A7	MP2	2	4040-0755	PC EXTR BD VIO
A7	R1	8	1810-0280	R-NETWORK 9X10K
A7	R2	5	0698-4123	R-F 499 1% .125W
A7	R3	9	0757-0442	R-F 10K1% .125W
A7	R4	9	0757-0442	R-F 10K1% .125W
A7	R7	5	0698-4123	R-F 499 1% .125W
A7	R9	9	0757-0442	R-F 10K1% .125W
A7	U1	5	1820-1416	IC SN74LS14N.
A7	U2	4	1820-1423	IC SN74LS123N
A7	U3	1	1820-1199	IC SN74LS04N
A7	U4	1	1820-1199	IC SN74LS04N
A7	U6	6	1820-1144	IC SN74LS02N
A7	U7	6	1820-1144	IC SN74LS02N
A7	U8	7	1820-1202	IC SN74LS10N
A7	U9	7	1820-1202	IC SN74LS10N
A7	U10	6	1820-1243	IC SN 74LS15N
A7	U11	6	1820-1243	IC SN 74LS15N
A7	U12	6	1820-1194	IC SN74LS193N
A7	U13	6	1820-1194	IC SN74LS193N
A7	U14	1	1820-1470	IC SN74LS157N
A7	U15	3	1820-1216	IC SN74LS138N
A7	U16	8	1820-1112	IC SN74LS74AN
A7	U17	6	1820-1508	IC MC14017BCP
A8			08111-66508	BD AY-OUTPUT
A8	C1	3	0160-4493	C-F 27PF 5% 200V
A8	C2	6	0180-3157	C-F ELCO 47UF40V
A8	C3	6	0180-3157	C-F ELCO 47UF40V
A8	C4	0	0160-4383	C-F 6.8PF 200V
A8	C5	6	0160-3878	C-F .001UF 100V
A8	C6	1	0160-3097	C-F .47UF CER
A8	C7	1	0160-3097	C-F .47UF CER
A8	C8	3	0160-3875	C-F 22PF 5% 200V
A8	C9	3	0160-3875	C-F 22PF 5% 200V
A8	C10	7	0160-3879	C-F .01UF 100V
A8	C11	8	0160-4381	C-F 1.5PF 200V
A8	C12	5	0160-0576	C-F .1UF 20% CER
A8	C13	5	0160-0576	C-F .1UF 20% CER
A8	C14	2	0121-0525	C-VAR 1-3PF NPO
A8	C15	5	0160-0576	C-F .1UF 20% CER
A8	C16	5	0160-0576	C-F .1UF 20% CER
A8	C17	5	0160-0576	C-F .1UF 20% CER
A8	C18	5	0180-0582	C-F 270UF 40V
A8	C19	5	0180-0582	C-F 270UF 40V
A8	C20	2	0160-4492	C-F 18PF 200V

Table 6–3. Replaceable Parts (cont'd)

REFERENCE DESIGNATOR		C D	H-P PART NUMBER	DESCRIPTION
A8	C21	1	0160-3097	C-F .47UF CER
A8	C22	4	0180-3155	C-F ELCO 100UF
A8	C23	5	0160-0576	C-F .1UF 20% CER
A8	C24	1	0160-3097	C-F .47UF CER
A8	C25	1	0160-3097	C-F .47UF CER
A8	C26	0	0160-0571	C-F 470PF20% CER
A8	C27	4	0160-4387	C-F 47PF 200V
A8	C28	8	0160-4381	C-F 1.5PF 200V
A8	CR1	7	1901-0179	DIO SI 15V .75NS
A8	CR2	7	1901-0179	DIO SI 15V .75NS
A8	CR3	7	1901-0179	DIO SI 15V .75NS
A8	CR4	7	1901-0179	DIO SI 15V .75NS
A8	CR5	7	1901-0179	DIO SI 15V .75NS
A8	CR6	7	1901-0179	DIO SI 15V .75NS
A8	K1	5	0490-1137	RELAY-REED 5V
A8	K2	5	0490-1137	RELAY-REED 5V
A8	K3	5	0490-1137	RELAY-REED 5V
A8	L1	0	9170-0894	CORE MAGNETIC
A8	*L2	0	9170-0894	CORE MAGNETIC
A8	MP1	3	4040-0748	EXTR-PC-BD POLYC
A8	MP2	2	4040-0747	PC EXTR BD GRA
A8	MP3	6	08111-02303	HEATSINK THERMO
A8	MP4	7	08111-02304	HEATSINK OUTPUT
A8	MP5	3	1205-0329	HT-SINK SGL
A8	MP6	3	1205-0329	HT-SINK SGL
A8	MP7	3	1205-0329	HT-SINK SGL
A8	MP8	3	1205-0329	HT-SINK SGL
A8	MP9	3	1205-0329	HT-SINK SGL
A8	MP10	3	1205-0329	HT-SINK SGL
A8	MP11	3	1205-0329	HT-SINK SGL
A8	MP12	3	1205-0329	HT-SINK SGL
A8	Q1	9	1854-0354	XSTR SI NPN
A8	Q2	2	1853-0218	XSTR SI PNP
A8	Q3	9	1854-0354	XSTR SI NPN
A8	Q4	2	1853-0218	XSTR SI PNP
A8	Q5	9	1853-0314	XSTR 2N2905A PNP
A8	Q6	9	1854-0784	XSTR NPN 2N3866A
A8	Q7	7	1854-0477	XSTR NPN 2N2222A
A8	Q8	1	1854-0637	XSTR SI 2N2219A
A8	Q9	9	1853-0314	XSTR 2N2905A PNP
A8	Q10	1	1854-0637	XSTR SI 2N2219A
A8	Q11	9	1853-0314	XSTR 2N2905A PNP
A8	Q12	1	1854-0637	XSTR SI 2N2219A
A8	Q13	9	1853-0314	XSTR 2N2905A PNP
A8	Q16	2	1855-0082	XSTR FET P
A8	R1	1	0757-0387	R-F 27.4 1%
A8	R2	5	0757-0282	R-F 221 1% .125W
A8	R3	0	0698-4409	R-F 127 1% .125W
A8	R7	5	0757-0349	R-F 22.6K1%.125W
A8	R10	8	0698-3516	R-F 6.34K1%
A8	R11	8	0698-3516	R-F 6.34K1%
A8	R12	4	0757-0447	R-F 16.2K 1%.125
A8	R13	8	0698-3178	R-F 487 1% .125W
A8	R14	5	2100-3350	R-VAR 200 10%
A8	R15	0	0757-0443	R-F 11K1% .125W
A8	R16	0	0757-0443	R-F 11K1% .125W
A8	R18	8	0757-0277	R-F 49.9 1%
A8	R19	8	0757-0277	R-F 49.9 1%
A8	R20	3	0757-0280	R-F 1K 1% .125W
A8	R21	3	0757-0280	R-F 1K 1% .125W
A8	R22	3	0757-0280	R-F 1K 1% .125W
A8	R23	3	0757-0280	R-F 1K 1% .125W
A8	R24	6	0757-0407	R-F 200 1% .125W
A8	R25	8	0698-3558	R-F 4.02K1%
A8	R26	8	0698-3558	R-F 4.02K1%
A8	R27	6	0757-0407	R-F 200 1% .125W
A8	R29	1	0757-0428	R-F 1.62K 1%
A8	R30	1	0757-0428	R-F 1.62K 1%
A8	R31	1	0698-4442	R-F 4.42K1%
A8	R32	1	0698-4442	R-F 4.42K1%
A8	R33	9	0757-0830	R-F 3.92K1% .5W
A8	R34	7	0698-7195	R-F 19.6 1%.05W
A8	R35	8	0698-7196	R-F 21.5 2%.05W
A8	R36	7	0698-7236	R-F 1K 1% .05W
A8	R37	1	0698-7222	R-F 261 1% .05W
A8	R38	8	0698-7196	R-F 21.5 2%.05W
A8	R39	7	0698-7195	R-F 19.6 1%.05W
A8	R40	8	0698-7188	R-F 10 2% .050W
A8	R41	8	0698-7188	R-F 10 2% .050W
A8	R42	1	0757-0428	R-F 1.62K 1%
A8	R43	1	0757-0428	R-F 1.62K 1%
A8	R44	2	0757-0346	R-F 10 1% .125W
A8	R45	2	0757-0346	R-F 10 1% .125W
A8	R46	2	0757-0346	R-F 10 1% .125W
A8	R47	2	0757-0346	R-F 10 1% .125W
A8	R48	3	0766-0025	R-F 101 2% 3W MO
A8	R49	3	0766-0025	R-F 101 2% 3W MO
A8	R50	3	0757-0818	R-F 825 1% .5W
A8	R51	2	0698-3601	R-F 10 5% 2W MO
A8	R52	2	0698-3601	R-F 10 5% 2W MO
A8	R53	2	0698-3601	R-F 10 5% 2W MO
A8	R54	2	0698-3601	R-F 10 5% 2W MO
A8	R55	8	2100-3353	R-VAR 20K .5W
A8	U1	0	1826-0635	IC LIN OP07C
A8	U2	0	1826-0635	IC LIN OP07C
A8	VR1	6	1902-0960	DIO-ZNR 12V 5%
A8	VR2	6	1902-0960	DIO-ZNR 12V 5%
A8	VR3	4	1902-0025	DIO 10V 5% .4W
A10			08111-66510	BD AY-DISPLAY
A10	C1	4	0160-4387	C-F 47PF 200V
A10	C2	9	0160-0174	C-F .47UF 25VCER
A10	C3	9	0160-0174	C-F .47UF 25VCER
A10	C4	7	0160-5437	C-F .068UF 160V
A10	C5	5	0160-0576	C-F .1UF 20% CER
A10	C8	5	0160-0576	C-F .1UF 20% CER
A10	C9	5	0160-0576	C-F .1UF 20% CER
A10	DS1	2	1990-0846	DISPLAY SOLID ST
A10	DS2	2	1990-0846	DISPLAY SOLID ST
A10	DS3	2	1990-0846	DISPLAY SOLID ST
A10	DS4	2	1990-0846	DISPLAY SOLID ST
A10	DS5	6	1990-0486	LED-VISIBLE RED
A10	DS6	6	1990-0486	LED-VISIBLE RED
A10	DS7	6	1990-0486	LED-VISIBLE RED
A10	DS8	6	1990-0486	LED-VISIBLE RED
A10	DS10	6	1990-0486	LED-VISIBLE RED
A10	DS11	6	1990-0486	LED-VISIBLE RED
A10	DS12	6	1990-0486	LED-VISIBLE RED
A10	DS13	6	1990-0486	LED-VISIBLE RED
A10	DS14	6	1990-0486	LED-VISIBLE RED
A10	DS15	6	1990-0486	LED-VISIBLE RED
A10	DS16	6	1990-0486	LED-VISIBLE RED

Table 6–3. Replaceable Parts (cont'd)

REFERENCE DESIGNATOR		C D	H-P PART NUMBER	DESCRIPTION
A10	DS17	6	1990-0486	LED-VISIBLE RED
A10	DS18	6	1990-0486	LED-VISIBLE RED
A10	DS19	0	1990-0696	LED-VISIBLE
A10	R1	9	1810-0330	R-NETWORK 8X470
A10	R2	0	0757-0401	R-F 100 1% .125W
A10	R7	1	0698-7272	R-F 31.6K 1%.05
A10	R8	5	0757-0472	R-F 200K1% .125W
A10	S1	4	3101-2530	SW RKR
A10	U1	1	1826-0876	A/D 3-1/2-DGT
A11			08111-66511	BD AY-SWITCH UPR
A11	CR11	1	1901-1098	DIO-1N4150 50V
A11	MP1	8	5040-9322	KEY-CAP QUARTER
A11	MP2	8	5040-9322	KEY-CAP QUARTER
A11	MP3	8	5040-9322	KEY-CAP QUARTER
A11	MP4	8	5040-9322	KEY-CAP QUARTER
A11	MP5	8	5040-9322	KEY-CAP QUARTER
A11	MP6	8	5040-9322	KEY-CAP QUARTER
A11	MP7	8	5040-9322	KEY-CAP QUARTER
A11	MP8	8	5040-9322	KEY-CAP QUARTER
A11	Q1	2	1853-0036	XSTR SI 2N3906
A11	Q2	1	1854-0215	XSTR SI 2N3904
A11	R11	3	0698-4436	R-F 2.8K1% .125W
A11	R12	5	0757-0274	R-F 1.21K1%
A11	R13	5	0698-4123	R-F 499 1% .125W
A11	R14	5	0698-4404	R-F 105 1% .125W
A11	R15	4	0698-4453	R-F 402 1% .125W
A11	R16	5	0698-3498	R-F 8.66K1%.125W
A11	R18	6	0757-0283	R-F 2K1% .125W F
A11	R20	5	0757-0290	R-F 6.19K1%.125W
A11	R21	0	0698-3493	R-F 4.12K1%
A11	R26	9	0757-0442	R-F 10K1% .125W
A11	R27	9	0757-0442	R-F 10K1% .125W
A11	R28	9	0757-0442	R-F 10K1% .125W
A11	R29	0	0698-3154	R-F 4.22K 1%
A11	R30	6	0757-0465	R-F 100K1% .125W
A11	R31	9	0757-0442	R-F 10K1% .125W
A11	R32	8	0757-0441	R-F 8.25K1%
A11	R33	6	0698-3499	R-F 40.2K1%
A11	R34	6	0757-0465	R-F 100K1% .125W
A11	R35	8	0698-4431	R-F 2.05K1%
A11	R41	0	0698-3279	R-F 4.99K1%
A11	R42	8	0757-0706	R-F 51.1 1% .25W
A11	R44	6	0757-0283	R-F 2K1% .125W F
A11	R45	6	0698-3449	R-F 28.7K1%
A11	R46	4	0757-0447	R-F 16.2K 1%.125
A11	S1	2	3101-1762	SW-P-BRN MOM.45A
A11	S3	5	3101-2515	SW-P-BTN 4STA
A11	S5	4	3101-2514	SW-P-BTN 3STA
A11	U11	3	1820-1745	IC MC14001BCP
A11	U12	2	1820-1546	ANLG MUXR
A11	W1	3	08111-61603	CBL AY AMPL OUT
A12			08111-66512	BD AY-SWITCH LOW
A12	DS1	5	1990-0485	LED VISIBLE GRN
A12	MP1	7	5040-9321	KEY CAP QUARTER
A12	MP2	7	5040-9321	KEY CAP QUARTER
A12	MP3	7	5040-9321	KEY CAP QUARTER
A12	MP4	7	5040-9321	KEY CAP QUARTER
A12	MP5	7	5040-9321	KEY CAP QUARTER
A12	MP6	7	5040-9321	KEY CAP QUARTER
A12	MP7	7	5040-9321	KEY CAP QUARTER
A12	R1	9	0757-0442	R-F 10K1% .125W
A12	R2	6	0698-4413	R-F 154 1% .125W
A12	R3	6	0757-0407	R-F 200 1% .125W
A12	R4	2	0757-0411	R-F 332 1% .125W
A12	R5	9	0757-0442	R-F 10K1% .125W
A12	R6	3	0757-0280	R-F 1K 1% .125W
A12	R7	0	0757-0401	R-F 100 1% .125W
A12	S2	3	3101-2513	SW-P-BTN 4STA
A12	S4	2	3101-2512	SW P-BTN LINE
A12	W2	2	5180-2407	CBL AY RBN 60MM
A13			08111-66513	BD AY-SW & FUSE
A13	S1	1	3101-2511	SW P-BTN LINE
A13	S2	6	3101-2300	SWITCH-SLIDE
A13	S3	6	3101-2300	SWITCH-SLIDE

OPTION 001

Table 6–3. Replaceable Parts (cont'd)

REFERENCE DESIGNATOR	CD	H-P PART NUMBER	DESCRIPTION
FRAME			
A3		08111-66503	BD AY-BURST
A9		08111-66509	BD AY BRSTNO.CTL
A21		08111-66521	BD AY- MOTHER
A30 } SEE NOTE		08111-66530	BD AY DISPLAY
A31 } SEE NOTE		08111-66531	BD AY-SWITCH UP
S2		3101-1701	SW TOGGLE SPDT

NOTE: A30 & A31 ARE SUB-ASSEMBLIES OF A41 (08111-66541) AND ARE NOT SEPARATELY AVAILABLE.

REFERENCE DESIGNATOR	CD	H-P PART NUMBER	DESCRIPTION
A3		08111-66503	BD AY-BURST
A3 C1	5	0160-0576	C-F .1UF 20% CER
A3 C2	3	0180-0291	C-F 1UF 35V
A3 C3	5	0160-0576	C-F .1UF 20% CER
A3 C4	5	0160-0576	C-F .1UF 20% CER
A3 C5	1	0160-0572	C-F 2200PF CER
A3 C6	6	0160-4040	C-F 1000PF 100V
A3 C7	6	0160-4371	C-F 680 PF
A3 C8	6	0160-4371	C-F 680 PF
A3 C9	5	0160-0576	C-F .1UF 20% CER
A3 C10	5	0160-0576	C-F .1UF 20% CER
A3 C11	5	0160-0576	C-F .1UF 20% CER
A3 C12	5	0160-0576	C-F .1UF 20% CER
A3 C13	5	0160-0576	C-F .1UF 20% CER
A3 C14	5	0180-2207	C-F 100UF 10V
A3 C15	2	0160-3874	C-F 10PF 200V
A3 C16	6	0160-4040	C-F 1000PF 100V
A3 CR1	1	1901-1098	DIO-SWIT.1N4150
A3 CR2	1	1901-1098	DIO-SWIT.1N4150
A3 CR3	1	1901-1098	DIO-SWIT.1N4150
A3 CR4	1	1901-1098	DIO-SWIT.1N4150
A3 MP1	3	4040-0748	PC EXTR BD BLK
A3 MP2	8	4040-0751	PC EXTR BD ORN
A3 R1	5	0757-0472	R-F 200K1% .125W
A3 R2	4	0698-4479	R-F 14K1% .125W
A3 R3	4	0698-8827	R-F 1M 1% .125W
A3 R4	1	0698-8345	R-F 634K 1% .125
A3 R5	5	0757-0472	R-F 200K1% .125W
A3 R6	7	0698-4125	R-F 953 1% .125W
A3 R7	8	1810-0206	R-NETWORK 7X10K
A3 R8	8	1810-0280	R-NETWORK 9X10K
A3 R9		0698-4421	R-F 249 1% .125W
A3 R10		0698-4421	R-F 249 1% .125W
A3 R11	6	0757-0465	R-F 100K1% .125W
A3 R12	9	0757-0442	R-F 10K1% .125W
A3 R13	9	0757-0442	R-F 10K1% .125W
A3 R14	5	0698-3498	R-F 8.66K1%
A3 R15	5	0698-4412	R-F 143 1% .125W
A3 R16	6	0757-0449	R-F 20K1% .125W
A3 U1	3	1820-1208	IC-SN74LS32
A3 U2	5	1820-1200	IC SN74LS05
A3 U3	1	1820-2014	IC DGT MC14069BC
A3 U4	6	1820-1201	IC-SN74LS08N
A3 U5	5	1820-1961	IC MC14023BCP
A3 U6	9	1820-1486	IC MC14081BCP
A3 U7	6	1820-1144	IC SN74LS02N
A3 U8	6	1820-1970	IC DIG 14071B
A3 U9	6	1820-1970	IC DIG 14071B
A3 U10	9	1820-1486	IC MC14081BCP
A3 U11	9	1820-1486	IC MC14081BCP
A3 U12	3	1820-1208	IC SN74LS32N
A3 U13	7	1820-0931	IC CD4029BE
A3 U14	7	1820-0931	IC CD4029BE
A3 U15	7	1820-0931	IC CD4029BE
A3 U16		1820-1964	IC MC14027BCP
A3 U17	1	1820-1454	IC SN745168N
A3 U18	6	1820-1277	IC SN74LS 192 N
A3 U19	6	1820-1277	IC SN74LS 192 N
A3 U20	8	1820-0693	IC SN74S74N TTL
A3 U21	4	1820-1423	IC SN74LS123N
A3 U22	4	1820-1449	IC 74S32
A3 W2		5180-2408	CBL AY RBN 280MM
A9		08111-66509	BD AY BRSTNO.CTL
A9 C1	9	0160-0174	C-F .47UF 25VCER
A9 J5	5	1251-3708	CONN-POST 10F
A9 J6	5	1251-3708	CONN-POST 10F
A9 J7	2	1251-3119	CONN 20PIN RIBN
A9 Q1	1	1854-0215	XSTR SI 2N3904
A9 R1	9	0757-0442	R-F 10K1% .125W
A9 R2	7	0757-0200	R-F 5.62K1%
A9 R3	6	0698-3499	R-F 40.2K1%
A9 R4	8	0757-0467	R-F 121K 1%
A9 R5	0	0698-3279	R-F 4.99K1%
A9 R6	8	0698-4431	R-F 2.05K1%
A9 R7	0	0698-3162	R-F 46.4K1%
A9 R8	2	0757-0453	R-F 30.1K1%.125W
A9 R9	2	0698-4435	R-F 2.49K1%
A9 R10	6	0757-0449	R-F 20K1% .125W
A9 U1	3	1820-1745	IC MC14001BCP
A9 U2	8	1820-1112	IC DGTL SN74LS74
A9 U3	6	1820-1277	IC SN74LS 192 N
A9 U4	6	1820-1277	IC SN74LS 192 N
A9 U5	6	1820-1277	IC SN74LS 192 N
A9 U6	6	1820-1277	IC SN74LS 192 N
A9 U7	3	1826-0175	IC DUAL 14-DIP
A21		08111-66521	BD AY- MOTHER
A21 C1		0180-3158	C-F ELCO 6800UF
A21 C2		0180-3162	C-F ELCO 4700UF
A21 C3		0180-3161	C-F ELCO 3300VF
A21 C4		0180-3161	C-F ELCO 3300VF
A21 CR1	3	1901-0638	DIO AY-SI 100V
A21 CR2	7	1906-0096	DIO-FULL WAVE BR
A21 J1	7	1251-3825	CONNECTOR, 5 PIN
A21 J2	8	1251-2026	CONN PC 36CONT R
A21 J3	8	1251-2026	CONN PC 36CONT R
A21 J4	8	1251-2026	CONN PC 36CONT R
A21 J5	8	1251-2026	CONN PC 36CONT R
A21 J6	8	1251-2026	CONN PC 36CONT R
A21 J7	8	1251-2026	CONN PC 36CONT R
A21 J8	8	1251-2026	CONN PC 36CONT R
A21 J12		1251-7456	CONN 25 CONT

Table 6–3. Replaceable Parts (cont'd)

REFERENCE DESIGNATOR		C D	H-P PART NUMBER	DESCRIPTION
A21	Q3	6	1853-0212	XSTR 2N5194 SI
A21	Q4	5	1854-0368	XSTR 2N5191
A21	Q7	6	1853-0212	XSTR 2N5194 SI
A21	Q8	5	1854-0368	XSTR 2N5191
A21	R12	1	0757-0197	R-F 1.5K1% .5W
A21	R13	1	0757-0197	R-F 1.5K1% .5W
A21	R20	6	0812-0045	R-F .15 5% 3W
A21	R21	6	0812-0045	R-F .15 5% 3W
A21	R25	9	0757-0731	R-F 825 1% .25W
A21	R28	9	0757-0731	R-F 825 1% .25W
A21	R31	4	0811-2455	R-F 2 1% 3W
A21	R32	4	0811-2455	R-F 2 1% 3W
A21	R39	3	0757-0280	R-F 1K1% .125W F
A21	R40	3	0757-0280	R-F 1K1% .125W F
A21	R41	3	0757-0280	R-F 1K1% .125W F
A21	R42	3	0757-0280	R-F 1K1% .125W F
A30			08111-66530	BD AY DISPLAY
A30	C1	4	0160-4494	C-F 39PF 200V
A30	C2	9	0160-0174	C-F .47UF 25VCER
A30	C3	9	0160-0174	C-F .47UF 25VCER
A30	C4		0160-5437	C-F .068UF 160V
A30	C5	5	0160-0576	C-F .1UF 20% CER
A30	C8	5	0160-0576	C-F .1UF 20% CER
A30	C9	5	0160-0576	C-F .1UF 20% CER
A30	DS1		1990-0846	DISPLAY SOLID ST
A30	DS2		1990-0846	DISPLAY SOLID ST
A30	DS3		1990-0846	DISPLAY SOLID ST
A30	DS4		1990-0846	DISPLAY SOLID ST
A30	DS5	6	1990-0486	LED-VISIBLE RED
A30	DS6	6	1990-0486	LED-VISIBLE RED
A30	DS7	6	1990-0486	LED-VISIBLE RED
A30	DS8	6	1990-0486	LED-VISIBLE RED
A30	DS9	6	1990-0486	LED-VISIBLE RED
A30	DS10	6	1990-0486	LED-VISIBLE RED
A30	DS11	6	1990-0486	LED-VISIBLE RED
A30	DS12	6	1990-0486	LED-VISIBLE RED
A30	DS13	6	1990-0486	LED-VISIBLE RED
A30	DS14	6	1990-0486	LED-VISIBLE RED
A30	DS15	6	1990-0486	LED-VISIBLE RED
A30	DS16	6	1990-0486	LED-VISIBLE RED
A30	DS17	6	1990-0486	LED-VISIBLE RED
A30	DS18	6	1990-0486	LED-VISIBLE RED
A30	DS19	0	1990-0696	LED-VISIBLE
A30	R1	9	1810-0330	R-NETWORK 8X470
A30	R2	0	0757-0401	R-F 100 1% .125W
A30	R7	1	0698-7272	R-F 31.6K 1%.05
A30	R8	5	0757-0472	R-F 200K1% .125W
A30	S1		3101-2530	SW RKR
A30	S2		3101-2530	SW RKR
A30	S3		3101-2530	SW RKR
A30	S4		3101-2530	SW RKR
A30	U1		1826-0876	AD-CONV ICL7107
A31			08111-66531	BD AY-SWITCH UP
A31	CR11	1	1901-1098	DIO-SWIT.1N4150
A31	J5	2	1251-4084	CONN POST 10MALE
A31	J6	2	1251-4084	CONN POST 10MALE
	MP1–8	8	5040-9322	KEY CAP QUARTER
A31	Q1	2	1853-0036	XSTR SI 2N3906
A31	Q2	1	1854-0215	XSTR SI 2N3904
A31	R11	3	0698-4436	R-F 2.8K1% .125W
A31	R12	5	0757-0274	R-F 1.21K1%
A31	R13	5	0698-4123	R-F 499 1% .125W
A31	R14	5	0698-4404	R-F 105 1% .125W
A31	R15	4	0698-4453	R-F 402 1% .125W
A31	R16	5	0698-3498	R-F 8.66K1%
A31	R18	6	0757-0283	R-F 2K1% .125W F
A31	R20	5	0757-0290	R-F 6.19K1%
A31	R21	0	0698-3493	R-F 4.12K1%
A31	R26	9	0757-0442	R-F 10K1% .125W
A31	R27	9	0757-0442	R-F 10K1% .125W
A31	R28	9	0757-0442	R-F 10K1% .125W
A31	R29	0	0698-3154	R-F 4.22K 1%
A31	R30	6	0757-0465	R-F 100K1% .125W
A31	R31	9	0757-0442	R-F 10K1% .125W
A31	R32	8	0757-0441	R-F 8.25K1%
A31	R33	6	0698-3499	R-F 40.2K1%
A31	R34	6	0757-0465	R-F 100K1% .125W
A31	R35	8	0698-4431	R-F 2.05K1%
A31	R41	0	0698-3279	R-F 4.99K1%
A31	R42	8	0757-0706	R-F 51.1 1% .25W
A31	R44	6	0757-0283	R-F 2K1% .125W F
A31	R45	6	0698-3449	R-F 28.7K1%
A31	R46	4	0757-0447	R-F 16.2K 1%.125
A31	S1	2	3101-1762	SW-P-BRN MOM.45A
A31	S3		3101-2515	SW-P-BTN 4STA
A31	S5		3101-2514	SW-P-BTN 3STA
A31	U11	3	1820-1745	IC MC14001BCP
A31	U12	2	1820-1546	IC-4052B

SECTION VII
BACKDATING

7–1 INTRODUCTION

7–2 This section contains backdating information which adapts this manual to instrument with serial numbers lower than that shown on the title page.

7–3 CHANGE SEQUENCE

7–4 Changes are listed in the serial number order that they occured in the manufacture of the instrument. However, in adapting this manual to an instrument with a particular serial number, apply the changes in reverse order. That is, begin with the latest change and progress to the earliest change that applies to the serial number in question. Table 7–1 lists the serial numbers to which each change applies.

Table 7-1. Manual Backdating Changes

Instrument Serial Number	Make Manual Changes
2123G00100 and lower	1 to 14
2123G00150 and lower	2 to 14
2123G00165 and lower	3 to 14
2123G00235 and lower	4 to 14
2123G00285 and lower	5 to 14
2123G00435 and lower	6 to 14
2215G00485 and lower	7 to 14
2215G00535 and lower	8 to 14
2215G00715 and lower	9 to 14
2215G00835 and lower	10 to 14
2215G01075 and lower	11 to 14
2215G01540 and lower	12 to 14
2215G01590 and lower	13 to 14
2215G01840 and lower	14

CHANGE 1 For serial numbers 2123G00100 and lower.

In Table 6–3. Replaceable Parts, make the following changes to the parts lists stated:
Frame list: Delete MP34
A12 list: Delete A12R7

Change associated schematic and component layout diagrams as necessary.

CHANGE 2 For serial numbers 2123G00150 and lower.

In Table 6–3. Replaceable Parts, make the following changes to the parts lists stated:
Frame list: Delete MP5, MP6 and MP7
A3 list: Delete A3C16

Change associated schematic and component layout diagrams as necessary.

CHANGE 3 For serial numbers 2123G00165 and lower.

In Table 6–3. Replaceable Parts, make the following changes to the parts lists stated:
A 5 list: Add: A5C9 0160–3725 C–F 0.68 μF 100 V
Change A5C8 to: 0160–3376 C–F 3.3 μF 63 V

Change associated schematic and component layout diagrams as necessary.
C9 is connected in parallel to C8.

CHANGE 4 For serial numbers 2123G00235 and lower.

In Table 6–3. Replaceable Parts, make the following changes to the parts lists stated:
Frame list: Change MP42 to MP42 (X4) 0340–0451 INS WASHER

CHANGE 5 For serial numbers 2123G00285 and lower.

In Table 6–3. Replaceable Parts, make the following changes to the parts lists stated:
A3 list: Change A3R15 to: 0698–4411 R–F 140 1 % .125 W
Frame list: Delete R1

Change the associated schematic and component layout diagrams as necessary.

CHANGE 6 For serial numbers 2123G00435 and lower

Delete the following from Table 6-3, Replaceable Parts, and from the A6 component layout:

A6R49, A6R50, A6R51, A6R52 and A6Q3

Add the following to Table 6-3, Replaceable Parts, and to the A6 component layout:

A6R7 0698-7260 R-F 10K

On the A6 component layout, A7 is located directly below R5.

Change the associated schematic as shown in the Figure 7-1.

Delete any reference to A6R50 in the Adjustment Procedure (page 5-1, para 5-2, step 3; page 5-4,para 5-4,step 5; page 5-5, step 30)

CHANGE 7 For serial numbers 2215G00485 and lower

Delete A8L2 from parts list, component layout and schematic.

CHANGE 8 For serial numbers 2215G00535 and lower

Change Table 6-3, Replaceable Parts to read:

A8C8,C9	0160-3878	C-F .001UF 100V
A8L1	9170-0894	CORE MAGNETIC

CHANGE 9 For serial numbers 2215G00715 and lower

Change Table 6-3, Replaceable Parts to read:

A8Q6	1854-0637	XSTR SI 2219A

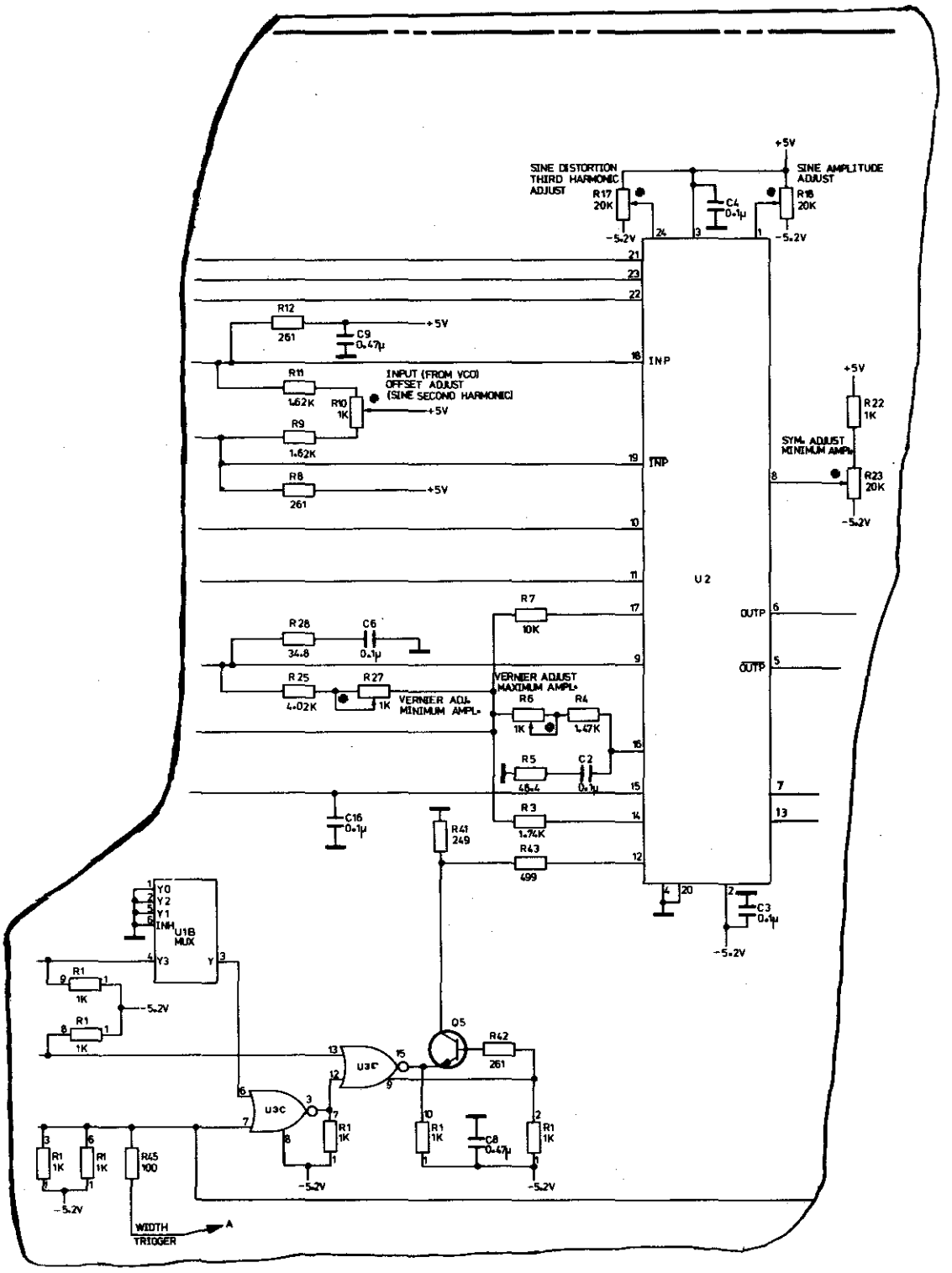
SINE DISTORTION THIRD HARMONIC ADJUST
R17 20K
-5.2V
+5V
C4 0.1µ
SINE AMPLITUDE ADJUST
R18 20K
-5.2V
R12 261
C9 0.47µ
+5V
INP
R11 1.62K
INPUT (FROM VCO) OFFSET ADJUST (SINE SECOND HARMONIC)
R10 1K
+5V
R9 1.62K
INP
R8 261
+5V
+5V
R22 1K
SYM. ADJUST MINIMUM AMPL.
R23 20K
-5.2V
U2
R7 10K
OUTP
OUTP
R28 34.8
C6 0.1µ
R25 4.02K
R27 1K
VERNIER ADJ. MINIMUM AMPL.
VERNIER ADJUST MAXIMUM AMPL.
R6 1K
R4 1.47K
R5 48.4
C2 0.1µ
R3 1.74K
R43 499
C16 0.1µ
R41 249
C3 0.1µ
-5.2V
Y0
Y2
Y1
INH
U1B MUX
Y3
Y
R1 1K
-5.2V
R1 1K
Q5
R42 261
U3C
U3C
R1 1K
R1 1K
C8 0.47µ
R1 1K
-5.2V
-5.2V
R1 1K
R1 1K
R45 100
-5.2V
WIDTH TRIGGER
A

Figure 7-1

CHANGE 10 For serial numbers 2215G00835 and lower

Change Table 6-3, Replaceable Parts to read:

A6Q1 5180-2409 XSTR SEL PAIR

Delete the following components from the parts list, component layout and schematic:

A6R53*, A6RT1*

CHANGE 11 For serial numbers 2215G01075 and lower

Delete the following components from the parts list, component layout and schematic:

A7C9, A7C10, A7R3, A7R4 and A7U2

On Service Sheet 4, U1E pin1 is connected to U8C/U9C pin 10, and U1D pin 8 is connected to U8A/U9A pin 13

CHANGE 12 For serial numbers 2215G01540 and lower

Change Table 6-3, Replaceable Parts to read:

A6C10 0160-0174 C-F 0.47UF 25VCER

CHANGE 13 For serial numbers 2215G01590 and lower

Change Table 6-3, Replaceable Parts to read:

A5R9 0757-0278 R-F 1.78K

CHANGE 14 For serial numbers 2215G01840 and lower

Change Table 6-3,Replaceable Parts to read:

A7CR1 1901-0731 DIO-PWR 400V 1A

SECTION VIII
SERVICE

8–1 INTRODUCTION

8–2 This section contains the information to service the HP Model 8111A. The information includes theory of operation, troubleshooting, schematics, component layouts and block diagram.

8–3 The schematics and component layouts are organized as 'Service Sheets' which are identified by a large number within a square in the lower corners. A table relating these Service Sheets to board assemblies is given in Table 8–1. Schematic diagram symbols are given in Table 8–3.

Table 8–1. Index of Assemblies

Assembly	Service Sheet
A1 (A21) Mother Board	1
A2 Regulator Board	2
A3 Burst Board (Opt. 001)	6
A4 Width Generator Board	9
A5 VCO Board	8
A6 Shaper Board	10
A7 Control Board	4
A8 Output Board	11
A9 Burst No. Control Board (Opt. 001)	7
A10 (A30) Display Board	5
A11 (A31) Upper Switch Board	3
A12 Lower Switch Board	3
A13 Switch and Fuse Board	2

NOTE: The numbers given in brackets e.g. (A21) refer to the boards as used in Option 001 (Burst) instruments where they differ from the standard type.

8–4 SAFETY CONSIDERATIONS

8–5 This section contains warnings and cautions that must be followed for your protection and to avoid damage to the equipment:

WARNING

Maintenance described herein is performed with power supplied to the instrument, and protective covers removed. Such maintenance should be performed only by service-trained personnel who are aware of the hazards involved (for example, fire and electrical shock). Where maintenance can be performed without power applied, the power should be removed.
When servicing is complete, the After Service Safety Check must be performed.

8–6 AFTER SERVICE SAFETY CHECK

8–7 Execute the following checks when servicing is completed.

8–8 Disconnect power cord from line. Visually inspect interior of instrument for any sign of abnormal internally generated heat, such as discolored printed circuit boards or components, damaged insulation, or evidence of arcing. Determine cause and remedy.

8–9 Check cabinet/ground pin continuity in accordance with IEC/VDE. Flex the power cord while making the measurement to detect any intermittent discontinuity. Check internal ground connections on boards and frame. Also check resistance of any front or rear panel ground terminals marked ⏚ .

8–10 Check cabinet/line isolation in accordance with IEC/VDE. Replace any component which results in a failure or refer to production Memo or Service Note issued by product division for alternate action.

8–11 Check line fuse to verify that the proper value is installed.

8–12 Check that safety covers are installed.

8–13 Check that the coaxial and flat cables are properly connected. Check that all boards are properly fitted and the heatsink connections between the Output board A8 and front frame member are secure.

8–14 Inform Hewlett-Packard (internally, the responsible product division) of any repeated failures in the above tests or any other safety features.

8–15 SERVICE BLOCKS (THEORY/ TROUBLESHOOTING)

8–16 The theory of operation and troubleshooting

is divided into Service Blocks, each Service Block corresponding to a complete function within the 8111A, except Service Block 1 which deals with overall instrument troubleshooting, including a detailed block diagram of all HP 8111A functions. The purpose of the general instrument troubleshooting is to provide a fast means of isolating a fault down to a function. The Serviceman should then proceed to the Service Block providing detailed theory of operation and troubleshooting hints for that function. A table relating function to Service Block is given in Table 8–2.

Table 8–2. Index to Service Blocks

Service Block	Function/Boards
1	Problem Area Identification
2	Power Supply
3	Switch Boards
4	Control Boards
5	Display Board
6	Burst Boards
7	VCO Board
8	Width Board
9	Shaper Board
10	Output Amplifier Board

8–17 Tables and Figures within each Service Block are given three-digit codes e.g. Figure 8–3–1. The first digit refers to the Manual Section (8), the second digit to the Service Block and the third to the Figure number, e.g. Figure 8–3–1 means Section 8, Service Block 3, Figure 1.

8–18 IC INFORMATION

8–19 IC information is given following Table 8–4. This information is in HP Part Number sequence and provides such details as pin assignments, truth tables and timing diagrams for individual IC's.

Table 8–3. Schematic Diagram Notes (1 of 2)

The following symbols conform, as far as possible, with ANSI Y 32.2, IEEE No. 315 and ANSI Y32.14 (for the logic symbols). These standards should be consulted when further informations is required.

General

Units — Resistance values are in ohms, capacitance values in microfarads and inductance values in microhenries unless otherwise noted !

P/O — Part of

✳ — Asterisk denotes a factory selected value. The value shown is the nominal value.

Encloses front panel nomenclature.

Encloses rear panel nomenclature.

Heavy line indicates signal path.

Heavy dashed line indicates primary feedback path.

947 — Wire colour code. Same as resistor colour code. First number is wire body colour.

Wire or plug used as link.

Test point in a circuit. Point may/may not be identified on P.C. board.

Used with trimmer potentiometers or capacitors to indicate screwdriver adjustment.

Direct connection to earth.

Ground connection to instrument chassis or frame.

Used when a number of common-return connections are at the same potential. If there is more than one such system in the same circuit, numbers are written in the triangles so that all connections with the same potential have the same number.

xV — Specific potential difference with respect to a potential reference level, eg. +10 V

Schematic Referencing

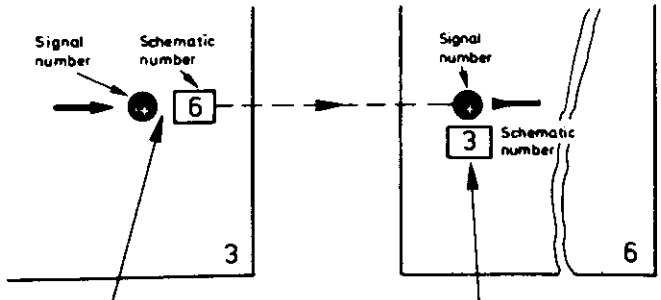

These references on a signal leaving a schematic diagram indicate the signal destination. The circle contains the signal number and the square contains the number of the schematic to which that signal goes.

These references on a signal entering a schematic diagram indicate the signal origin. The circle contains the signal number and the square contains the number of the schematic to which that signal originates.

Components

Normally open toggle switch. Circles (O) are used for the contacts to indicate a locking type switch.

Spring return, 2-position transfer switch. Triangle (▲) are used for the contacts to indicate a non-locking type switch.

2-position, 2-pole slide switch.

Air cored inductor.

Air cored transformer. The dot (●) is used, when necessary, to indicate instantaneous polarity.

Iron core

Ferrite core

bead — Ferrite bead

Varactor diode

Multi-junction diode

Diode

Zener diode

Schottky diode

Light Emitting Diode (LED)

Photodiode

Fuse

Neon

Filament lamp

Table 8–3. Schematic Diagram Notes (2 of 2)

Terminals and Connectors

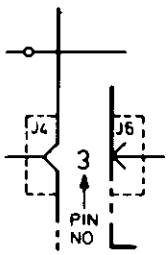

Soldered connection.

Example of fixed male and female connectors with plug and socket and contact designators, eg. P.C. board edge connector and socket.

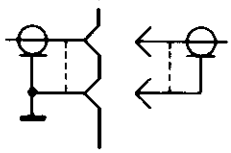

example of bulkhead mounted coaxial socket with free coaxial plug and cable.

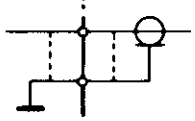

example of coaxial cable with termination soldered to P.C. board.

Analog Symbols

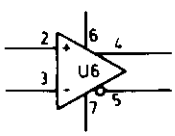

Operational amplifier

Voltage source

Current source

Logic Symbols

Positive logic is used unless otherwise specified.

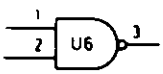

2-input NAND gate

open collector

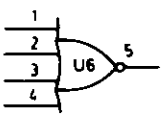

4-input NOR gate

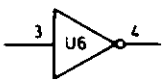

Inverter

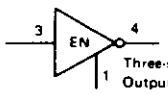

Three-state device. Output is high-impedance when EN is false, irrespective of input. Normal operation when EN is true.

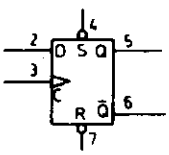

Flip-flop

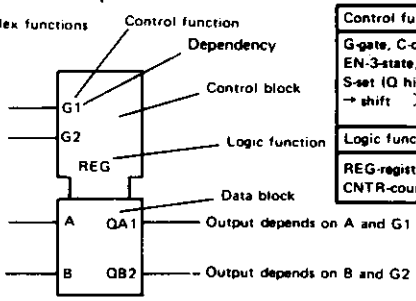

Control functions:
G-gate, C-clock EN-3-state, R-reset (Q low) S-set (Q high), ↑ (↓)-count up (down) → shift > edge-triggered.
Logic functions:
REG-register, SEL-selector CNTR-counter, (DE)MUX-(de)multiplexer

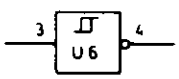

Schmitt trigger

Wired AND connection

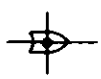

Wired OR connection

1820-0693 DUAL D-TYPE POSITIVE-EDGE-TRIGGERED FLIP-FLOPS WITH PRESET AND CLEAR (S74)

FUNCTION TABLE

INPUTS				OUTPUTS	
PRESET	CLEAR	CLOCK	D	Q	$\bar{Q}$
L	H	X	X	H	L
H	L	X	X	L	H
L	L	X	X	H*	H*
H	H	↑	H	H	L
H	H	↑	L	L	H
H	H	L	X	Q_0	$\bar{Q}_0$

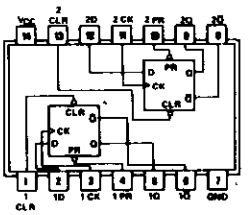

1820-0802 QUAD 2-INPUT NOR GATE (ECL)

POSITIVE LOGIC NEGATIVE LOGIC

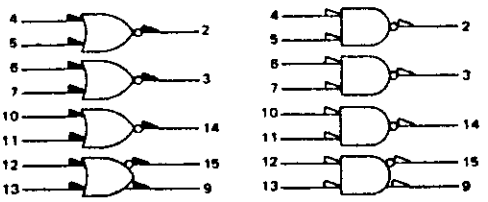

V_{CC1} = Pin 1
V_{CC2} = Pin 16
V_{EE} = Pin 8

1820-0817 DUAL TYPE D MASTER-SLAVE FLIP-FLOP (ECL)

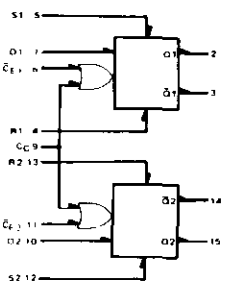

CLOCKED TRUTH TABLE

C	D	Q_{n+1}
L	⊘	Q_n
H	L	L
H	H	H

⊘ Don't Care
C = C_E + C_C
▲ Clock H is a clock transition from a low to a high state

V_{CC1} = Pin 1
V_{CC2} = Pin 16
V_{EE} = Pin 8

R S TRUTH TABLE

R	S	Q_{n+1}
L	L	Q_n
L	H	H
H	L	L
H	H	N.D.

N.D. - Not Defined

1820-0931 PRESETTABLE BINARY/DECADE UP/DOWN COUNTER

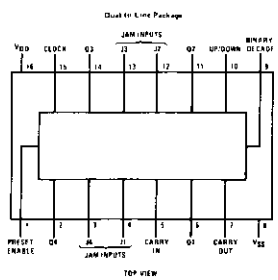

Logic Waveforms

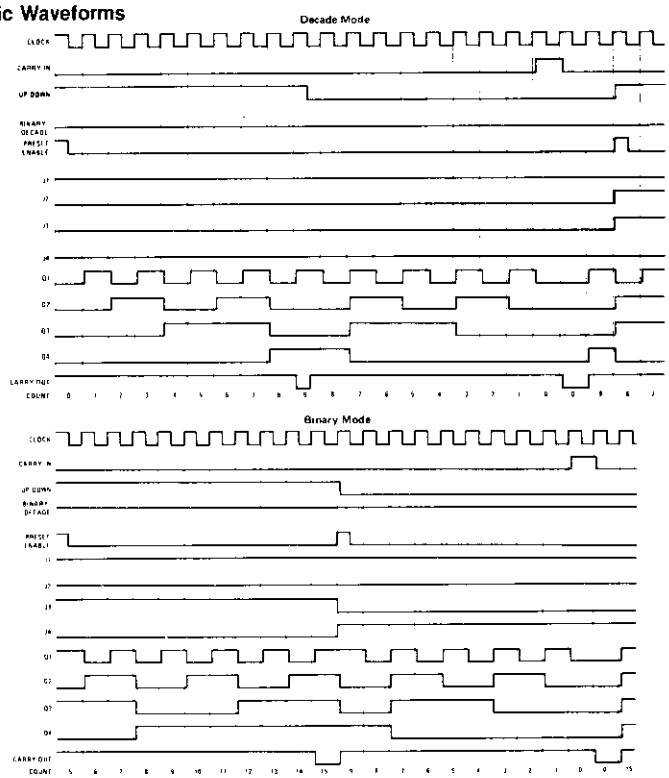

1820-1052 QUAD ECL TO TTL CONVERTER

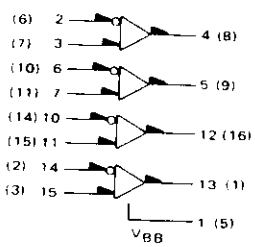

Gnd = Pin 16 (4)
V_{CC} (+5.0 Vdc) = Pin 9 (13)
V_{EE} (−5.2 Vdc) = Pin 8 (12)

1820-1112 DUAL D-TYPE POSITIVE-EDGE-TRIGGERED FLIP-FLOPS WITH PRESET AND CLEAR (LS74)

FUNCTION TABLE

INPUTS				OUTPUTS	
PRESET	CLEAR	CLOCK	D	Q	$\bar{Q}$
L	H	X	X	H	L
H	L	X	X	L	H
L	L	X	X	H*	H*
H	H	↑	H	H	L
H	H	↑	L	L	H
H	H	L	X	Q_0	$\bar{Q}_0$

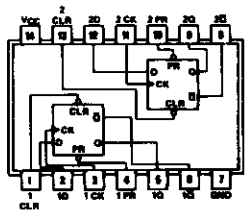

1820-1194 SYNCHRONOUS 4 BIT UP/DOWN COUNTER (DUAL CLOCK WITH CLEAR)

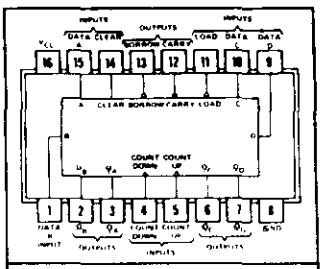

logic: Low input to load sets $Q_A = A$, $Q_B = B$, $Q_C = C$, and $Q_D = D$

typical clear, load, and count sequences

Illustrated below is the following sequence:

1. Clear outputs to zero.
2. Load (preset) to binary thirteen.
3. Count up to fourteen, fifteen, carry, zero, one, and two.
4. Count down to one, zero, borrow, fifteen, fourteen, and thirteen.

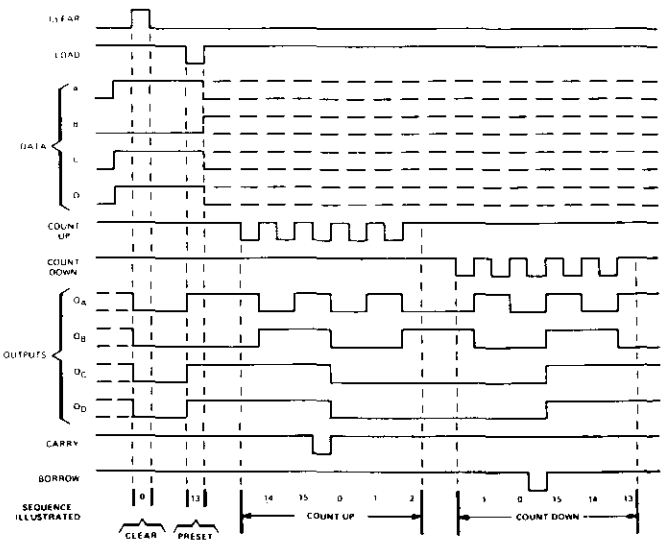

NOTES: A. Clear overrides load, data, and count inputs.
B. When counting up, count-down input must be high, when counting down, count-up input must be high.

1820-1216 3-BIT BINARY DECODER/DEMULTIPLEXER

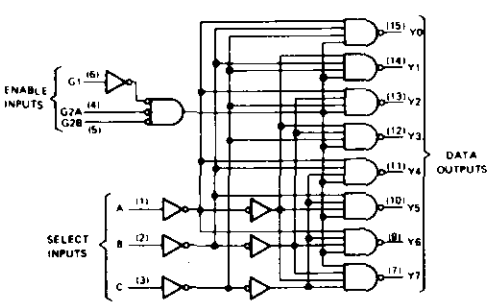

FUNCTION TABLE

INPUTS					OUTPUTS							
ENABLE		SELECT										
G1	G2*	C	B	A	Y0	Y1	Y2	Y3	Y4	Y5	Y6	Y7
X	H	X	X	X	H	H	H	H	H	H	H	H
L	X	X	X	X	H	H	H	H	H	H	H	H
H	L	L	L	L	L	H	H	H	H	H	H	H
H	L	L	L	H	H	L	H	H	H	H	H	H
H	L	L	H	L	H	H	L	H	H	H	H	H
H	L	L	H	H	H	H	H	L	H	H	H	H
H	L	H	L	L	H	H	H	H	L	H	H	H
H	L	H	L	H	H	H	H	H	H	L	H	H
H	L	H	H	L	H	H	H	H	H	H	L	H
H	L	H	H	H	H	H	H	H	H	H	H	L

*G2 = G2A + G2B
H = high level, L = low level, X = irrelevant

1820-1277 SYNCHRONOUS 4-BIT DECADE UP/DOWN COUNTERS (DUAL CLOCK WITH CLEAR)

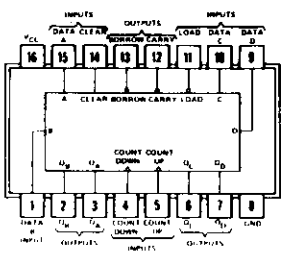

Illustrated below is the following sequence:

1. Clear outputs to zero.
2. Load (preset) to BCD seven.
3. Count up to eight, nine, carry, zero, one, and two.
4. Count down to one, zero, borrow, nine, eight, and seven.

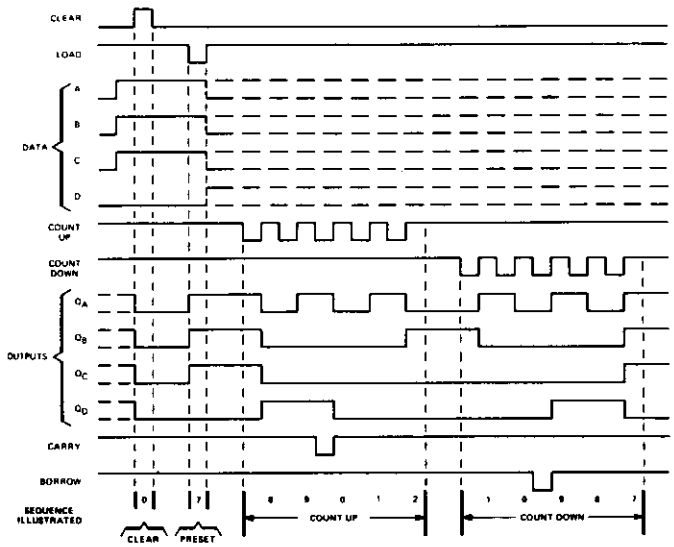

NOTES: A. Clear overrides load, data, and count inputs.
B. When counting up, count-down input must be high; when counting down, count-up input must be high.

1820-1423 DUAL RETRIGGERABLE MONOSTABLE MULTIVIBRATORS WITH CLEAR

FUNCTION TABLE

INPUTS			OUTPUTS	
CLEAR	A	B	Q	$\bar{Q}$
L	X	X	L	H
X	H	X	L	H
X	X	L	L	H
H	L	↑	⎍	⎏
H	↓	H	⎍	⎏
↑	L	H	⎍	⎏

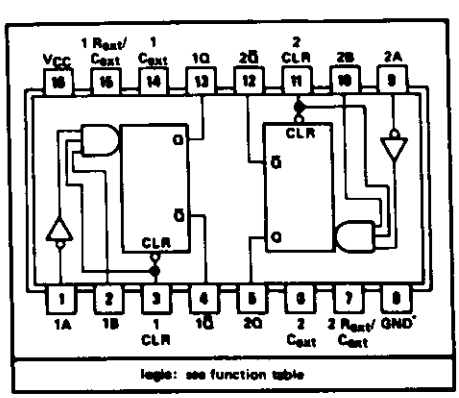

1820-1454 SYNCHRONOUS DECADE UP/DOWN COUNTER

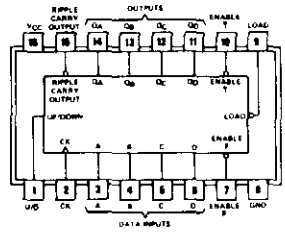

typical load, count, and inhibit sequences

Illustrated below is the following sequence.

1. Load (preset) to BCD seven
2. Count up to eight, nine (maximum), zero, one, and two
3. Inhibit
4. Count down to one, zero (minimum), nine, eight, and seven

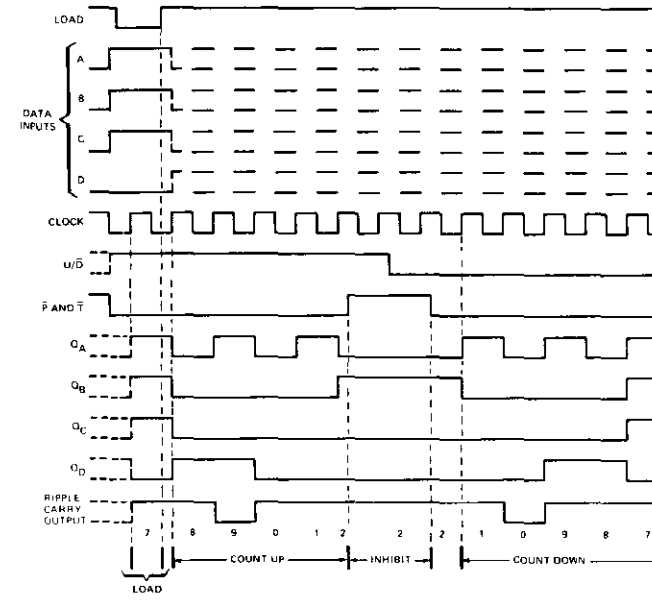

1820-1470 QUAD 2 TO 1-LINE DATA SELECTORS/MULTIPLEXERS

Inputs				Output
Strobe	Select	A	B	Y
H	X	X	X	L
L	L	L	X	L
L	L	H	X	H
L	H	X	L	L
L	H	X	H	H

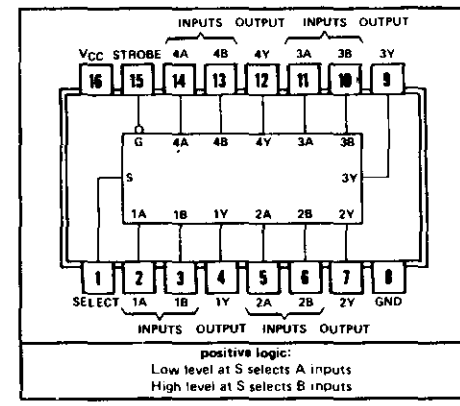

1820-1508 DECADE COUNTER/DIVIDER WITH 10 DECODED OUTPUTS

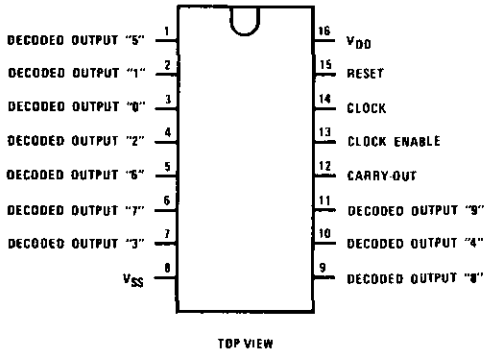

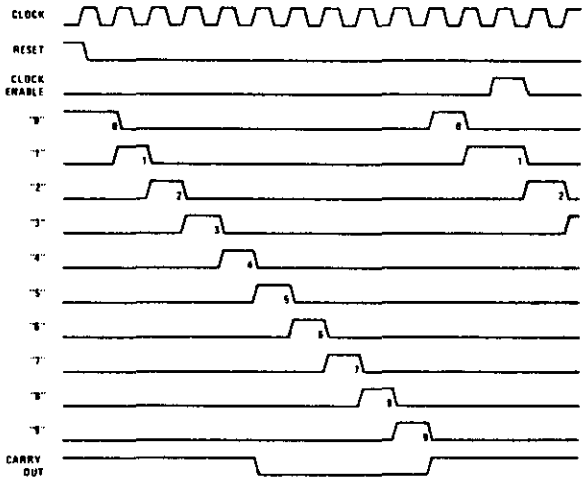

1820-1546 DUAL 4 TO 1-LINE ANALOG MULTIPLEXERS

Inputs			Channel
INH	S1	S0	turned on
H	X	X	None
L	L	L	0
L	L	H	1
L	H	L	2
L	H	H	3

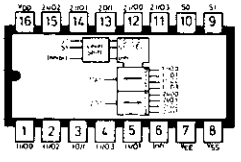

1820-1964 DUAL JK FLIP-FLOP

TRUTH TABLE

INPUTS						OUTPUTS*	
C†	J	K	S	R	Q_n‡	Q_{n+1}	$\overline{Q_{n+1}}$
↑	1	X	0	0	0	1	0
↑	X	0	0	0	1	1	0
↑	0	X	0	0	0	0	1
↑	X	1	0	0	1	0	1
↓	X	X	0	0	X	Q_n	$\overline{Q_n}$
X	X	X	1	0	X	1	0
X	X	X	0	1	X	0	1
X	X	X	1	1	X	1	1

No Change

X = Don't Care
† = Level Change
‡ = Present State
* = Next State

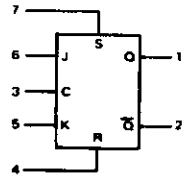

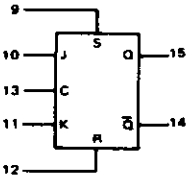

V_{DD} = Pin 16
V_{SS} = Pin 8

1820-2014 HEX INVERTER

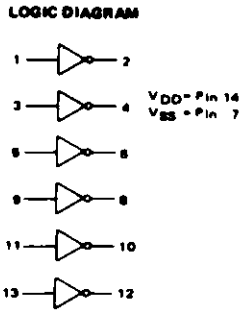

1826-0501 TRIPLE 2 TO 1-LINE ANALOG MULTIPLEXER

Inputs		Channel
INH	S	turned on
H	X	None
L	L	0
L	H	1

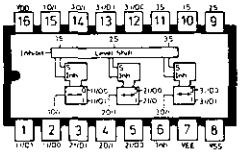

1826-0876 3 1/2DIGIT A/D CONVERTER

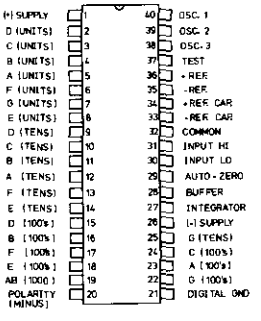

1826-0923 SHAPER/VERNIER IC

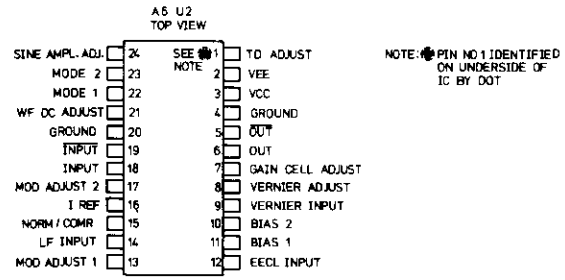

1826-0955 TRIANGLE/SLOPE GENERATOR IC

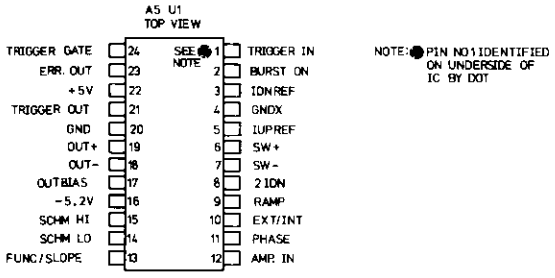

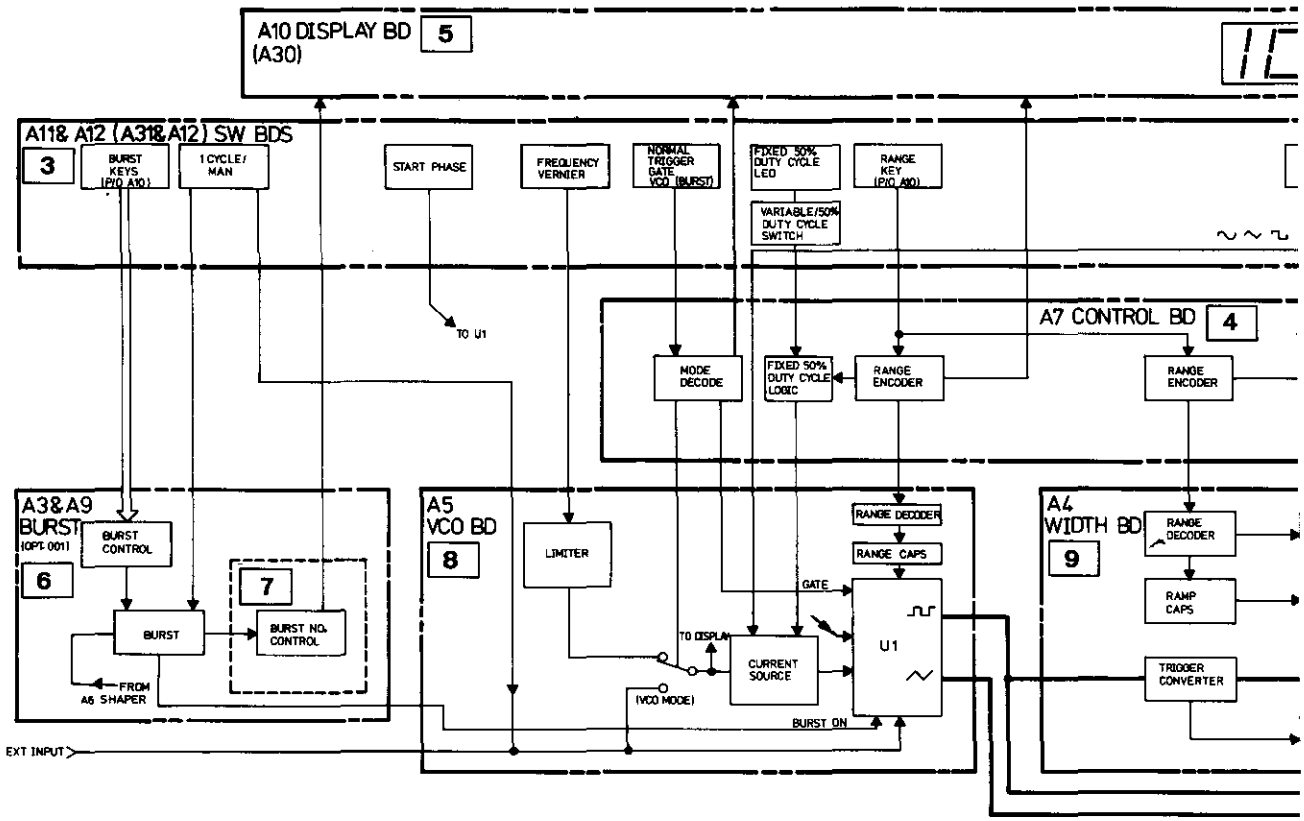

NOTE: BOARD NUMBERS IN BRACKETS
eg:(A30) INDICATE DIFFERENCES
FOR OPTION 001 (BURST) INSTRUMENTS.
NUMBERS WITHIN RECTANGLES eg. 6
ARE SCHEMATIC IDENTIFIERS

Figure 8–1–1. 8111A Block Diagram, Option 001 (Burst) Details Included

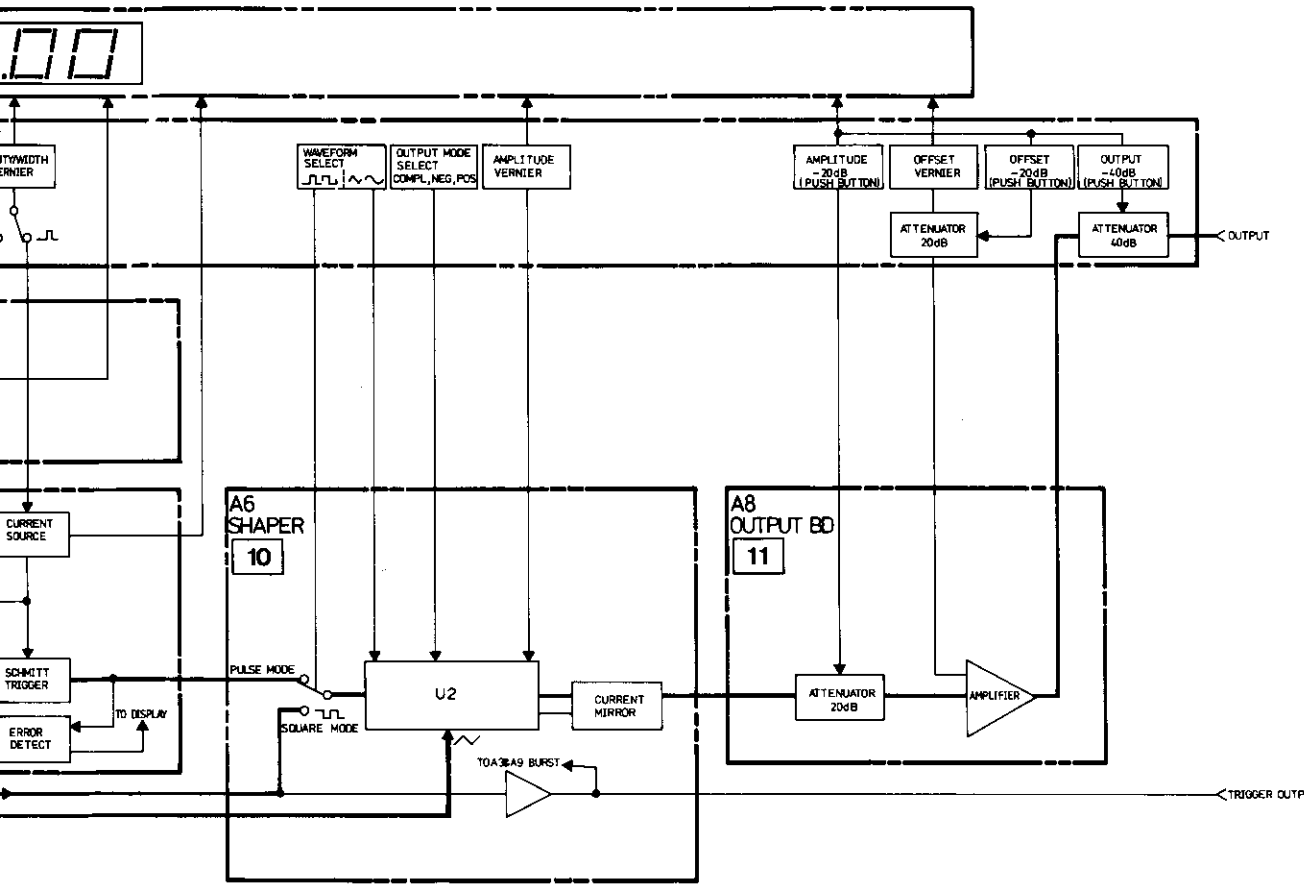
WAVEFORM SELECT
OUTPUT MODE SELECT COMPL, NEG, POS
AMPLITUDE VERNIER
AMPLITUDE -20dB (PUSH BUTTON)
OFFSET VERNIER
OFFSET -20dB (PUSH BUTTON)
OUTPUT -40dB (PUSH BUTTON)
ATTENUATOR 20dB
ATTENUATOR 40dB
OUTPUT
CURRENT SOURCE
SCHMITT TRIGGER
ERROR DETECT
TO DISPLAY
A6 SHAPER
10
PULSE MODE
SQUARE MODE
U2
CURRENT MIRROR
TO A3 & A9 BURST
A8 OUTPUT BD
11
ATTENUATOR 20dB
AMPLIFIER
TRIGGER OUTPUT

SERVICE BLOCK 1
PROBLEM AREA IDENTIFICATION

General

The purpose of this Service Block is to present a brief overview of the instrument circuits operation which, when combined with the Troubleshooting Tree (Figure 8–1–3), will assist in quickly identifying which Service Block(s) should be referred to. Once the actual board or circuit at fault has been identified, reference to the appropriate Service Block will provide detailed circuit operational theory and comprehensive trouble-shooting data. Details of the overall 811A circuits operation and the function of individual boards follows, reference should also be made as necessary to Figure 8–1–1 and the condensed block diagram – Figure 8–1–2. Where possible, the board descriptions are given in the same order as they appear in the two block diagrams i.e. in their logical priority.

Board/Signal Flow Description (Standard 8111A)

In all operating and waveform modes except External Trigger/Pulse, board A5 (VCO) functions as a rate generator with the rate (or frequency) being determined either by front panel settings or by an externally applied control voltage. For the one exception stated, A5 serves only as a Schmitt trigger to ensure that the incoming trigger signal is compatible with level shifter of A6 (Shaper) and the trigger converter circuit of A4 (Width).

Two output signals are produced by A5 U1 – triangular and square waveforms, the triangular waveform is input to A6 (Shaper) where it is further processed by A6 U2 to form a sinusoidal function if necessary and also given the required ("front panel") output mode and amplitude settings. If a squarewave is required then the "square output" from A5 U1 is utilized and processed by A6 U2. In pulse mode, the "square output" from A5 U1 is input to A4, given the required width characteristics (determined by front panel settings) and then output to A6 where it is processed as necessary. In all cases, the output from A6 is input to A8 (Output) for offset control and amplitude, output and offset attenuation.

A7 (Control) serves basically as an interface between A11, A12, A5 and A4. A3, A9, A6 and A8 interface directly with the front panel controls and A11, A12.

Parameter and error display is by board A10 with parameter display being via an A–D converter (analogue voltages derived from vernier control settings) and application of appropriate scaling factors via A12U12 depending on the chosen parameter.

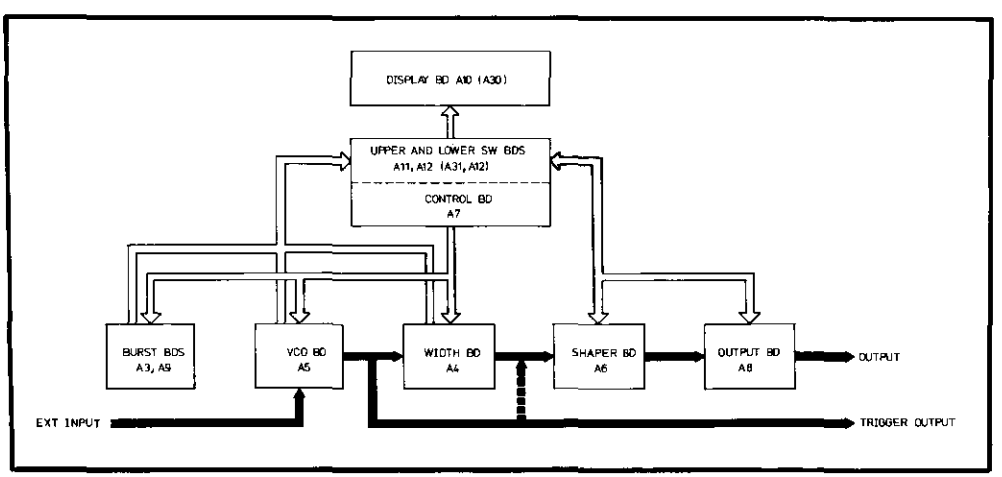

Figure 8–1–2. 8111A Condensed Block Diagram

Differences for Option 001 - Burst instruments

In Option 001 (Burst) instruments a trigger signal, either externally generated or via the Manual/1 Cycle switch, is required to initially activate A5U1. It is then maintained active by a signal (BURST ON) from A3.
The operating frequency and all other settings are made as for the standard 8111A, (via front panel settings and A11, A12 and A7 Control). The output is disabled by the BURST ON signal going low. The burst number, set by the Burst rocker switches, keeps the signal active high until the required output count is reached, it is also used by A9 to control the display value of A10.

TROUBLESHOOTING

The Troubleshooting Tree, Figure 8–1–3, should be referred to when necessary since it shows the connection between possible faults and related boards. While it will be found to be correct for all the basic fault conditions or symptoms, it cannot cover all possible situations.

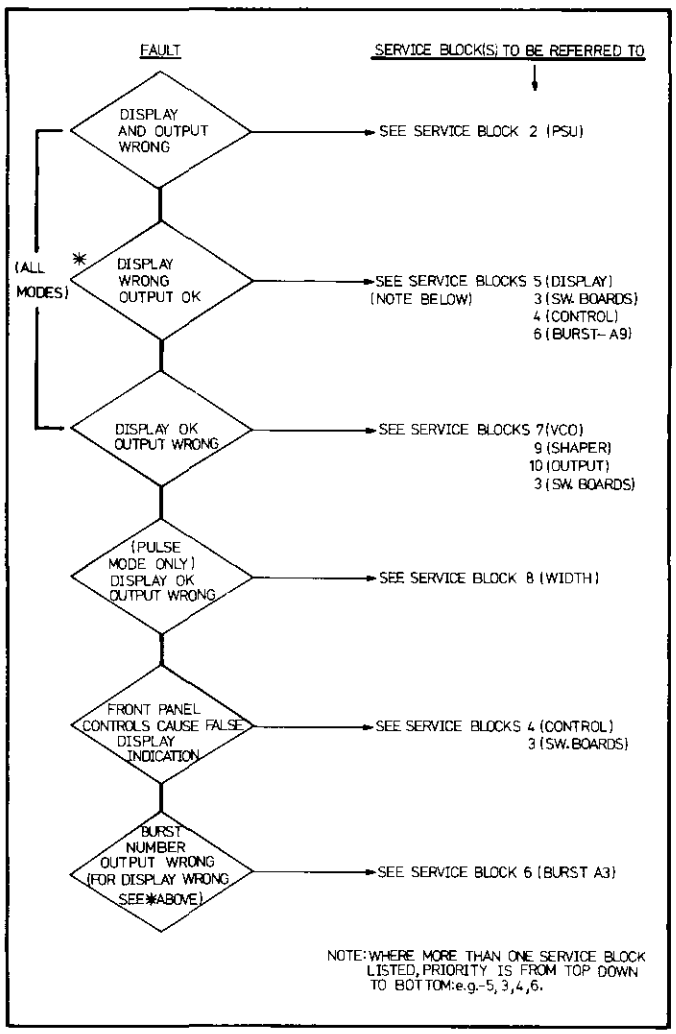

Figure 8–1–3. Troubleshooting Tree

A1 BD AY MOTHERBOARD 08111-66501 STANDARD
A21 " " " 08111-66521 OPTION 001

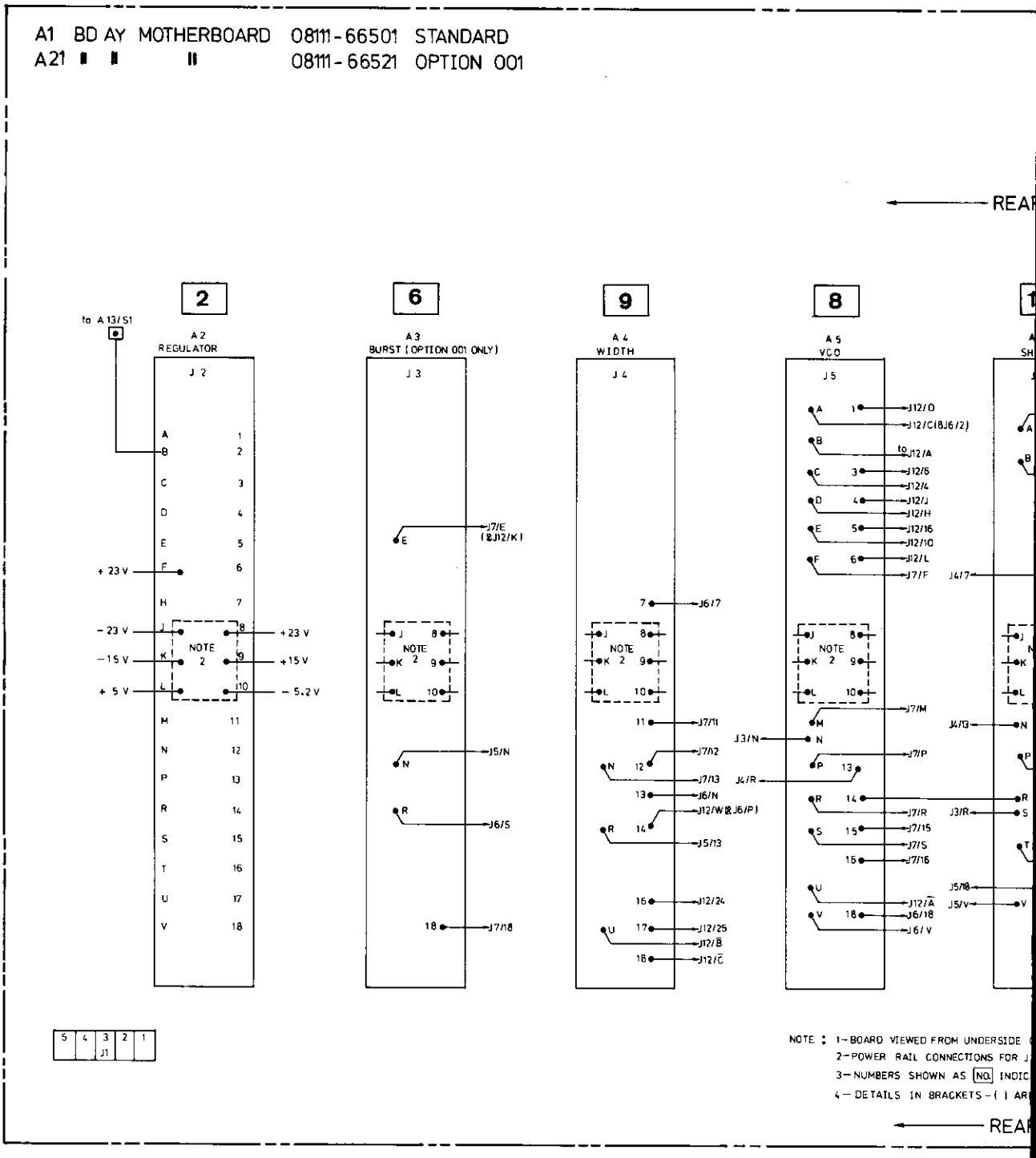

1

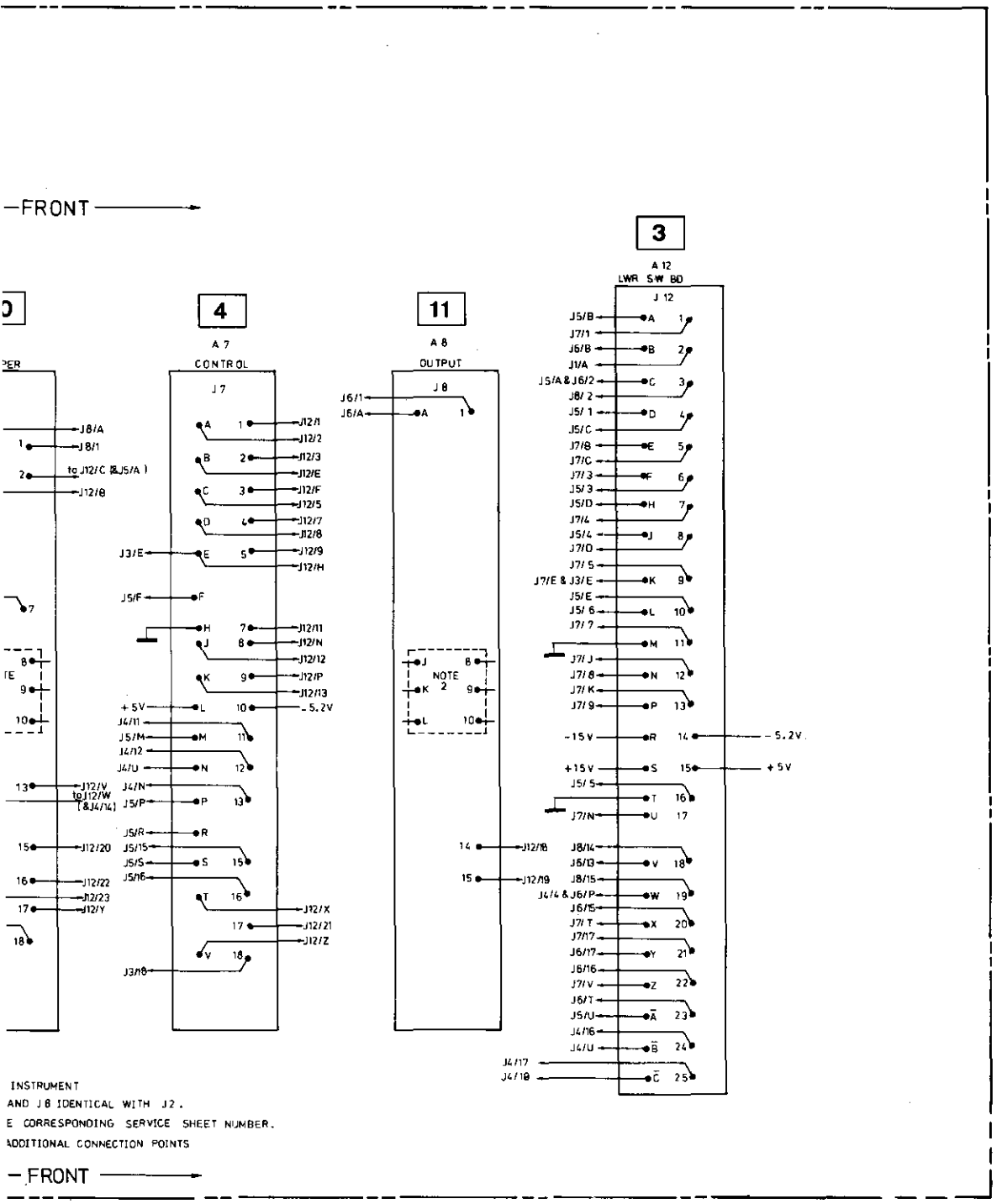
FRONT
3
A 12
LWR SW BD
J 12
4
A 7
CONTROL
J 7
11
A 8
OUTPUT
J 8
NOTE 2
J8/A
J8/1
to J12/C (&J5/A)
J12/8
J12/1
J12/2
J12/3
J12/E
J12/F
J12/5
J12/7
J12/8
J12/9
J12/H
J3/E
J5/F
J12/11
J12/N
J12/12
J12/P
J12/13
+5V
-5.2V
J4/11
J5/M
J4/12
J4/U
J4/N
J5/P
J12/V
to J12/W
[&J4/14]
J5/R
J5/15
J5/S
J5/16
J12/20
J12/22
J12/23
J12/Y
J12/X
J12/21
J12/Z
J3/18
J6/1
J6/A
J12/18
J12/19
J5/B
J7/1
J6/B
J1/A
J5/A & J6/2
J8/2
J5/1
J5/C
J7/8
J7/C
J7/3
J5/3
J5/D
J7/4
J5/4
J7/D
J7/5
J7/E & J3/E
J5/E
J5/6
J7/7
J7/J
J7/8
J7/K
J7/9
-15V
+15V
J5/5
J7/N
J8/14
J6/13
J8/15
J4/4 & J6/P
J6/15
J7/T
J7/17
J6/17
J6/16
J7/V
J6/T
J5/U
J4/16
J4/U
J4/17
J4/18
-5.2V
+5V
INSTRUMENT
AND J8 IDENTICAL WITH J2.
E CORRESPONDING SERVICE SHEET NUMBER.
ADDITIONAL CONNECTION POINTS
FRONT

A13 BD AY FUSE & SWITCH 08111-66513

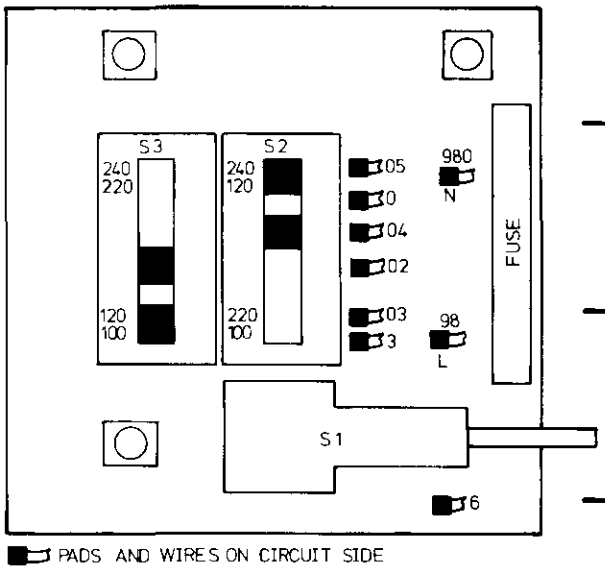

P/O A1 BD AY MOTHER 08111-66501

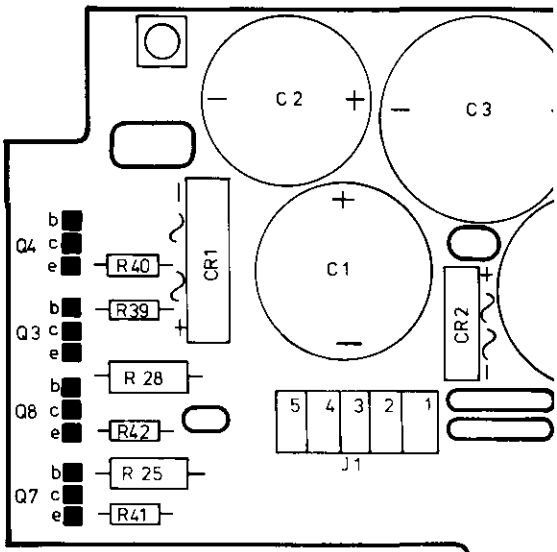

REF DESIG	GRID LOC
S1	B/C3
S2	B2
S3	B2

REF DESIG	GRID LOC	REF DESIG	GRID LOC
C1	G2	R39	E3
C2	F2	R40	E2
C3	G2	R41	E4
C4	H2	R42	E3
CR1	F2	Q3	E3
CR2	G3	Q4	E2
J1	G3	Q7	E4
R12	H4	Q8	E3
R13	H4		
R20	H5		
R21	H4		
R25	E3		
R28	E3		
R31	H5		
R32	H5		

2

D | E | F | G | H | I | J | K | L

513

P/O A1 BD AY MOTHER 08111-66501

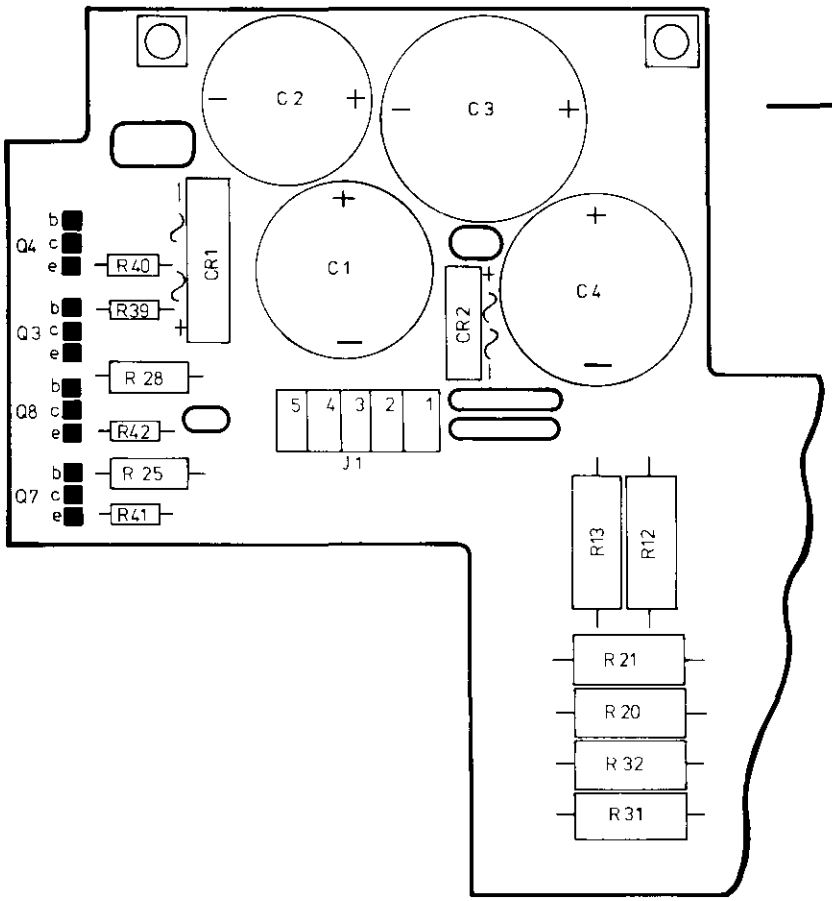

A2 BD AY REGULATOR 08111-

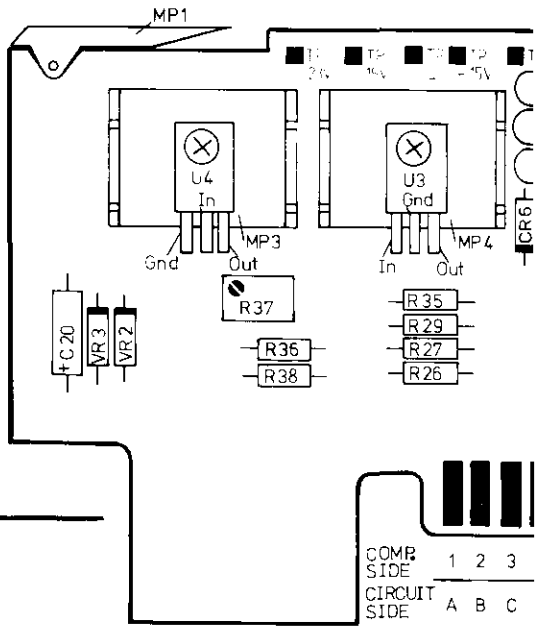

REF DESIG	GRID LOC	REF DESIG	GRID LOC
C1	G2	R39	E3
C2	F2	R40	E2
C3	G2	R41	E4
C4	H2	R42	E3
CR1	F2	Q3	E3
CR2	G3	Q4	E2
J1	G3	Q7	E4
R12	H4	Q8	E3
R13	H4		
R20	H5		
R21	H4		
R25	E3		
R28	E3		
R31	H5		
R32	H5		

REF DESIG	GRID LOC	REF DESIG	GRID LOC
C5	Q2	CR7	M2
C6	Q2	CR8	M2
C7	Q3	CR9	Q2
C9	O2	CR10	Q1
C11	M2	CR11	O2
C12	Q3	CR12	O2
C14	M1	CR13	O1
C15	P3	CR14	Q2
C17	M1	Q1	Q2
C18	P3	Q2	Q2
C20	J2	Q5	N2
CR3	O2	Q6	N2/3
CR4	O2	Q9	N2
CR5	N1	Q10	N2
CR6	M2	R1	P2

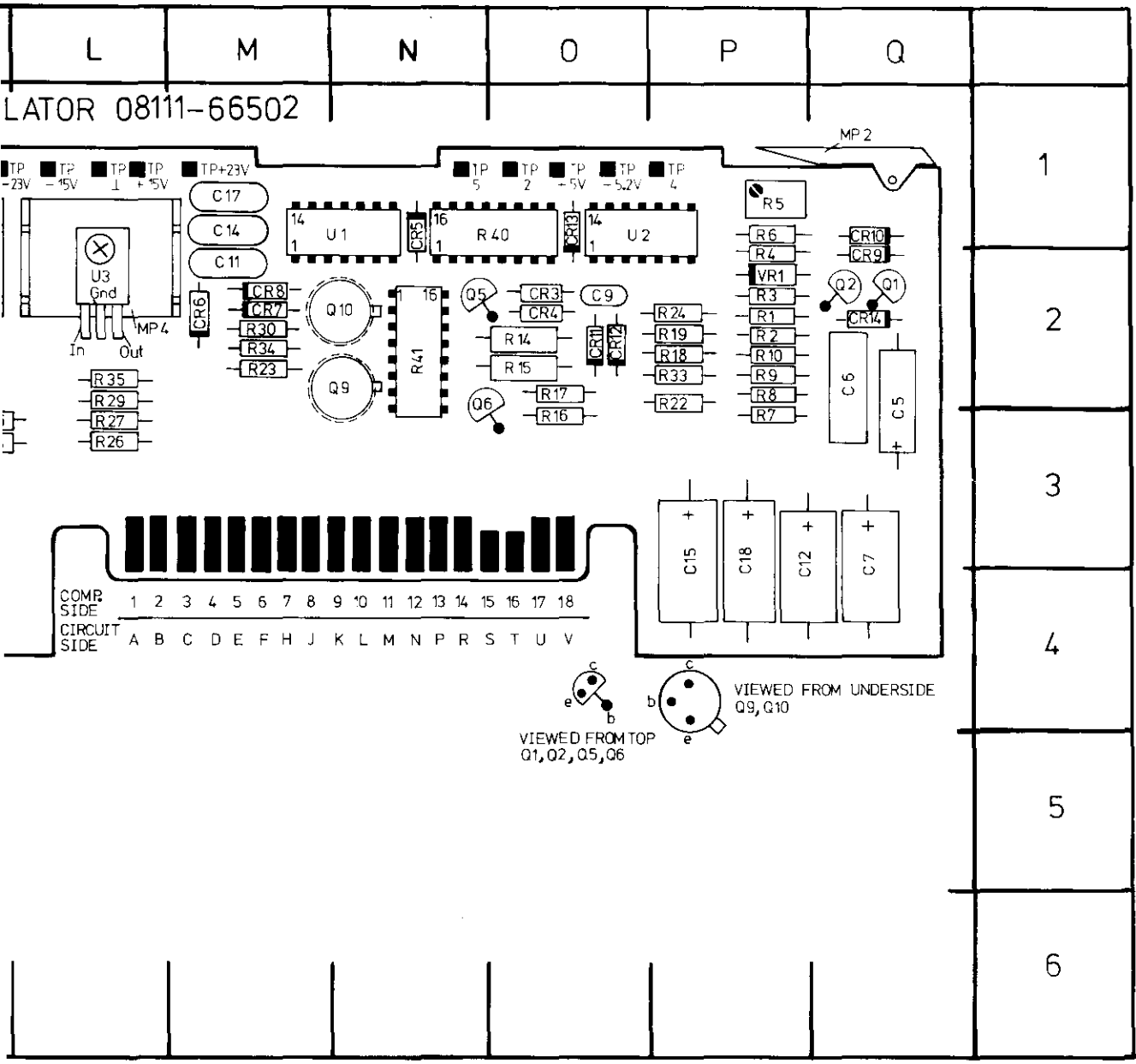

EF ESIG	GRID LOC	REF DESIG	GRID LOC	REF DESIG	GRID LOC	REF DESIG	GRID LOC	REF DESIG	GRID LOC
R7	M2	R2	P2	R22	P2	TP2	O1	VR2	P2
R8	M2	R3	P2	R23	M2	TP4	P1	VR3	J2
R9	Q2	R4	P2	R24	P2	TP5	M1		
R10	Q1	R5	P1	R26	L3	TP+5V	O1		
R11	O2	R6	P1	R27	L3	TP-5,2V	O1		
R12	O2	R7	P3	R29	L2	TPGND	L1		
R13	O1	R8	P2	R30	M2	TP-23V	L1		
R14	Q2	R9	P2	R33	P2	TP+23V	M1		
1	Q2	R10	P2	R34	M2	TP-15V	L1		
2	Q2	R14	O2	R35	L2	TP+15V	L1		
5	N2	R15	O2	R36	K2	U1	N1		
5	N2/3	R16	O2	R37	K2	U2	O1		
9	N2	R17	O2	R38	K2	U3	L2		
10	N2	R18	P2	R40	N1	U4	K2		
1	P2	R19	P2	R41	N2	VR1	P2		

SERVICE BLOCK 2
POWER SUPPLY A1, A2, A13 [2]

THEORY OF OPERATION

General

The 8111A power supply comprises basically a step down transformer, bridge rectifiers, smoothing capacitors and various regulators. The components are distributed over boards – A1, A2 and A13.

The instrument may be operated from 100/120/220 or 240 Vrms single phase supplies. Two line voltage selector switches, A2, S2 and S3, are provided to enable the appropriate local voltage to be used. Operation of these switches causes the correct combination of transformer T1 primary windings to be selected so that the required secondary voltages are produced. These voltages are then rectified, smoothed and regulated to produce the following regulated supplies:

± 23 V, ± 15 V, + 5 V, – 5.2 V

The unregulated ± 23 V rails are used to generate auxiliary ± 15 V supplies and regulated ± 23 V and ± 15 V. The auxiliary supplies (± 15 VR) are derived via zener diodes and are the power source for PSU (Power Supply Unit) regulators and protection circuits. In the event of a PSU shut-down, due to a short circuit for example, the auxiliary supplies ensure that the protection circuits maintain their integrity.

NOTE: References to components in the following paragraphs are always for board A2 unless otherwise indicated.

Reference Voltage

All voltage regulators in this PSU use the same reference voltage (–5.2 V) which is generated by zener diode VR1 and a potential divider.

At instrument switch on the zener diode supply current for the –5.2 V supply comes from the rectified transformer output via CR10, R3, Q2. During normal operation the zener current comes from the regulated –15 V supply via CR9, CR10 is then nonconducting. R2/C5 provides a slow ramp-like rise of the reference voltage and therefore also of the regulated supplies.

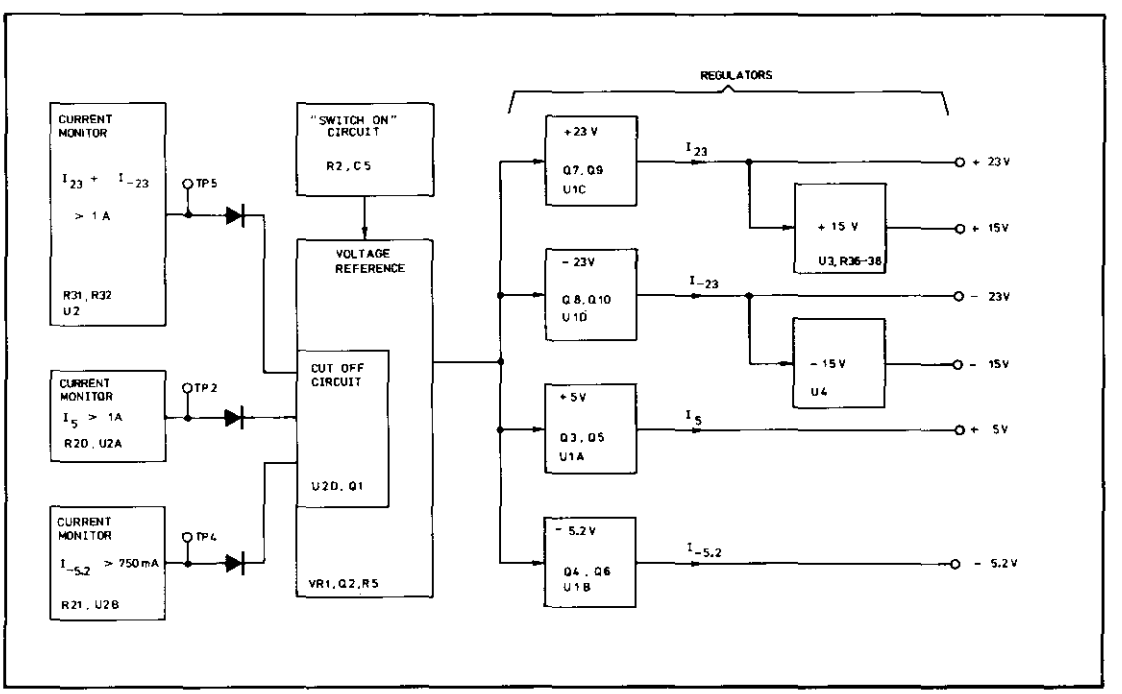

Figure 8–2–1. Simplified Voltage/Current Regulating/Limiting Circuits

± 23 V Supplies

A simplified functional diagram illustrating the operating principle of a positive voltage regulator is shown in Figure 8–2–2. The circuit functions as an inverting amplifier with a high current output. The operating principle of the negative voltage regulator is shown in Figure 8–2–3. The error amplifier compares Vreg with Vref and drives the regulator transistor to zero difference. Excessive output current is detected by R31 and R32 as shown in Figure 8–2–5. The output of the overload amplifier U2C goes high if the voltage drops over R31 and R32 exceed a set level.

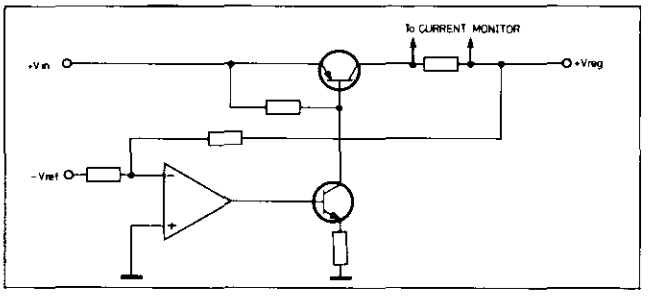

Figure 8–2–2. Principle of Fixed Positive Voltage Regulator

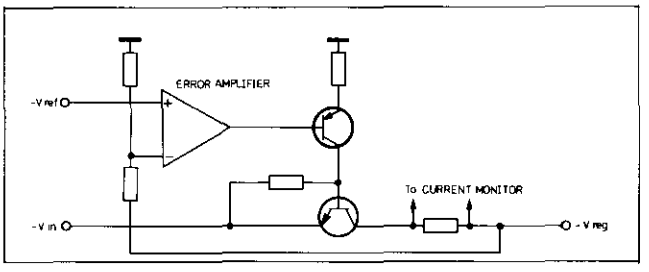

Figure 8–2–3. Principle of Fixed Negative Voltage Regulator

± 15 V Supplies

The ± 15 V supplies are derived from the regulated ± 23 V supplies by using "standard 3 pin" voltage regulators. Excessive current is detected by R31 and R32.

± 5 V/–5.2 V Supplies

The voltage regulator operating principles are the same as those which have been described in the previous paragraphs. Principles of excessive current detection of the +5 V regulator is shown in Figure 8–2–4. For the –5.2 V regulator the same principle applies with changed polaritites.

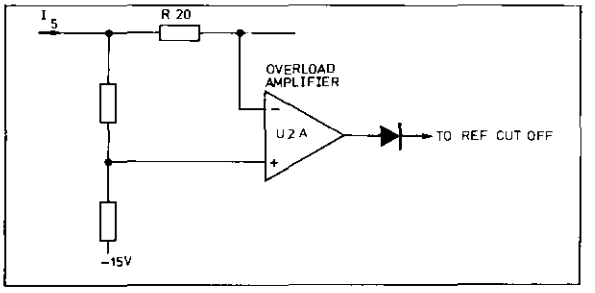

Figure 8–2–4. Current Monitor

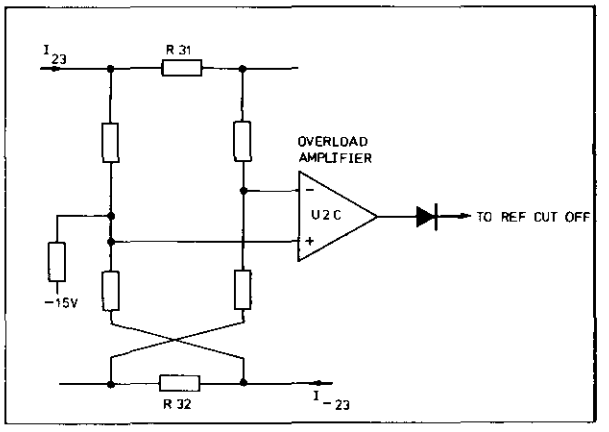

Figure 8–2–5. Summing Current Monitor

Switch-off Circuit

An overload signal from one of the current monitoring amplifiers will cause C6 to charge up via R8.
When the threshold level of the Schmitt trigger U2D, R9, R10 is reached, its negative going output turns Q1 on, the current for Vref is turned off, so Vref goes to zero causing all regulated voltages to be reduced to zero. After a time (determined by the time constant of R7 and C6) the threshold level of the Schmitt trigger (now negative) is reached, Q1 turns off, C5 begins to charge up, thus ensuring a slow ramp-like rise of the reference voltage at R5. If the overload still exists, then the whole procedure is repeated continuously.

TROUBLESHOOTING

Two basic faults can occur in the PSU:

a. no voltage or over-voltage caused by a faulty supply.

b. excessive current consumption (due to a short circuit or faulty component) on one of the boards which is recognizable by all supplies being repeatedly switched on and off.

Faulty Supply

If one supply is at fault, troubleshoot it as necessary to locate the faulty or failed components.

Excessive Current

Note that an excessive current taken from only one supply will cause all supplies to be switched on and off repeatedly. A short circuit across one of the supplies will cause all voltage rails to be narrow pulsed, thus the 8111A display will remain dark (LEDs under-energized). Excessive current, but no short circuit causes wider pulses and the display may flash.

To determine which is the overloaded supply, measure at TP2, TP4 and TP5 and note which current monitor is active, (see Figure 8–2–6).

Having determined the overloaded supply, locate the faulty board by pulling out each in turn starting with the output amplifier and finishing with the complete front panel assembly.

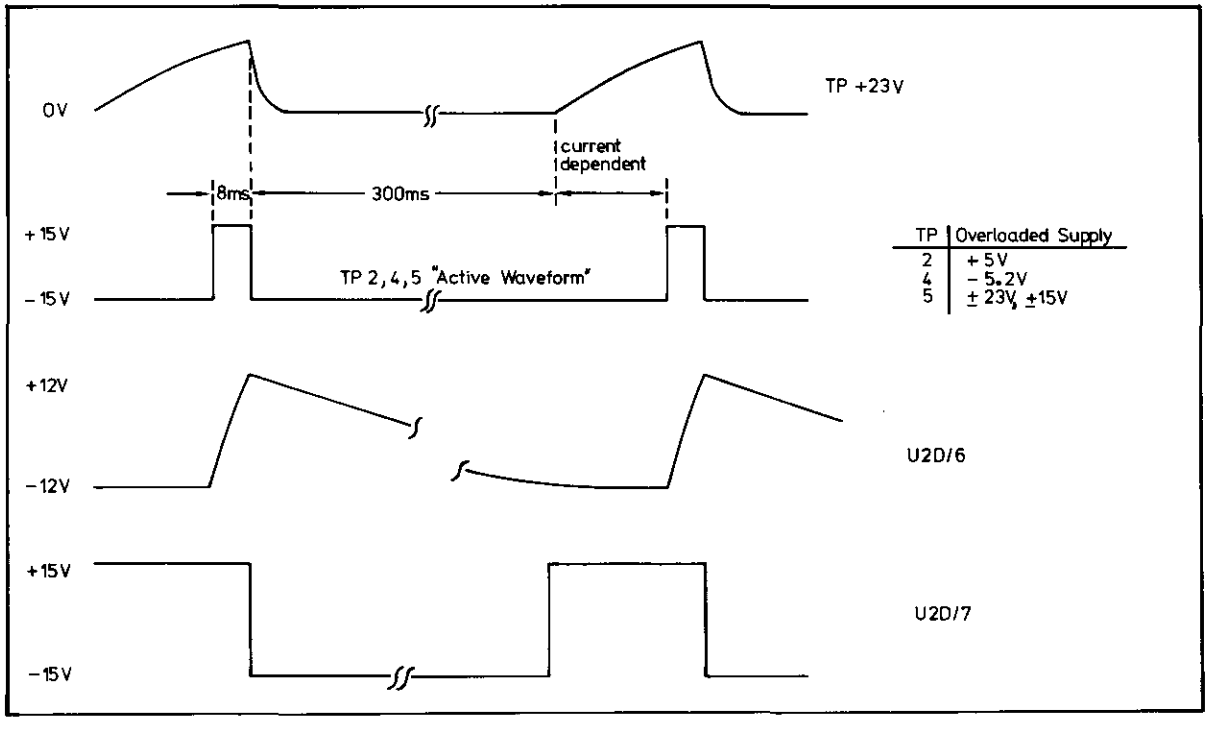

TP	Overloaded Supply
2	+5V
4	-5.2V
5	±23V, ±15V

Figure 8–2–6. Fault Condition Output Waveforms

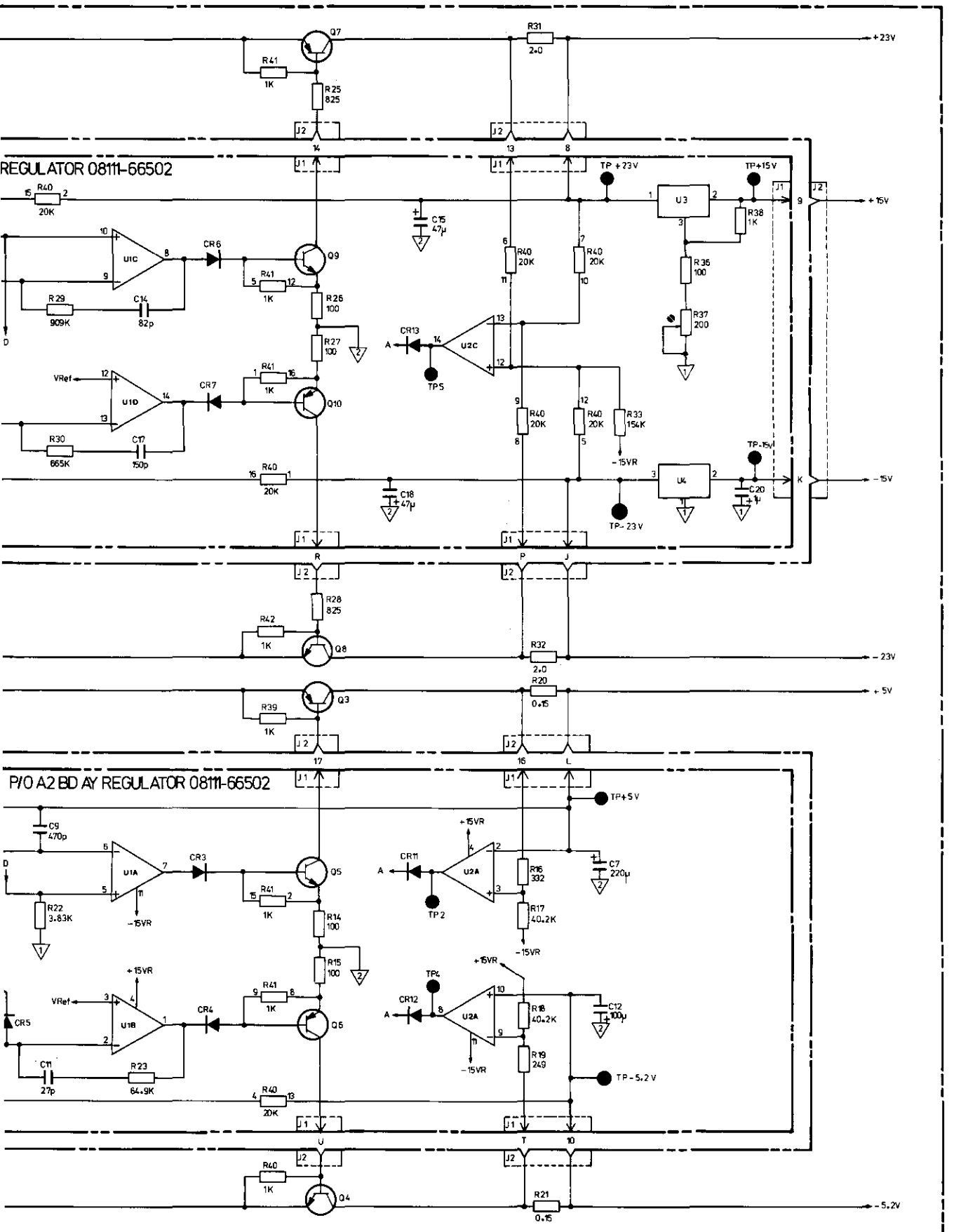

POWER SUPPLY A1, A2, A13 **2**

Y MOTHERBOARD 08111-66501 (STANDARD)
Y MOTHERBOARD 08111-66521 (OPTION 001)

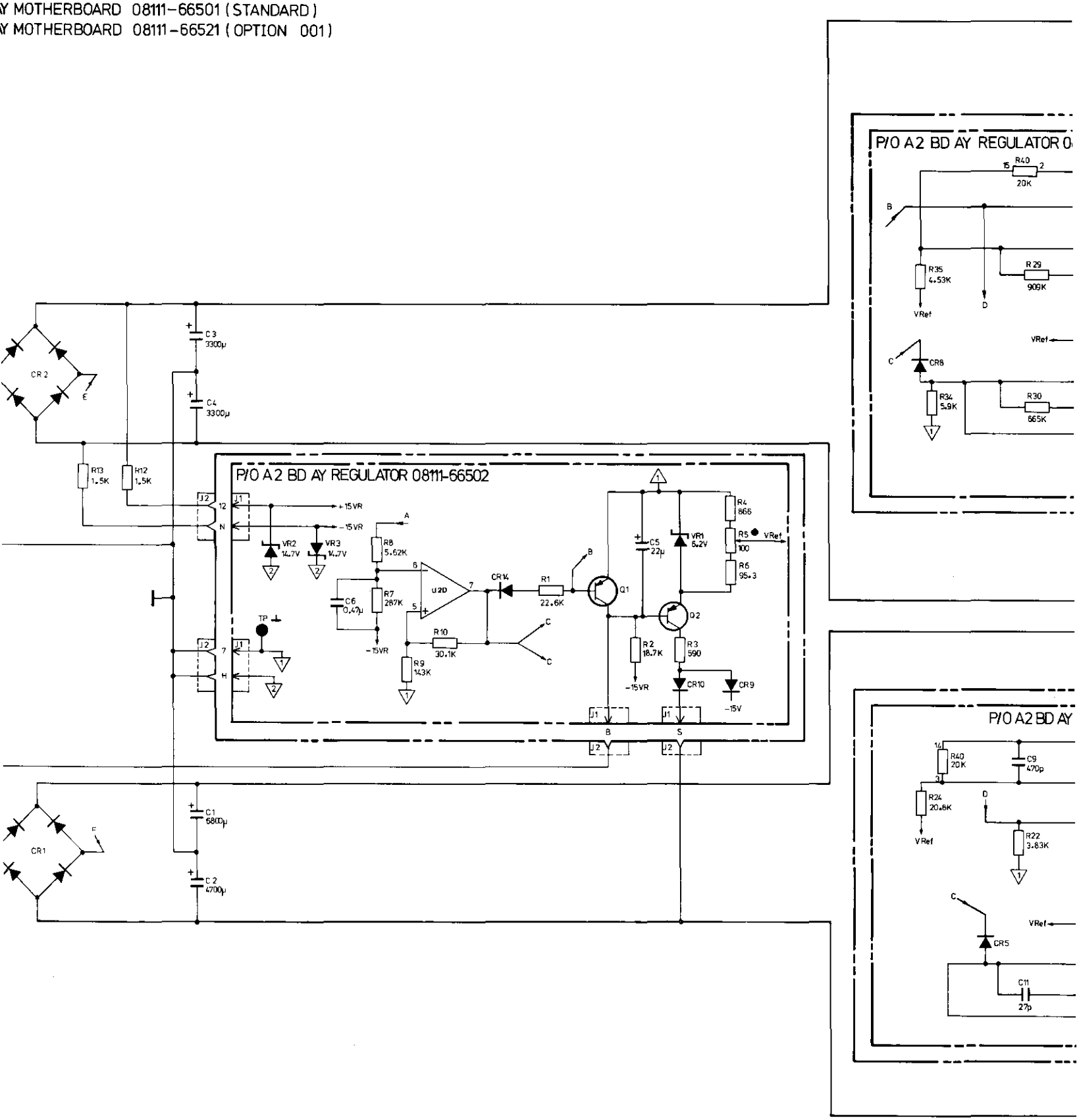

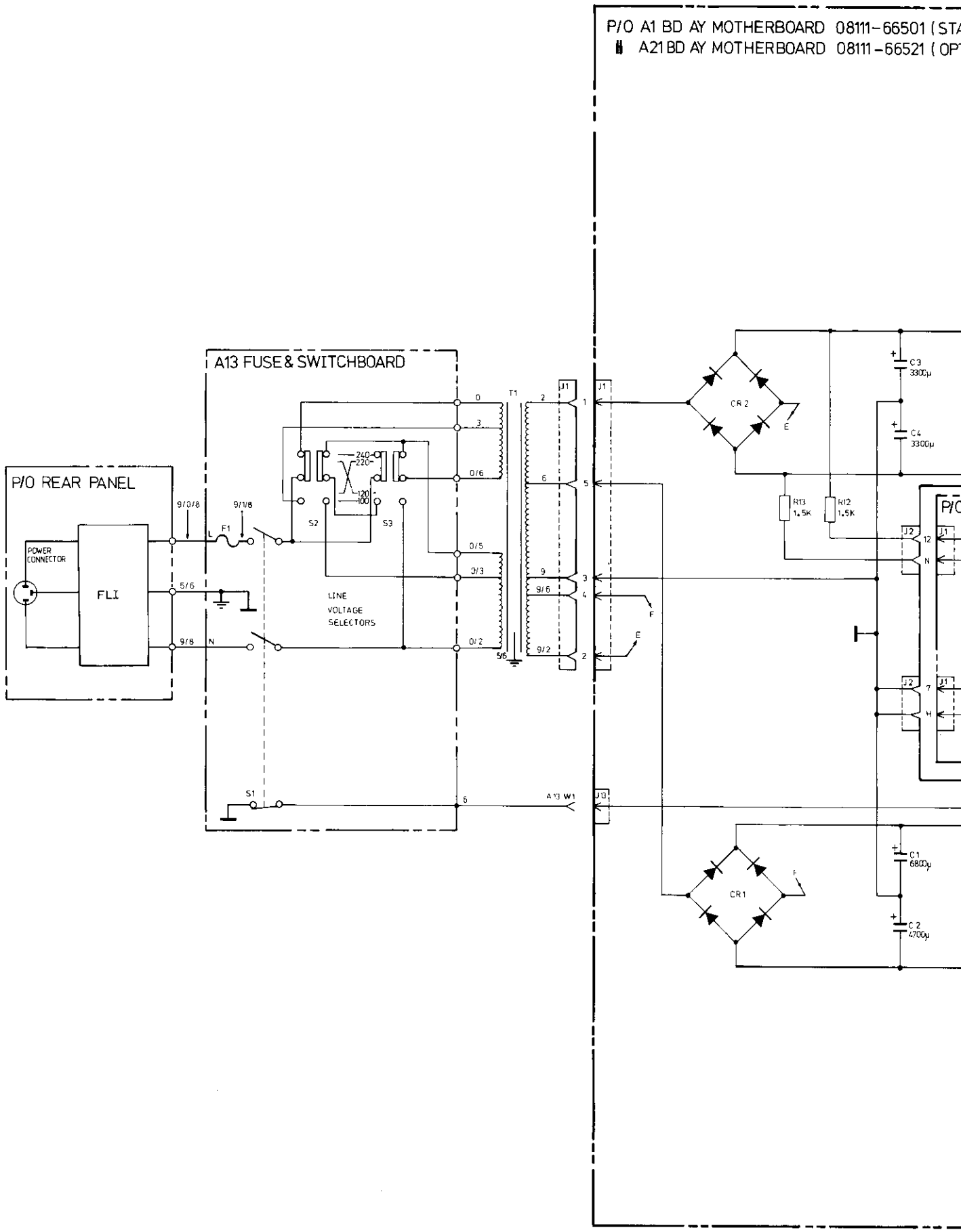
P/O A1 BD AY MOTHERBOARD 08111-66501 (STA
A21 BD AY MOTHERBOARD 08111-66521 (OPT
A13 FUSE & SWITCHBOARD
P/O REAR PANEL
POWER CONNECTOR
FLI
9/0/8
9/1/8
L
F1
5/6
9/8
N
S1
S2
S3
240
220
120
100
LINE VOLTAGE SELECTORS
0
3
0/6
0/5
0/3
0/2
6
A13 W1
T1
J1
9
9/6
9/2
5/6
CR 2
CR1
E
F
R13 1.5K
R12 1.5K
C3 3300μ
C4 3300μ
C1 6800μ
C2 4700μ
J2
12
7
H

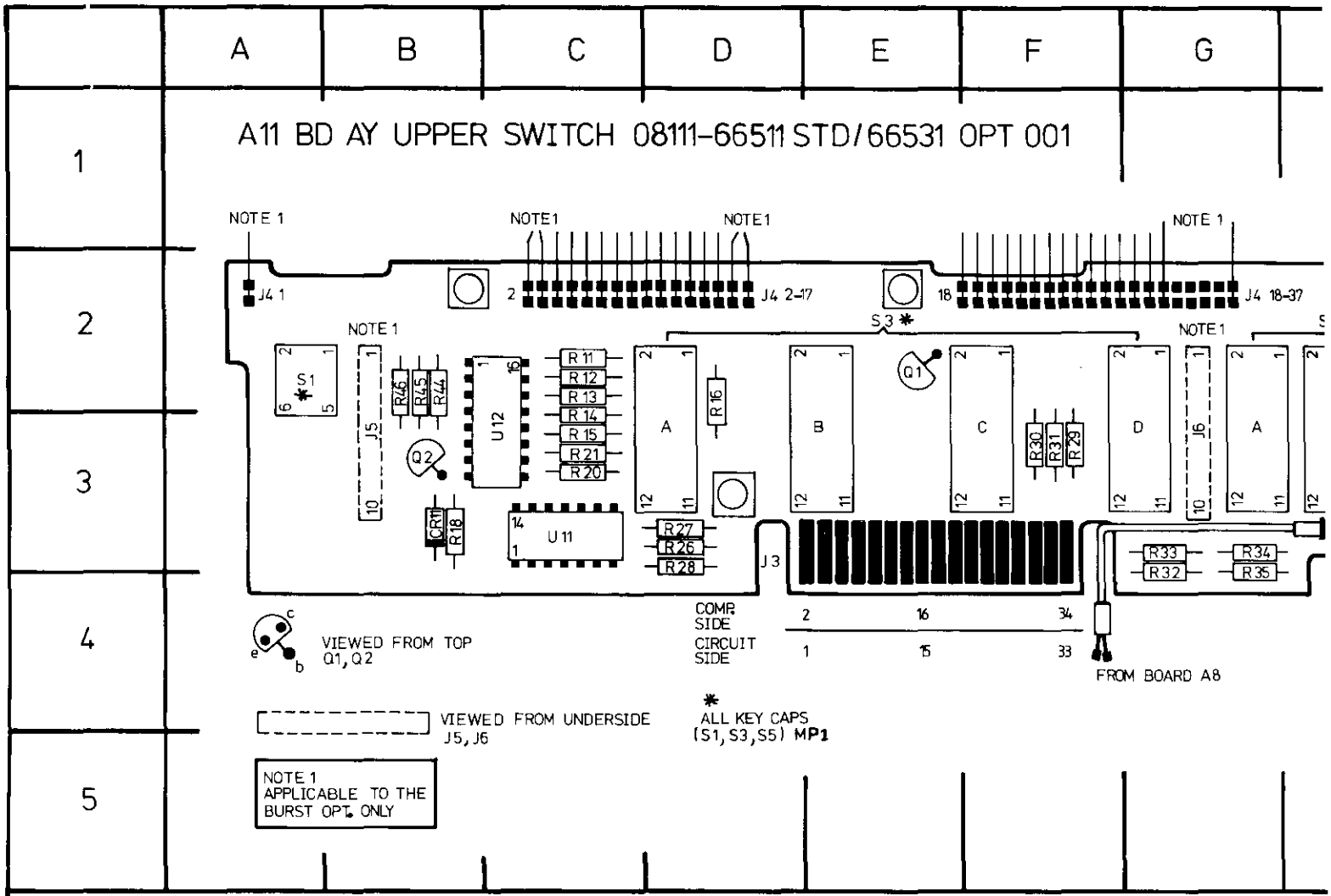

REF DESIG	GRID LOC	REF DESIG	GRID LOC
CR11	B3	R30	F3
Q1	E2	R31	F3
Q2	B3	R32	G4
R11	C2	R33	G3
R12	C2	R34	G3
R13	C2	R35	G4
R14	C3	R41	H3
R15	C3	R42	F3
R16	D2	R44	B2
R18	B3	R45	B2
R20	C3	R46	B2
R21	C3	S1	A2
R26	D3	S3	C/G3
R27	D3	S5	D/G3
R28	D3	U11	C3
R29	F3	U12	C3

3

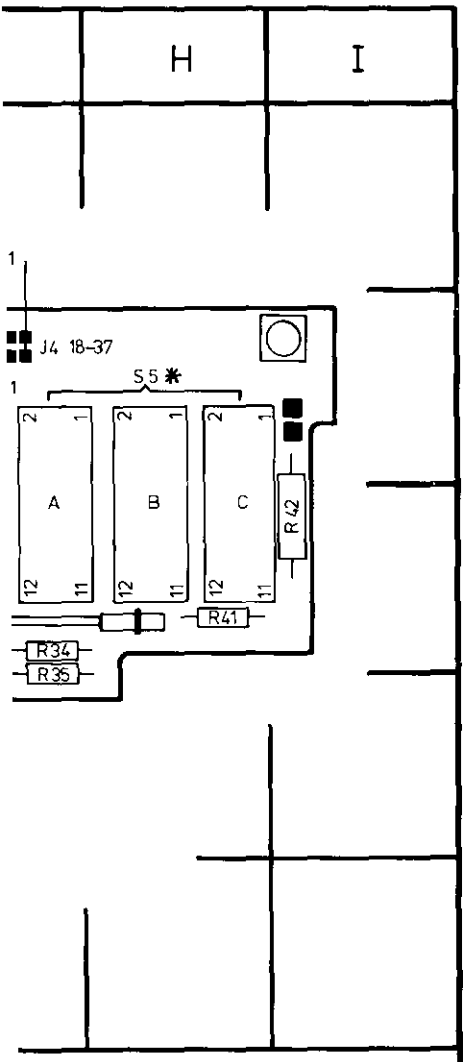

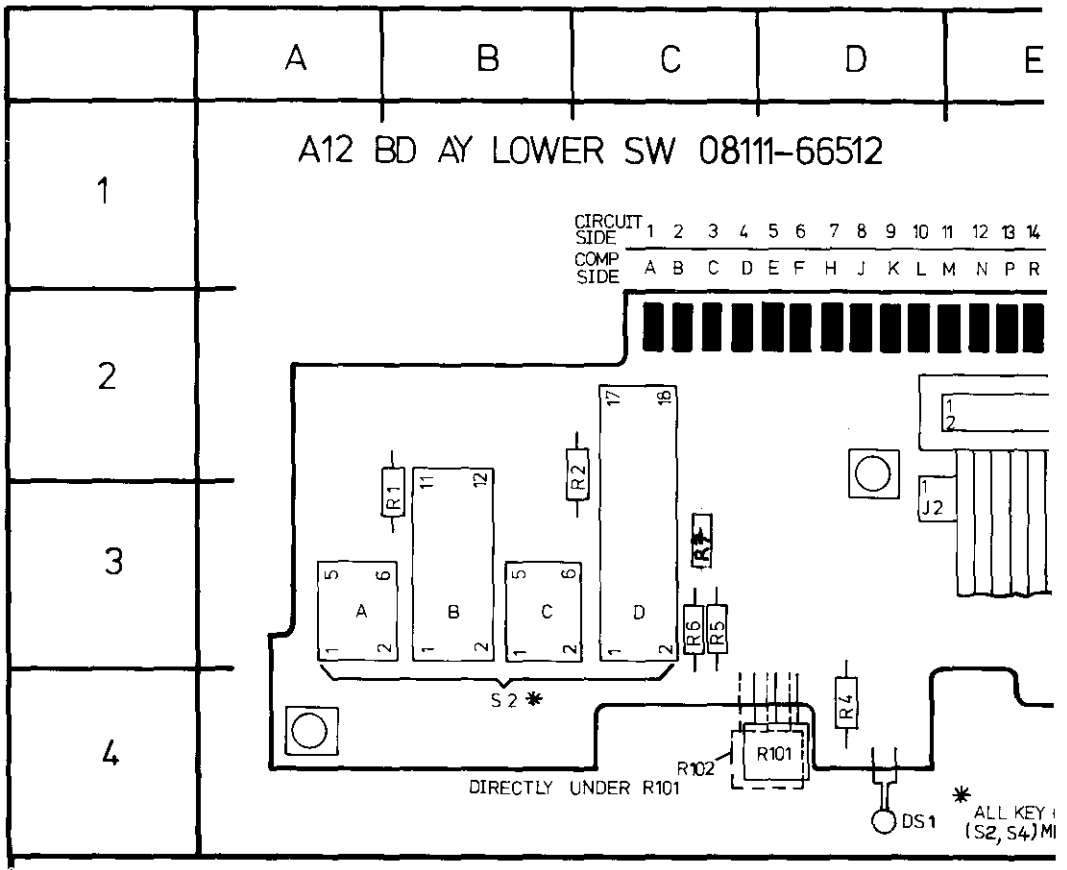

REF DESIG	GRID LOC
DS1	D4
J2	D/F2
R1	B3
R2	B3
R3	G3
R4	D4
R5	C3
R6	C3
R101	D4
R102	D4
R104	F4
S2	A/C3
S4	G/H3
R7	C3

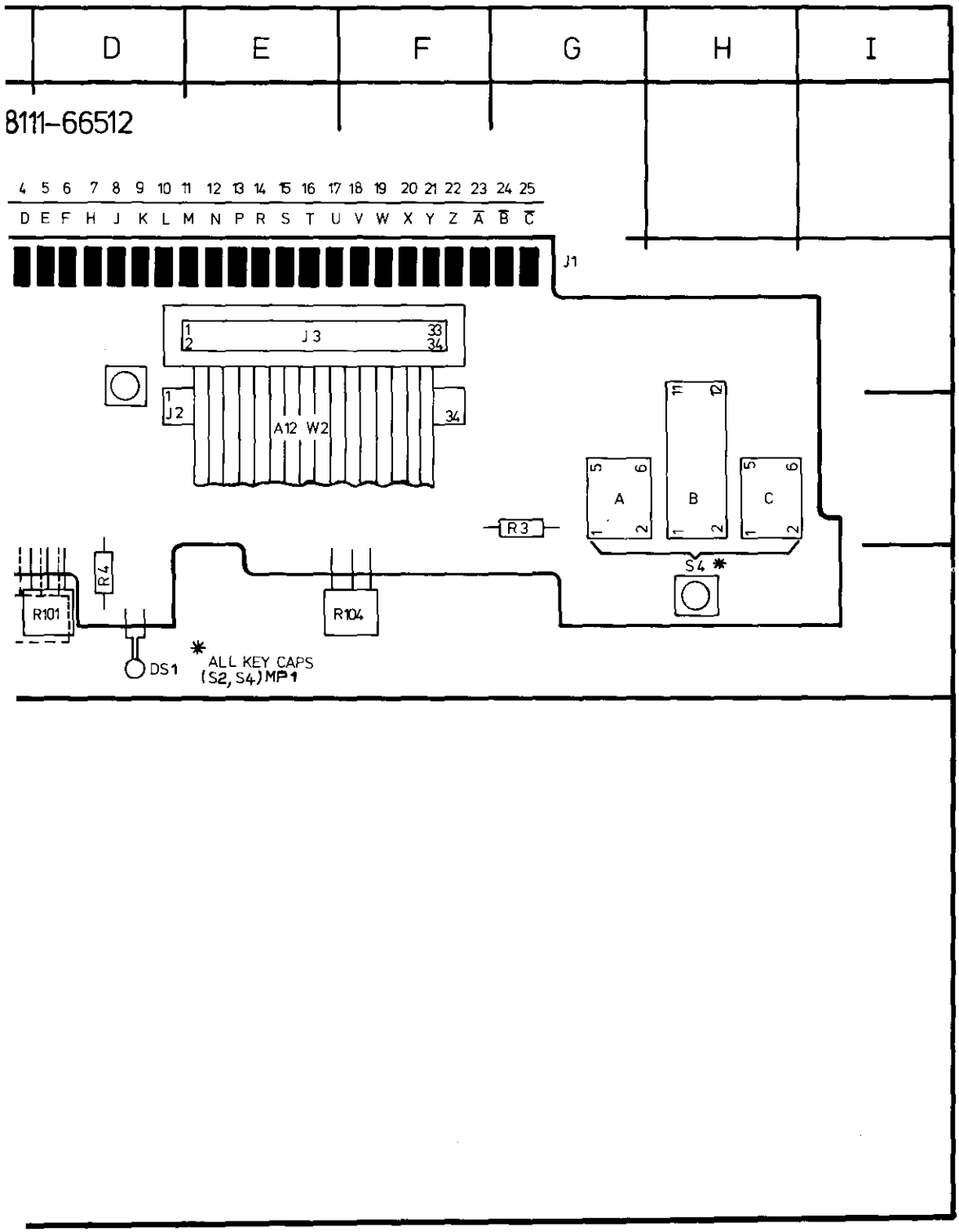
D
E
F
G
H
I
8111-66512
4 5 6 7 8 9 10 11 12 13 14 15 16 17 18 19 20 21 22 23 24 25
D E F H J K L M N P R S T U V W X Y Z A B C
J1
J3
1
2
33
34
J2
A12 W2
A
B
C
R3
S4 *
R4
R101
R104
DS1
* ALL KEY CAPS
(S2, S4) MP1

SERVICE BLOCK 3
SWITCH BOARDS A11 (A31), A12 3

THEORY OF OPERATION

The Switch boards contain the switches and interconnections required for selection of the appropriate circuit elements involved in the various 8111A operating modes and functions. An additional feature of A11 (A31) is that it includes the voltage reference, and parameter signal control circuitry for the Display board A–D converter. The reference selection and signal switching is achieved by multiplexer A11 U12 under the control of A11 U11.

TROUBLESHOOTING

NOTE: FRONT PANEL ASSEMBLY REMOVAL:
To troubleshoot either of the switch boards (or Display or Burst Number Control board) it is usually necessary to separate the complete Front Panel Assembly from the instrument frame and motherboard connector (J12) and reconnect it via an extender board. To remove the front Panel Assembly refer to Figure 3–1 to identify the securing screws to be removed. Access to the two upper screws is by removing MP24 – the plastic trim strip which can be levered out with the aid of a screwdriver.

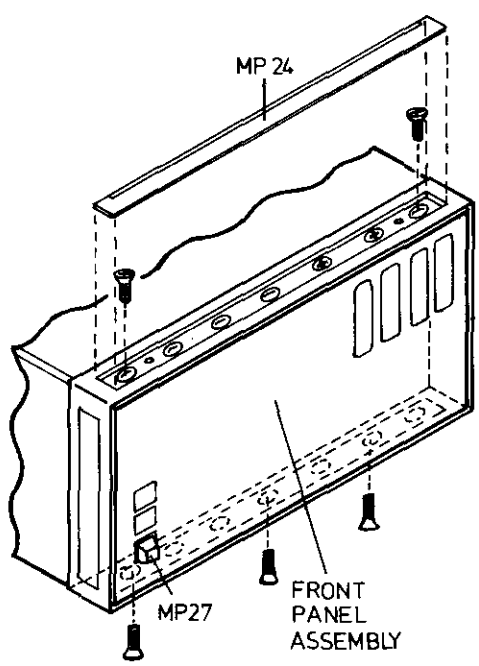

Figure 3–1.

After removal of the five screws the complete Front Panel assembly can be gently pushed forward out of the instrument frame away from the motherboard connector and over MP27.

NOTE: There are two interconnecting co-axial cables between the Front Panel assembly and boards A6 and A8, complete removal of the assembly from the instrument requires that they are disconnected at the two boards. The same applies (Option 001 instruments only) to the ribbon cable between A3 and A9, this should be disconnected at board A9.

REMEMBER to reconnect all of these cables when refitting the Front Panel Assembly in the instrument.

When refitting the assembly, MP27 should be guided through the appropriate front panel hole otherwise it can jam.

Since the switch boards comprise mostly passive components,no troubleshooting information is included for these. The only data is the following: If the displayed value is incorrect, then, as mentioned in Service Block 5 (Display), A11 U11 and A11 U12 may be faulty. The following truth table conditions should be checked and it should be noted that U11 pin 9 is high only when the Duty/Width and Frequency pushbuttons are both pressed.

Table 8–3–1. U11 Truth Table

Selected Waveform	U11 pin 8
⊓ ∿ ∿	L
⊓	H

Table 8–3–2. U11 Truth Table

Duty/Width Mode	U11 pin 5/6
variable	H
fixed 50 %	L
⊓	H

To check that the correct voltages are output from A11, refer to Service Block 5, Table 8–5–1 and A11 J4 pins 9, 10 and 11 (instead of A10 U1 pins 31, 30 and 36 respectively).

Table 8–3–3 U11, U12 Truth Table for various 8111A settings

8111A Setting			U11			U12	
Selected Waveform	**Freq & Duty/Width pressed for Burst No Display?**	**Duty Cycle Mode**	**pin 8**	**9**	**5/6**	**9**	**10**
⊓ or ⋀ or ∿	no	fixed 50 %	L	L	L	L	L
⊓ or ⋀ or ∿	no	variable	L	L	H	L	H
⊓ or ⋀ or ∿	yes	fixed 50 %	L	H	L	H	L
⊓ or ⋀ or ∿	yes	variable	L	H	H	H	L
⎍	yes	X	H	H	H	H	L
⎍	no	X	H	L	H	H	H

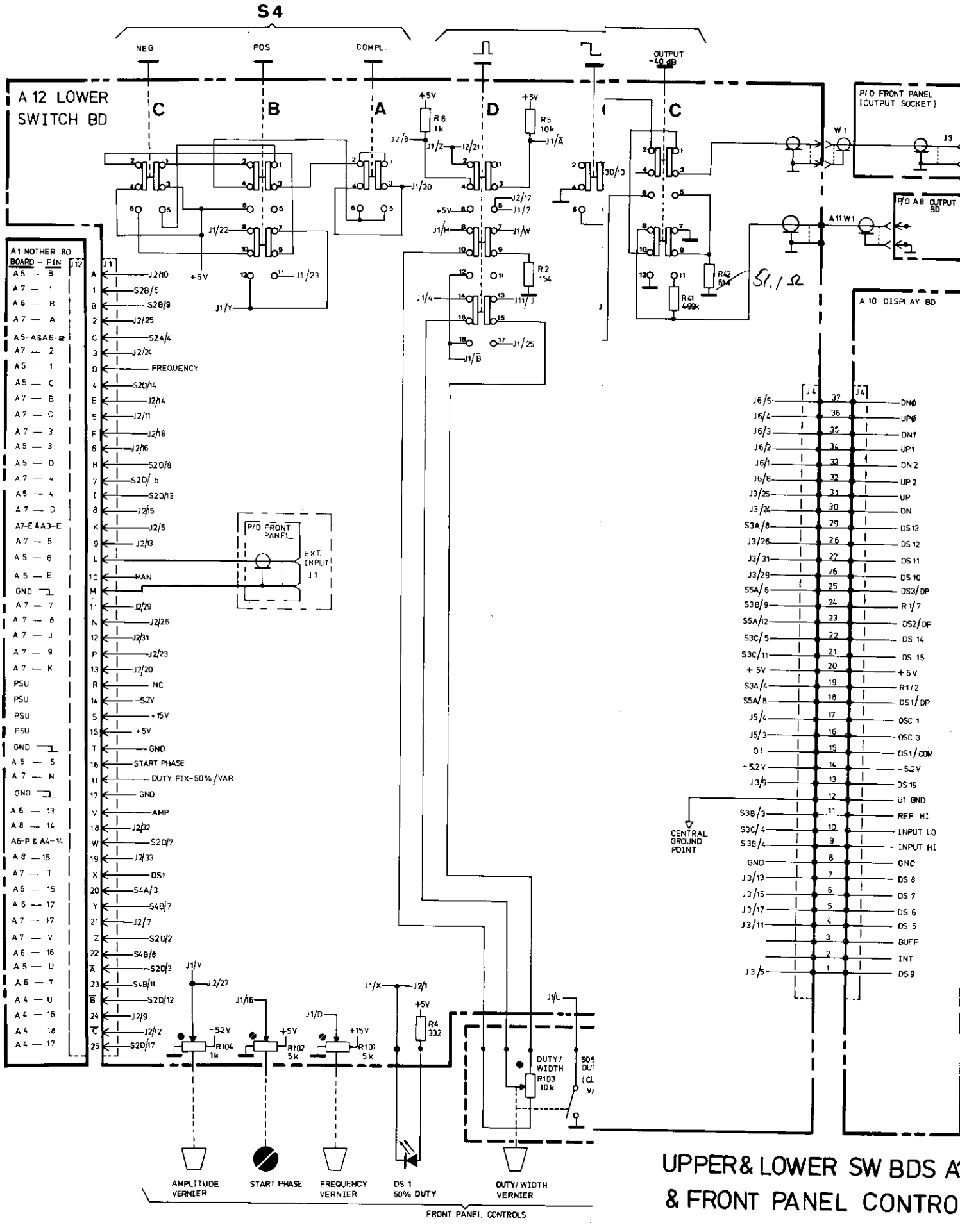
S4
NEG
POS
COMPL.
OUTPUT -40 dB
A 12 LOWER SWITCH BD
C
B
A
D
C
P/O FRONT PANEL (OUTPUT SOCKET)
W1
J3
P/O A8 OUTPUT BD
A11 W1
A 10 DISPLAY BD
A1 MOTHER BD
BOARD – PIN
J1
J2
J4
P/O FRONT PANEL
EXT. INPUT J1
FREQUENCY
MAN
START PHASE
DUTY FIX-50%/VAR
AMP
DS1
CENTRAL GROUND POINT
DUTY/WIDTH
R103 10k
R101 5k
R102 5k
R104 1k
R4 332
R2 154
R6 1k
R5 10k
R41 499k
R42 51k
51,1 Ω
AMPLITUDE VERNIER
START PHASE
FREQUENCY VERNIER
DS 1 50% DUTY
DUTY/WIDTH VERNIER
FRONT PANEL CONTROLS
UPPER & LOWER SW BDS A
& FRONT PANEL CONTRO

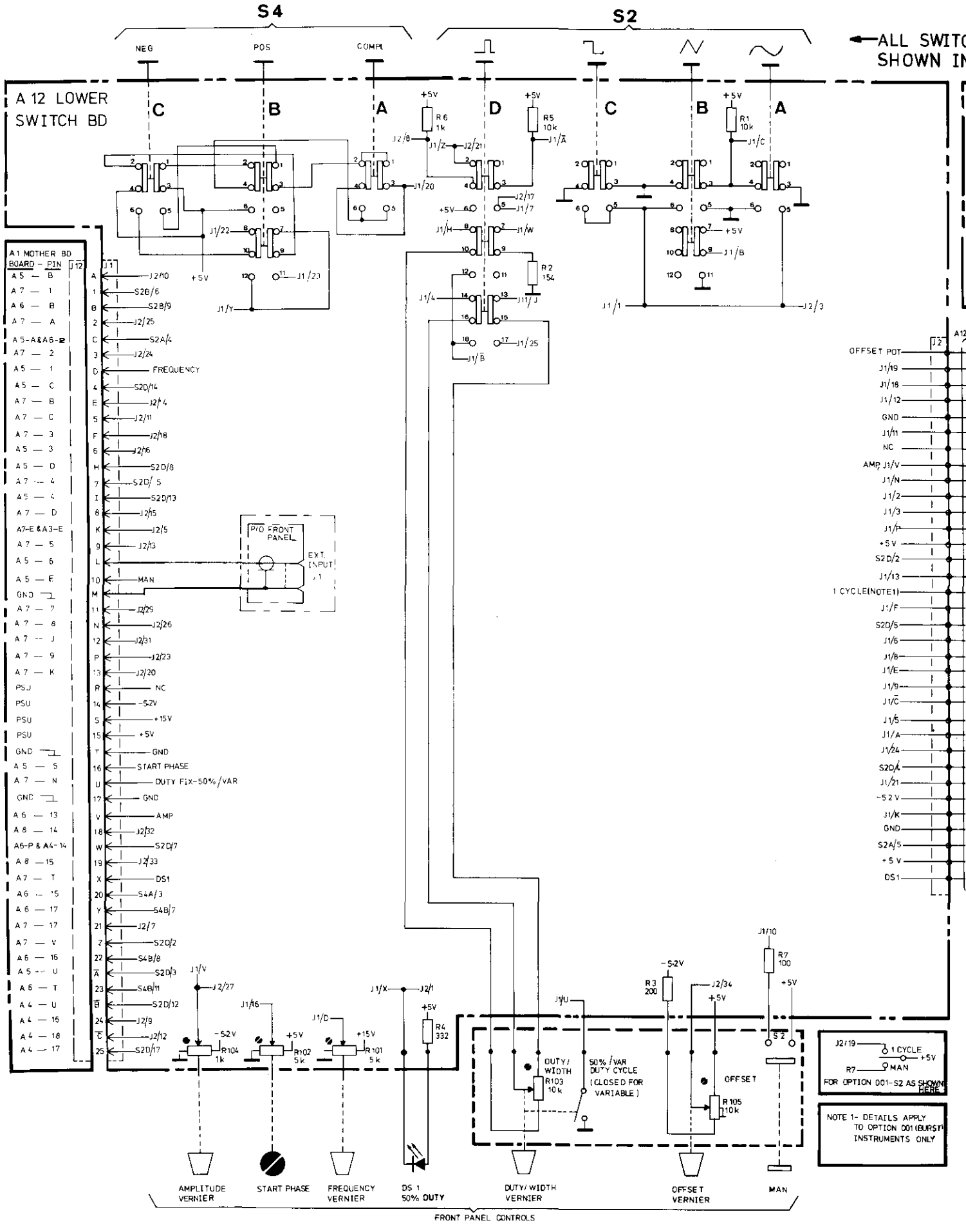
S4
S2
NEG
POS
COMPL
ALL SWITC
SHOWN IN
A 12 LOWER
SWITCH BD
A1 MOTHER BD
BOARD - PIN
P/O FRONT PANEL
EXT. INPUT
FREQUENCY
MAN
START PHASE
DUTY FIX-50%/VAR
AMP
DS1
OFFSET POT
1 CYCLE(NOTE1)
DUTY/WIDTH
50%/VAR DUTY CYCLE (CLOSED FOR VARIABLE)
OFFSET
FOR OPTION 001-S2 AS SHOWN HERE
NOTE 1- DETAILS APPLY TO OPTION 001 (BURST) INSTRUMENTS ONLY
AMPLITUDE VERNIER
START PHASE
FREQUENCY VERNIER
DS 1 50% DUTY
DUTY/WIDTH VERNIER
OFFSET VERNIER
MAN
FRONT PANEL CONTROLS

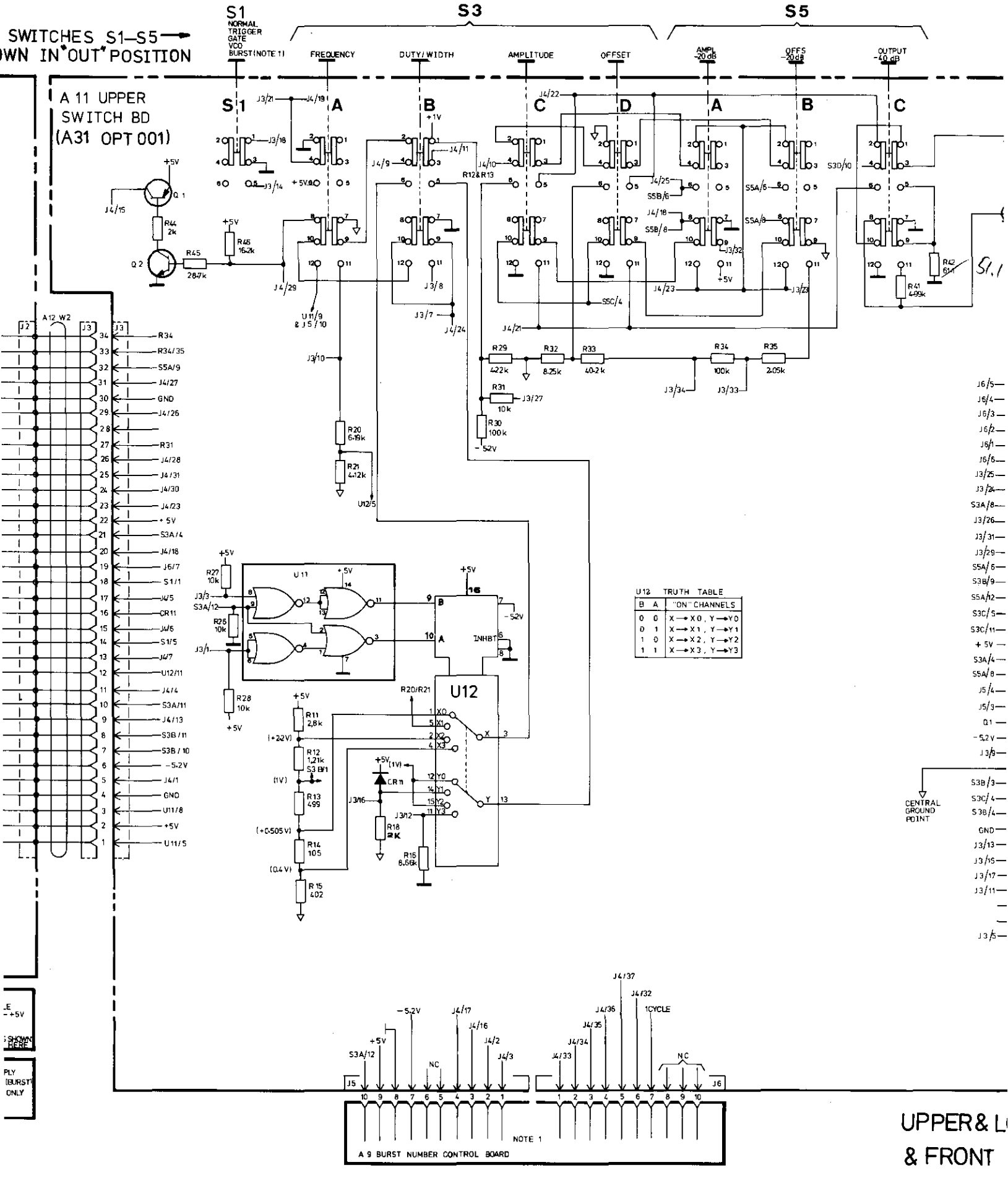
SWITCHES S1–S5
WN IN "OUT" POSITION
S1
NORMAL
TRIGGER
GATE
VCO
BURST (NOTE 1)
S3
FREQUENCY
DUTY/WIDTH
AMPLITUDE
OFFSET
S5
AMPL -20 dB
OFFS -20 dB
OUTPUT -40 dB
A 11 UPPER
SWITCH BD
(A31 OPT 001)
U12 TRUTH TABLE
B A "ON" CHANNELS
0 0 X → X0, Y → Y0
0 1 X → X1, Y → Y1
1 0 X → X2, Y → Y2
1 1 X → X3, Y → Y3
U12
U11
CENTRAL GROUND POINT
A 9 BURST NUMBER CONTROL BOARD
NOTE 1
UPPER & L
& FRONT

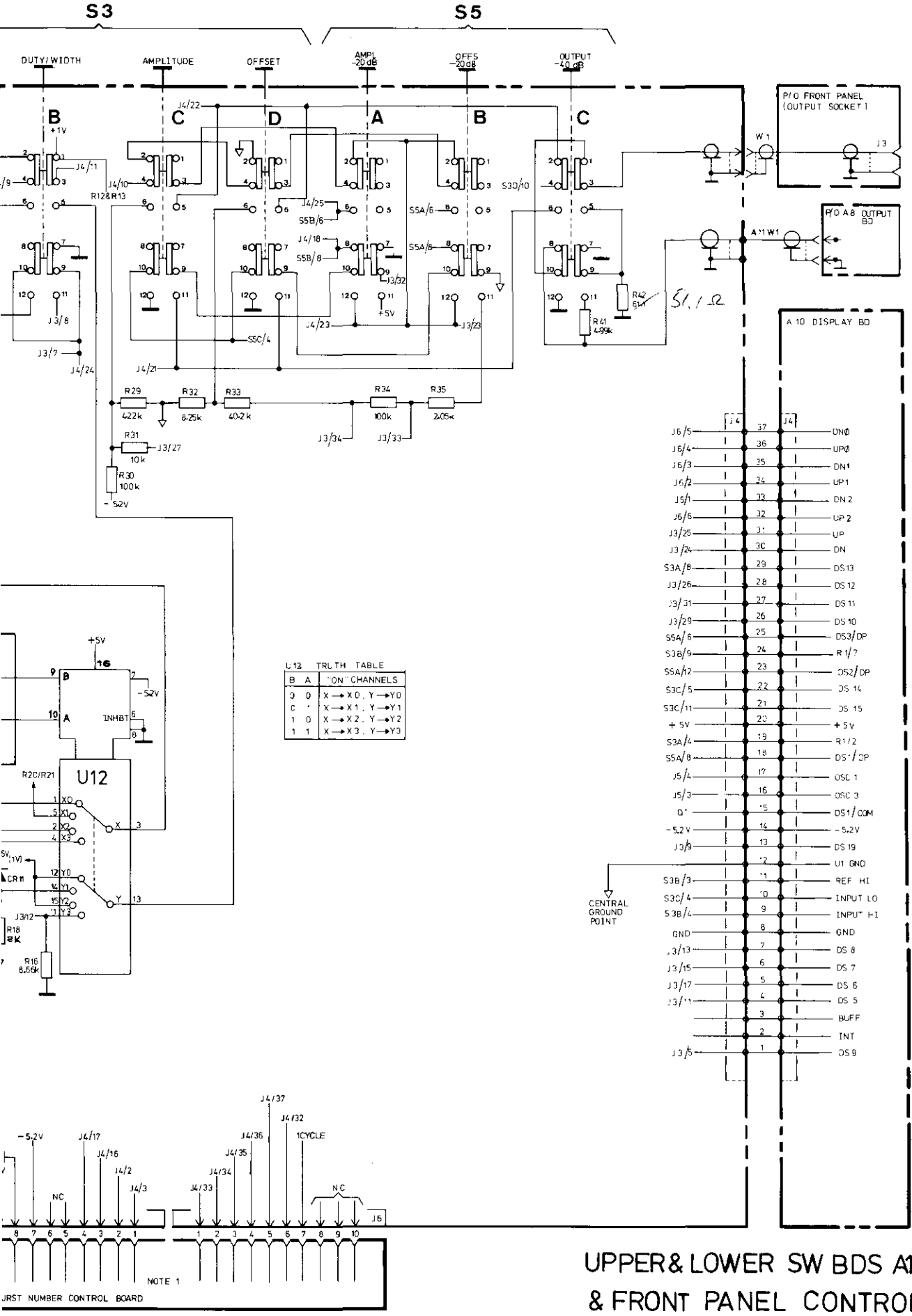

UPPER & LOWER SW BDS A11 & A12 & FRONT PANEL CONTROLS

3

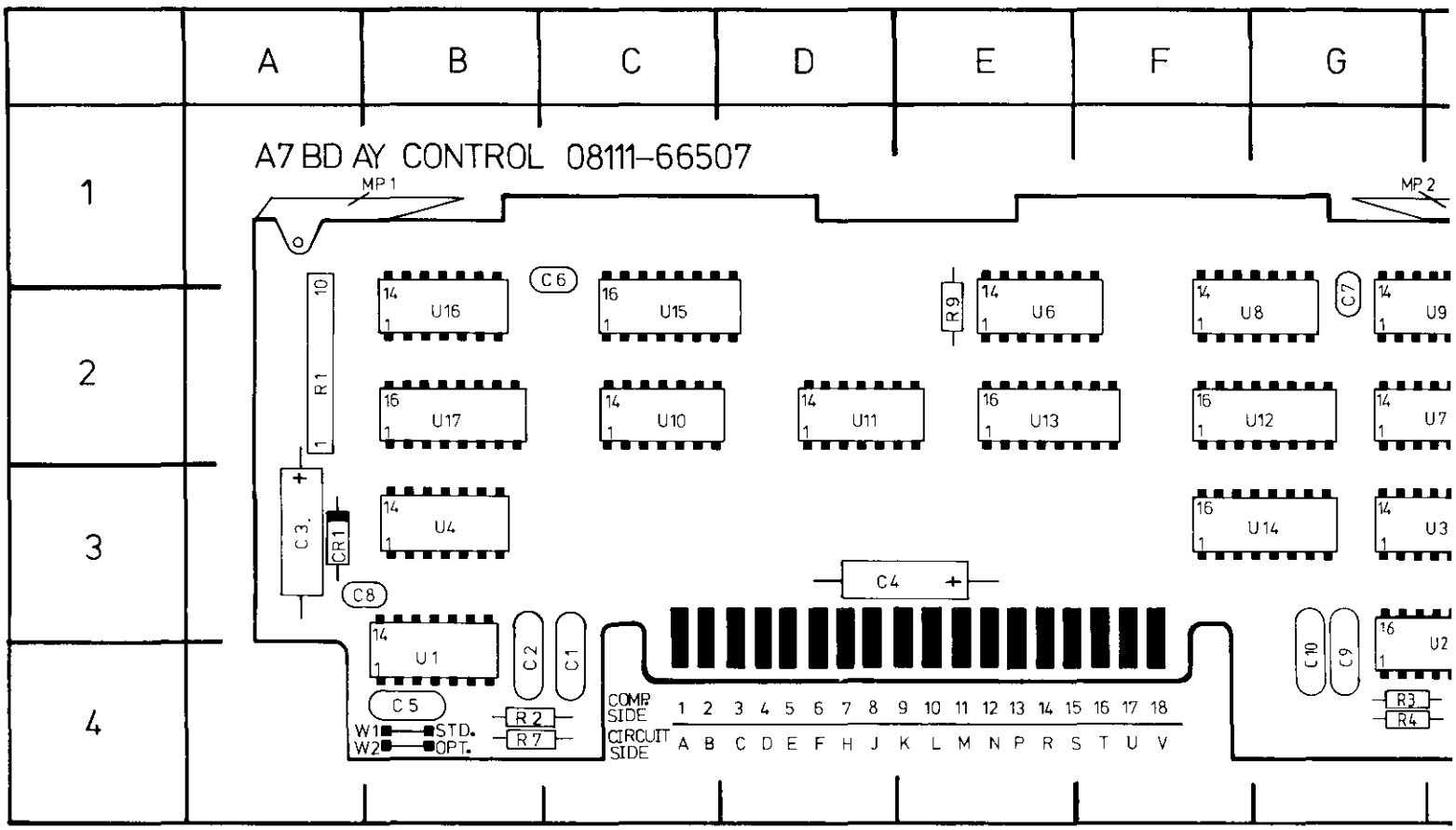

REF DESIG	GRID LOC	REF DESIG	GRID LOC
		U1	B4
C1	B4	U2	G/H3
C2	B4	U3	G3
C3	A3	U4	B3
C4	E3	U6	E2
C5	B4	U7	G2
C6	C1	U8	F2
C7	G2	U9	G2
C8	A3	U10	C2
C9	G3/4	U11	D2
C10	G3/4	U12	F2
CR1	A3	U13	G3
R1	A2	U14	F3
R2	B4	U15	C2
R3	G/H4	U16	B2
R4	G/H4	U17	B2
R7	B4	W1	B4
R9	E2	W2	B4

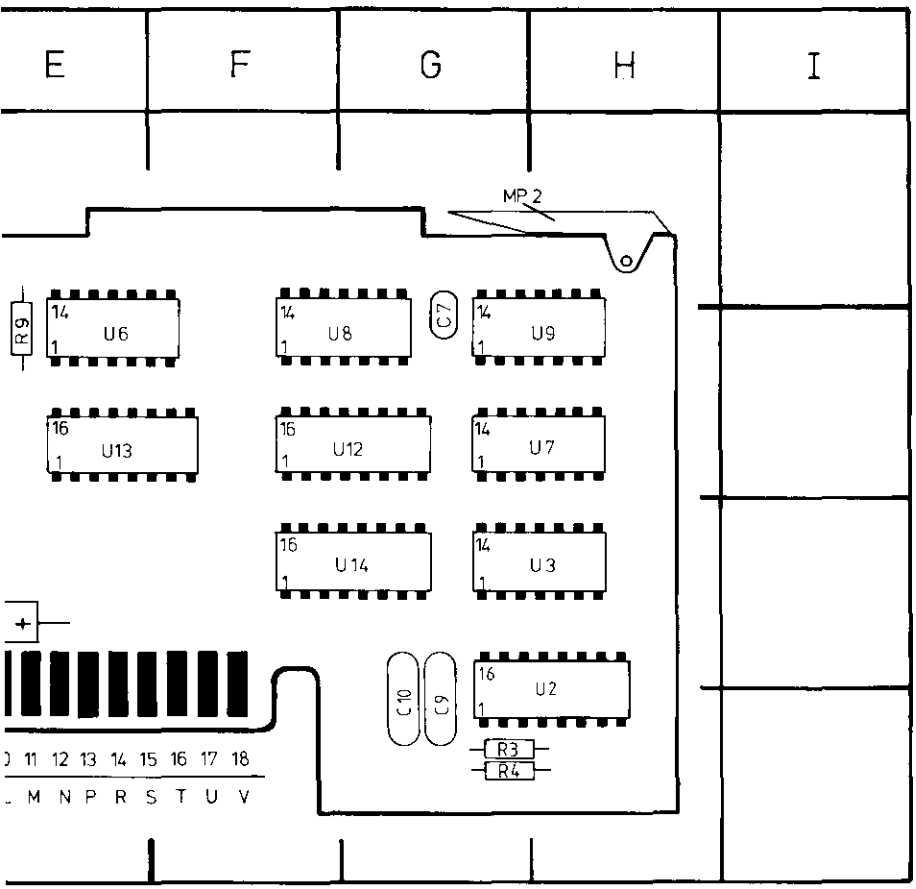
E
F
G
H
I
MP 2
R9
14
U6
1
14
U8
1
C7
14
U9
1
16
U13
1
16
U12
1
14
U7
1
16
U14
1
14
U3
1
+
C10
C9
16
U2
1
R3
R4
11 12 13 14 15 16 17 18
M N P R S T U V

SERVICE BLOCK 4
CONTROL BOARD A7 4

THEORY OF OPERATION

General

The Control Board is the interface between the Switch boards A11, A12 and VCO and Width boards. It also directly controls the following Display board LEDs: operating mode, numeric display decimal point position, and the width and frequency unit indicators. An additional feature of A7 is to provide 8111A "power on" initial condition settings via the preset circuitry.

OPERATION

Referring to the block diagram Figure 8–4–1, the board operation is as follows: The two up/down counters U12 and U13 are clocked by the range rocker switch and output their data to either the VCO or Width boards. They also output, via U14/U15, the appropriate range unit and decimal point data to the Display board A10. The range rocker switch data is input to either U12 or U13 via multiplexers U8A, C and U9A, C depending on whether the FREQUENCY or DUTY/WIDTH front panel pushbuttons are depressed.

The mode select pushbutton signal clocks a counter U17 whose outputs are fed to the VCO board A5 and sets the operating mode of the Triangle/Slope Generator IC A5U1. A7U17 outputs are also fed to the Display board and control the operating mode LEDs. In Option 001 (Burst) instruments A7U17 outputs enable the Burst function and associated mode LED.

On 8111A switch on the preset circuit sets the instrument to NORMAL mode, 1–10kHz frequency range and 1–10 μs pulse width range. In option 001 models the burst counter is preset to one.

Depending on whether a waveform function (instead of PULSE) is selected, the operative frequency range and/or the position of the DUTY CYCLE vernier/switch, the "50 % LED" will be energised and the VCO board current source suitably controlled via the circuit elements shown.

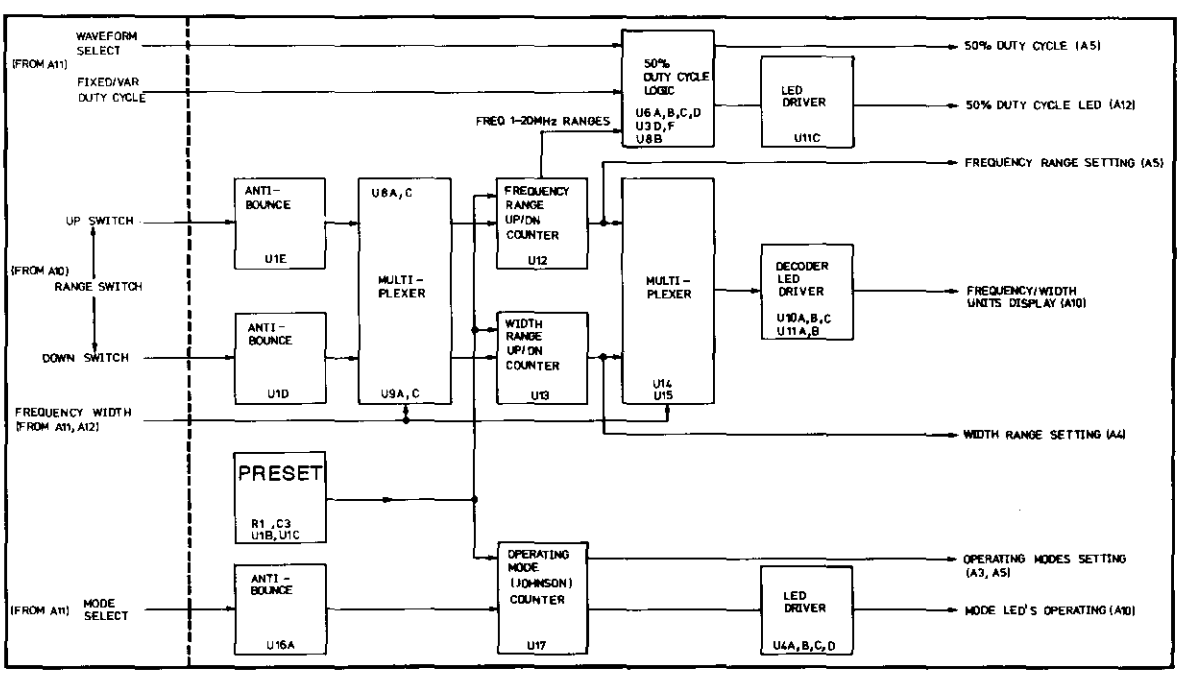

Figure 8–4–1. Simplified Control Board Block Diagram

TROUBLESHOOTING

The board can be considered as three separate functions for troubleshooting purposes. These are:

Fixed 50 % Duty Cycle Logic
Frequency/Width Up and Down Ranging
Operating Mode Selection.

Since the three functions are all very different it is quite easy to link a failure or fault to the appropriate one.

All logic levels are TTL and can be measured with a suitable logic probe, it can be either externally energised or the 8111A +15 V supply may be used.

To isolate a fault check the circuit operation with the aid of the following truth tables.

Table 8–4–1. U6, U11 Truth Table

8111A Setting	U6 pin 13	U11 pin 8
⎍–Mode	H	H
∿ ∿ ⎍ Mode, fixed 50 % DTY	H	L
∿ ∿ ⎍ Mode, variable DTY, 1 MHz–20 MHz	H	L
∿ ∿ ⎍ Mode, variable DTY, 1 Hz–1000 kHz	L	H

Table 8–4–2. U8 Truth Table

8111A Setting	down ranging				up ranging			
U8 pin	1	2	13	12	11	9	10	8
Frequency pushbutton pressed								
10 – 20 MHz	H	H	⎍	⎍	H	L	⎍	H
1 – 10 MHz	H	H	⎍	⎍	H	H	⎍	⎍
100 – 1000 kHz	H	H	⎍	⎍	H	H	⎍	⎍
10 – 100 kHz	H	H	⎍	⎍	H	H	⎍	⎍
1 – 10 kHz	H	H	⎍	⎍	H	H	⎍	⎍
100 – 1000 Hz	H	H	⎍	⎍	H	H	⎍	⎍
10 – 100 Hz	H	H	⎍	⎍	H	H	⎍	⎍
1 – 10 Hz	H	L	⎍	H	H	H	⎍	⎍
Frequency pushbutton released	L	X	⎍	H	L	X	⎍	H

Table 8–4–3. U9 Truth Table

8111A Setting	U9 pin	down ranging 1	2	13	12	up-ranging 11	9	10	8
Width and ⎍-Mode pushbuttons pressed									
10 – 100 ms		H	H	⎿	⎾	H	L	⎿	H
1 – 10 ms		H	H	⎿	⎾	H	H	⎿	⎾
100 – 1000 µs		H	H	⎿	⎾	H	H	⎿	⎾
10 – 100 µs		H	H	⎿	⎾	H	H	⎿	⎾
1 – 10 µs		H	H	⎿	⎾	H	H	⎿	⎾
100 – 1000 ns		H	H	⎿	⎾	H	H	⎿	⎾
25 – 100 ns		H	L	⎿	H	H	H	⎿	⎾
Width or ⎍-Mode pushbutton released		L	X	⎿	H	L	X	⎿	H

Fixed 50 % Duty Cycle Logic

Table 8–4–4. U12 Truth Table

8111A Frequency Range Setting	Range Data U12 pin	C 6	B 2	A 3
10 – 20 MHz		L	L	L
1 – 10 MHz		L	L	H
100 – 1000 KHz		L	H	L
10 – 100 KHz	(Status at 8111A	L	H	H
1 – 10 KHz	Switch on) →	H	L	L
100 – 1000 Hz		H	L	H
10 – 100 Hz		H	H	L
1 – 10 Hz		H	H	H

Frequency/Width Up/Down Ranging

Table 8–4–5. U13 Truth Table

8111A Width Range Setting	Range Data U13 pin	C 6	B 2	A 3
10 – 100 ms		L	L	L
1 – 10 ms		L	L	H
100 – 1000 µs		L	H	L
10 – 100 µs		L	H	H
1 – 10 µs	(Switch on Status) →	H	L	L
100 – 1000 ns		H	L	H
25 – 100 ns		H	H	L

Operating Mode Selection

Table 8–4–6. U17 Truth Table

8111A Setting / U17pin	Q_0 3	Q_1 2	Q_2 4	Q_3 7	Q_4 10
NORMAL	H	L	L	L	L
TRIGGER	L	H	L	L	L
GATE	L	L	H	L	L
VCO	L	L	L	H	L
BURST (Option 001 only)	L	L	L	L	H

The counter is reset when Q_4 (Q_5 in Option 001) goes to high level.

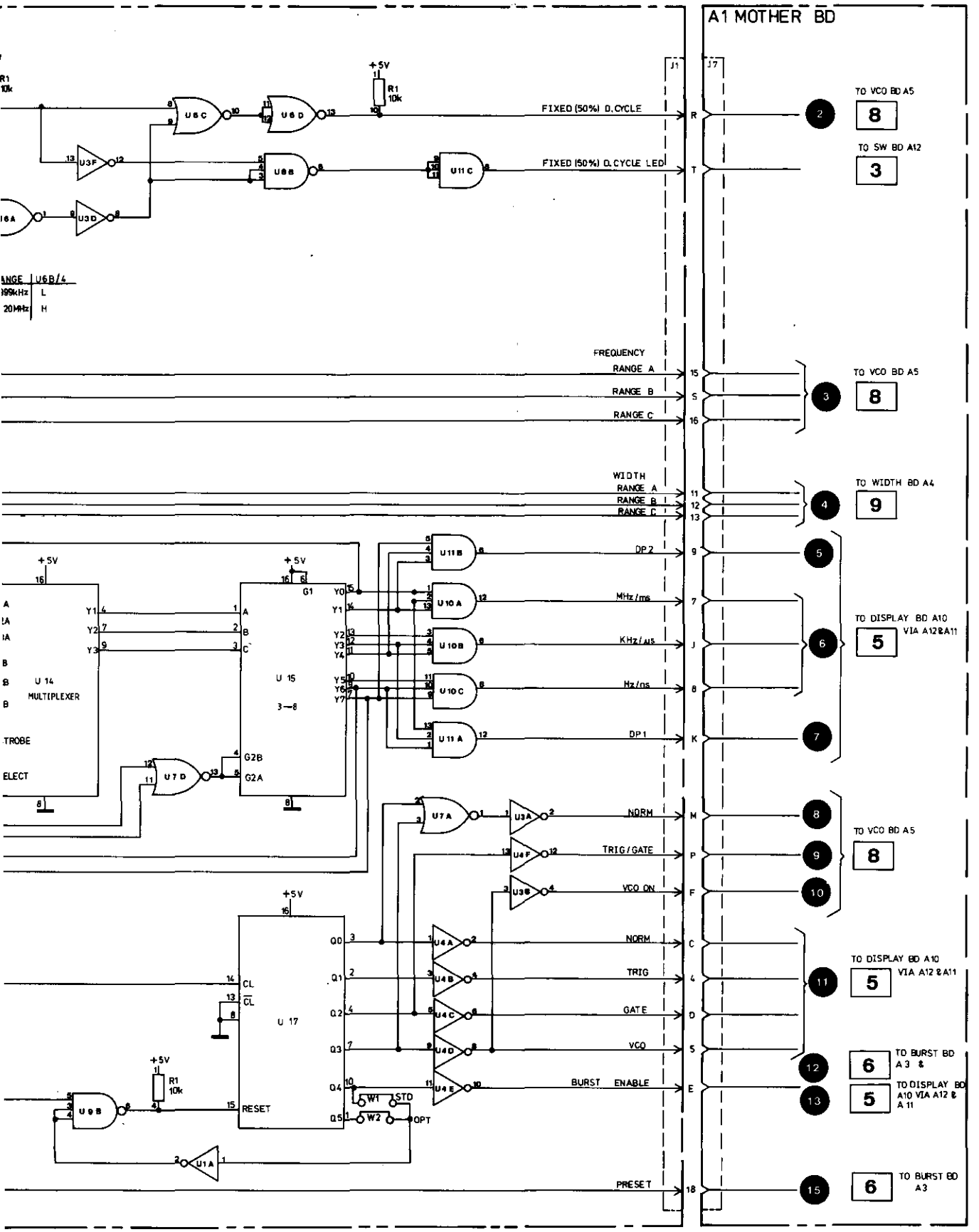

CONTROL BOARD A7 **4**

ONTROL 08111-66507

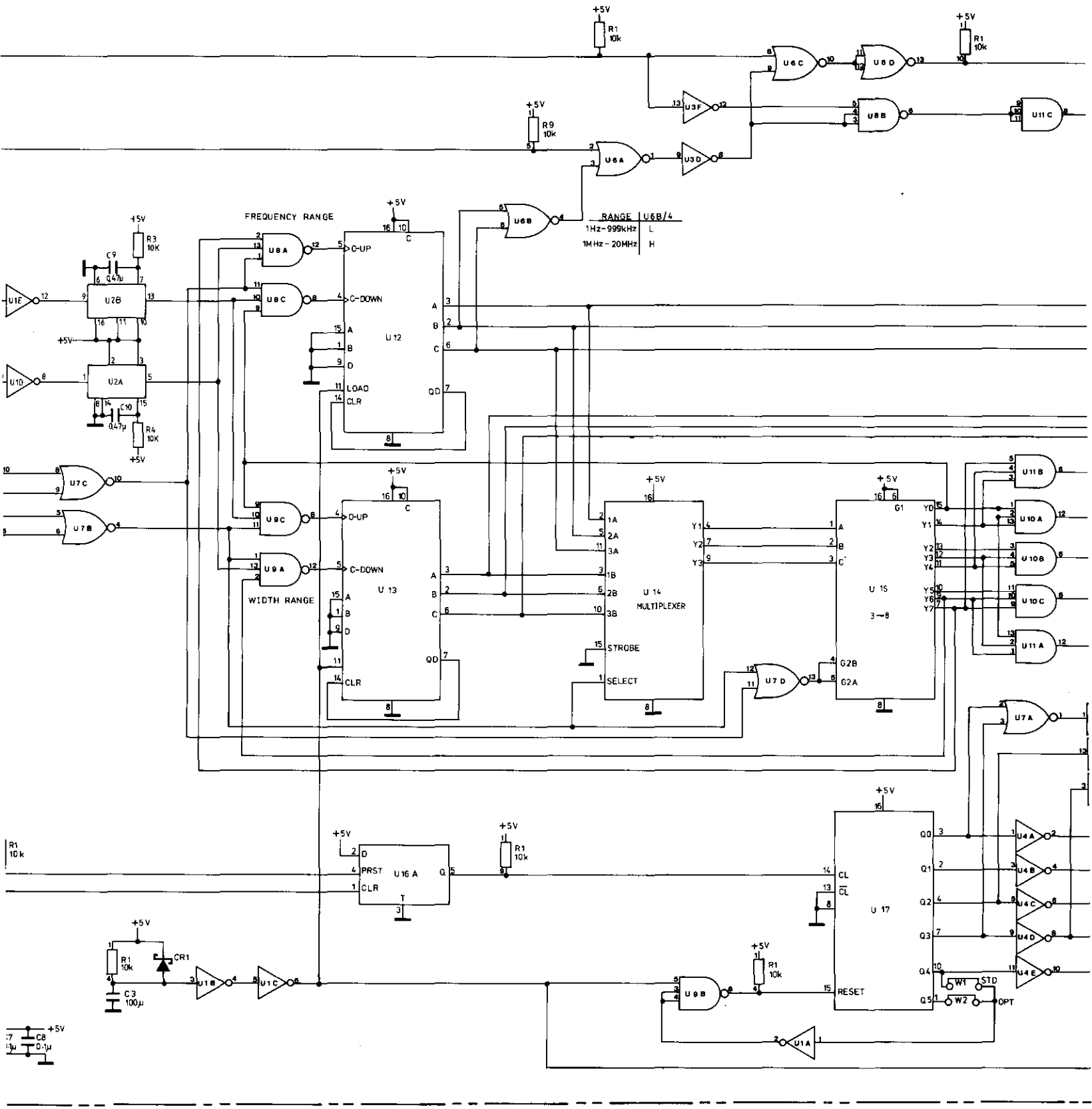

BETWEEN BOARDS
LESS OTHERWISE INDICATED

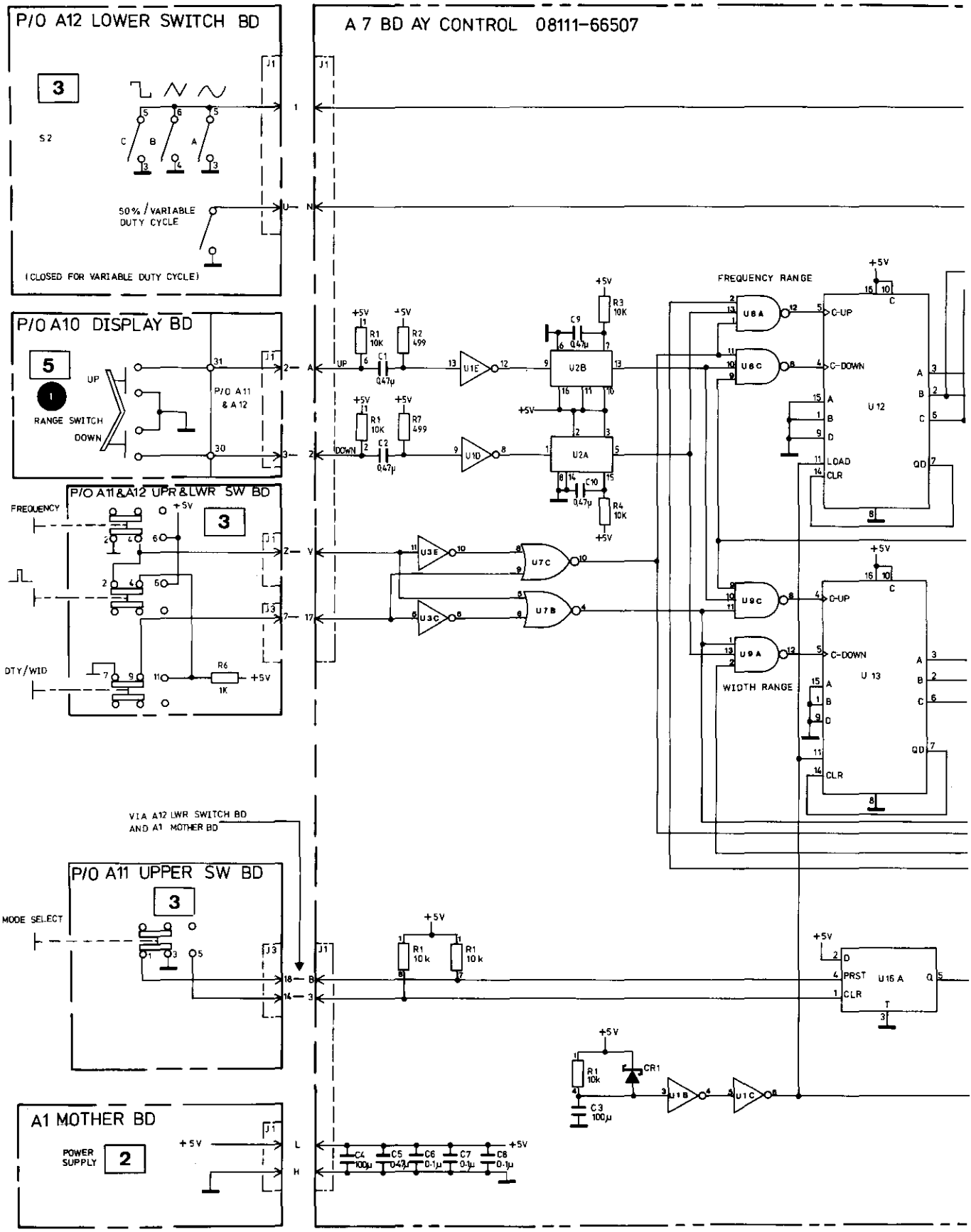

NOTE : ALL INTERCONNECTIONS BETWEEN BOARDS VIA A1 MOTHERBOARD UNLESS OTHERWISE INDICATED

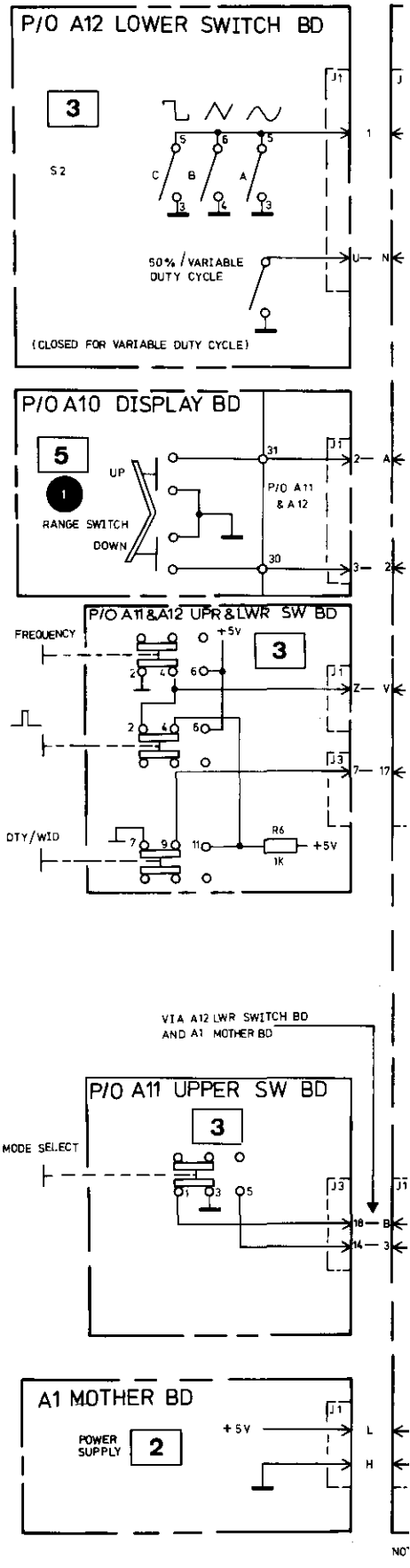
P/O A12 LOWER SWITCH BD
3
S2
C
B
A
50% / VARIABLE DUTY CYCLE
(CLOSED FOR VARIABLE DUTY CYCLE)
P/O A10 DISPLAY BD
5
1
RANGE SWITCH
UP
DOWN
P/O A11 & A12
P/O A11&A12 UPR&LWR SW BD
FREQUENCY
+5V
3
DTY/WID
R6
1K
+5V
VIA A12 LWR SWITCH BD AND A1 MOTHER BD
P/O A11 UPPER SW BD
3
MODE SELECT
A1 MOTHER BD
POWER SUPPLY
2
+5V

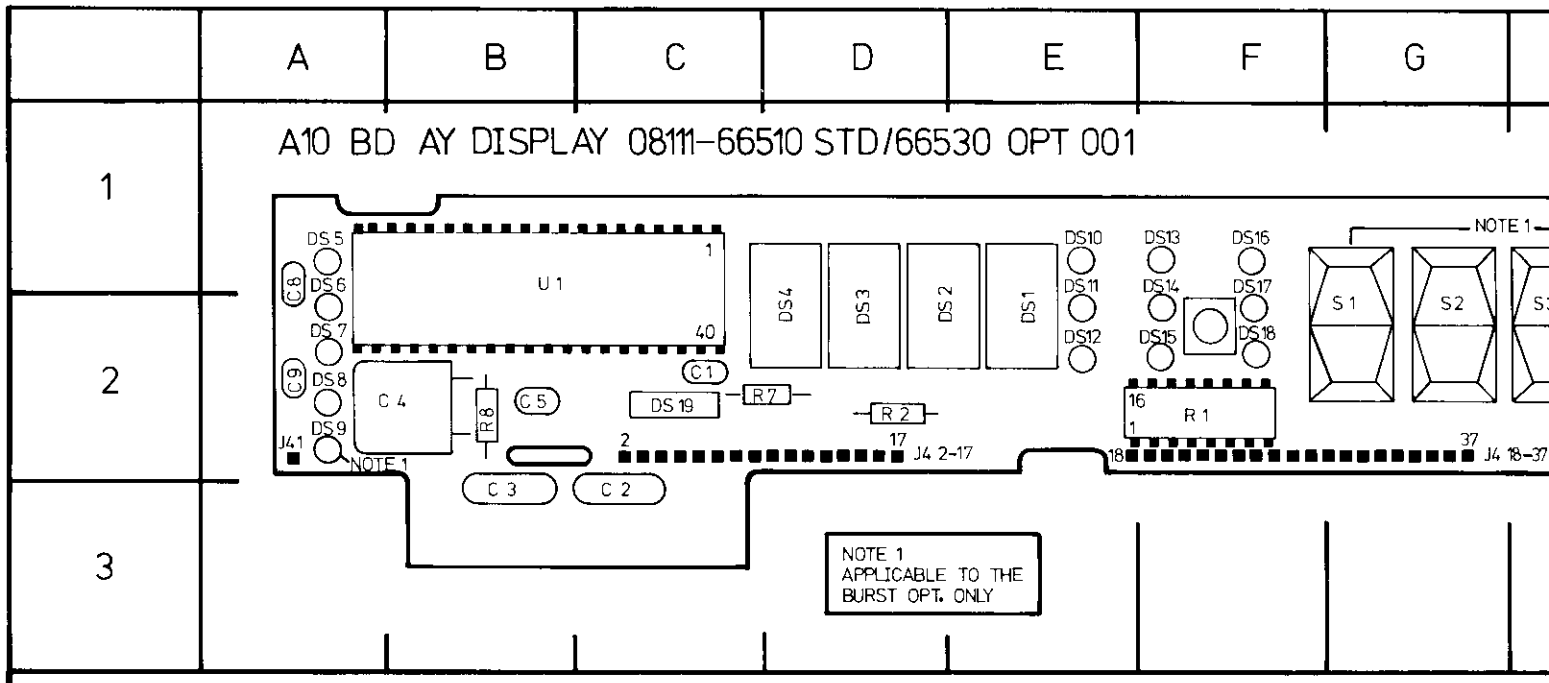

REF DESIG	GRID LOC	REF DESIG	GRID LOC	REF DESIG	GRID LOC
C1	C2	DS9	A2	S1	G2
C2	C3	DS10	E1	S2	D2
C3	B3	DS11	E2	S3	H2
C4	B2	DS12	E2	S4	H2
C5	B2	DS13	F1	U1	B/C2
C8	A1	DS14	F2		
C9	A2	DS15	F2		
DS1	E2	DS16	F1		
DS2	E2	DS17	F2		
DS3	D2	DS18	F2		
DS4	D2	DS19	C2		
DS5	A1	R1	F2		
DS6	A2	R2	D2		
DS7	A2	R7	C2		
DS8	A2	R8	B2		

5

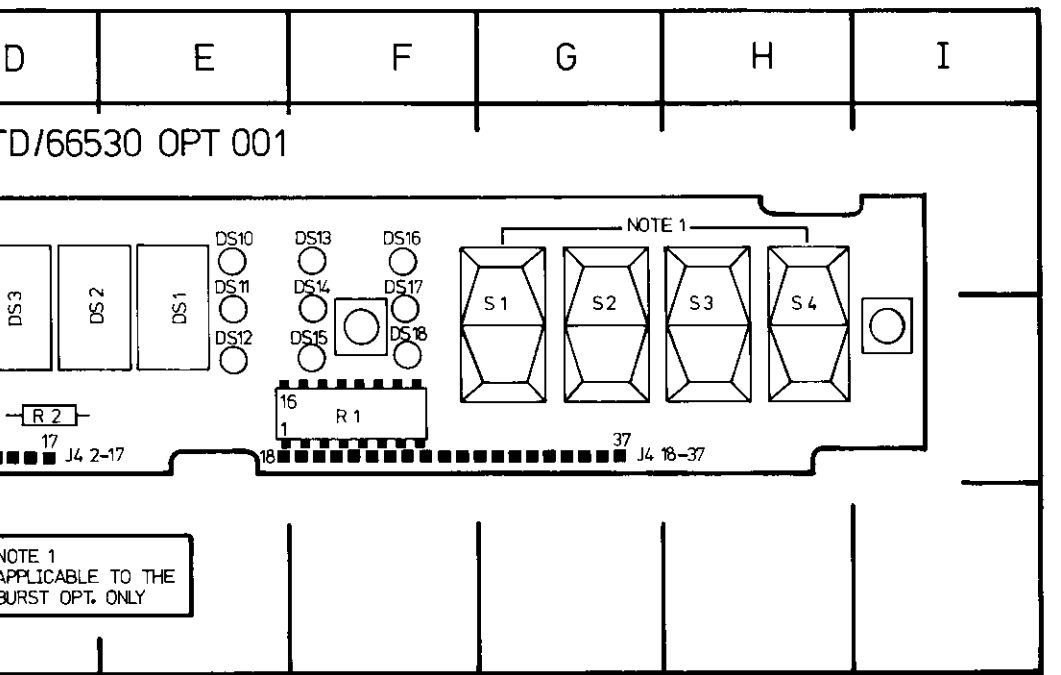

GRID
LOC

G2
D2
I2
I2
B/C2

SERVICE BLOCK 5
DISPLAY BOARD A10 (A30) 5

THEORY OF OPERATION

All parameters of the 8111A except the burst number are voltage controlled via the front panel settings. The resulting control voltages are measured by a DVM based on an A–D converter IC–U1. This "DVM" uses the dual slope integration method of A–D conversion and the operating principle is shown in Figure 8–5–1.

The operation is as follows: The signal input voltage is connected to the integrator for a time period of 1000 oscillator cycles, this is therefore the integration time T_I .During this time, C_{int} is charged up linearly starting from 0 volts. At the end of T_I C_{int} will have been charged to a value proportional to the input voltage. The second phase of the dual slope integration involves connecting a fixed reference voltage V_{ref} to the integrator input, this voltage is of opposite polarity to the signal input and results in C_{int} being linearly discharged. At the beginning of this discharge the output from the oscillator is gated into a counter, the gate is disabled when C_{int} has discharged to zero.

Referring to Figure 8–5–2, when the input voltage is equal to the reference the time to discharge C_{int} will be the period for 1000 oscillator cycles and the displayed value will be 1000. When the input voltage = 2 x V_{ref} then the discharge time will be 2000 cycles and the corresponding display will be 2000 etc.

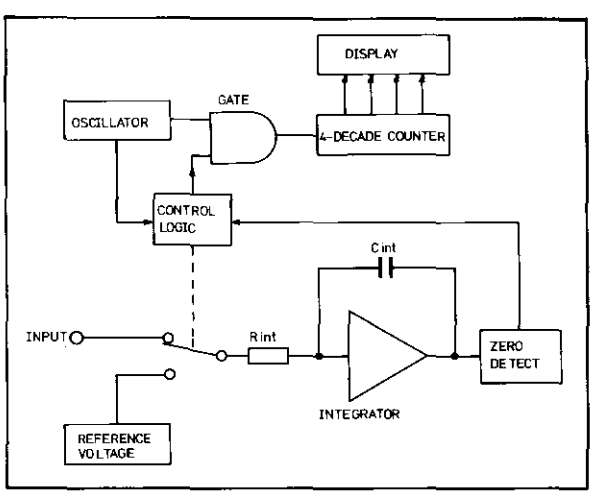

Figure 8–5–1. Simplified Dual Slope Integrating DVM

The DVM IC has differential inputs for both the input and the reference voltages. The Ref. low input is always connected to ground and therefore the displayed value is expressed by:

$$\text{Displayed Value} = \frac{V_{in\ Hi} - V_{in\ Lo}}{V_{ref\ Hi}} \cdot 1000$$

Since various parameters have to be displayed it is necessary to vary the value of V_{ref} and/or interchange it with the V_{in}. The following paragraphs detail how this is done for all parameter display requirements.

Amplitude, Offset and Frequency

To display these parameters the DVM IC is used in its normal application i.e. V_{ref} = 1 V, the parameter control voltages are fed to the differential inputs of IC and are displayed in their "Oscillator cycle count" equivalent. The decimal point position is controlled by the Control board A7.

Width

The width control voltage is inversely proportional to the width value, therefore, to achieve the correct display value the input signal (control voltage) and the reference voltage for the DVM IC U1 are interchanged.

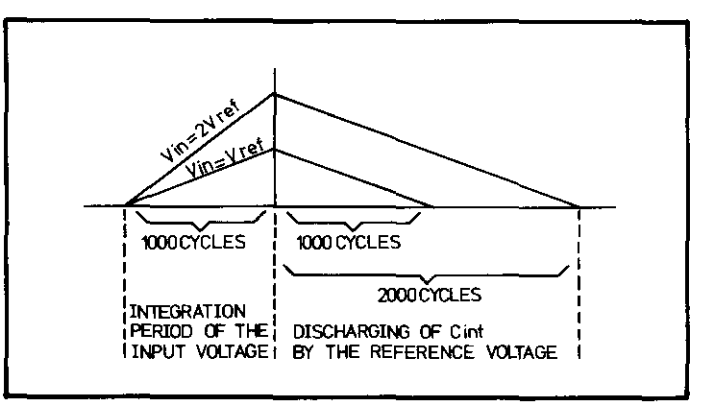

Figure 8–5–2. Dual Slope Integration Measurement Sequence

Duty Cycle

The Duty Cycle is determined by the ratio between the control voltage for the frequency and the voltage V_{up} which controls the I_{up} current source on the VCO board. To display this ratio, V_{up} is used as a variable reference voltage and the frequency control voltage is connected to the input pins of U1.

In fixed duty cycle (50 %) mode a constant 0.505 V voltage is connected to the DVM IC input with a reference voltage of 1 V, this therefore results in 50 being displayed (the last digit is blanked). See Table 8–5–1 for clarification.

Burst (Option 001 only)

The display method for the burst number is a totally digital procedure unlike that for all other parameters and is controlled from the Burst No Control board A9. The theory of operation including the display technique is described in Service Block 6. Table 8–5–1 shows the input conditions at the DVM IC U1 for all parameter displays.

DVM IC U1

If the fault is that the display readout remains fixed when any vernier control is varied but the decimal point position and unit indicators may be varied then A10 U1 oscillator is suspect. The correct oscillator output should be as shown below with a frequency of approximately 190 kHz. If there is no output verify that U1 pin 40 is not shorted to ground since this disables the oscillator.

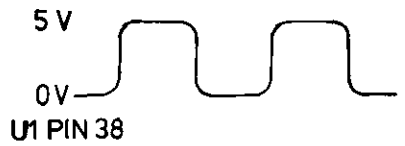

Numeric Display

The display can be checked for correct operation – all segments operatable – by connecting U1 pin 37 to +5 V, all numeric displays should then be illuminated to give a readout of –1888.

TROUBLESHOOTING

General

Since all switching and changing of the reference and input signals for the DVM is done on switch board A11 by A11U12, most cases of incorrect display value are likely to be related to the A11, A12 assembly. A12 is mentioned since the vernier control outputs go via A12 to A11. If the fault concerns the operating mode, decimal point, width or frequency unit indicating LEDs and not the numeric displays then the Control Board A7 should be suspected.

Table 8–5–1. Display Required/DVM Input Voltages

Displayed Parameter	DVM Input Voltages			Values shown on the Display = $\frac{V_{HI}-V_{LO}}{V_{REF}} \cdot 1000$
	INPUT HI pin 31	INPUT LO pin 30	REF HI pin 36	
FREQUENCY	V_{Freq} 0.1 V ... 1 V	gnd	+1 V	10.0 ... 100.0
FIXED 50 % DUTY CYCLE	0.505 V	gnd	+1 V	50 } last digit switched off
VARIABLE DUTY CYCLE	V_{Freq} 40 mV...0.4 V	gnd	V_{up} 40 mV...0.4 V	10 ... 90 } last digit switched off
WIDTH	+0.4 V	gnd	V_{Width} 4 V ... 0.4 V	10.0 ... 100.0
AMPLITUDE	gnd	V_{Ampl} −0.16 V ...−1.6 V	+1 V	1.60 ... 16.00
OFFSET	gnd	V_{offs} +0.8 V ... −0.8 V	+1 V	−8.00 ... 8.00
BURST	2.2 V	gnd	+1 V	1...1999

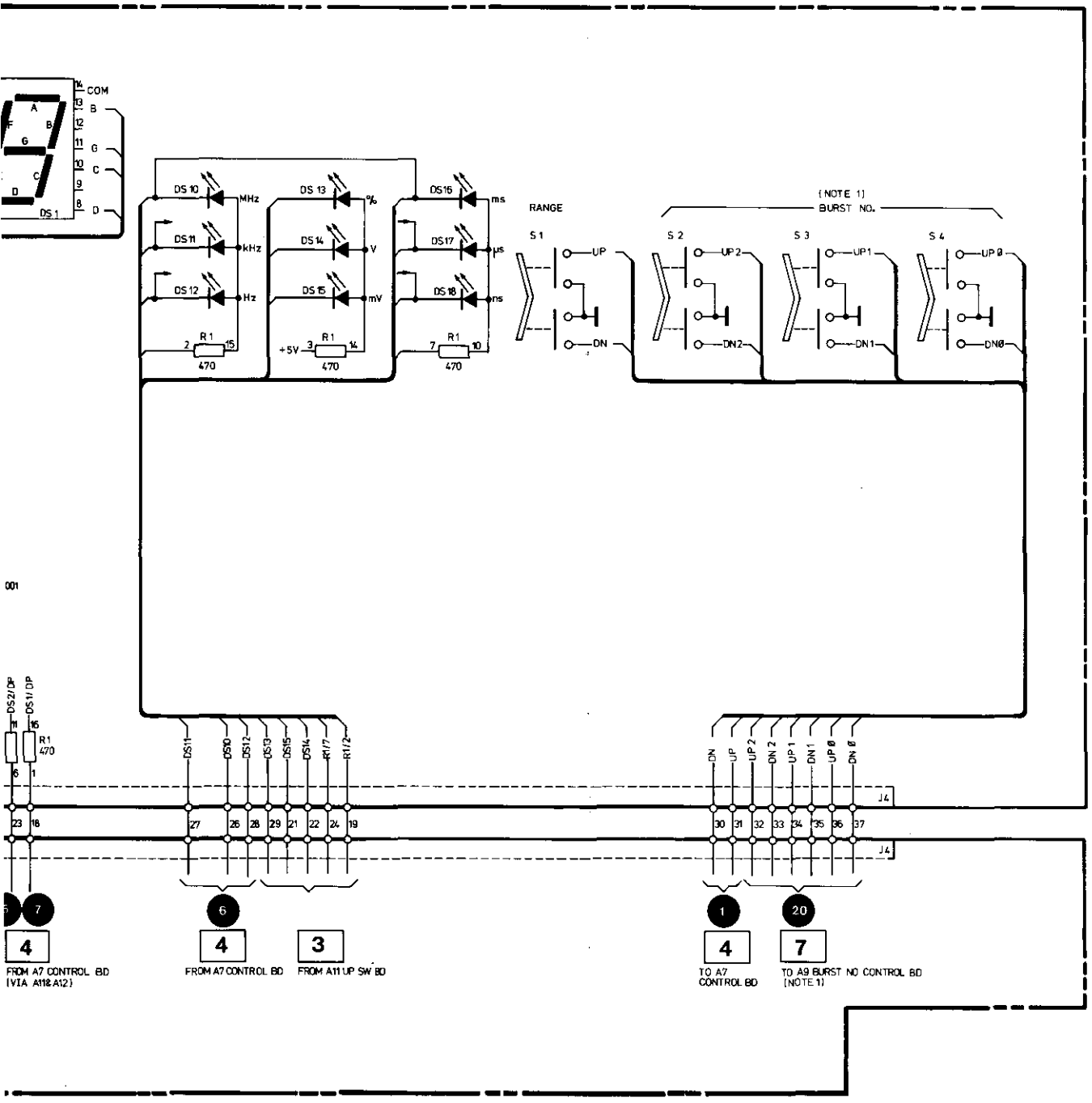

DISPLAY BD A10 (OPT 001 A30)

5

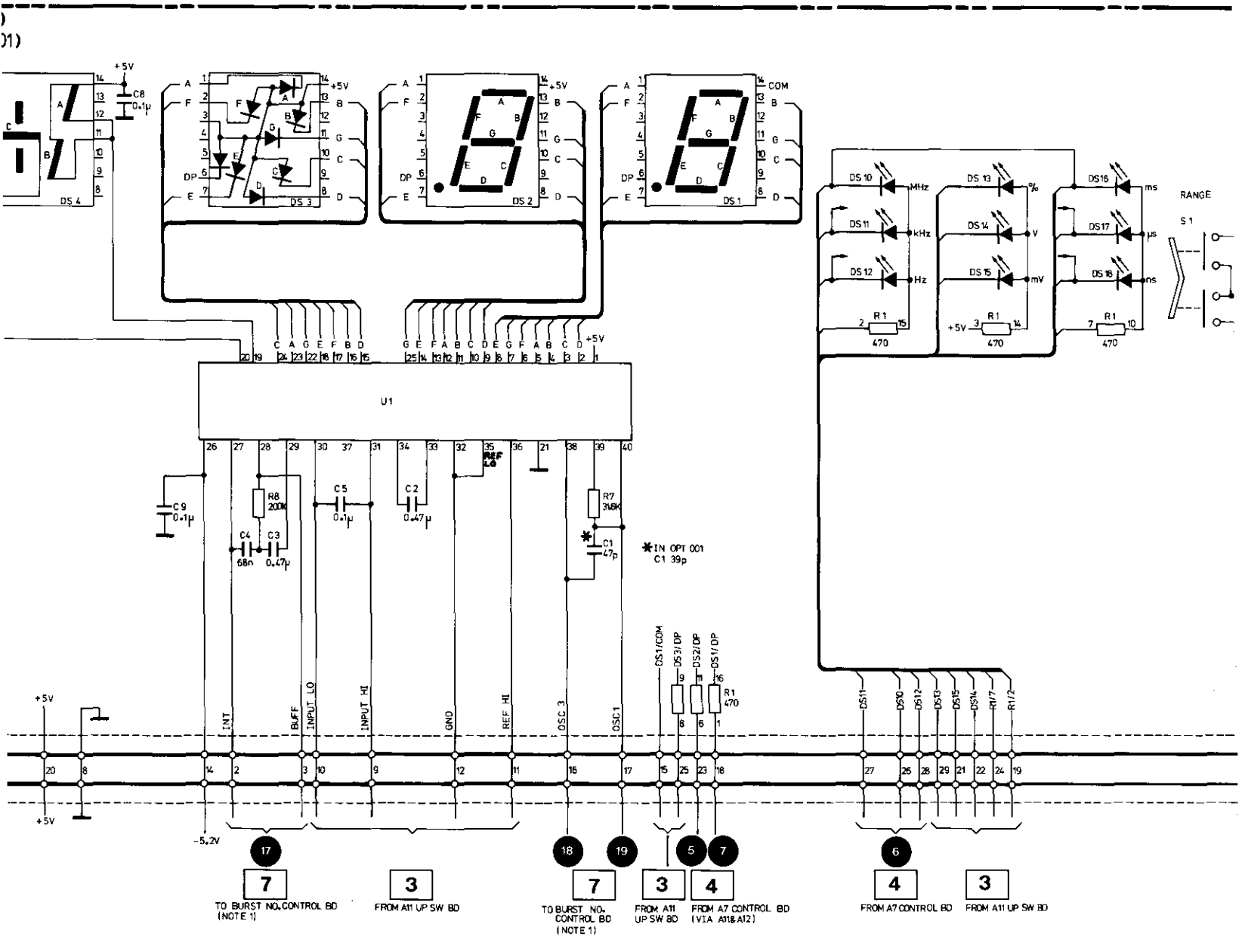
DS 4
DS 3
DS 2
DS 1
C8 0.1µ
U1
C9 0.1µ
R8 200K
C4 68n
C3 0.47µ
C5 0.1µ
C2 0.47µ
R7 3.9K
C1 47p
*IN OPT 001 C1 39p
DS10 MHz
DS11 kHz
DS12 Hz
DS13 %
DS14 V
DS15 mV
DS16 ms
DS17 µs
DS18 ns
R1 470
RANGE
S1
INT
BUFF
INPUT LO
INPUT HI
GND
REF HI
OSC 3
OSC 1
DS1/COM
DS3/DP
DS2/DP
DS1/DP
-5.2V
TO BURST NO. CONTROL BD (NOTE 1)
FROM A11 UP SW BD
TO BURST NO. CONTROL BD (NOTE 1)
FROM A11 UP SW BD
FROM A7 CONTROL BD (VIA A11 & A12)
FROM A7 CONTROL BD
FROM A11 UP SW BD

A 10 BD AY DISPLAY 08111-66510 (STANDARD)
A 30 BD AY DISPLAY 08111-66530 (OPTION 001)

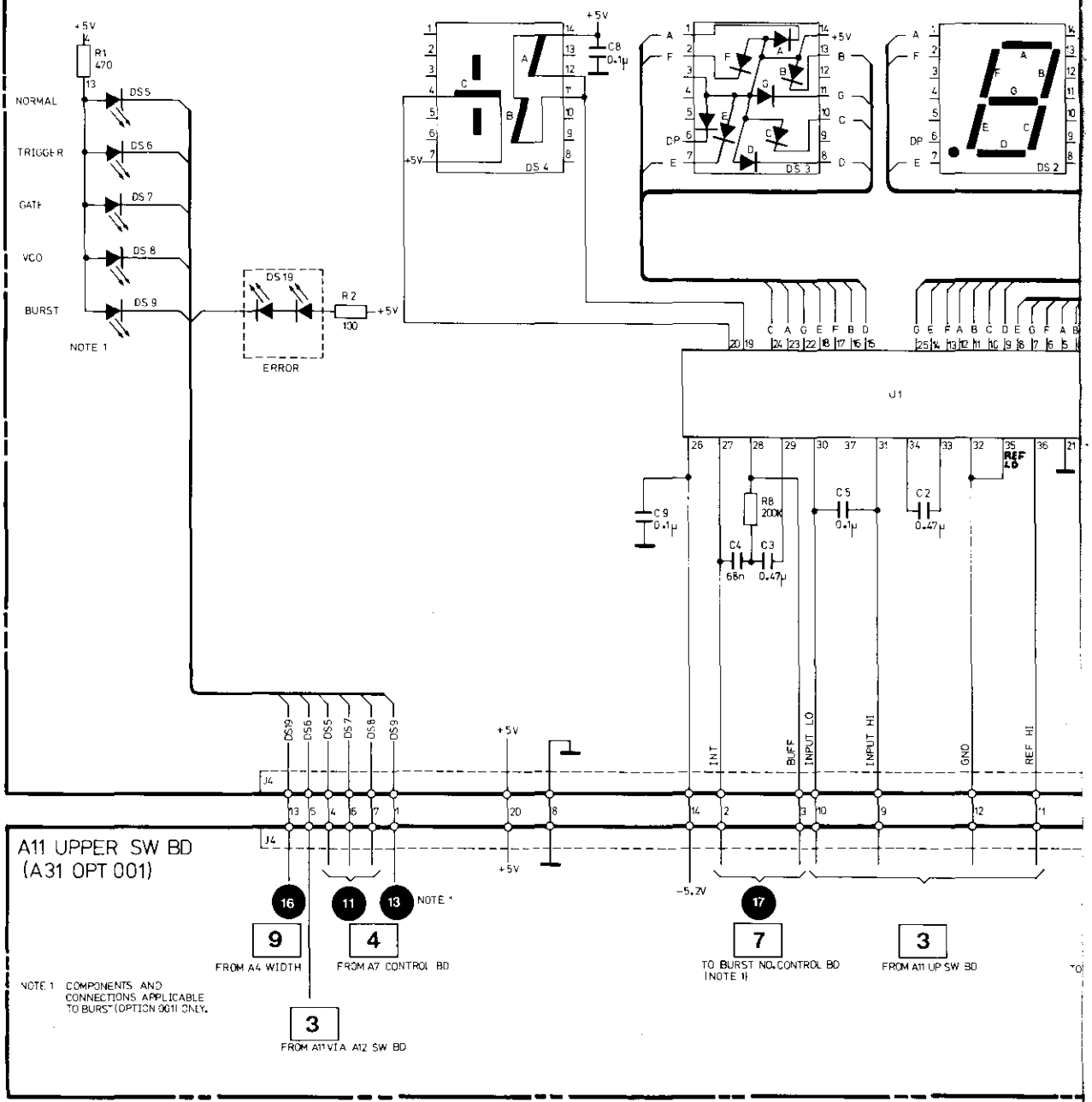

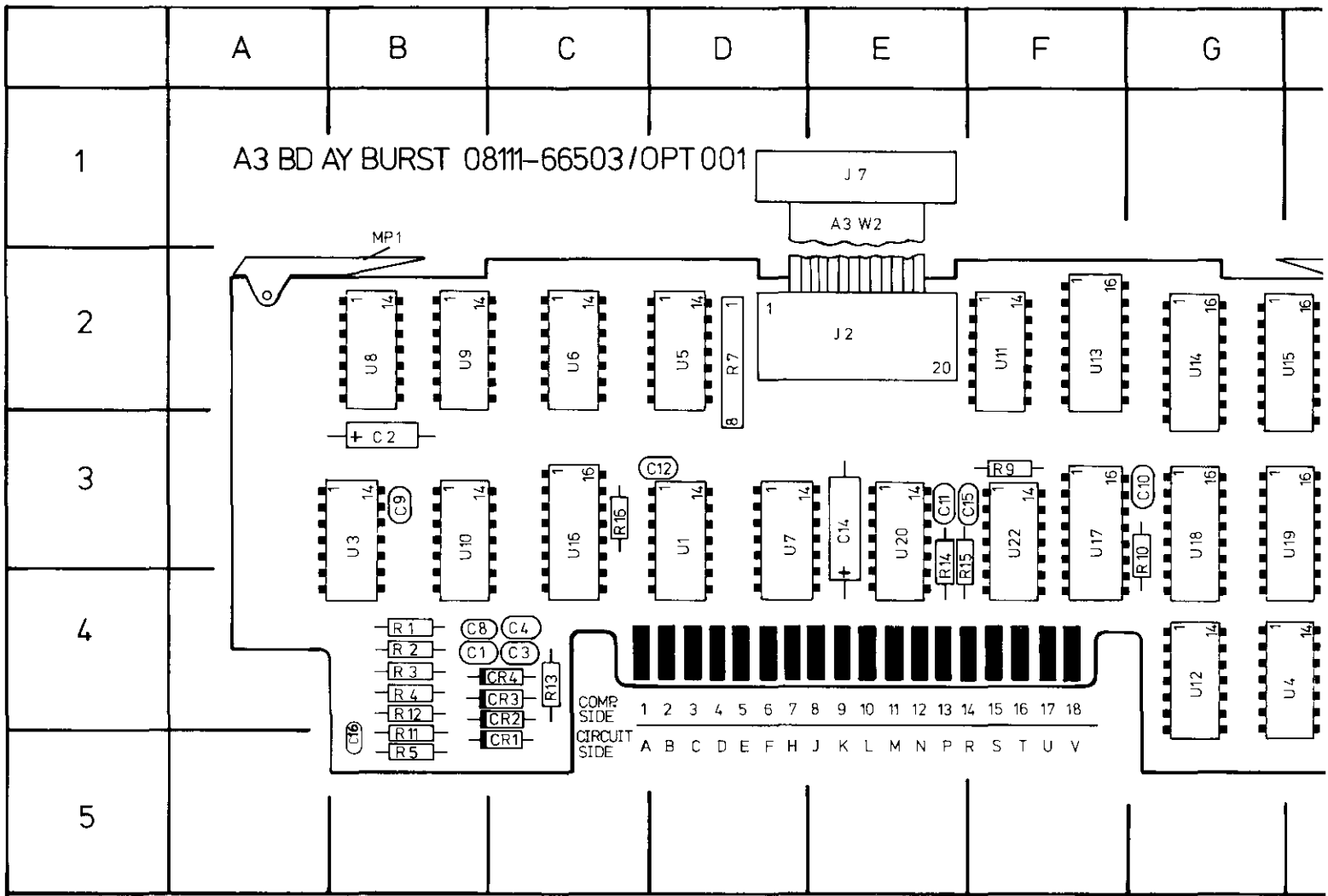

REF DESIG	GRID LOC	REF DESIG	GRID LOC	REF DESIG	GRID LOC	REF DESIG	GRID LOC
C1	B4	CR1	C5	R12	B4	U11	F2
C2	B3	CR2	C4	R13	C4	U12	G4
C3	C4	CR3	C4	R14	E3	U13	F2
C4	C4	CR4	C4	R15	E3	U14	G2
C5	H2	R1	B4	R16	C3	U15	H2
C6	H2	R2	B4	U1	D3	U16	C3
C7	H4	R3	B4	U2	H3	U17	F3
C8	B4	R4	B4	U3	B3	U18	G3
C9	B3	R5	B5	U4	H4	U19	H3
C10	G3	R6	H2	U5	D2	U20	E3
C11	E3	R7	D2	U6	C2	U21	H4
C12	D3	R8	H2	U7	D3	U22	F3
C13	H3	R9	F3	U8	B2	C16	B5
C14	E3	R10	G3	U9	B2		
C15	E3	R11	B5	U10	B3		

6

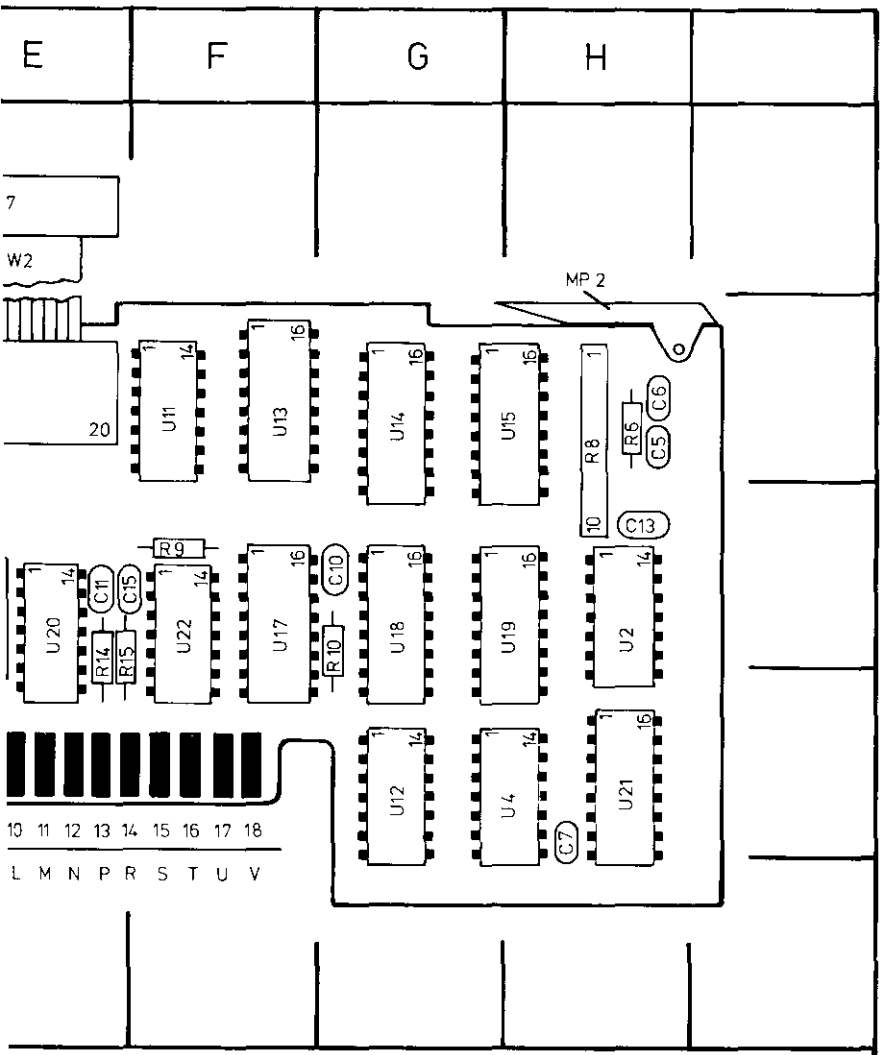

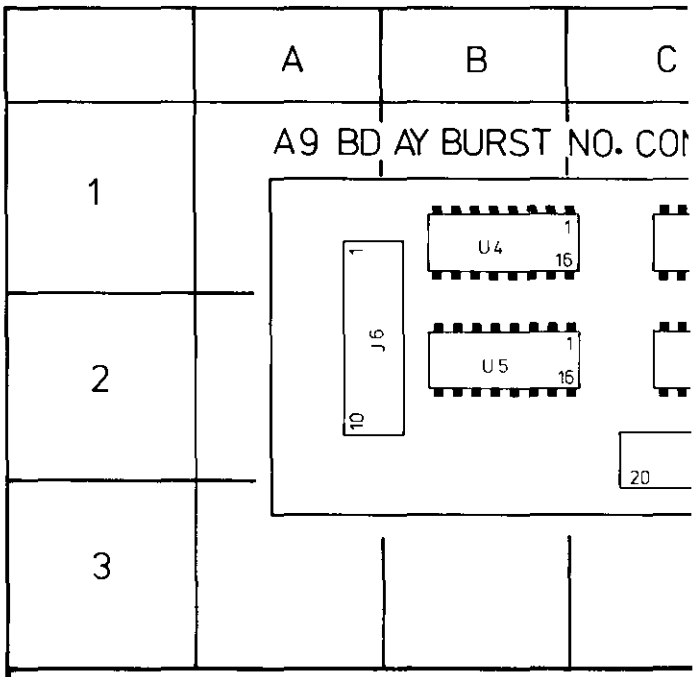

IG	GRID LOC
	F2
	G4
	F2
	G2
	H2
	C3
	F3
	G3
	H3
	E3
	H4
	F3
	B5

REF DESIG	GRID LOC	REF DESIG	GRID LOC
C1	D1	U4	B1
Q1	F2	U5	B2
R1	F2	U6	C2
R2	F1	U7	F1
R3	E1		
R4	F2		
R5	F2		
R6	E2		
R7	E2		
R8	E1		
R9	E2		
R10	F2		
U1	F2		
U2	E1		
U3	C1		

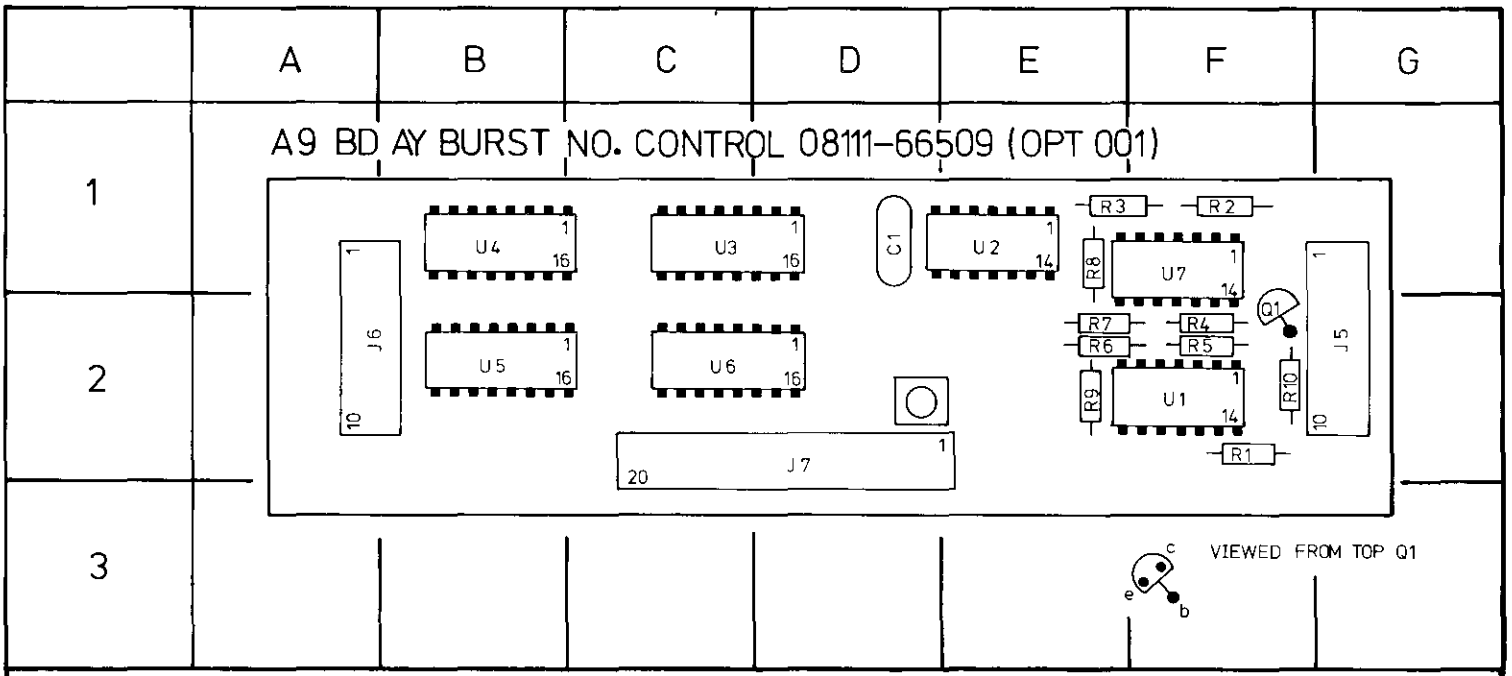

REF DESIG	GRID LOC	REF DESIG	GRID LOC
C1	D1	U4	B1
Q1	F2	U5	B2
R1	F2	U6	C2
R2	F1	U7	F1
R3	E1		
R4	F2		
R5	F2		
R6	E2		
R7	E2		
R8	E1		
R9	E2		
R10	F2		
U1	F2		
U2	E1		
U3	C1		

SERVICE BLOCK 6
BURST BOARD A3 [6]
BURST NO. CONTROL A9 [7]

THEORY OF OPERATION

General

Refer to Figure 8–6–1, in BURST mode, a preset number of cycles is output by the 8111A, this requires a store or CONTROL COUNTER for the set "BURST NO" and a BURST COUNTER which is loaded with the same number and then counted down (or decremented) by pulses from the VCO (A5) after commencement of the burst.

At the start of a burst sequence, following a trigger signal, the VCO is enabled and outputs cycles as in other modes, pulses (BURST CLOCK) are also fed back to the burst counter to decrement the count to one. A "BURST OFF" signal is produced after this condition is detected and this disables the VCO after completion of the final cycle. During this final cycle the burst counter is re-loaded with the burst number from the control counter.

Board A9, the Burst Number Control, has no significance in the actual burst sequence, it serves to interface the burst number data with the Display board and the rocker switches to A3, it will be described later.

OPERATION

The following operational description of the BURST BOARD A3 is in four sections:

1. The Control Counter
2. Loading the Burst Counter
3. Burst on
4. End of count down – Burst off

Figure 8–6–2 should be referred to as necessary to aid understanding of the descriptions.

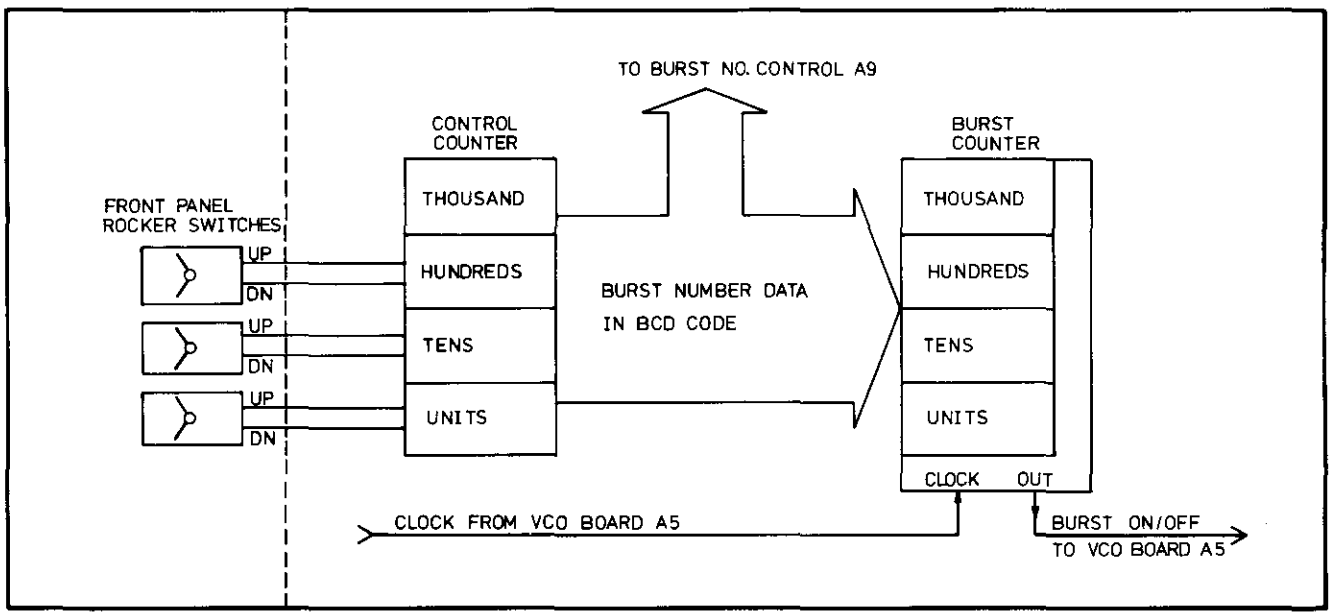

Figure 8–6–1. Burst Block Diagram

1. The Control Counter

This consists of a four stage counter — three cascaded BCD counters U13, U14 and 15 for the "units, tens and hundreds" and a flip-flop U16A for the thousand. At instrument switch on the counter is preset to one (001 displayed when BURST NO buttons pressed) via a signal "PRESET" from the Control board. Operation of the BURST NO rocker switches causes the output of U9C to go high for each "push", the signal is debounced via U10D etc and input, via U6C, to the enabled control counter device. This is done by using the operated rocker switch output (via U6A, B or D) and/or a CARRY output signal to enable, via U4C (units), U10A (tens) or U11D (hundreds), the required counter stage. The output from U6C (control counter clock)will be disabled from clocking the stages (via U11C, B and A) if an unallowed count would result e.g. — if present displayed count is 1985 and the hundreds rocker switch is operated in the 'UP' mode, then only one increment — to 1995 — is possible since the next would be 2005 which is not allowed. The circuit comprising U8D, U9A and B and U10B etc. performs the counter status monitoring and prevents unalowed carry up or down action.

The normal carry up or down function is enabled by U10A, U11D and U4C, C7 and R8 ensure that the counter is set to 001 and not 000 when the "tens" or hundreds count is decremented from 010 or 100 respectively. U8C prevents a 000 setting of the counter by enabling a preset signal for the whole counter to be produced whenever the units switch is pressed to the down position at the 001 counter setting.

The output of U5B enables either an up or down count sequence, in a rocker switch "down" position U5B output is low for DN enable and an "up" position enables UP.

The oscillator is enabled and outputs a pulse train when a rocker switch is pressed either "up or down" for longer than the time constant determined by R3 and C2.

2. Loading the Burst Counter

This is done whenever the existing burst number is changed or a burst has been completed and the number needs to be reloaded for a further one. The Burst Counter contents are automatically decremented to zero during the cycle. Since there are two different loading/or reloading situations they will be separately described as:

2—1 Loading a new Burst Number

2—2 Reloading after burst completion

2—1 Loading a new Burst Number

The negative going edge of the Control Counter clock pulse triggers U21B (pin 9) and its Q output enables the load function of U17 (active low). Delay — R6, C5 and U2D, U22 generate the required clock pulse for U17 which then loads the "units data" into U17. The load enable signal for the "tens", "hundreds" and "thousands" data is U21B $\overline{Q}$.

2—2 Reloading after burst completion

At the end of a burst cycle, when the count has reached 001, the ONE DETECT circuit output (U22C pin 8) goes low and enables the LOAD of U17. On receipt of next positive going clock transition U17 will be reloaded with the units data.

The other counters are reloaded by a pulse via U21A after U20BQ changes from high to low at burst completion.

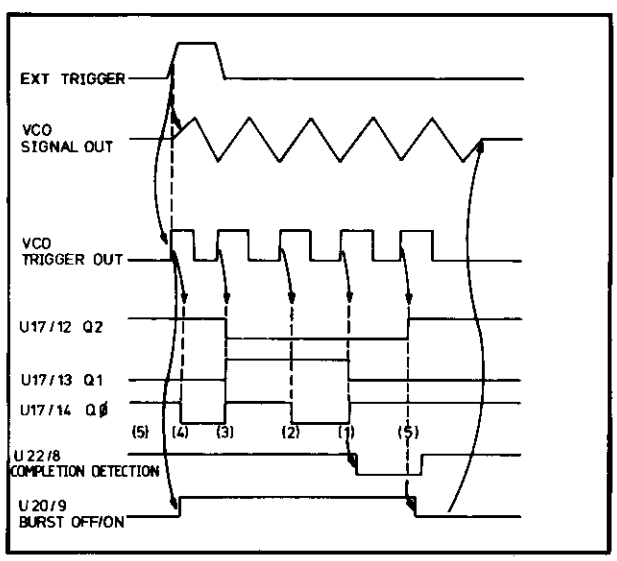

Figure 8—6—2. Burst Timing Diagram (Burst Number = 5)

3. Burst on

On receipt of an trigger signal the VCO (board A5) outputs a signal, this is fed to A6 for ECL to TTL conversion and then input as "BURST CLOCK" to A3U20 and U22C. If the Burst Counter is not set to 001 and no rocker switch is being operated, then U20B D-input is high and the first clock pulse will cause the Q output to go high. The signal BURST ON/OFF is fed back to the VCO and enables the free running mode of A5U1. Also, the burst clock signal now starts to decrement the counter via U22C.

4. End of count down – Burst off

The One Detector circuit output, U22C pin 8, is changed from its normal high to a low level when the stored burst count reaches one (001). Until this point, U22C pin 8 at high has maintain the BURST ON/OFF signal at high (Burst on). At the receipt of the next clock pulse, which initiales the last burst cycle, the level at U22C 'D' is transferred to the Q output so disabling burst via the VCO BURST ON input. This is illustrated by Figure 8–6–2.

BURST NUMBER CONTROL BOARD A9

OPERATION

The function of this board is to control the display of the burst number as set in the control counter of A3. It does this basically by counting the number of cycles output by the Display board DVM oscillator and disabling it when the number equals the set burst number. To help understand how this is achieved it is necessary to understand the basic theory of dual slope integration, and its application in the Display board operation, this is given in Service Block 5.

The timing diagram, Figure 8–6–3 should be referred to when reading the following explanation. The principle of operation is that the DVM IC integrator is first supplied with a fixed input (2.2 V) voltage to enable it to ramp up in the normal manner for 1000 cycles time period. The discharge phase is now started and the oscillator disabled via Q1 when the number of cycles output equals the burst count number.

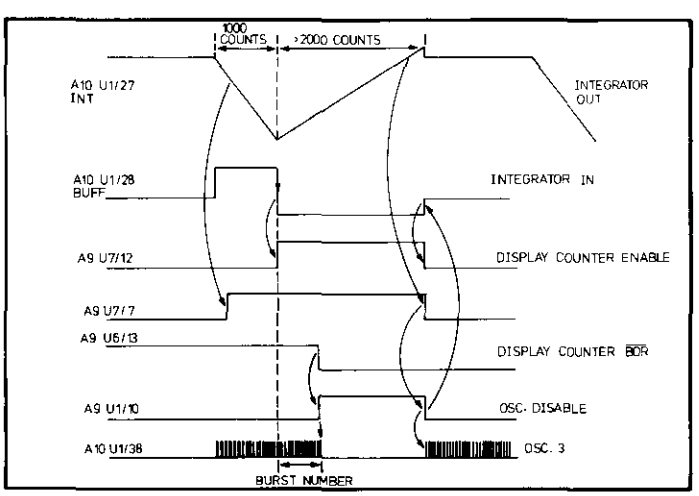

Figure 8–6–3. Burst No. Display Timing Diagram

Since the oscillator has been disabled the normal "end of ramp down" detector circuit within the IC cannot be used (the digital control logic is effectively at standstill without a control clock) and an external circuit, U7B etc., is used instead. U7B functions as a Schmitt trigger and causes Q1 to be switched off, so renabling the oscillator, when the DVM IC integrator output (signal "INT") euqals the threshold level of about 0.1 V. The burst number is now displayed and the count and display sequence repeated as illustrated by Figure 8–6–3.

Devices U2A and B provide a divide by 4 function which is necessary since the DVM IC clock signal is normally divided by 4 internally and the burst number display counter must therefore be supplied with the same frequency.

TROUBLESHOOTING (A3 and A9)

For the purpose of troubleshooting, the complete burst circuitry can be considered as three functional sections:

1. Burst number setting circuitry (rocker switches, oscillator, control counter, carry/borrow logic).
2. Burst Counter, burst completion detection.
3. Burst number control (A9).

To isolate the faulty components the following general troubleshooting information links various possible fault conditions to the most likely cause:

If it is not possible to set the required burst number on the display and at the 8111A output by operating the appropriate rocker switches, then, a fault in the burst number setting circuitry of A3 is the most likely cause. If however, either the display or the output is wrong but not both, then a check on the operation of A3 Control Counter will assist in identifying the likely fault area. This is done by checking whether the outputs of U13 to U16 have the same decimal value as the display readout. If the values differ and the 8111A burst output is correct then suspect board A9, if they are identical but the output burst number is incorrect then the Burst Counter or completion detector are suspect.

Burst Counter

The correct operation of the Burst Counter can be verified with the following test procedure, refer to Figure 8–6–4 for the waveform and timing data.

1. Disconnect A3R10.
2. Set 8111A:

   OPERATING MODE .....NORMAL
   WAVEFORM .....Square
   FREQUENCY RANGE .....100–1000 kHz
   FREQUENCY (VERNIER) .....1000 kHz

3. Confirm that the waveforms and timing data as given in Figure 8–6–4 are correct. Use oscilloscope internal trigger on positive slope setting.

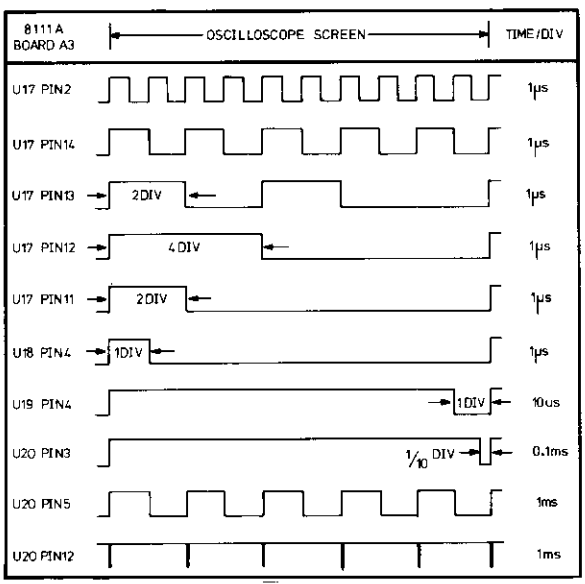

Figure 8–6–4. A3 Troubleshooting Data

Burst No. Control A9

The special "short" extender board should be used when troubleshooting A9, and A9R10 must be disconnected to leave A9Q1 open base. This enables "free run" operation of the Burst No. Control Counter.
Frequency and Duty/Width pushbuttons pressed.

The Schmitt triggers U7A and U7B can be checked for correct operation with the aid of Figure 8–6–5 waveforms.

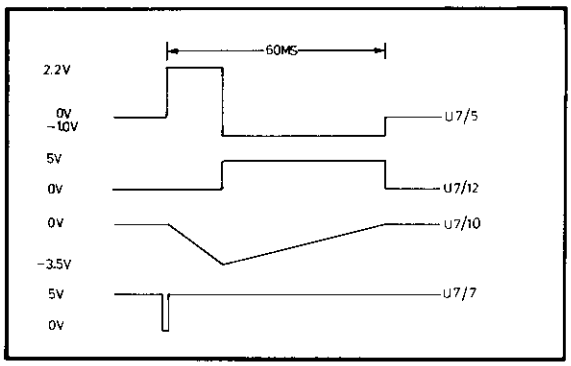

Figure 8–6–5. Burst No. Control A9 Troubleshooting Waveforms

The Burst Number Display Counter operation can be checked with the following test procedure.

1. Connect U7 pin 4 to +5 V. Confirm that U7 pin 12 goes to +5 V.
2. Connect U7 pin 9 to +5 V. Confirm that U7 pin 7 goes to +5 V.
3. Check that the waveform and timing data as given in Figure 8–6–6 is correct . Use oscilloscope internal trigger on positive slope setting.

NOTE: The "spikes" (U6 pin 4 etc.) might need to be verified with the aid of a TTL probe if difficult to see on the oscilloscope screen.

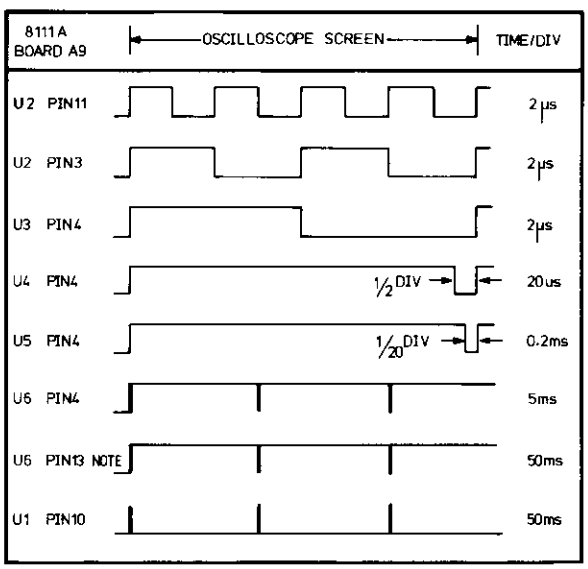

Figure 8–6–6. Burst No. Display Counter Troubleshooting Data

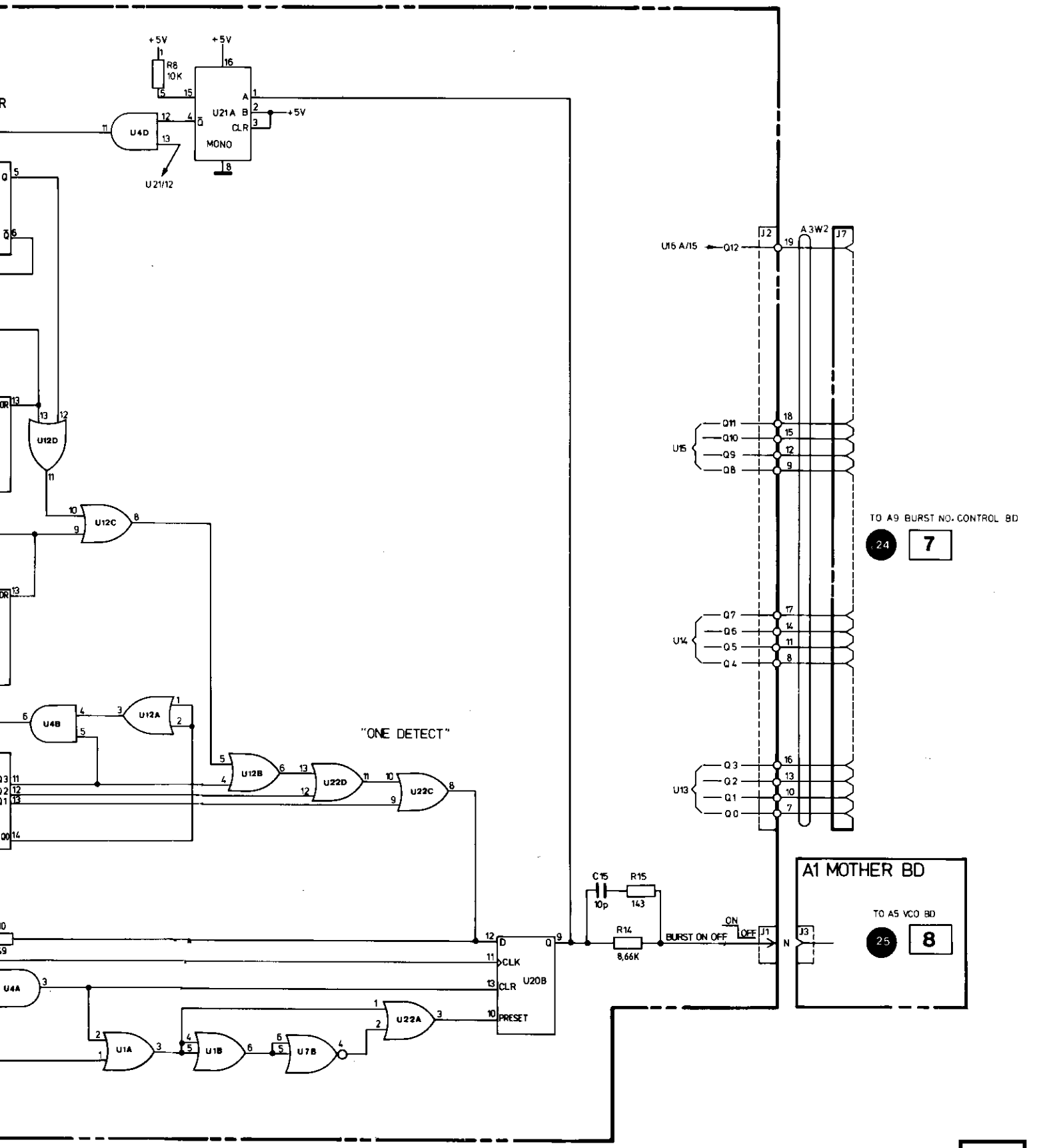

BURST BOARD A3

6

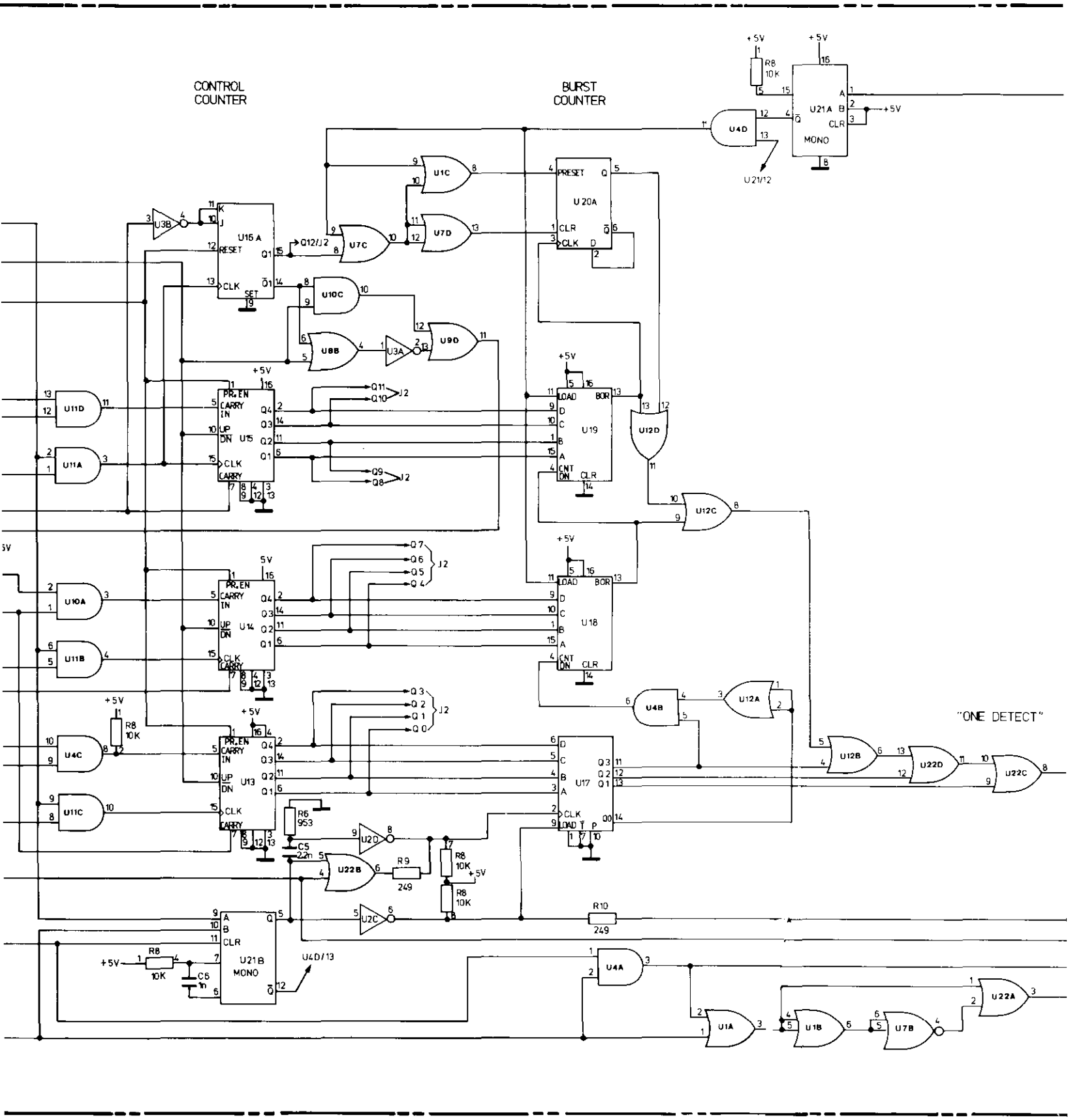
CONTROL COUNTER
BURST COUNTER
"ONE DETECT"
U16 A
U15
U14
U13
U20A
U19
U18
U17
U21A
U21B
MONO
U21/12
U4D/13
Q12/J2
Q11
Q10
Q9
Q8
Q7
Q6
Q5
Q4
Q3
Q2
Q1
Q0
J2
R8 10K
R6 953
C5 2.2n
R9 249
R10 249
C6 1n
+5V

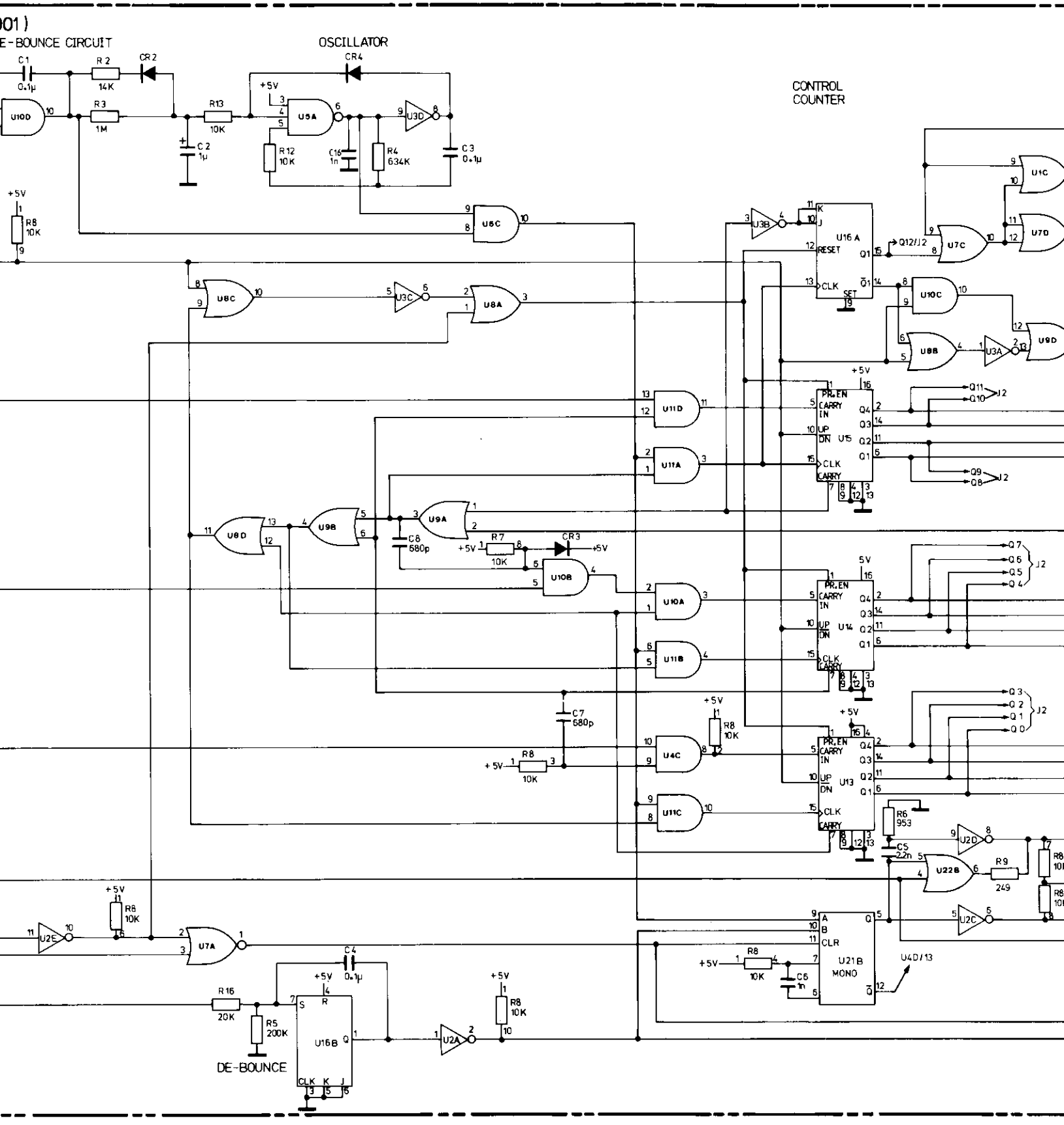
001)
E-BOUNCE CIRCUIT
OSCILLATOR
CONTROL
COUNTER
DE-BOUNCE
C1 0.1µ
R2 14K
CR2
R3 1M
R13 10K
C2 1µ
+5V
U5A
U3D
CR4
R12 10K
C16 1n
R4 634K
C3 0.1µ
U10D
R8 10K
U6C
U8C
U3C
U8A
U3B
U16A
RESET
CLK
SET
Q12/J2
U7C
U1C
U7D
U10C
U8B
U3A
U9D
U11D
U11A
U15
PR.EN
CARRY IN
UP
DN
CLK
CARRY
Q11
Q10
Q9
Q8
U8D
U9B
U9A
C8 680p
R7 10K
CR3
U10B
U10A
U11B
U14
Q7
Q6
Q5
Q4
C7 680p
R8 10K
U4C
U11C
U13
Q3
Q2
Q1
Q0
R6 953
C5 2.2n
U2D
U22B
R9 249
U2C
U2E
U7A
C4 0.1µ
R16 20K
R5 200K
U16B
U2A
U21B
MONO
A
B
CLR
C6 1n
U4D/13

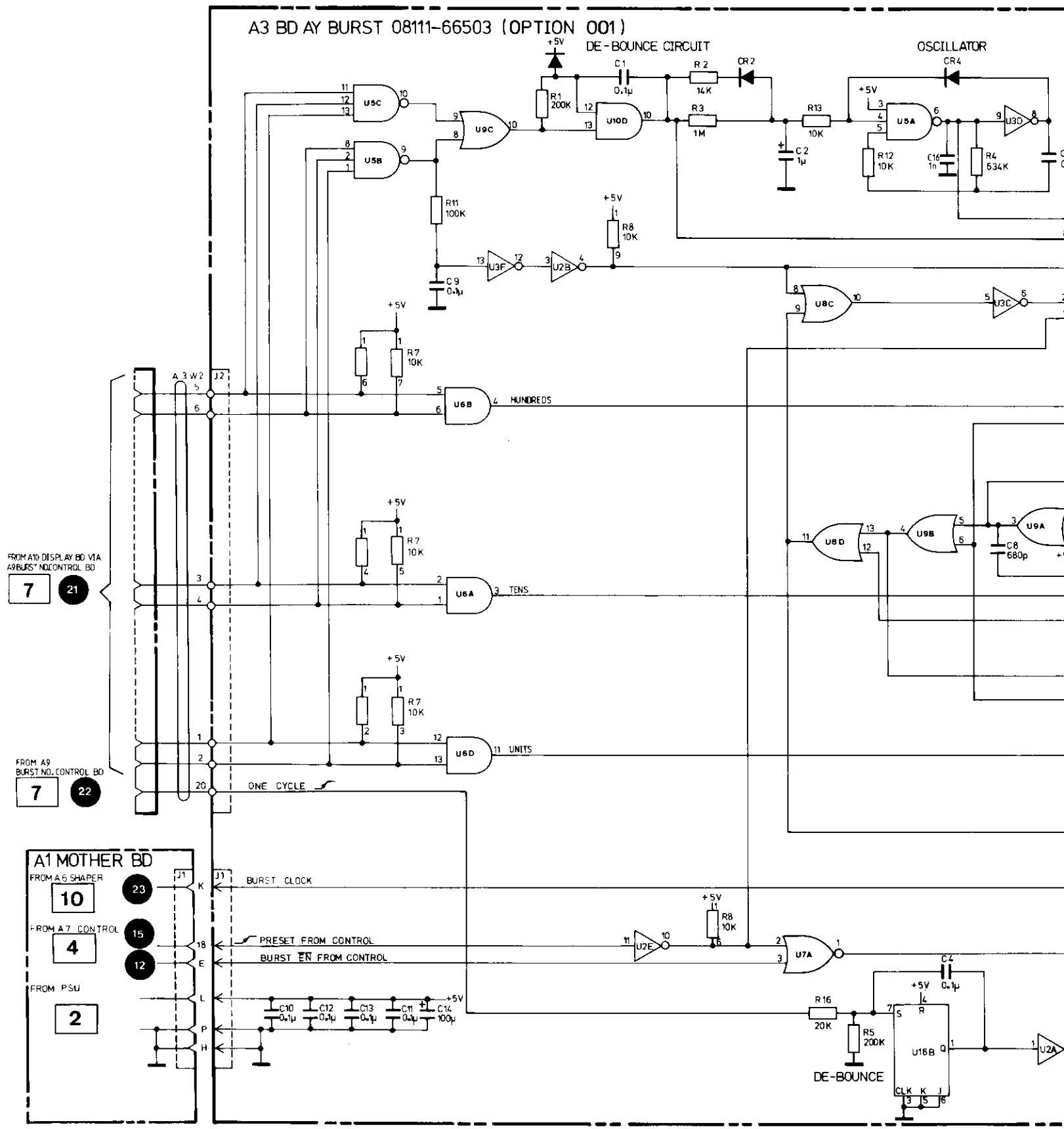
A3 BD AY BURST 08111-66503 (OPTION 001)
DE-BOUNCE CIRCUIT
OSCILLATOR
U5C
U5B
U9C
U10D
U5A
U3D
U3F
U2B
U8C
U3C
U6B
HUNDREDS
U6A
TENS
U6D
UNITS
U8D
U9B
U9A
ONE CYCLE
FROM A10 DISPLAY BD V1A
A9 BURST NO. CONTROL BD
FROM A9
BURST NO. CONTROL BD
A1 MOTHER BD
FROM A6 SHAPER
BURST CLOCK
FROM A7 CONTROL
PRESET FROM CONTROL
BURST EN FROM CONTROL
FROM PSU
U2E
U7A
U16B
U2A
DE-BOUNCE

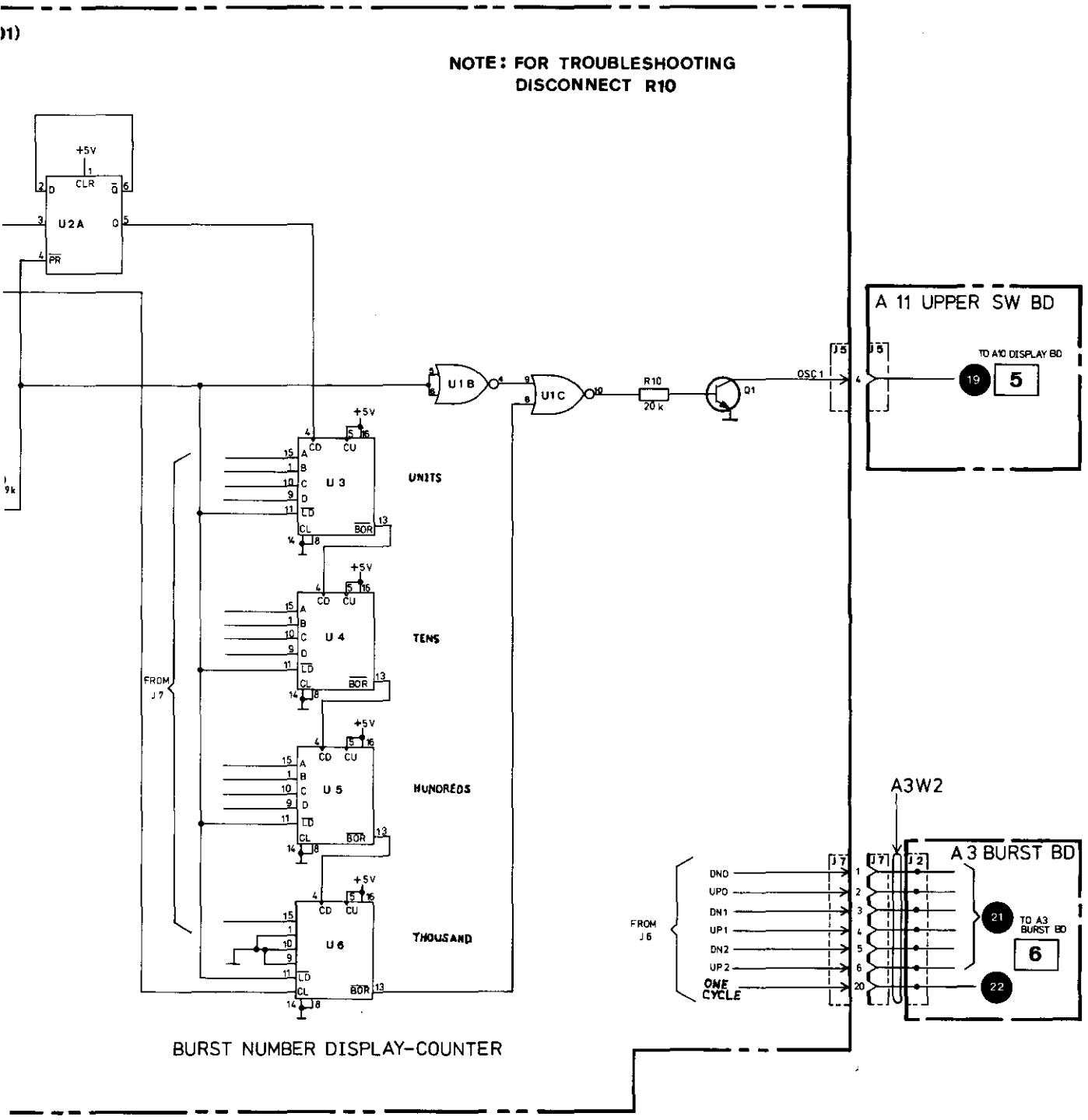

BURST NO. CONTROL A9

7

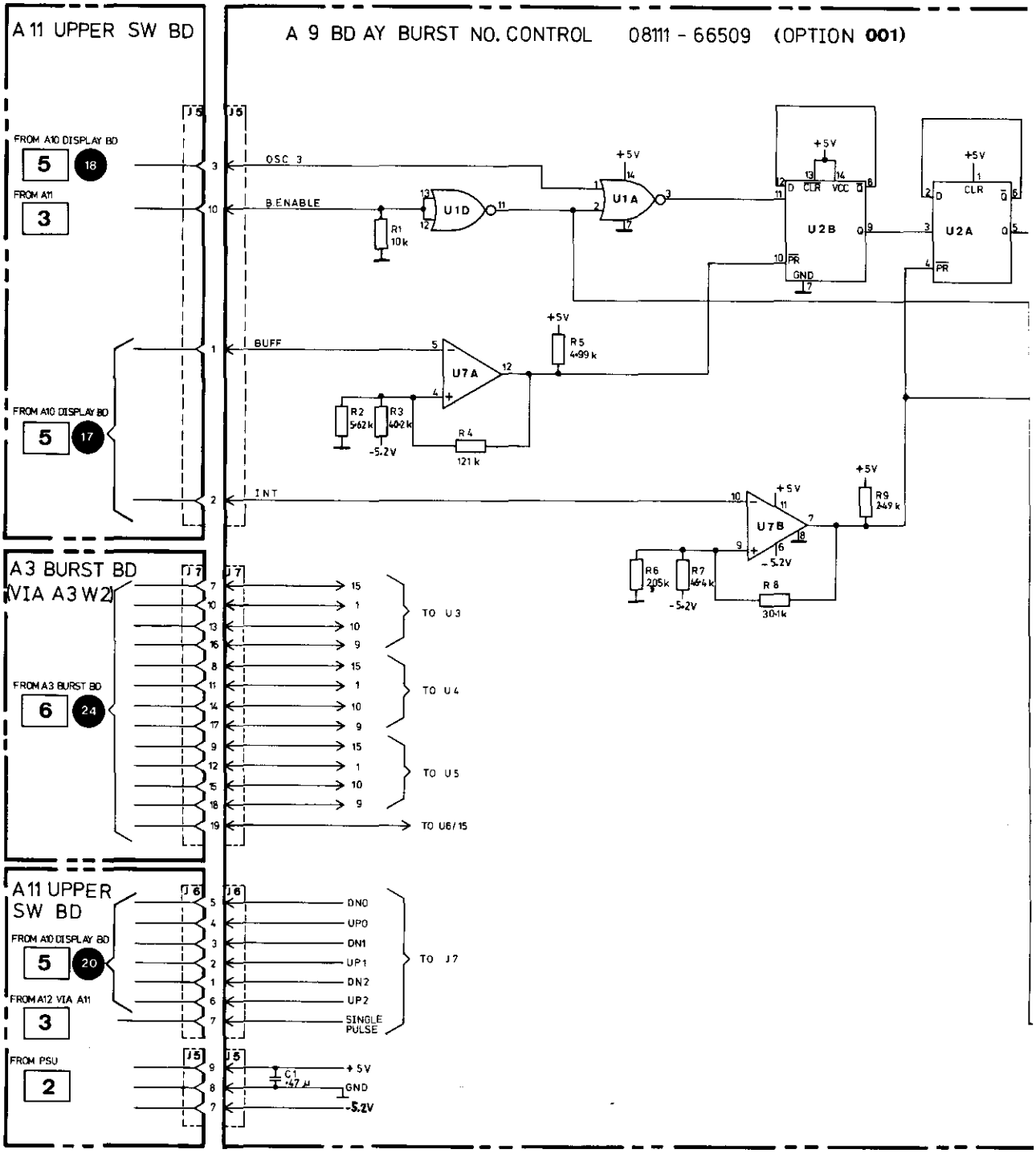
A 11 UPPER SW BD
A 9 BD AY BURST NO. CONTROL 08111 - 66509 (OPTION 001)
FROM A10 DISPLAY BD
5
18
FROM A11
3
OSC 3
B.ENABLE
R1 10k
U1D
U1A
+5V
U2B
U2A
CLR
VCC
GND
PR
BUFF
U7A
R5 4·99 k
R2 5·62 k
R3 40·2 k
R4 121 k
-5.2V
FROM A10 DISPLAY BD
5
17
INT
U7B
R9 249 k
R6 2·05 k
R7 46·4 k
R8 30·1 k
A3 BURST BD
(VIA A3 W2)
FROM A3 BURST BD
6
24
TO U3
TO U4
TO U5
TO U6/15
A11 UPPER
SW BD
FROM A10 DISPLAY BD
5
20
FROM A12 VIA A11
3
DN0
UP0
DN1
UP1
DN2
UP2
SINGLE PULSE
TO J7
FROM PSU
2
C1 ·47 µ
+5V
GND
-5.2V

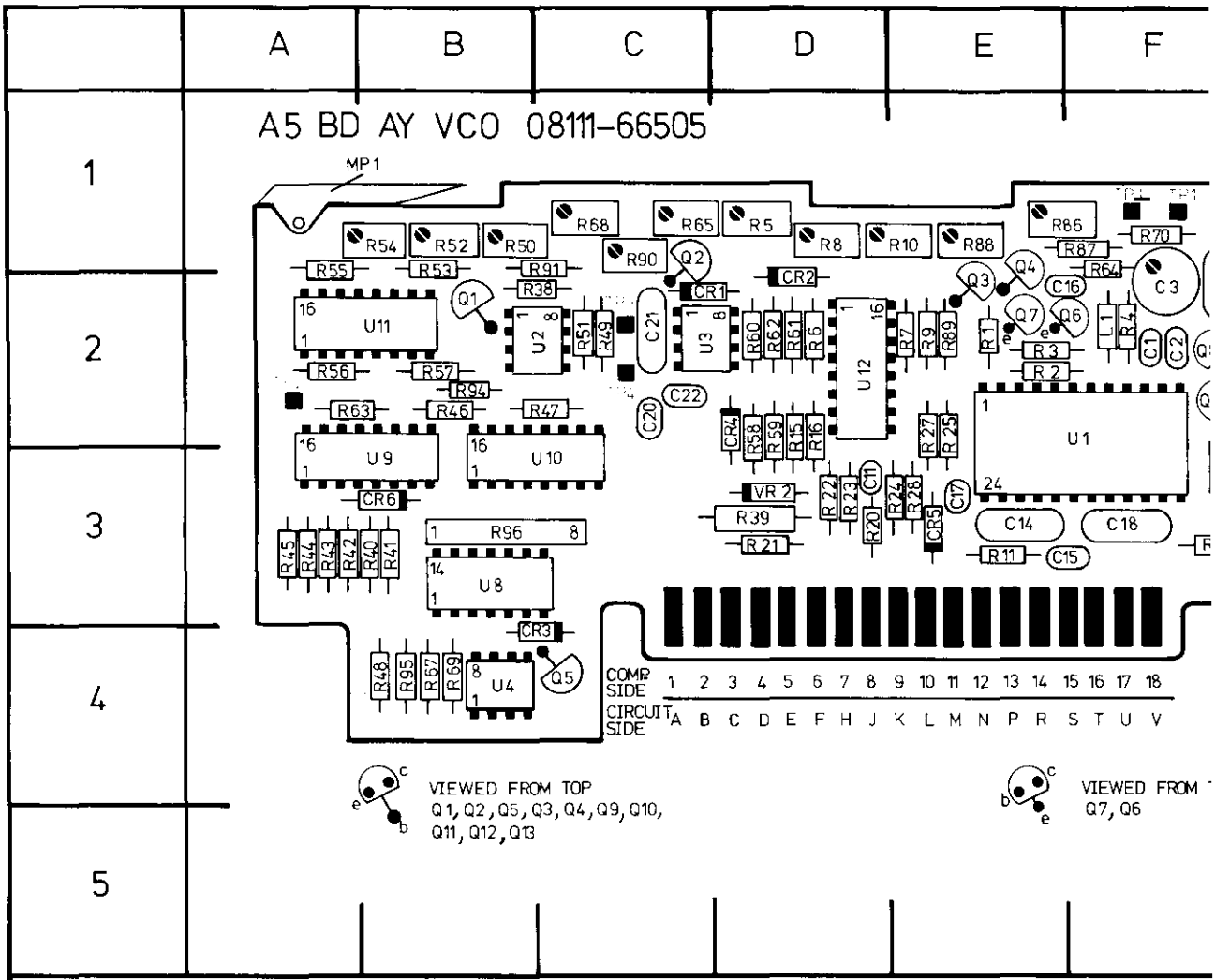

REF DESIG	GRID LOC	REF DESIG	GRID LOC	REF DESIG	GRID LOC	REF DESIG	GRID LOC
C1	F2	C17	E3	Q2	C1	R3	E2
C2	F2	C18	F3	Q3	E2	R4	F2
C3	F2	C20	C2	Q4	E1	R5	D1
C4	F2	C21	C2	Q5	B4	R6	D2
C5	G2	C22	C2	Q6	F2	R7	E2
C6	G2	C24	H2	Q7	E2	R8	D1
C7	G2	CR1	C2	Q8	F2	R9	E2
C8	H2	CR2	D2	Q9	F2	R10	E1
C10	H2	CR3	B4	Q10	G2	R11	E3
C11	D3	CR4	D2	Q11	G2	R13	F3
C13	G3	CR5	E3	Q12	G2	R14	G3
C14	E3	CR6Ü	B3	Q13	G2	R15	D2
C15	E3	L1	F2	R1	E2	R16	D2
C16	E2	Q1	B2	R2	E2	R20	D3

8

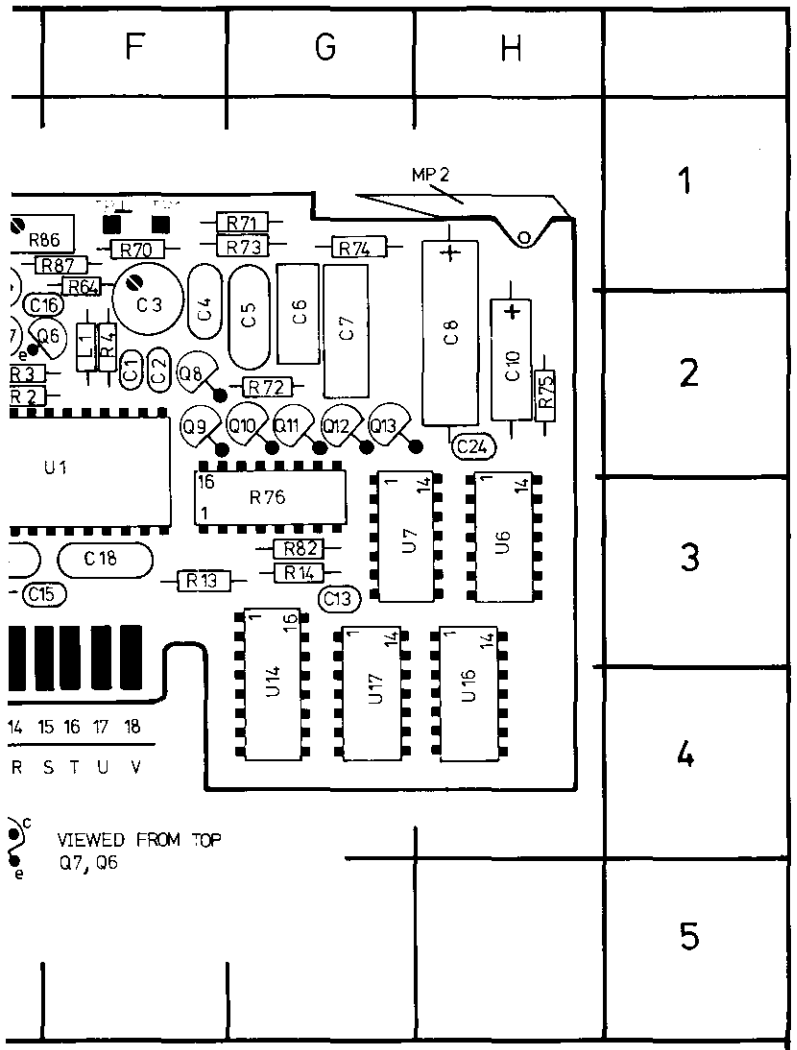

GRID LOC	REF DESIG	GRID LOC	REF DESIG	GRID LOC
E2	R21	D3	R45	A3
F2	R22	D3	R46	B2
D1	R23	D3	R47	B2
D2	R24	D3	R48	A4
E2	R25	E3	R49	C2
D1	R27	E3	R50	B1
E2	R28	E3	R51	C2
E1	R38	B2	R52	B1
E3	R39	D3	R53	B1
F3	R40	B3	R54	B1
G3	R41	B3	R55	A1
D2	R42	A3	R56	A2
D2	R43	A3	R57	B2
D3	R44	A3	R58	D2

REF DESIG	GRID LOC
R59	D2
R60	D2
R61	D2
R62	D2
R63	A2
R64	F2
R65	C1
R67	B4
R68	C1
R69	B4
R70	F1
R71	G1
R72	G2
R73	G1
R74	G1
R75	H2
R76	G3
R82	G3
R86	E1
R87	F1
R88	E1
R89	E2
R90	C1
R91	C1
R94	B2
R95	B4
R96	B3
TP1	F1
TP2	A2
TP3	C2
TP4	C2
TPGND	F1
U1	F2
U2	B2
U3	C2
U4	B4
U6	H3
U7	G3
U8	B3
U9	A3
U10	B3
U11	A2
U12	D2
U14	G4
U16	H4
U17	G4
VR2	D3

SERVICE BLOCK 7
VCO BOARD A5 7

THEORY OF OPERATION

General

The function of the VCO board is to generate the required signal frequency in accordance with either the 8111A front panel settings or an external control voltage. When TRIGGER mode is selected, the output signal repetition rate is controlled by the applied external frequency but the VCO board's operation is different depending on whether the 8111A is in waveform (sine, triangle or square) or pulse mode.

In TRIGGER/waveform function mode the VCO produces the waveform frequency, in accordance with the front panel settings but in TRIGGER/PULSE mode the board serves only as a Schmitt trigger/level shifter to shift the incoming trigger signal for compatibility with the trigger converter circuit of the Width board (A4).

The VCO frequency range is from 1 Hz to 20 MHz (with the capability to reduce to 0.1 Hz in VCO mode – see Table 3–2). The frequency is distributed over 7 decades (from 1 Hz to 10 MHz) and a top 10 – 20 MHz range.

An error detection circuit provides an output signal (in TRIGGER/waveform function mode) whenever an external trigger signal arrives before completion of the current cycle. Reference to Figure 8–7–1 shows that the VCO board comprises a main control IC–U1 and associated external signal and current sources. A range decoder enables selection of a suitable ramp capacitor and also influences, via reference voltages, the current source. A more detailed description of the board's operation will now be given, schematic 8 should be referred to together with the appropriate figures as required.

OPERATION

There are two operating modes for the VCO board – Free Running Mode which includes NORMAL and VCO operation and Triggered Mode which includes TRIGGER, GATE and BURST modes. Although the circuit operation is similar for both modes there are some slight differences which will be described after the general operational description.

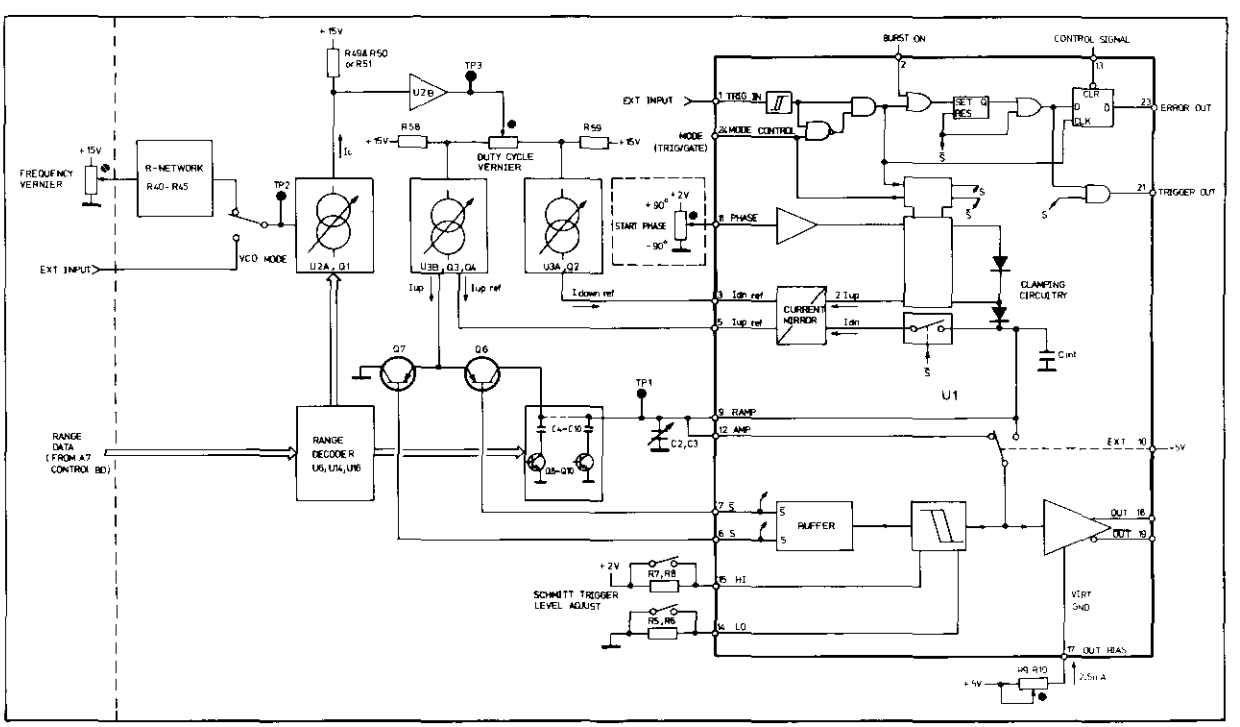

Figure 8–7–1. Simplified VCO Board Block Diagram

In both modes the principle of operation is that a ramp capacitance (one or more of C4–C10) is charged up by I_{up} to the fixed upper threshold level of a Schmitt trigger (within U1) by switching Q6 on. At this point, Q6 is switched off and Q7 on so discharging the capacitance towards ground and also diverting I_{up} to ground until the lower Schmitt threshold is reached, the cycle is then repeated. The charge and discharge sequences are illustrated below:

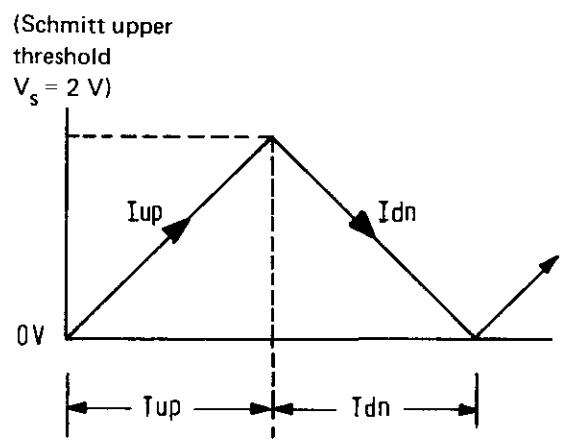

The frequency depends on the two currents and the ramp capacitance. Duty cycle of the waveform is determined by the ratio of $T_{up}/(T_{up} + T_{dn})$ where T_{up} is the time taken to charge up to V_s and T_{dn} is the time taken to discharge to 0 V.

The difference between the two modes is that in Triggered mode an external trigger signal is required at U1 pin 1 to initiate a charge cycle. Also, the ramp capacitors are preset or changed to a voltage determined by the Start Phase potentiometer setting and therefore the charge or "ramp up" process commences from this level. The clamping is achieved via I_{upref} and the current mirror internal to U1 which produces 2 x $I_{up\ ref}$ and the required clamp voltage. A more detailed operational description of the main circuit blocks comprising the VCO board will now be given. Unless otherwise mentioned references are to Figure 8–7–1.

R-Network (R40–R45)

The reference voltage from the front panel FREQUENCY vernier is converted by the network to one of two possible values depending on the operative frequency range i.e. – 1 Hz – 9.99 MHz (decades) or 10–20 MHz (non-decades). The resulting voltage is then used to control U2A, Q1 current source.

Control Current Source (U2A, Q1)

This current source output I_C convertes the output voltage from the R-Network to a +15 V reference voltage (instead of ground referenced). U11 (see schematic 8) enables one of three resistive networks to be selected depending on which of the three indicated frequency range bands is operative. This will be explained in the Range Decoder and Ramp Capacitor section. The selected network limits Ic and therefore the voltage produced across R49/50 or R51 within one of three different ranges.

Duty Cycle Vernier

The output voltage from U2B is fed either via the Duty Cycle vernier potentiometer (used in an inverse mode) to the two constant current sources shown or, directly connected when fixed 50 % duty cycle or pulse mode is selected. Note: in pulse mode the duty cycle potentiometer is used to control pulse width and the trigger output signal from U1 has a fixed 50 % duty cycle.

Current Sources (Iup, Iupref, Idnref)

Current source U3B, Q3, Q4 etc. supplies the range capacitance charging current (I_{up}) via Q6 which is controlled by U1 SW-output. $I_{up\ ref}$ is sued as a reference by the current mirror of U1 to provide the start phase clamp voltage $I_{down\ ref}$ is used as a reference by U1 current mirror to enable the correct discharge or ramp down rate of the previously charged capacitance.

Transistors Q6 and Q7

Q6 is operated as a switch under the control of U1 to supply charging current to the ramp capacitors. Q7, whose operation is always complementary to Q6, serves to bipass current I_{up} to ground at the end of the ramp up period (I_{up} flows constantly).

Range Decoder and Range Capacitors 's (refer to (refer to schematic 8 and Figure 8–7–1)

The range data from A7 Control board is decoded by U14/U16 and used to enable the appropriate range capacitors. Also, depending on which of the three frequency bands (1 Hz – 1 MHz, 1 – 10 MHz or 10 – 20 MHz) is operative pre-limiting of control current Ic within one of three-ranges is done via U11, e.g. a frequency setting of 50 KHz is in band 1 of 1 Hz –

1 MHz, U11 will therefore select the frequency pre-ranging resistive network R55/R54.

The range capacitors are enabled by transistor switches Q8–Q13. C2 and C3 are always enabled and C4–C10 are sequentially enabled in an additive or summing sequence. For the two fastest frequency ranges only C2 and C3 are operative, the 10–20 MHz value being achieved by increasing the available ramp current. This is done by selecting the R56 network which results in maximum Ic and therefore maximum control voltage being available. For the 1–10 MHz range the Ic is reduced via R52/R53 network and therefore the ramp current is reduced. All other ranges use R54/R55 and have the same ramp current control voltage and ramp current limits. For the 0.1 – 1 MHz range C2, C3 and C4 are enabled, for 10–100 KHz C2, C3, C4 and C5 are enabled etc. The complete range capacitor selection data is given in Table 8–7–4. in the Troubleshooting section.

Schmitt Trigger Level Adjust

The two trigger levels are fixed at 0 V and +2 V for all frequency ranges except the two fastest when they are changed by switching in external resistors.

TROUBLESHOOTING

1. General Troubleshooting Information
2. Analogue Data
3. Digital Data

1. General Troubleshooting Information:

It is suggested that troubleshooting the VCO board is started at TP 1 since it is possible to confirm, by the presence of either a triangular waveform or a constant dc level as shown, that particular circuit components are operating correctly. For all operating modes of the 8111A except TRIGGER/PULSE the following details apply:

Modes

A. (free running) NORMAL, VCO (50 % DUTY CYCLE)

Waveshape at TP 2.

0 V and +2 V apply for frequencies between 1 Hz – 1000 KHz for frequencies 1 MHz – 20 MHz values are slightly changed,

b. (Triggered) TRIGGER, GATE, BURST

When there is no external trigger signal present the voltage at TP 1 should be fixed at between 0 and 2 V depending on the position of the START PHASE potentiometer.

–90° start phase 0 V approx.
0° start phase 1 V approx.
+90° start phase 2 V approx.

In TRIGGER/PULSE mode the VCO board works only as a Schmitt trigger/level shifter with the external trigger signal passing through U1 and being made compatible with circuitry on board A4. If the fault appears to originate from the VCO board then check that U1 pin 13 is clamped at TTL low since, if not,then the input trigger signal will not be transferred to U1 pin 21 (Trigger Out).

If the test condition for the triggered modes (B) is wrong then check whether current source U33, Q3, Q4 is operating correctly, if so and waveshape for mode A is correct then U1 is suspect. Ensure that problem is not with Q3 and that Q6, Q7 are not faulty before replacing U1.

If checks show that the correct test results at TP1 do not occur then the following faultfinding information should help to isolate the faulty component. The voltages given are referenced to ground unless otherwise stated.

2. Analogue Data:

① Referring to Figure 8–7–2. and Schematic 8, it can be seen that the voltage at TP2 comes from either the FREQUENCY potentiometer or, when in VCO mode, the EXT INPUT connector. When not in VCO mode, adjustment of the FREQUENCY vernier should produce the following values:

Vernier position:	CCW	CW
TP2 voltage:	< 1 V	> 10 V
or:	< 1 V	> 2 V (for 10–20 MHz range)

② The voltage at TP 3 is referenced to +15 V (TP4) and controls the current sources I_{up}, I_{upref} and $I_{down\ ref}$. Adjustment of the FREQUENCY/vernier should produce the values shown in Table 8–7–1.

IC Current Source

③ The current source converts the input voltage from either the FREQUENCY vernier or the EXT INPUT (in VCO mode). The voltage, which is referenced to ground, is converted to a new value referenced to +15 V. A check on the correct operation of the complete current source circuit of U2, Q1 etc. can be done by confirming the values given in Table 8–7–2.

Table 8–7–1. Test Voltages for Current Sources

	Vernier position		Applicable Ranges and Duty Cycle
	CCW	CW	
TP3 Voltage swing	–0.1 V	–1.4 V	(1 Hz–1 MHz Ranges, fixed 50 % DTY)
	–0.6 V	–7.8 V	(1 Hz–1 MHz Ranges, variable DTY)
	–0.26 V	–3.1 V	(1 Hz–10 MHz range) fixed 50 % DTY
	–2.6 V	–6.4V	(10 – 20 MHz Range) fixed 50 % DTY
The given values are referenced to +15 V (TP4). Tolerance: ± 10 %.			

Table 8–7–2. Voltage drops across Range resistors

Frequency Range	Selected R (Operative Resistors)	Freq. vern. pos.:	CCW	CW
1 Hz – 1 MHz	R54/55	voltage drop	0.45 V	5.5 V
1 – 10 MHz	R52/53		0.45 V	5.5 V
10 – 20 MHz	R56		0.45 V	1.1 V
Tolerance: 10 %		given values are for fixed 50 % DUTY CYCLE		

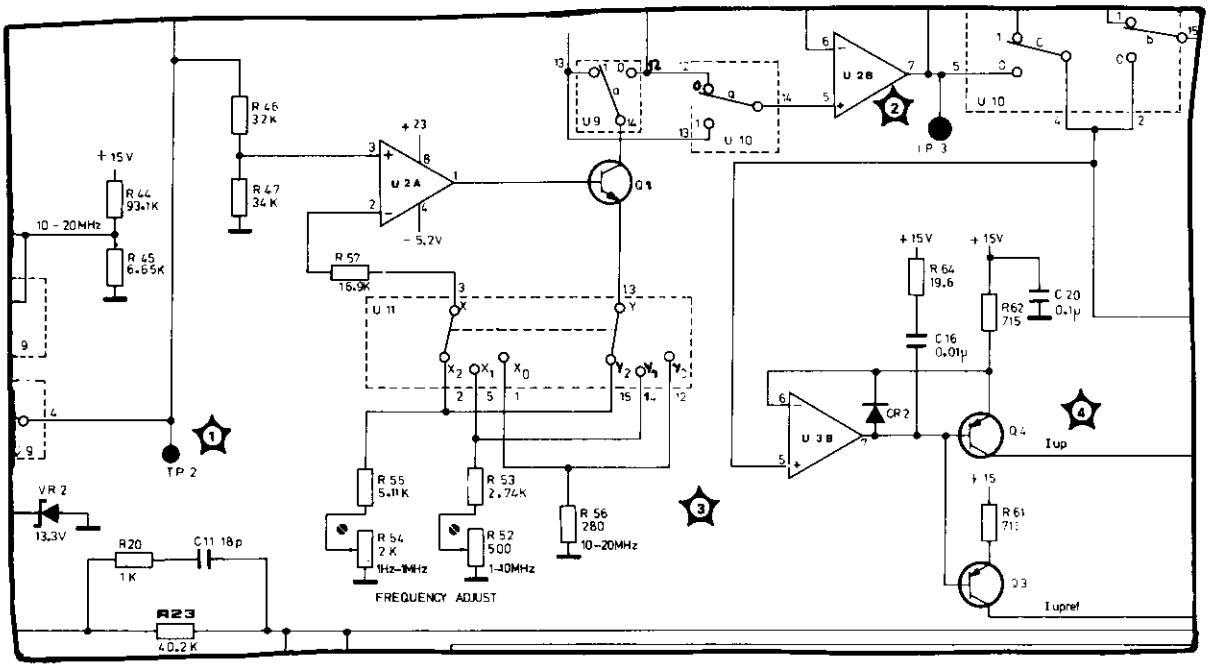

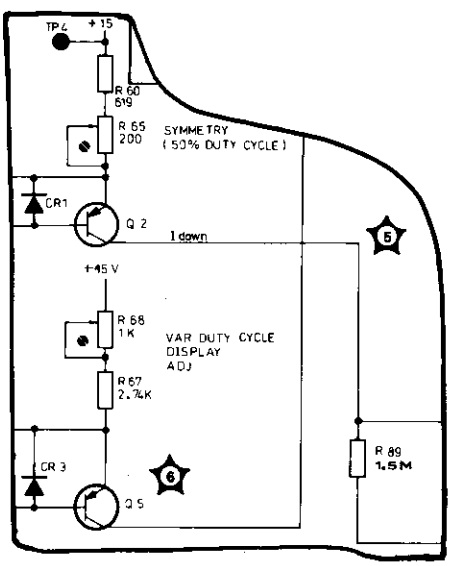

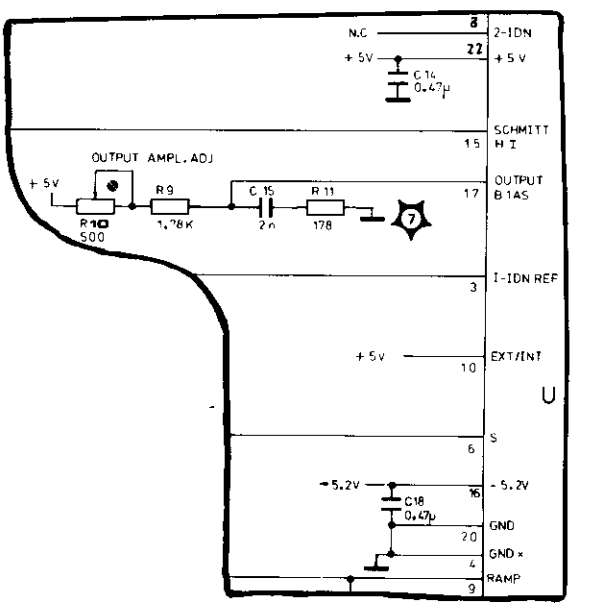

Figure 8–7–2. Troubleshooting Test Points

I_{up} Current Source

4 The I_{up} current may be checked by connecting a current meter between the collector of Q4 and ground (therefore routing I_{up} to ground). Set the 8111A to TRIGGER mode and fixed 50 % DUTY. Verify that Q6 is switched on and Q7 off.

Check, when the FREQUENCY vernier is adjusted, that the values are as in Table 8–7–3.

$I_{downref}$ Current Source

5 $I_{downref}$ can be measured (after removing U1 from its connector) by connecting a current meter between Q2 collector and ground. The values and test conditions for I_{down} are as given in Table 8–7–3 previously.

Variable Duty Cycle Display Current Source

6 The current source U4, Q5 etc. outputs a current which is proportional to I_{up}, the resulting voltage drop produced across A11R18 is then used to produce the displayed DUTY CYCLE percentage value. The circuit operation can be checked by setting the 8111A to fixed 50 % DUTY and checking the voltage at Q5 collector. The value should change as shown when the FREQUENCY vernier is adjusted:

Output Bias Control Current

7 This current, which controls the output amplifier of U1 is typically 2.5 mA and pin 17 of U1 must be at 0 V (virtual ground).

Table 8–7–3. I_{up} Values

	Vernier Position		Applicable Frequency Ranges
	CCW	CW	
Current	0.14 mA	1.9 mA	(1 Hz – 1 MHz Ranges)
	0.36 mA	4.3 mA	(1 MHz – 10 MHz Range)
	3.6 mA	8.9 mA	(10 MHz – 20 MHz Range)

Tolerance: ± 10 %.

Table 8–7–4.

	Vernier Position		Applicable Frequency Range
	CCW	CW	
Voltage at the collector of Q5:	70 mV	0.87 V	(1 Hz – 1 MHz Ranges)
	0.15 V	1.9 V	(1 MHz – 10 MHz Range)
	1.6 V	4.0 V	(10 MHz – 20 MHz Range)

Tolerance: ± 10 %.

3. Digital Data

If the fault appears to be related to range capacitor selection i.e. a digital data decoding problem then use Table 8–7–4 to verify that the appropriate devices are operating correctly.

The truth table of the other digital devices are given on schematic 8.

Table 8–7–5. Range Capacitor Selection Truth Table

Frequency Range	U14 pin No.										U16 pin No.			U17 pin No.		U16 pin No.	Selected Capacitors * (C2 and C3 are selected in all ranges)
	3	2	1	15	14	13	12	11	10	9	11	3	8	11	8	6	
10 – 20 MHz	0	0	0	0	1	1	1	1	1	1	0	0	0	0	0	0	*
1 – 10 MHz	0	0	1	1	0	1	1	1	1	1	0	0	0	0	0	0	*
0.1 – 1 MHz	0	1	0	1	1	0	1	1	1	1	0	0	0	0	0	1	C4
10 – 100 KHz	0	1	1	1	1	1	0	1	1	1	0	0	0	0	1	1	C4, C5
1 – 10 KHz	1	0	0	1	1	1	1	0	1	1	0	0	0	1	1	1	C4–C6
0.1 – 1 KHz	1	0	1	1	1	1	1	1	0	1	0	0	1	1	1	1	C4–C7
10 – 100 Hz	1	1	0	1	1	1	1	1	1	0	0	1	1	1	1	1	C4–C8
1 – 10 Hz	1	1	1	1	1	1	1	1	1	1	1	1	1	1	1	1	C4–C10

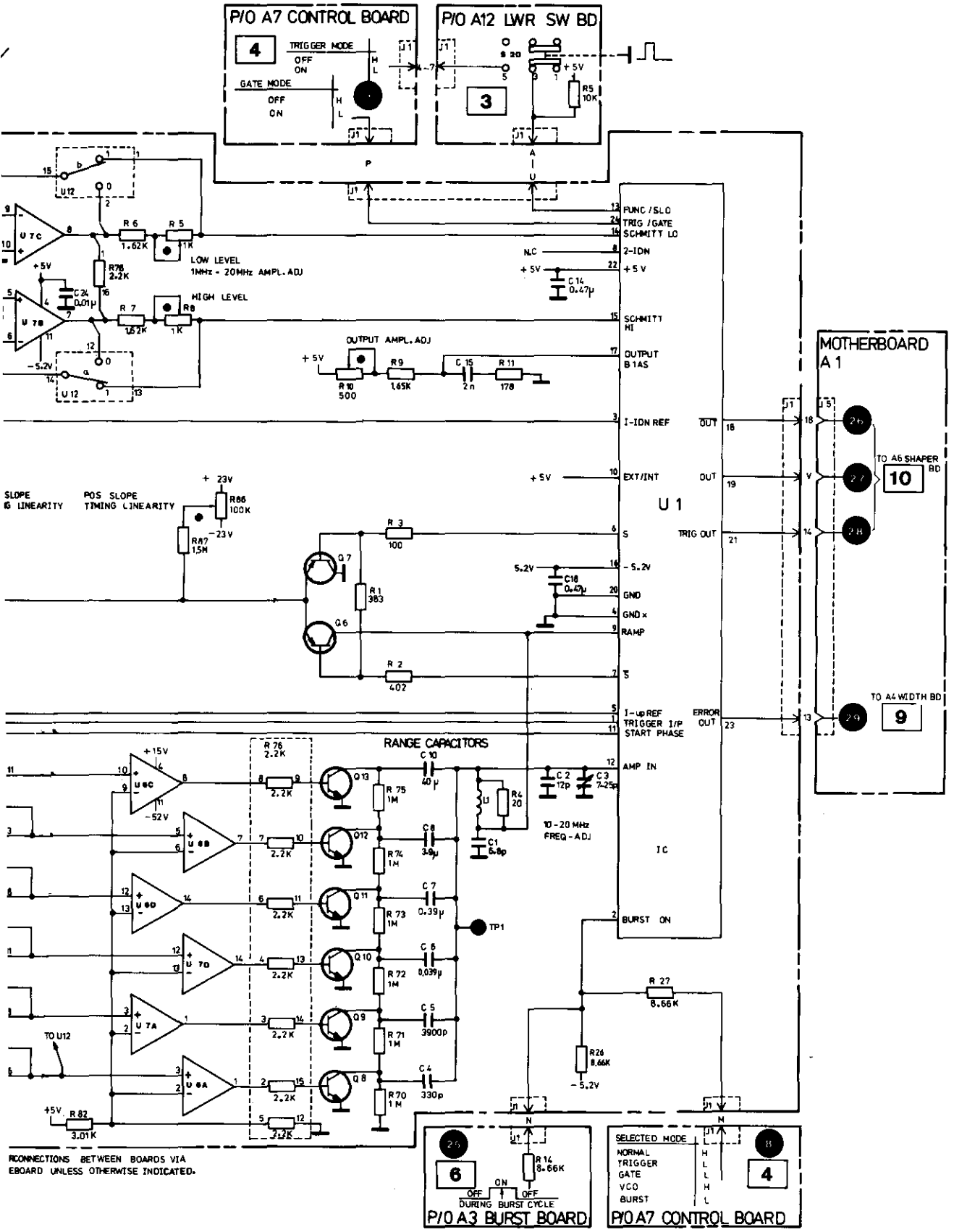

VCO BOARD A5 **8**

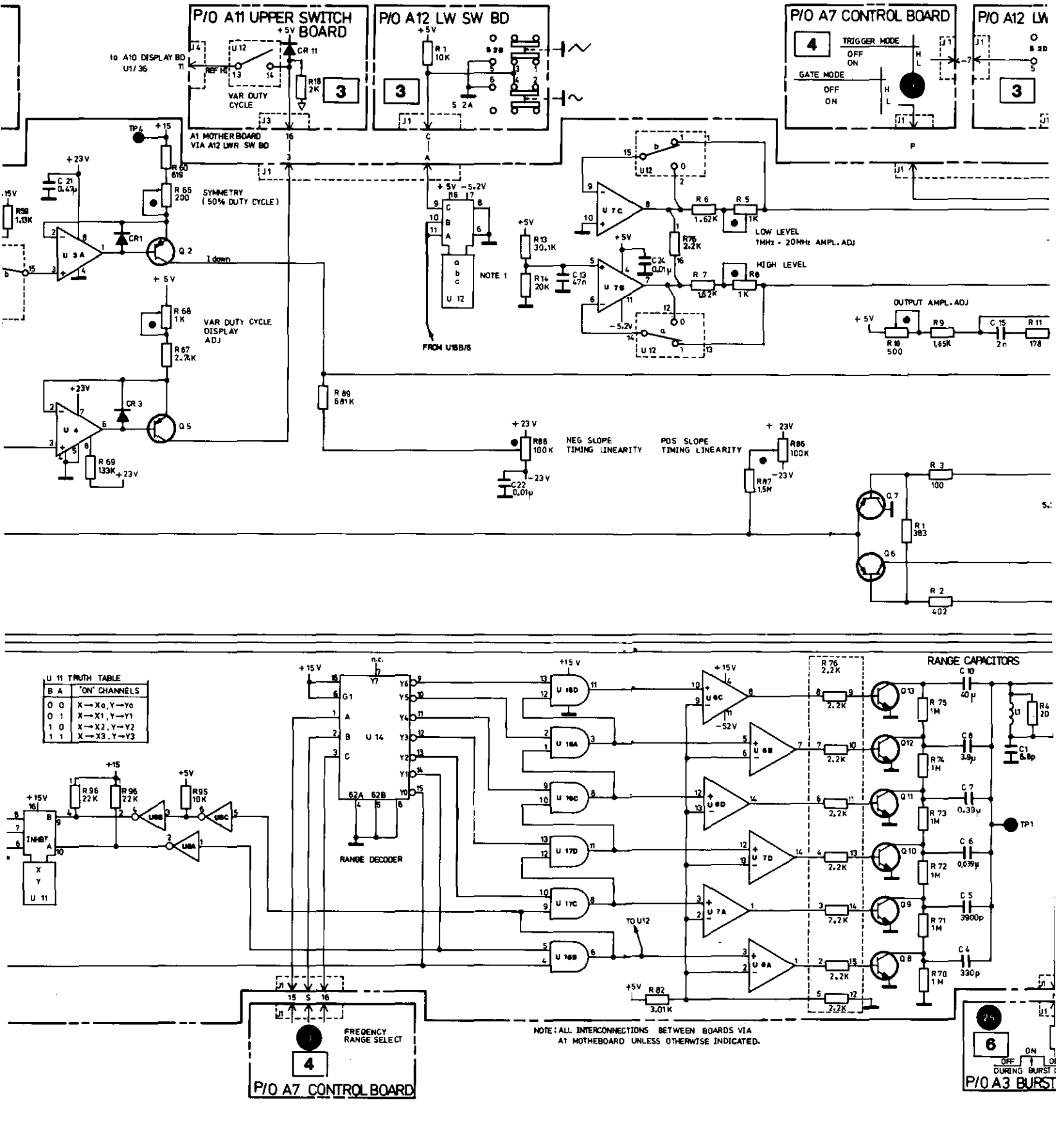
P/O A11 UPPER SWITCH BOARD
P/O A12 LW SW BD
P/O A7 CONTROL BOARD
P/O A12 LW
to A10 DISPLAY BD U1/35
VAR DUTY CYCLE
A1 MOTHERBOARD VIA A12 LWR SW BD
SYMMETRY (50% DUTY CYCLE)
I down
VAR DUTY CYCLE DISPLAY ADJ
NOTE 1
FROM U16B/5
TRIGGER MODE
OFF
ON
GATE MODE
LOW LEVEL
1MHz - 20MHz AMPL. ADJ
HIGH LEVEL
OUTPUT AMPL. ADJ
NEG SLOPE TIMING LINEARITY
POS SLOPE TIMING LINEARITY
U 11 TRUTH TABLE
B A 'ON' CHANNELS
0 0 X→X0, Y→Y0
0 1 X→X1, Y→Y1
1 0 X→X2, Y→Y2
1 1 X→X3, Y→Y3
RANGE DECODER
RANGE CAPACITORS
TO U12
FREQENCY RANGE SELECT
NOTE: ALL INTERCONNECTIONS BETWEEN BOARDS VIA A1 MOTHEBOARD UNLESS OTHERWISE INDICATED.
P/O A7 CONTROL BOARD
P/O A3 BURST

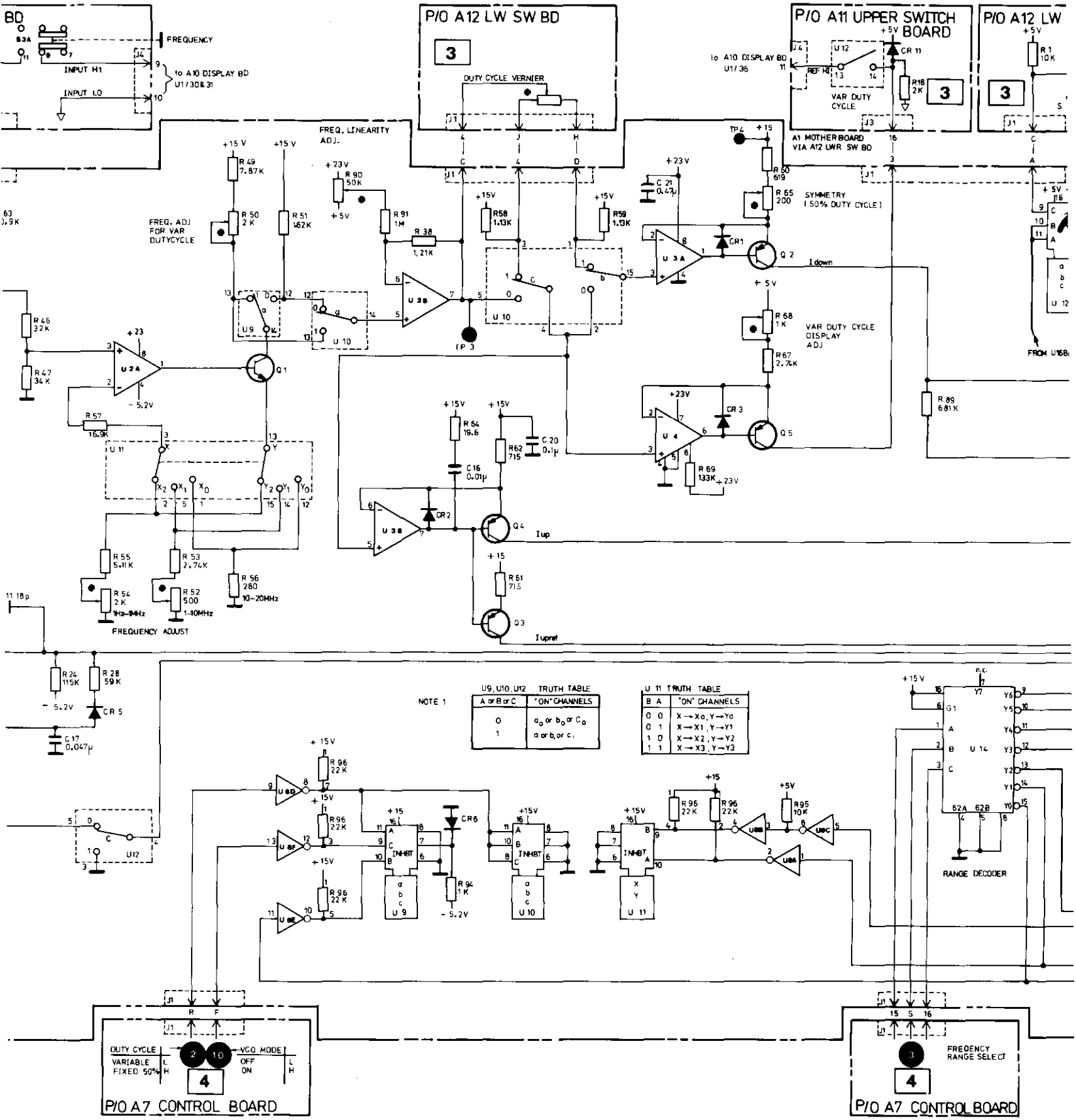
P/O A12 LW SW BD
P/O A11 UPPER SWITCH BOARD
P/O A12 LW
FREQUENCY
INPUT HI
INPUT LO
to A10 DISPLAY BD U1/30 & 31
DUTY CYCLE VERNIER
FREQ. LINEARITY ADJ.
FREQ. ADJ FOR VAR DUTYCYCLE
to A10 DISPLAY BD U1/36
VAR DUTY CYCLE
A1 MOTHERBOARD VIA A12 LWR SW BD
SYMMETRY (50% DUTY CYCLE)
VAR DUTY CYCLE DISPLAY ADJ
FROM U16B
FREQUENCY ADJUST
Idown
Iup
Iupref
U9, U10, U12 TRUTH TABLE
A or B or C | "ON" CHANNELS
0 | a0 or b0 or c0
1 | a or b or c
U 11 TRUTH TABLE
B A | "ON" CHANNELS
0 0 | X→X0, Y→Y0
0 1 | X→X1, Y→Y1
1 0 | X→X2, Y→Y2
1 1 | X→X3, Y→Y3
NOTE 1
RANGE DECODER
DUTY CYCLE
VARIABLE
FIXED 50%
VCO MODE
OFF
ON
P/O A7 CONTROL BOARD
FREQENCY RANGE SELECT
P/O A7 CONTROL BOARD

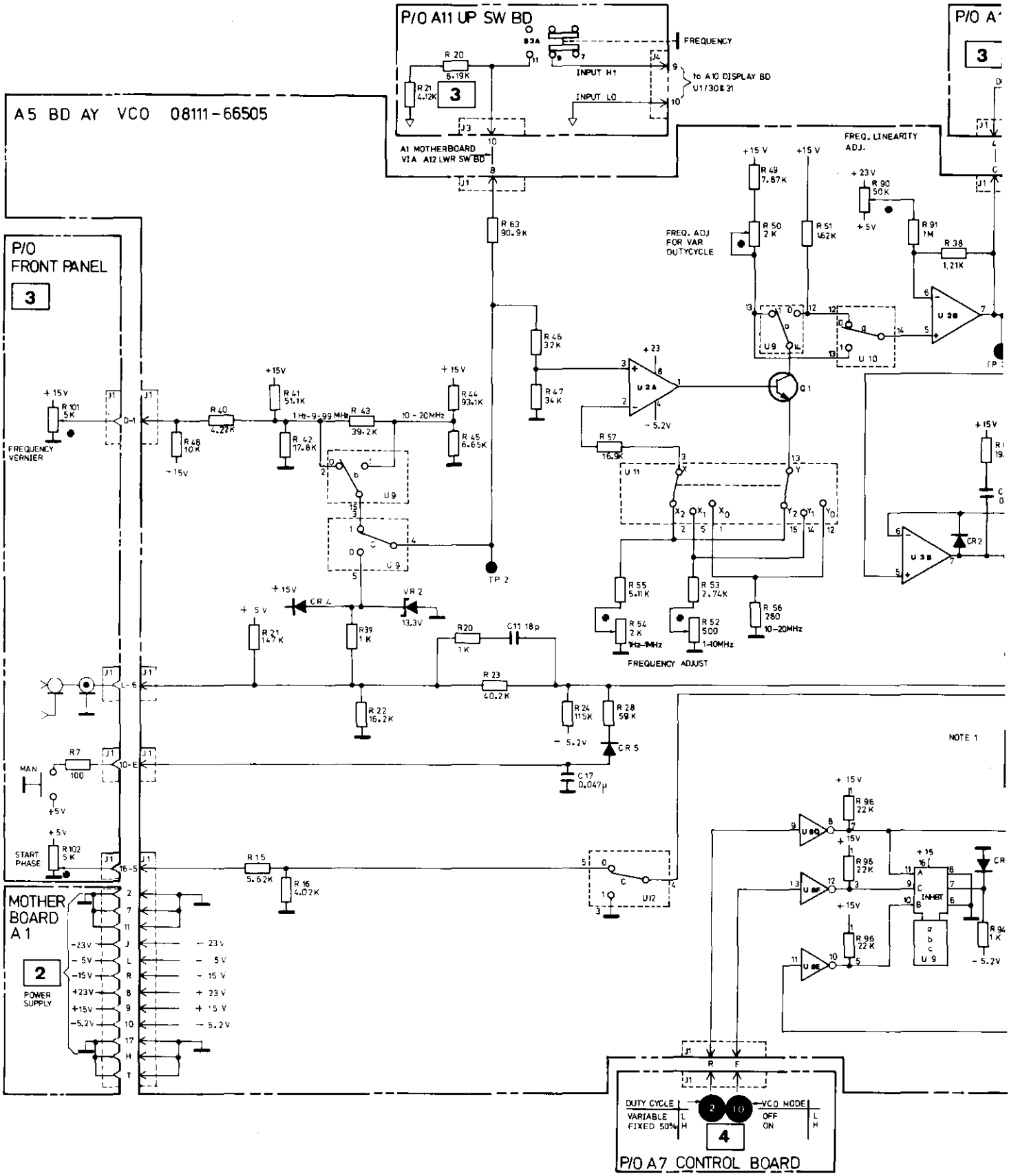
A5 BD AY VCO 08111-66505
P/O A11 UP SW BD
FREQUENCY
INPUT H1
INPUT LO
to A10 DISPLAY BD U1/30 & 31
A1 MOTHERBOARD VIA A12 LWR SW BD
P/O FRONT PANEL
FREQUENCY VERNIER
MAN
START PHASE
MOTHER BOARD A1
POWER SUPPLY
FREQ. LINEARITY ADJ.
FREQ. ADJ FOR VAR DUTYCYCLE
FREQUENCY ADJUST
NOTE 1
DUTY CYCLE
VARIABLE
FIXED 50%
VCO MODE
OFF
ON
P/O A7 CONTROL BOARD

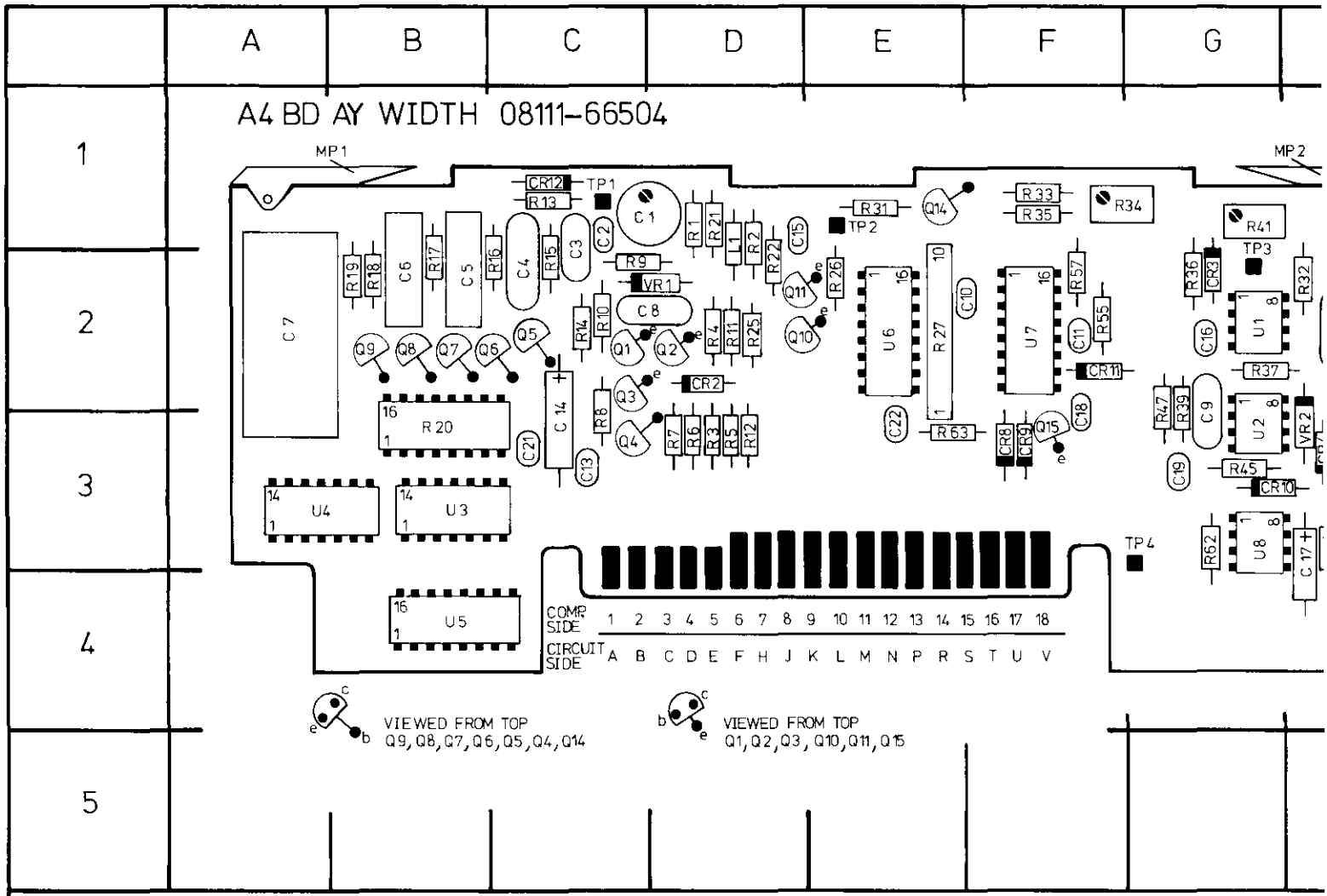

REF DESIG	GRID LOC	REF DESIG	GRID LOC	REF DESIG	GRID LOC	REF DESIG	GRID LOC	REF DESIG	GRID LOC
C1	C1	C16	G2	L1	D2	R2	D1	R18	B2
C2	C1	C17	H4	Q1	C2	R3	D3	R19	B2
C3	C1	C18	F3	Q2	D2	R4	D2	R20	B3
C4	C1	C19	G3	Q3	C2	R5	D3	R21	D1
C5	B2	C21	C3	Q4	C3	R6	D3	R22	D2
C6	B2	C22	E3	Q5	C2	R7	D3	R25	D2
C7	A2	CR2	D2	Q6	B2	R8	C3	R26	E2
C8	C2	CR3	G2	Q7	B2	R9	C2	R27	E2
C9	G2	CR4	H3	Q8	B2	R10	C2	R31	E1
C10	E2	CR5	H3	Q9	B2	R12	D3	R32	H2
C11	F2	CR8	F3	Q10	D2	R13	C1	R33	F1
C12	H2	CR9	H3	Q11	D2	R14	C2	R34	F1
C13	C3	CR10	G3	Q14	E1	R15	C2	R35	F1
C14	C3	CR11	F2	Q15	F3	R16	B2	R36	G2
C15	D1	CR12	C1	R1	D1	R17	B2	R37	G2

9

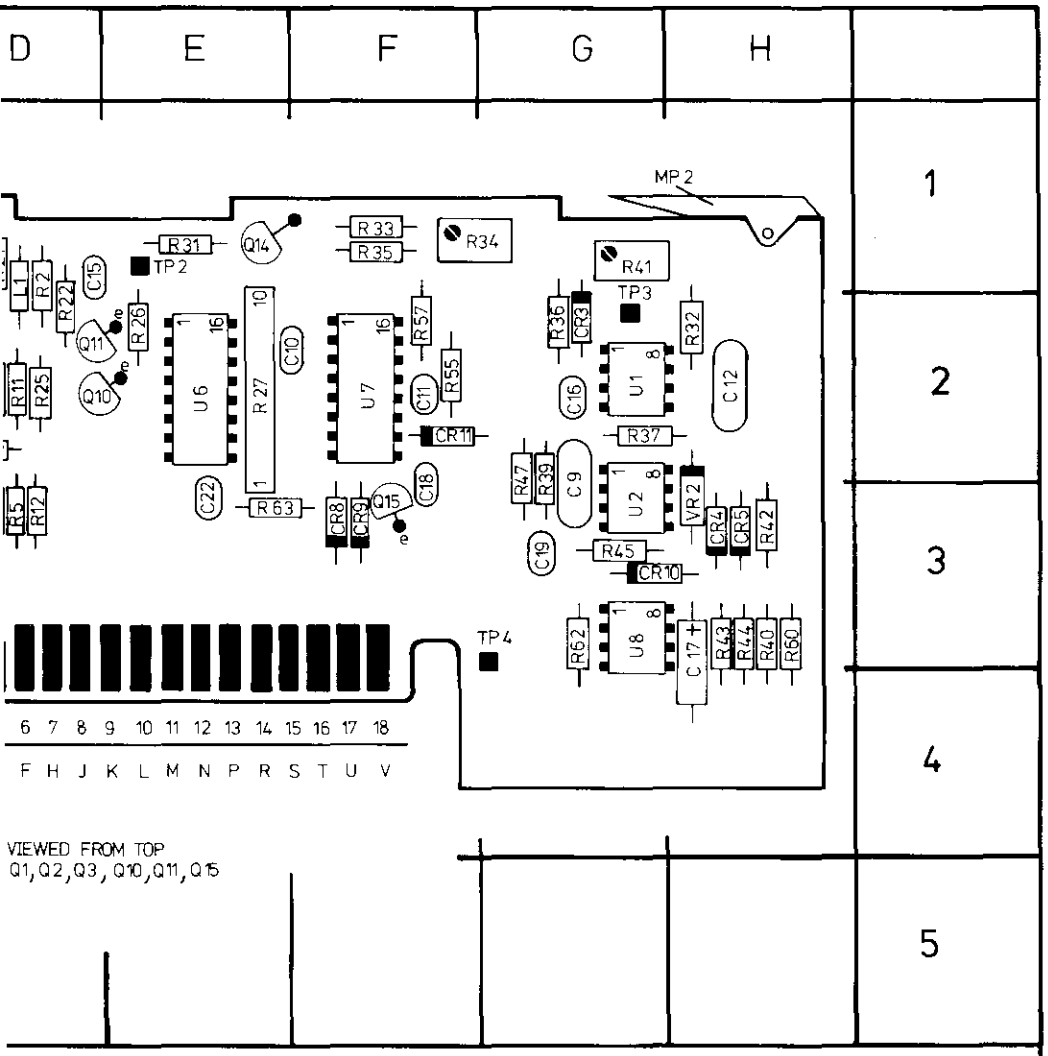

ID C	REF DESIG	GRID LOC	REF DESIG	GRID LOC	REF DESIG	GRID LOC
	R2	D1	R18	B2	R39	G3
	R3	D3	R19	B2	R40	H3
	R4	D2	R20	B3	R41	G1
	R5	D3	R21	D1	R42	H3
	R6	D3	R22	D2	R43	H3
	R7	D3	R25	D2	R44	H3
	R8	C3	R26	E2	R45	G3
	R9	C2	R27	E2	R47	G3
	R10	C2	R31	E1	R55	F2
	R12	D3	R32	H2	R57	F2
	R13	C1	R33	F1	R60	H3
	R14	C2	R34	F1	R62	H3
	R15	C2	R35	F1	R63	E3
	R16	B2	R36	G2		
	R17	B2	R37	G2		

REF DESIG	GRID LOC
U1	G2
U2	G3
U3	B3
U4	A3
U5	B4
U6	E2
U7	F2
U8	G3
VR1	D2
VR2	H3

SERVICE BLOCK 8
WIDTH GENERATOR A4 9

THEORY OF OPERATION

General

The function of the width generator (applicable only in pulse mode) is to provide an output pulse of known, predetermined width in accordance with the 8111A front panel settings.

The Width board (A4) includes the circuitry to do this and also a width error detector/display driver.

The width range, as stated in the Specifications Table, is from 25 ns to 100 ms, this is divided into seven ranges the fastest being 25 ns to 100 ns and then reducing in decade steps from 100–1000 ns to the slowest, 10 ms – 100 ms.

A block diagram of the main sections of the board is shown in Figure 8–8–1, these are: a current source and associated control devices, a set of range capacitors, a range data decoder and associated capacitor selection devices, a Schmitt trigger, a trigger signal converter and and error detector/display driver.

Reference to schematic 9 should be made when reading the following operational description.

OPERATION

The basic operation of the width generator is as follows: A trigger signal (WIDTH TRIGGER) produced either by the VCO or an external source and routed via A6 Shaper, is input to A4.

This sets the Schmitt trigger which then causes the width output signal to go high and enables a constant current to charge up a range capacitor. When the capacitor (or ramp) voltage reaches the Schmitt trigger threshold the width output signal is "reset": – width cycle completed. The capacitor is rapidly discharged and the overall circuit is now ready to receive the next trigger signal from A5.

If, prior to completion of the width cycle the next trigger signal should arrive an error signal will be generated. A more detailed description of the operation of the individual functional "blocks" of the overall circuit will now be given.

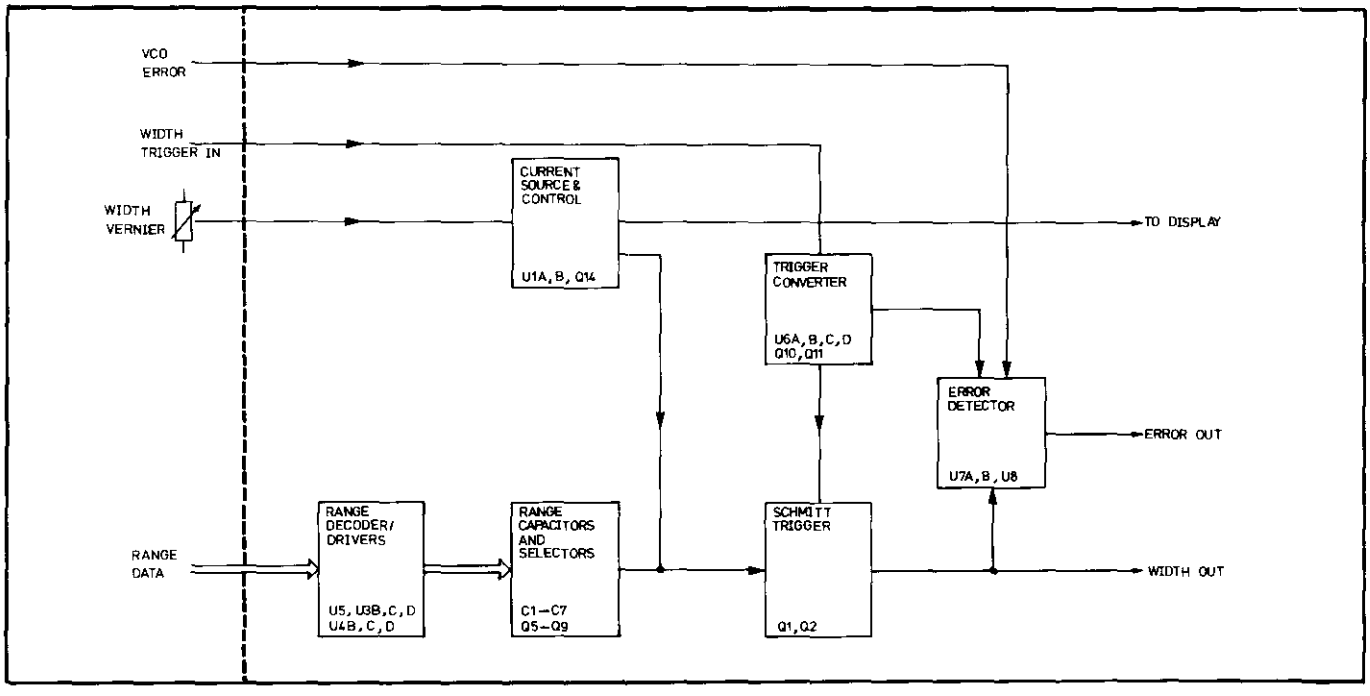

Figure 8–8–1. Simplified Width Board Block Diagram

Current Source

Figure 8–8–2 shows a simplified diagram of the current source.

The front panel mounted width vernier controls the output voltage of U2A, CCW or zero resistance for highest output voltage/fastest value and vice-versa for CW. The adjustable range of output values is dependent on the two reference voltages –5.2 V and –4.16 V. In the fastest width range (25 ns – 100 ns), "switch" S2 is open, so the adjustable range is dependent only on the –5.2 V reference voltage.

The output voltage of U2A together with R41 + R39 controls the current supplied to the range capacitors except when in the fastest range, here S1 is closed to increase the current by a factor of 10 (compared to that required for the other ranges) and therefore achieving faster ramp times. "Switch" functions S1 and S2 as shown in the figure are provided by U1B and U2B together with associated peripheral components. In all ranges except the fastest S2 is closed and S1 open.

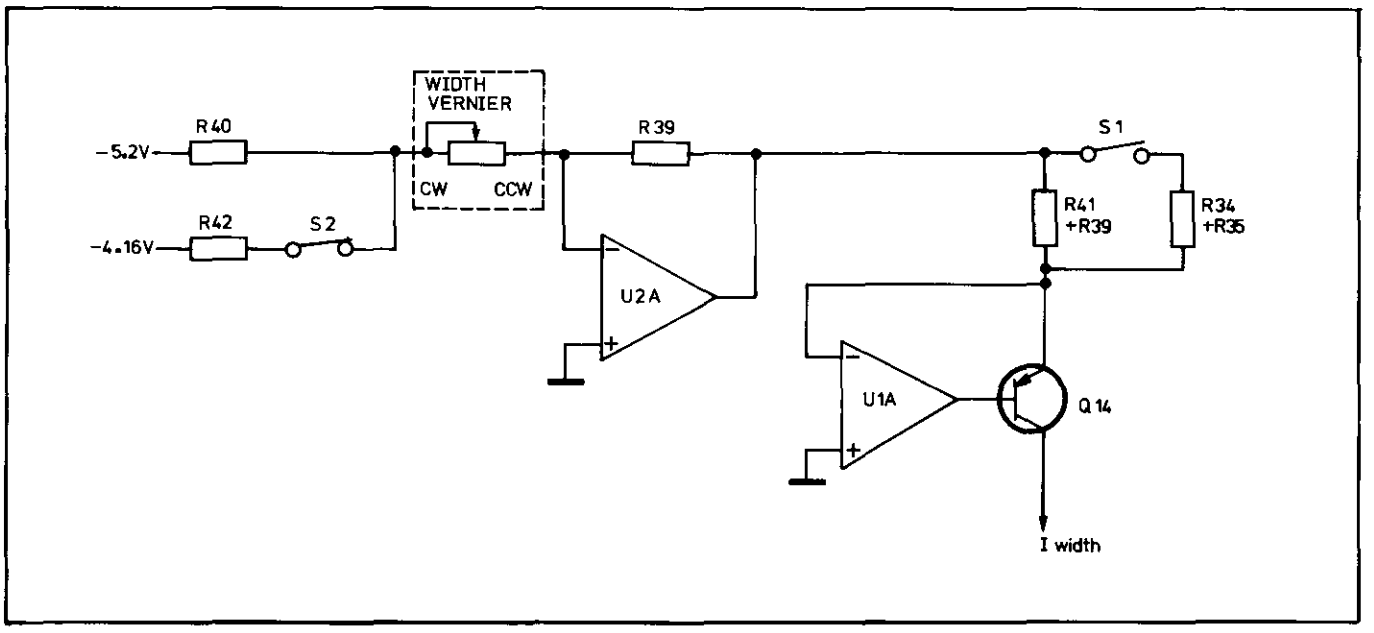

Figure 8–8–2. Simplified Current Source Circuit

Width Range Decoder and Capacitors

Range data, from the front panel switch via board A7, is decoded by the 3–8 decoder U5 (see Figure 8–8–3) to enable either one of the five capacitors C3–C7 plus C1, C2 or only C1, C2. C1, C2 are in fact permanently switched in and are used either as a stand-alone pair for the two fastest width ranges or combined with any of the other five capacitors for all other ranges. The capacitor select/enable transistors Q5–Q9 are operated in both the forward and reverse modes to enable current to flow to charge and also discharge the capacitors.

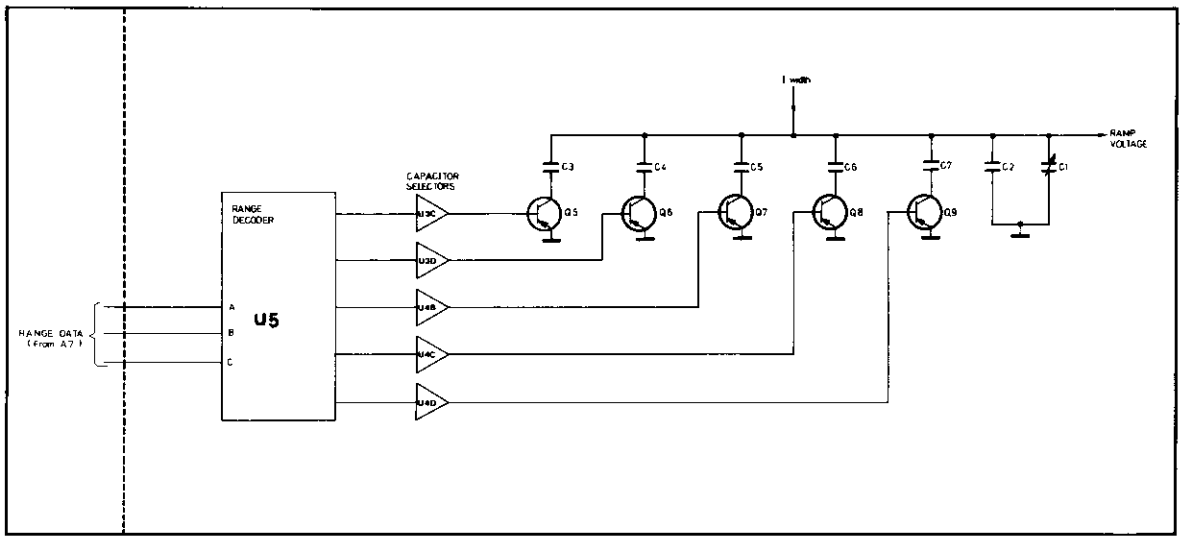

Figure 8–8–3. Simplified Width Range Selector Diagram

Error Detector Circuit

Reference to schematic 9 shows that the width trigger input signal is connected to the clock input of U7A (D type flip-flop) and the width output signal to the D input. A positive going edge at the clock input will cause the data at the D input to be transferred to the Q output, i.e. if D is still high (width signal not completed) when a trigger signal arrives an error signal is produced. A timing diagram to illustrate the error detection process is shown in Figure 8–8–4.

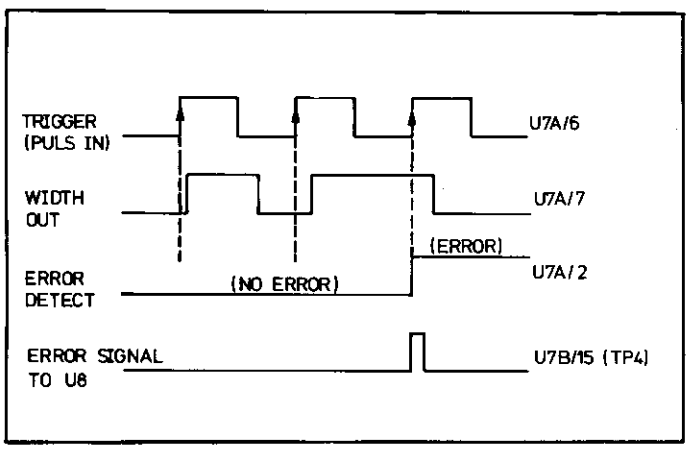

Figure 8–8–4. Error Detection Timing Diagram

Comparator U8 lengthens the output pulse of the monostable U7B and provides a signal suitable for driving the ERROR LED.

Schmitt Trigger

Reference to schematic 9 shows that the Schmitt trigger circuit comprises a differential amplifier with feedback-Q1, Q2 etc. and an emitter follower Q3, Q4.

In the non-active state Q1 conducts and Q2 is turned off. The output voltage of the range capacitors' common connection is clamped at −7.4 V via the emitter follower Q3, Q4. CR2 is biased on and provides base current for Q1 and quiescent current for Q4.

On receipt of a positive trigger pulse, Q2 turns on and switches Q1 off allowing the width output signal to go "high" or active.

The potential at the base of Q4 increases, CR2 is biased off and Q4 is therefore turned off. A charging current is now allowed to flow through the selected range capacitor until the threshold level of the Schmitt trigger is reached. Q1 is then turned on which switches Q2 off and the width output signal goes "low" or off.

The ramp capacitor voltage is discharged to −7.4 V via emitter follower Q4.

Trigger Converter

Refer to schematic 9, the trigger converter generates a 12 ns output pulse (at U6A output) on the positive going edge of the VCO derived input signal. The pulse length is derived from the propagation delay of R27/C10 and the ECL NOR gate U6A. This pulse is then used to set the Schmitt trigger.

TROUBLESHOOTING

When troubleshooting the width board set the 8111A Waveform to Pulse Mode.

Referring to Figure 8–8–5, check the conditions at the following test points, this assists in isolating the fault.

1. The voltage at TP3 is used to control the current source. It should vary by turning the width vernier as follows:

CW		CCW
from 0.7 V	to	9.8 V
or 0.7 V	to	3.9 V in 25 ns–100 ns Range

2. The voltage drop across R31 indicates the current supplied by the current source. Depending on the width vernier position it should vary as follows:

CW		CCW
from 50 mV	to	650 mV
or 0.5 V	to	2.6 V in 25 ns–100 ns Range

3 4 5 and 6 see below :

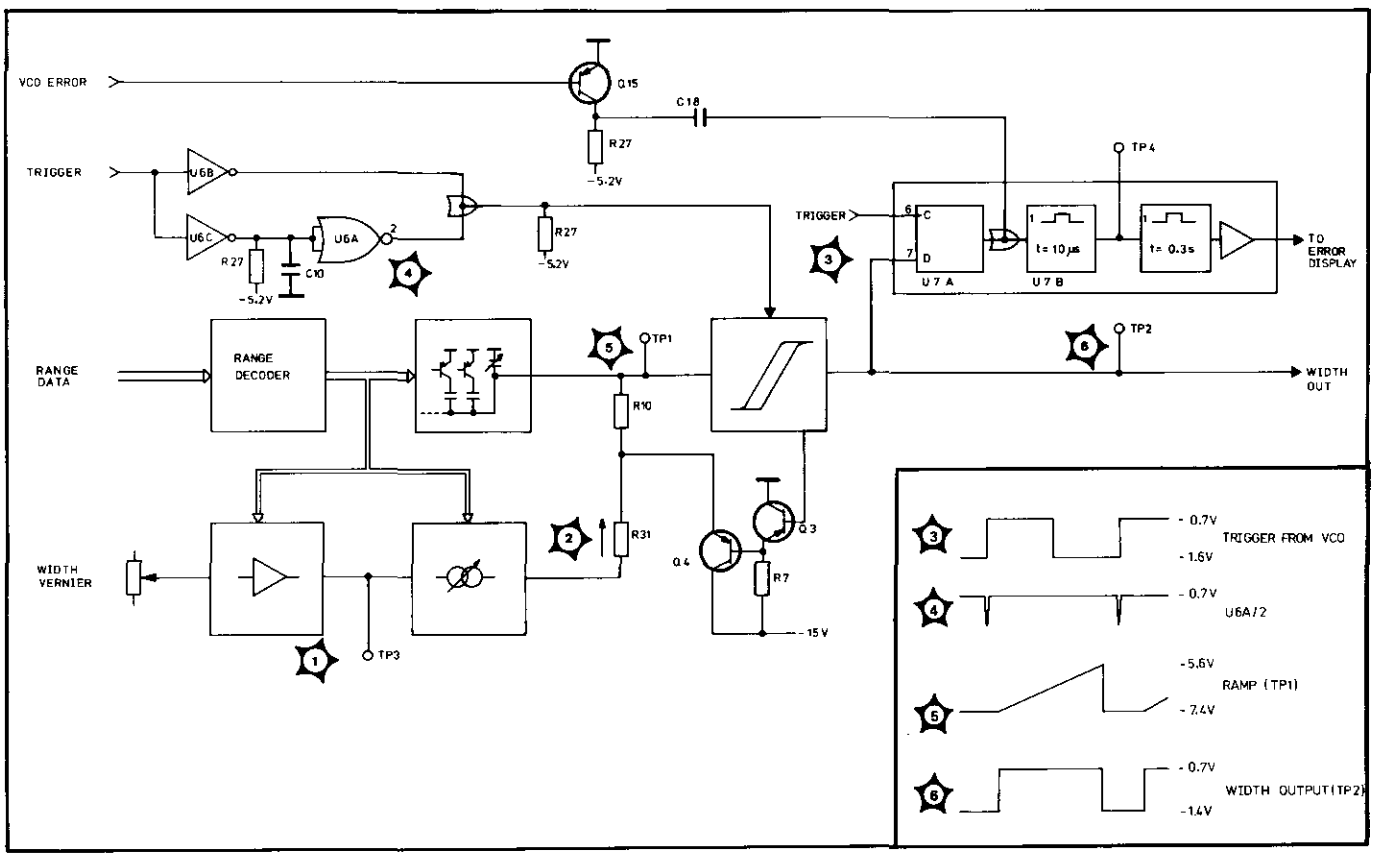

Figure 8–8–5. Width Troubleshooting Diagram

For checking standby conditions of the width board it is recommended that the 8111A be set to a non-pulse waveform. Should the fault appear to be in the WIDTH RANGE SELECTOR section, U5 outputs can be checked against the truth Table 8–8–1.

Table 8–8–1. Range Decoder (U5) Truth Table

Width Range	Range Data (U5 Inputs)			Range Data (U5 Outputs)						Selected Capacitor
	C pin 3	B pin 2	A pin 1	Y_0 pin 15	Y_1 pin 14	Y_2 pin 13	Y_3 pin 12	Y_4 pin 11	Y_6 pin 9	
10 ms – 100 ms	0	0	0	0	1	1	1	1	1	C7
1 ms – 10 ms	0	0	1	1	0	1	1	1	1	C6
100 μs – 1 ms	0	1	0	1	1	0	1	1	1	C5
10 μs – 100 μs	0	1	1	1	1	1	0	1	1	C4
1 μs – 10 μs	1	0	0	1	1	1	1	0	1	C3
100 ns – 1 μs	1	0	1	1	1	1	1	1	1	–
25 ns – 100 ns	1	1	0	1	1	1	1	1	0	–

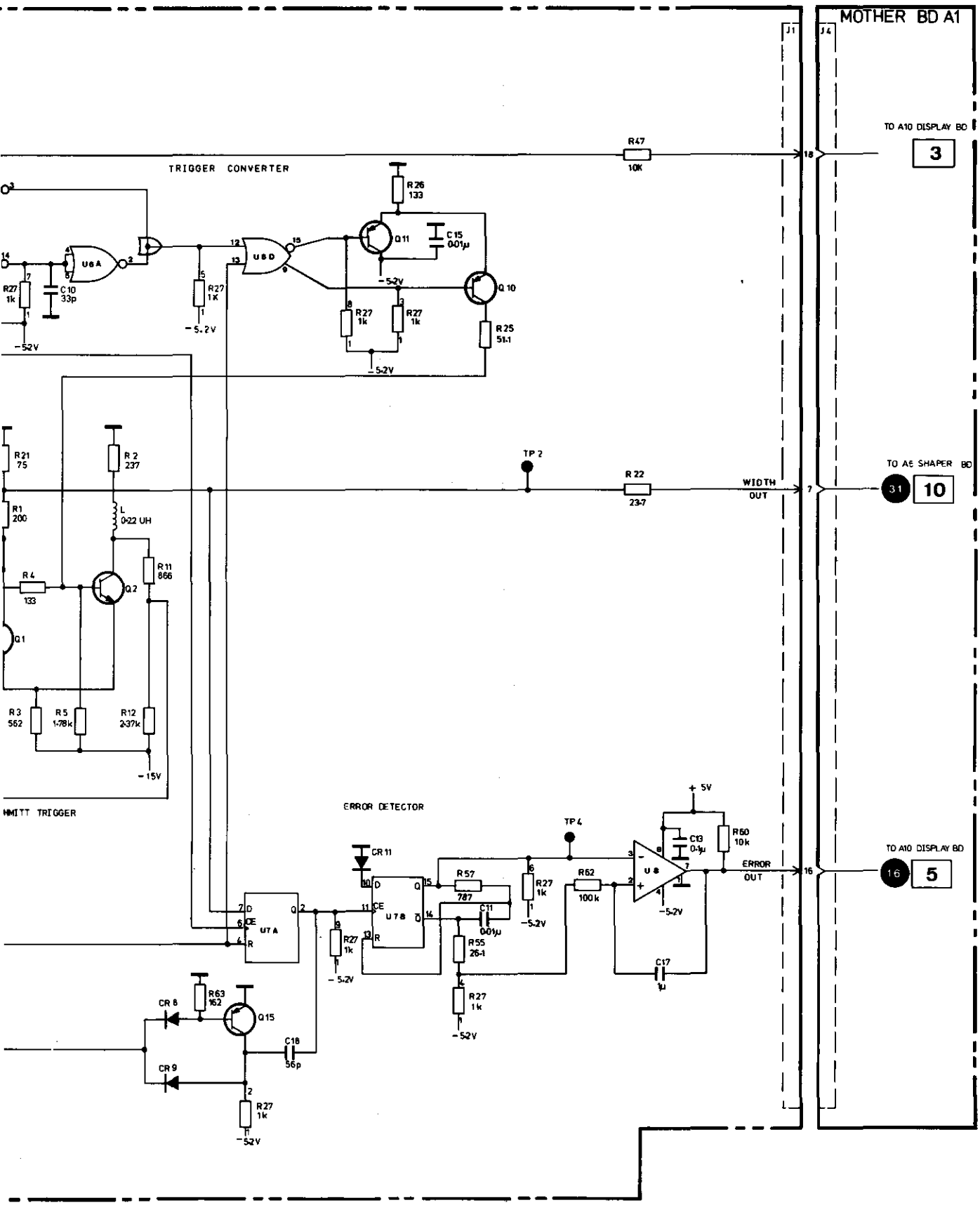

WIDTH GENERATOR A4

9

(08111-66504)

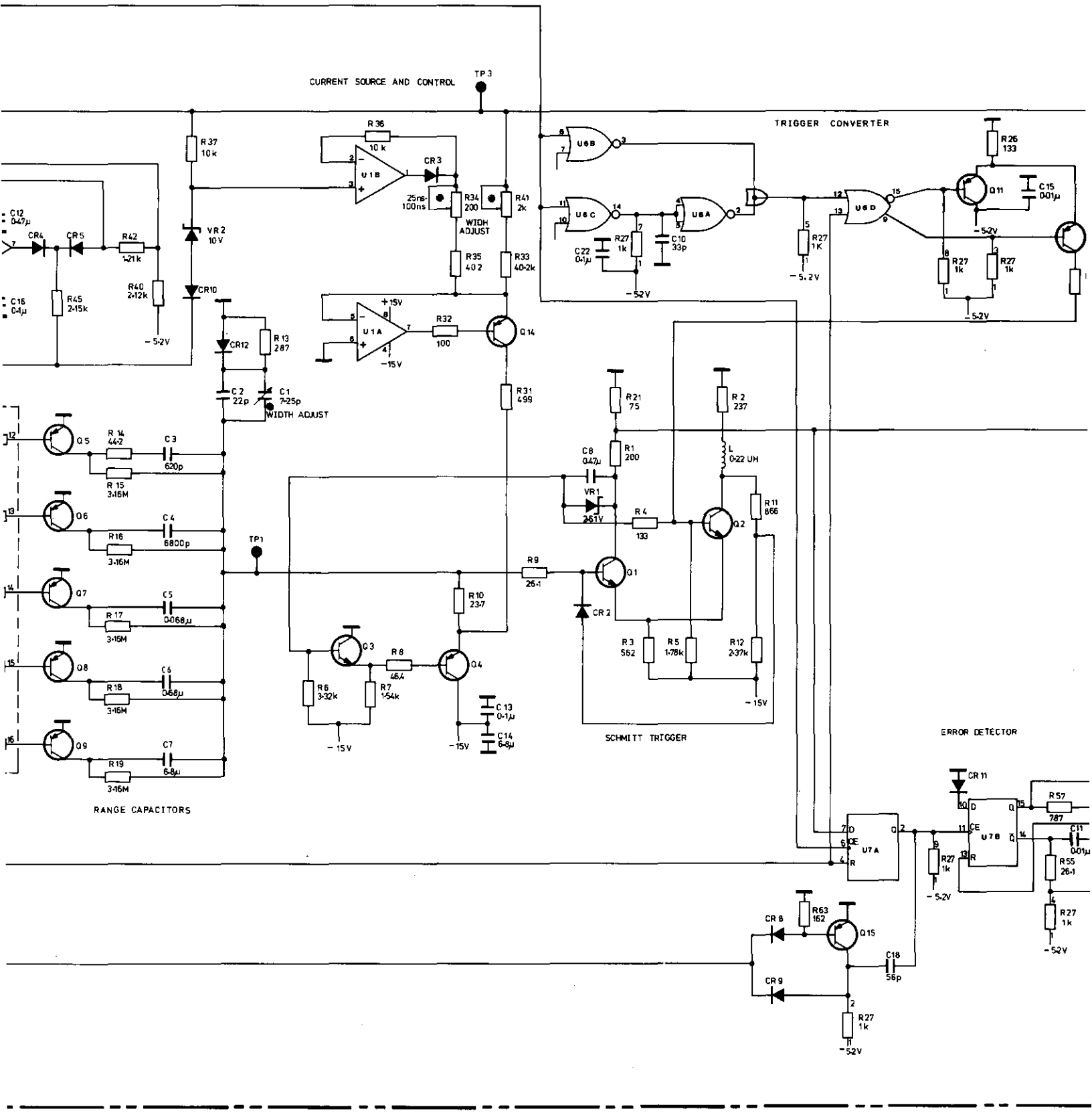

CURRENT SOURCE AND CONTROL
TP3
TRIGGER CONVERTER
R36 10k
U1B
CR3
25ns-100ns
R34 200
WIDH ADJUST
R41 2k
R35 402
R33 40·2k
R37 10k
VR2 10V
CR10
C12 0·47μ
CR4
CR5
R42 1·21k
R40 2·12k
C16 0·1μ
R45 2·15k
-5·2V
U1A
+15V
-15V
R32 100
Q14
CR12
R13 287
C2 22p
C1 7·25p
WIDTH ADJUST
R31 499
U6B
U6C
U6A
U6D
R27 1k
C22 0·1μ
C10 33p
R26 133
Q11
C15 0·01μ
R27 1K
Q5
R14 44·2
C3 620p
R15 3·16M
Q6
C4 6800p
R16 3·16M
Q7
C5 0·068μ
R17 3·16M
Q8
C6 0·68μ
R18 3·16M
Q9
C7 6·8μ
R19 3·16M
RANGE CAPACITORS
TP1
R21 75
R2 237
C8 0·47μ
R1 200
L 0·22 UH
VR1 2·61V
R4 133
Q2
R11 866
R9 26·1
Q1
CR2
R10 23·7
Q3
R8 46·4
Q4
R6 3·32k
R7 1·54k
C13 0·1μ
C14 6·8μ
R3 562
R5 1·78k
R12 2·37k
SCHMITT TRIGGER
ERROR DETECTOR
CR11
U7A
U7B
R57 787
C11 0·01μ
R55 26·1
R63 162
CR8
Q15
CR9
C18 56p

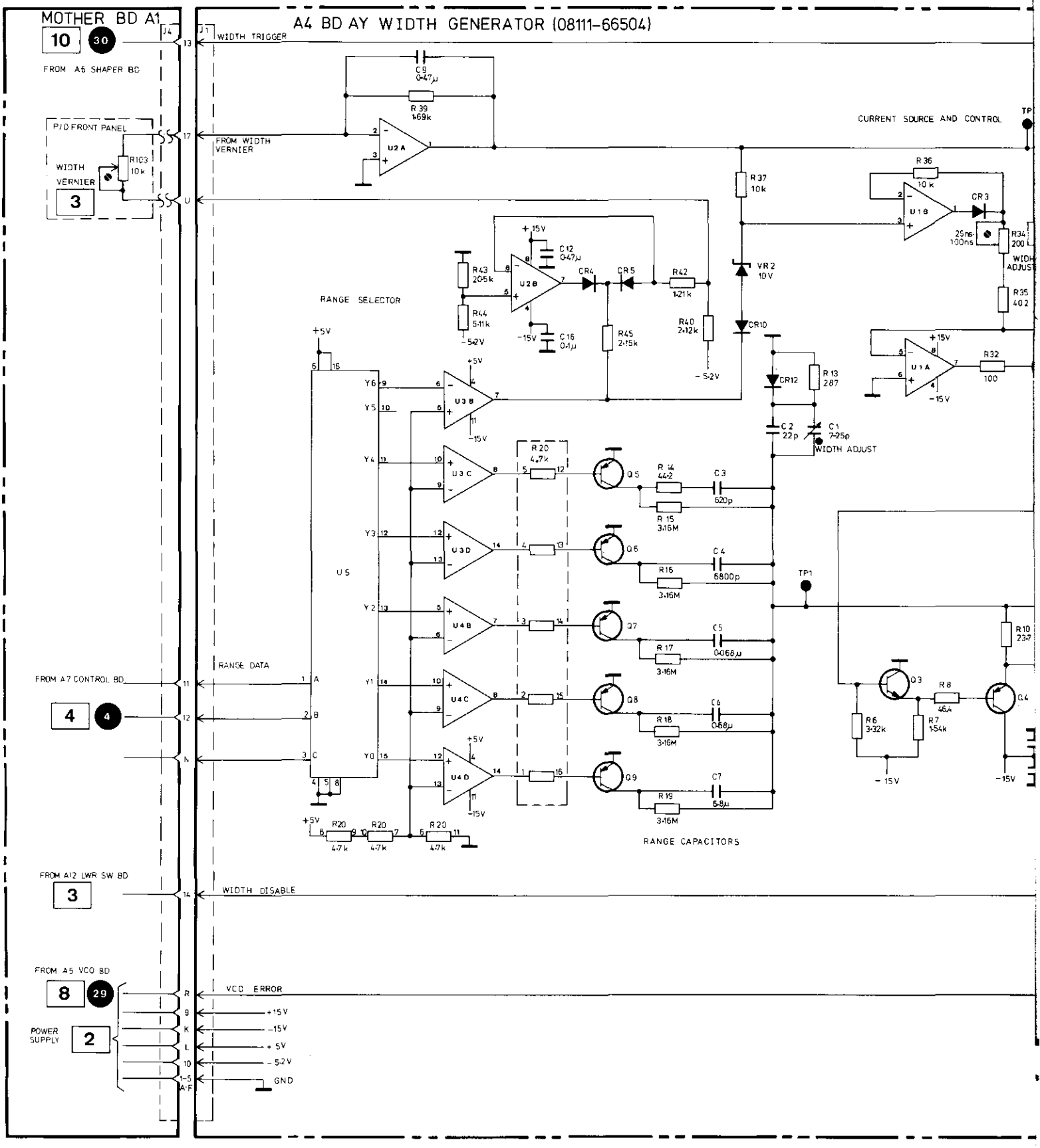
MOTHER BD A1
A4 BD AY WIDTH GENERATOR (08111-66504)
WIDTH TRIGGER
FROM A6 SHAPER BD
P/O FRONT PANEL
WIDTH VERNIER
FROM WIDTH VERNIER
CURRENT SOURCE AND CONTROL
RANGE SELECTOR
RANGE DATA
FROM A7 CONTROL BD
RANGE CAPACITORS
WIDTH ADJUST
FROM A12 LWR SW BD
WIDTH DISABLE
FROM A5 VCO BD
VCO ERROR
POWER SUPPLY
GND

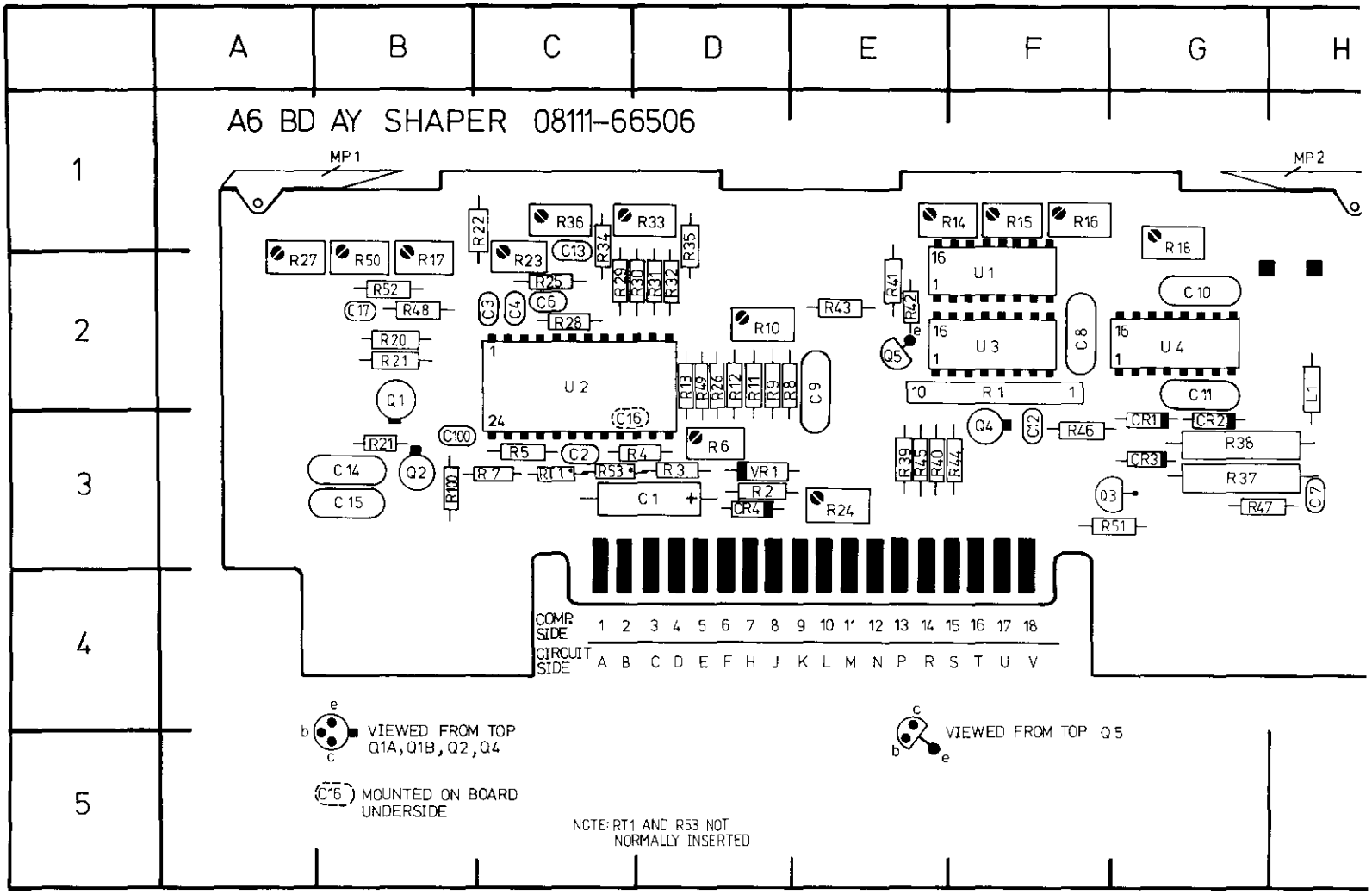

REF DESIG	GRID LOC	REF DESIG	GRID LOC	REF DESIG	GRID LOC	REF DESIG	GRID LOC	REF DESIG	GRID LOC	REF DES
C1	D3	C16	C3	R3	D3	R18	G1/2	R33	D1	R48
C2	C3	C17	B2	R4	C3	R19	B2	R34	C1	R49
C3	C2	CR1	G3	R5	C3	R20	B2	R35	D1	R50
C4	C2	CR2	G3	R6	D3	R21	B2	R36	C1	R51
C5	B2	CR3	G3	R7	C3	R22	B1	R37	G3	R52
C6	C2	CR4	D3	R8	D2	R23	C2	R38	G3	R53
C7	H3	L1	H2	R9	D2	R24	E3	R39	E3	RT1
C8	F2	Q1	B2	R10	D2	R25	C2	R40	E3	U1
C9	E2	Q2	B3	R11	D2	R26	D2	R41	E2	U3
C10	G2	Q3	F3	R12	D2	R27	A2	R42	E2	U4
C11	G2	Q4	F3	R13	D2	R28	C2	R43	E2	VR1
C12	F3	Q5	E2	R14	E1	R29	C2	R44	F3	
C13	C1	R1	F3	R15	F1	R30	C2	R45	E3	
C14	B3	R2	D3	R16	F1	R31	D2	R46	F3	
C15	B3	R3	D3	R17	B2	R32	D2	R47	G3	

10

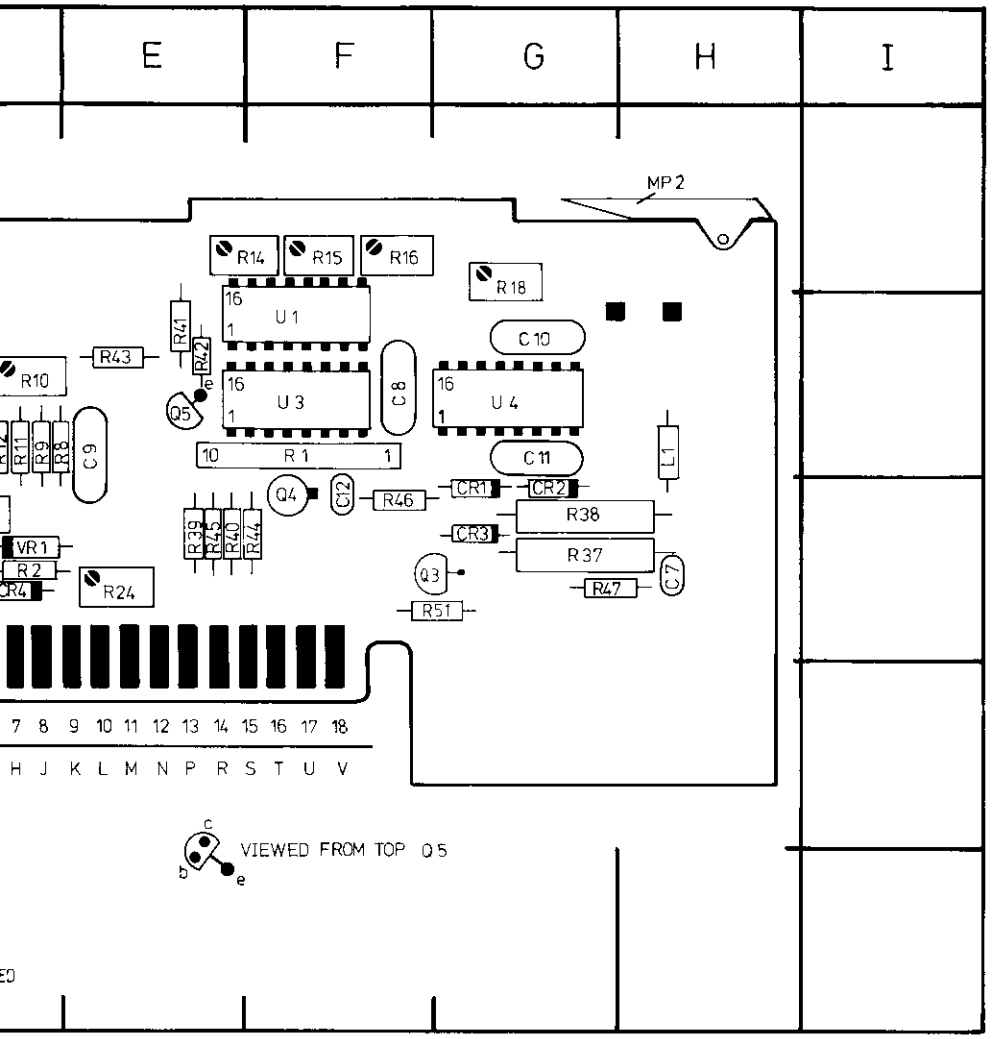

REF DESIG	GRID LOC	REF DESIG	GRID LOC	REF DESIG	GRID LOC
R18	G1/2	R33	D1	R48	B2
R19	B2	R34	C1	R49	D2
R20	B2	R35	D1	R50	B1/2
R21	B2	R36	C1	R51	G3
R22	B1	R37	G3	R52	B2
R23	C2	R38	G3	R53*	C3
R24	E3	R39	E3	RT1*	C3
R25	C2	R40	E3	U1	F2
R26	D2	R41	E2	U3	F2
R27	A2	R42	E2	U4	G2
R28	C2	R43	E2	VR1	D3
R29	C2	R44	F3		
R30	C2	R45	E3		
R31	D2	R46	F3		
R32	D2	R47	G3		

SERVICE BLOCK 9
SHAPER BOARD A6 10

THEORY OF OPERATION

General

The function of the Shaper board is to process the input signal delivered by either the VCO (A5) if in function mode or Width board (A4) if in pulse mode. Its main operational features include triangle to sinewave conversion and a pulse transition time speed up circuit. This is operative for both pulse and square waveforms.

Additional features of the Shaper are a 1:10 attenuation stage for all output signals controlled by a simple external reference voltage (potentiometer), a level shifter enabling positive and negative offset output signals and a normal/complement switching facility.

The OUTPUT signal from A6 is fed to the Output board (A8) and the TRIGGER OUTPUT goes directly to the front panel connector.

OPERATION

The most significant part of the board is the IC-U2 which performs the signal shaping and conversion functions. A simplified diagram of the board is shown in Figure 8–9–1 and this clearly illustrates the significance of U2. The various IC capabilities are enabled by control inputs, these include the two mode select pins which enable either linear preamplifier mode (for triangular waveforms), triangle to sine conversion of fast pulse. This last mode requires the application of an EECL (Emitter Emitter Coupled Logic) level input signal whereas the "triangle and sine" modes require the application of normal and complement triangular waveforms. Additional control inputs enable NORM/COMPLEMENT control (Pin 15) and POS/SYMMETRICAL/NEG (pins 10 and 11) biasing.

Apart from U1 and its input, biasing and adjustment components, the two remaining significant circuit elements comprising the board are the input stage for square or pulse operation – U3, Q4, Q5, etc. – and the output or "current mirror" stage.

Square/Pulse Input Stage

Either the TRIGGER IN or the WIDTH IN signal is selected, selection depends on U1B and U3B (WIDTH DISABLE) pin 11 status. Q4 converts the incoming trigger signal to an ECL level and Q5 changes this to the special EECL levels (–0.6 V for "low" and 0 V for "high"). The TRIGGER OUTPUT signal is derived from Q4 emitter, and converted from ECL to TTL by A6 U4.

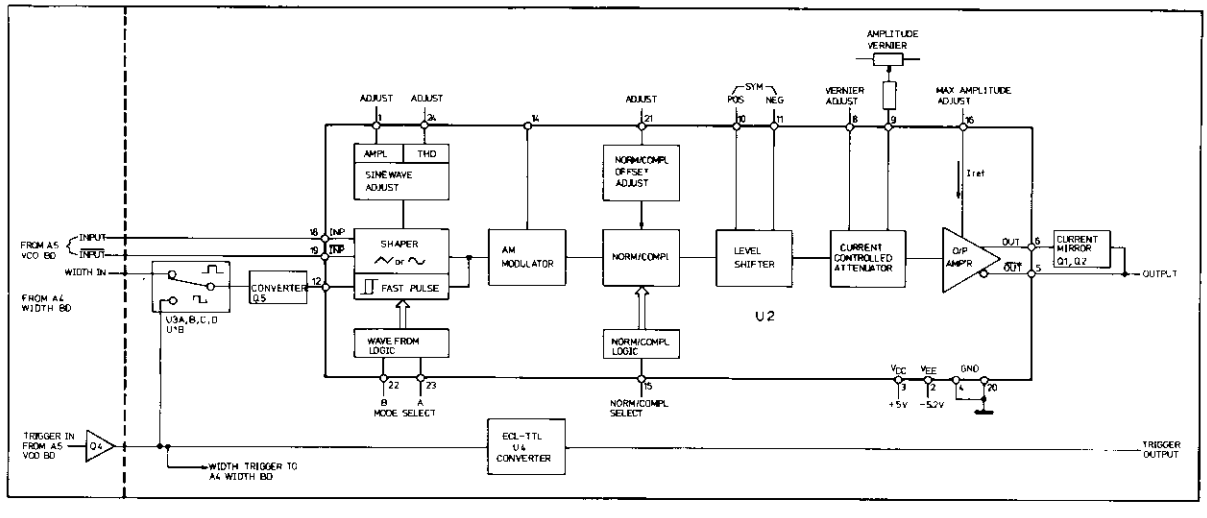

Figure 8–9–1. Simplified Shaper Board Block Diagram

Output Stage (Current Mirror) or)

The output waveforms from U2 comprise differential current stages, by summing these with a "current mirror", undesirable offset effects are reduced to zero and a doubling of the available output signal amplitude is achieved. The operating principle is shown in Figure 8–9–2, the Current mirror performs a current inversion (without this the summing would result in a zero output) and in effect produces an output current which is a true "reflection" of its input current provided that Q1A and Q1B are a matched pair.

By summing the differential output currents, the quiescent currents I_q and their effect is eliminated.

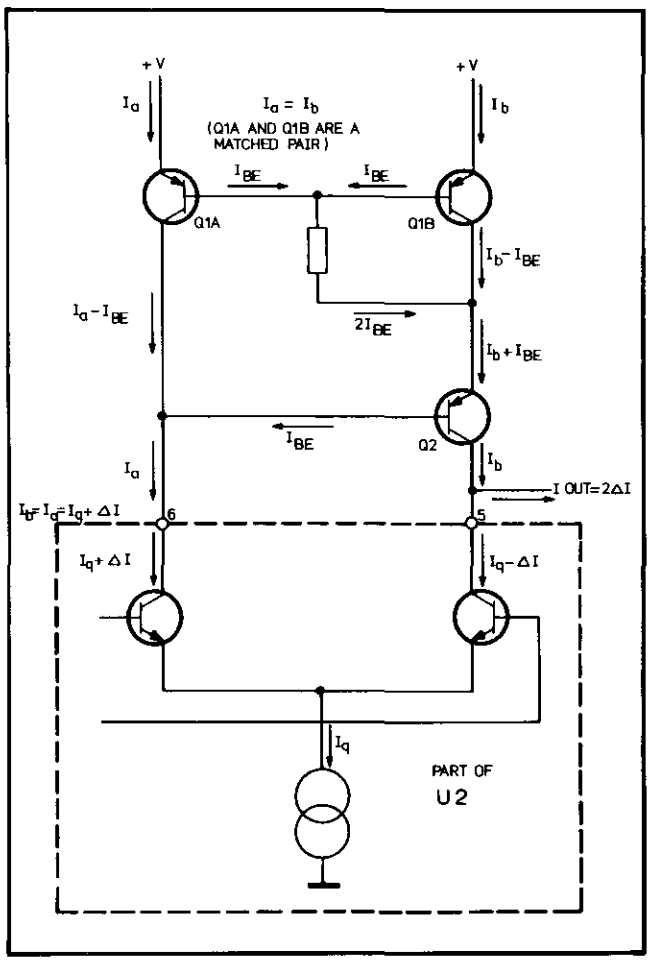

Figure 8–9–2. Current Mirror Operating Principle

TROUBLESHOOTING

General

As a first step confirm that the problem is in fact at the Shaper board by ensuring that the required input signals as shown in Figure 8–9–3 are present.

Once these conditions are confirmed check that the appropriate adjustment potentiometer is not open or short circuited since this type of fault can cause a failure condition which appears to come from U2.

If maximum signal amplitude is not obtainable check that the voltage across VR1 is at least +5.12 V. The output amplitude level from A6 for all waveforms should be approximately 500 mV_{pp} when the front panel AMPLITUDE vernier is fully CW.

Current Mirror

To confirm correct operation check that the signal levels at Q1A and A1B emitters are the same (the transistors are a matched pair).

Signal Output in Pulse or Square Waveform

If a fault is seen only when in pulse or squarewave then check that the logic conditions of gates U3A, B, C and D is in accordance with Table 8–9–1. These levels are ECL and can be checked with an ECL probe.

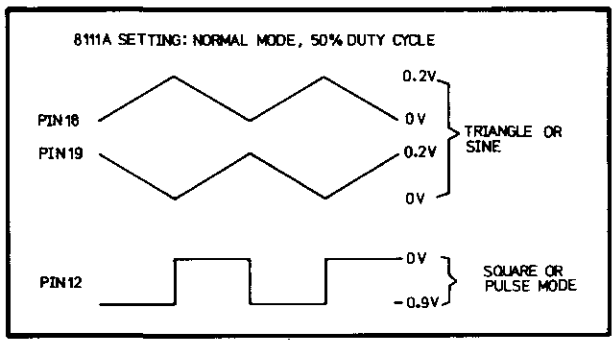

Figure 8–9–3. Input Signals

Waveform and Output Mode Selection

The various control signal logic levels input to IC U2 can be checked against Tables 8–9–2 and 8–9–3. The logic levels in the tables are all TTL.

Table 8–9–1. Waveform and Output Mode Selection

8111A Setting	U3/5 R11	U3/14	U3/6	U1B/4 → 3
⌃ ∿	H	L	H	non conducting
⊓	H	L	L	conducting
⎍	L	H	H	conducting

Table 8–9–2.

8111A	U2/23	U2/22
⌃	L	L
∿	L	H
⊓ ⎍	H	H

Table 8–9–3.

8111A Setting	U2/15
NORMAL, POS or SYM	L
NORMAL, NEG	H
COMPL, NEG	L
COMPL, POS or SYM	H

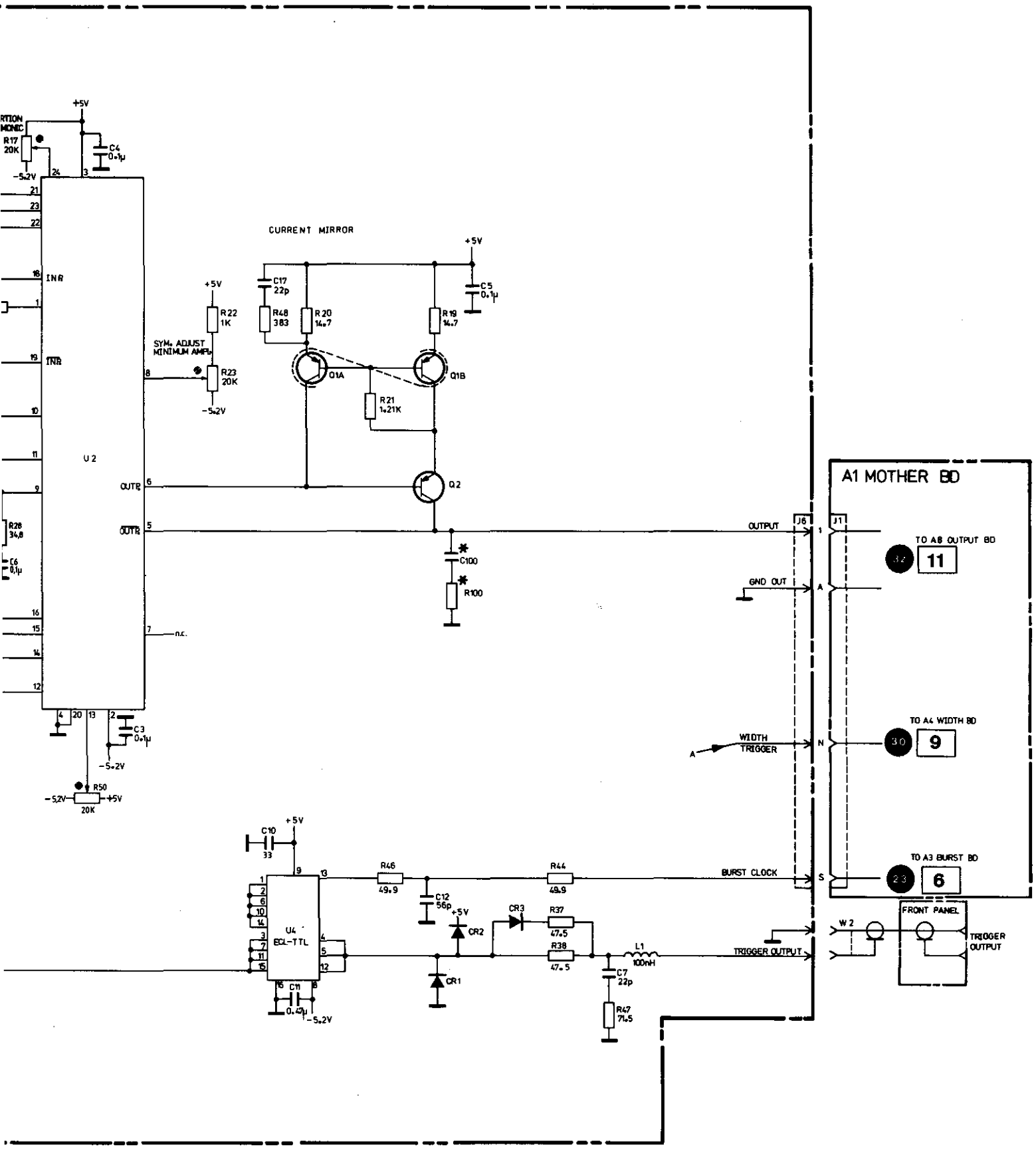

SHAPER BOARD A6 **10**

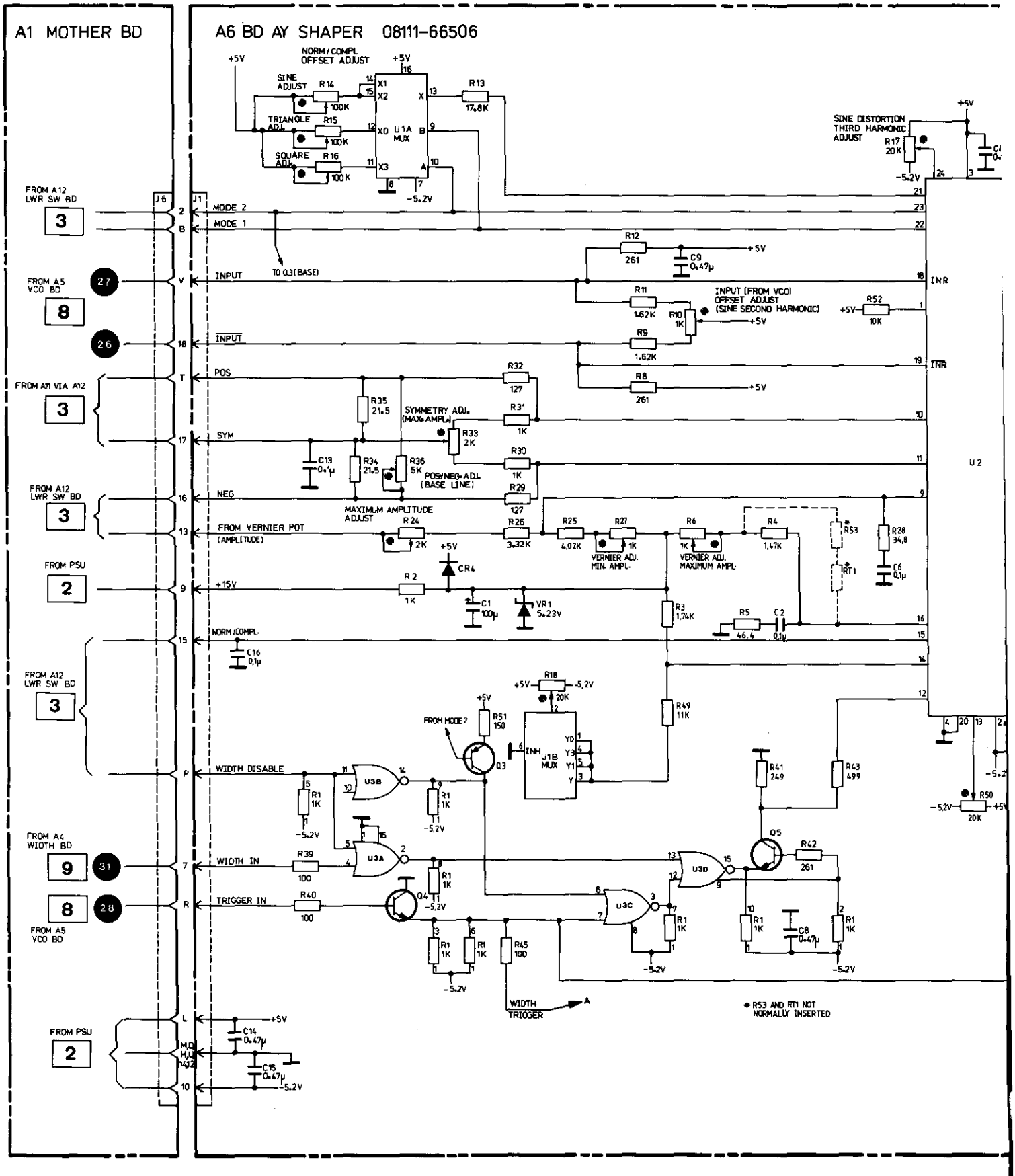
A1 MOTHER BD
A6 BD AY SHAPER 08111-66506
NORM/COMPL OFFSET ADJUST
SINE ADJUST
TRIANGLE ADJ.
SQUARE ADJ.
U1A MUX
SINE DISTORTION THIRD HARMONIC ADJUST
FROM A12 LWR SW BD
FROM A5 VCO BD
FROM A11 VIA A12
FROM PSU
FROM A4 WIDTH BD
MODE 2
MODE 1
INPUT
TO Q3 (BASE)
INPUT (FROM VCO) OFFSET ADJUST (SINE SECOND HARMONIC)
POS
SYM
NEG
SYMMETRY ADJ. (MAX. AMPL.)
POS/NEG-ADJ. (BASE LINE)
MAXIMUM AMPLITUDE ADJUST
FROM VERNIER POT (AMPLITUDE)
VERNIER ADJ. MIN. AMPL.
VERNIER ADJ. MAXIMUM AMPL.
+15V
NORM/COMPL.
WIDTH DISABLE
WIDTH IN
TRIGGER IN
FROM MODE 2
WIDTH TRIGGER
* R53 AND RT1 NOT NORMALLY INSERTED

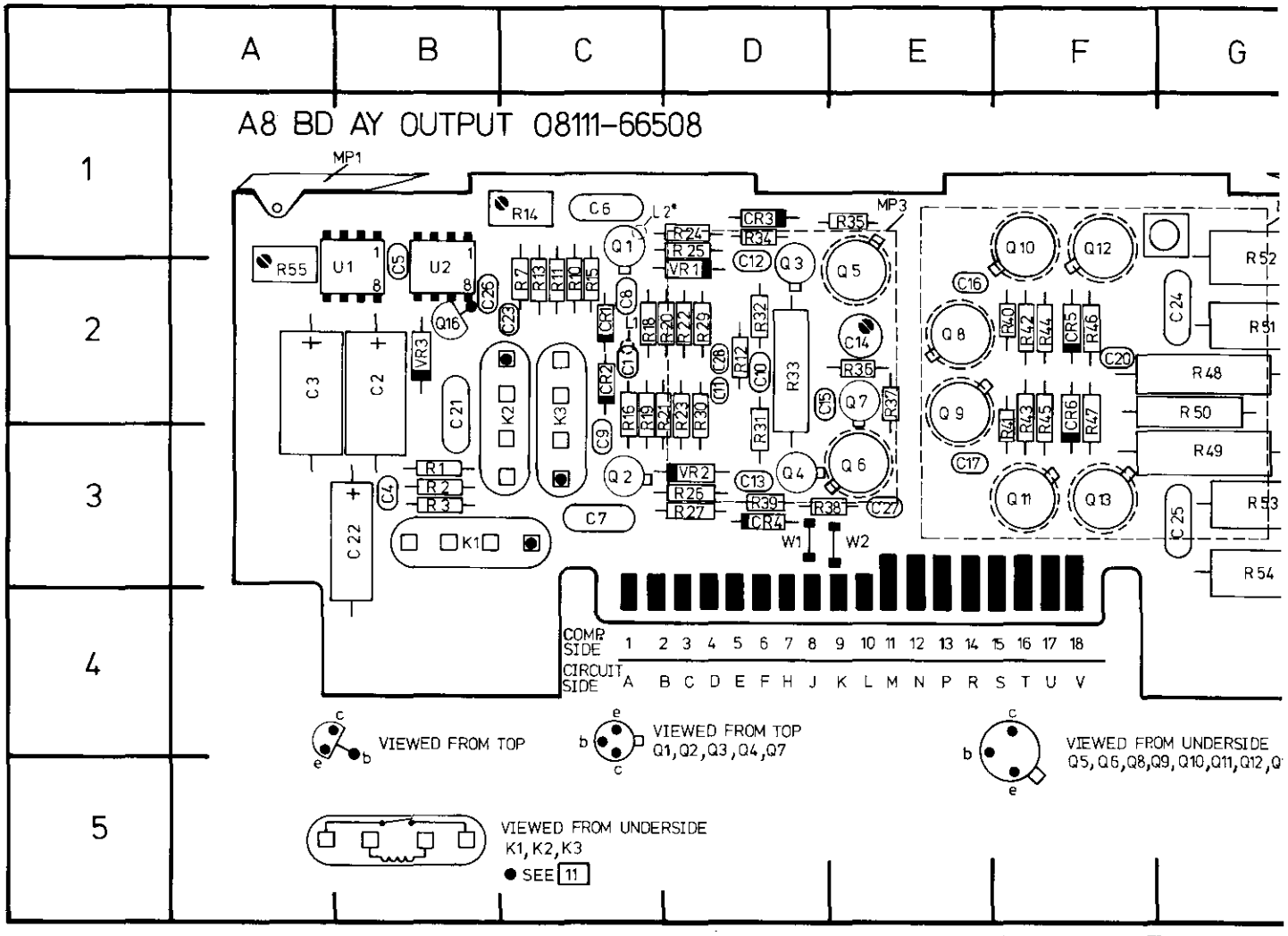

REF DESIG	GRID LOC	REF DESIG	GRID LOC	REF DESIG	GRID LOC	REF DESIG	GRID LOC	REF DESIG
C1	C2	C16	E2	CR3	D1	Q8	E2	R14
C2	B2	C17	E3	CR4	D3	Q9	E2	R15
C3	A2	C18	H2	CR5	F2	Q10	F1	R16
C4	B3	C19	H3	CR6	F2	Q11	F3	R18
C5	B2	C20	F2	K1	B3	Q12	F1	R19
C6	C1	C21	B2	K2	B2	Q13	F3	R20
C7	C3	C22	B3	K3	C2	Q16	B2	R21
C8	C2	C23	C2	L1	C2	R1	B3	R22
C9	C3	C24	G2	Q1	C1	R2	B3	R23
C10	D2	C25	G3	Q2	C3	R3	B3	R24
C11	D2	C26	B2	Q3	D2	R7	C2	R25
C12	D1	C27	E3	Q4	D4	R10	C2	R26
C13	D3	C28	D2	Q5	E2	R11	C2	R27
C14	E2	CR1	C2	Q6	E3	R12	D2	R29
C15	D2	CR2	C2	Q7	E2	R13	C2	R30

11

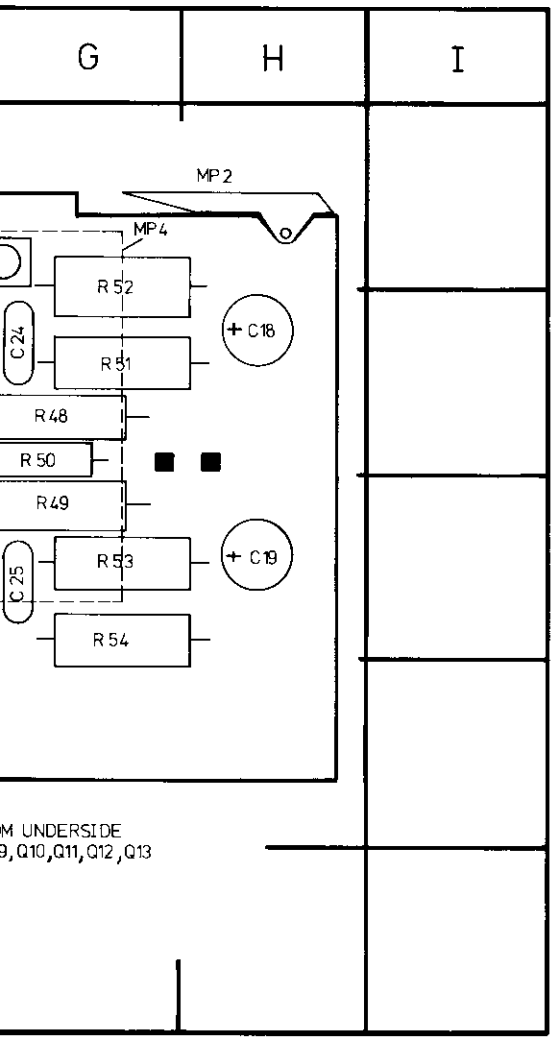

REF DESIG	GRID LOC	REF DESIG	GRID LOC
R14	C1	R31	D3
R15	C2	R32	D2
R16	C2	R33	D2
R18	C2	R34	D1
R19	C2	R35	E1
R20	C2	R36	E2
R21	C2	R37	E3
R22	D2	R38	D3
R23	D2	R39	D3
R24	D1	R40	F2
R25	D1	R41	F3
R26	D3	R42	F2
R27	D3	R43	F2
R29	D2	R44	F2
R30	D2	R45	F2

REF DESIG	GRID LOC
R46	F2
R47	F2
R48	G2
R49	G3
R50	G2
R51	G2
R52	G2
R53	G3
R54	G4
R55	A2
U1	B2
U2	B2
VR1	D2
VR2	D3
VR3	B2
W1	D3
W2	E3

SERVICE BLOCK 10
OUTPUT BOARD A8 11

THEORY OF OPERATION

General

The main functions of the Output board are to amplify the signal derived from the Shaper (A6) and add (or subtract) the required offset voltage as set by the front panel vernier. In addition, 20 dB of attenuation can be applied to the signal (if – 20 dB pushbutton pressed) by a passive attenuator. The output signal from A8 is fed to the Upper Switch board (A11) where it is either further attenuated (40 dB) or output directly to the front panel socket.

The main feature of board A8 is the actual output amplifier, this is in principle an inverting operational amplifier and is shown in simplified form in Figure 8–10–1. The voltage gain, as can be seen in the figure, is determined by Rin and Rfb, Av = Rfb/Rin. The main amplifier (or HF AMP) has offset voltages and currents which have to be compensated for. This is achieved by U1 and U2. U1 compares the voltage at the inverting input of HF AMP with ground and maintains it at zero difference by supplying a current through Rc and therefore ensuring a "virtual ground". U2 detects any undesired offset voltage at HF AMP output via the feedback network RinxV/RfbxV and compensates it via the non-inverting input.

The offset Input (derived via the offset vernier and fixed 20 dB attenuator as required) is added to the HF AMP output via R offs and U2 etc.

As can be seen from Figure 8–10–2, the HF Amplifier can be considered as three stages – Input, Voltage Gain and Output. The operation of these will now be described:

Input Stage

The input signal (I/P–) is amplified by Q1, Q2 (common base amplifiers), CR1 and CR2 provide the required bias voltages. The offset signal (I/P+) is applied between CR1 and CR2, which ensures a constant reference point. The output signals, produced across R24, R27, are applied to the bases of Q3 and Q4.

Voltage Gain Stage

Transistors Q3, Q4 (operating as emitter follower) drive Q5 and Q6 respectively to provide the actual voltage amplification.

Output Stage

The emitter followers Q10, Q12 and Q11, Q13 decouple the low output impedance of R out from the voltage gain stage.

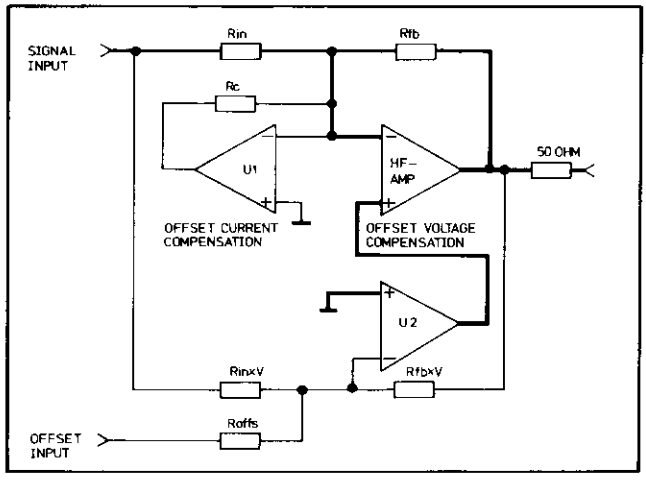

Figure 8–10–1. Simplified Output Amplifier

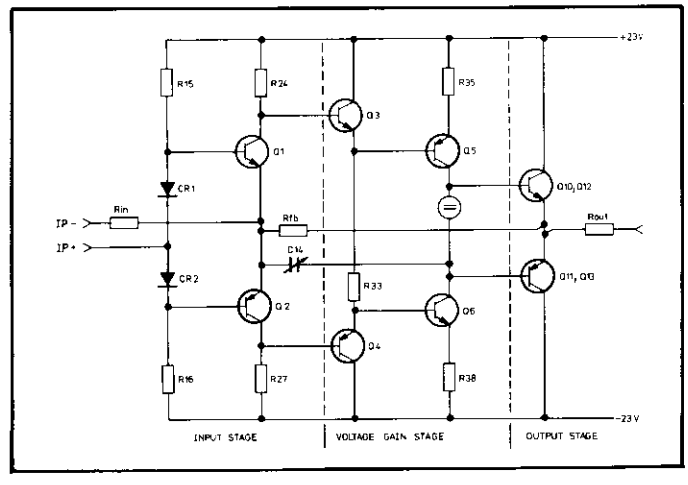

Figure 8–10–2. HF Amplifier Simplified Diagram

TROUBLESHOOTING

CAUTION

Do not operate without heat sinks on board A8. If replacement of one of the transistors Q5–Q13 is necessary, first remove all heat sink securing screws, then plate or bracket and finally, if necessary, the transistor adaptors. Do not attempt to remove a complete heat-sink assembly i.e. plate and transistor adaptors together since damage to transistors will be likely.

The troubleshooting information is given in two sections, first for the HF AMP and then the Offset Control.

HF Amplifier

The following hints will help to isolate a fault in the 8111A output amplifier.

The voltages, shown on Service sheet 11 in blue, should be measured by a DVM with the low terminal connected to ground.
The following test conditions are required:

A6 Shaper board disconnected from connector
20 dB AMPL-ATTENUATOR pushbutton pressed
Offset Vernier set to 0 V

If the voltage between CR1 and CR2 (2) is fully neagtive (approx. –15 V) check Q2, Q4 and Q6. If it is fully positive (approx. +15 V) check Q1, Q3 and Q5. If Q10/Q11 or Q12/Q13 fail (emitter/collector short circuit) the 8111A regulated power supply rails will switch off. If it is necessary to replace any of the output stage transistors Q8–Q13, check that CR5 and CR6 are not defective.

Distorted Leading and Trailing Edges

If the output from A8 in pulse or square wave has distorted leading or trailing edges, and the input signal from A6 is undistorted, then make the following test:

Set the 8111A to high output amplitude (16 V, Symmetrical)

If the leading edge is distorted, check Q3 and Q5.

If the trailing edge is distorted, check Q4 and Q6.

Offset Control

The offset of the 8111A output signal depends on the current through R7.

1 The offset control voltage at the offset input of A8 varies: from –0.9 V for + 8 V offset at the 8111A output to +0.9 V for –8 V offset at the 8111A output.

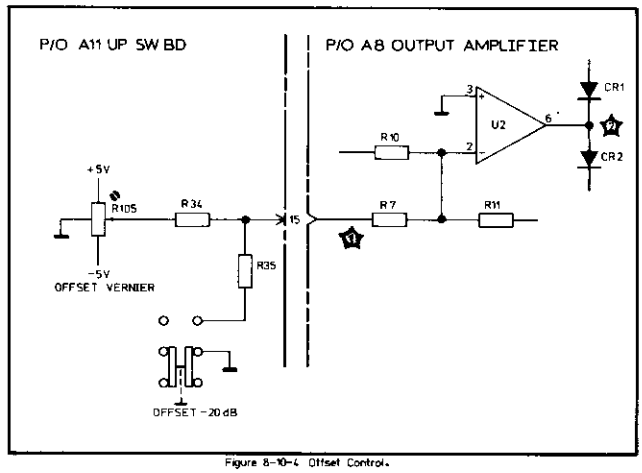

Figure 8–10–4. Offset Control.

Figure 8–10–3. Offset Control

2 Due to high internal gain of the HF-AMP, the voltage at its non-inverting input varies by only approximately 4 mV about 0 V over the whole offset range. If the voltage is at either the maximum positive or negative rail value (± 15 V) then, either U2 or the HF amplifier is defective.

An offset error or failure can also be caused by a fault at U1.

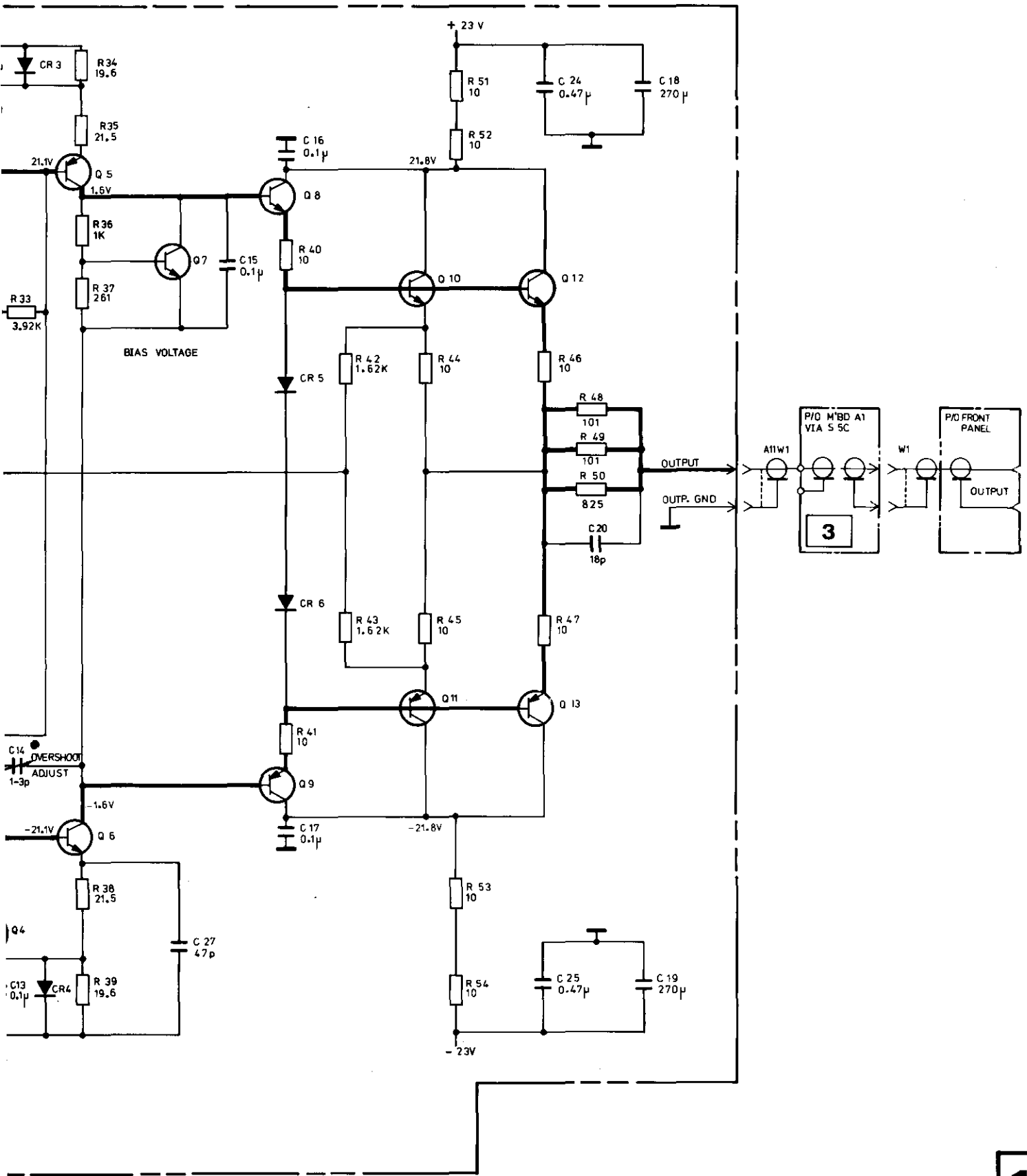

OUTPUT BOARD A8 **11**

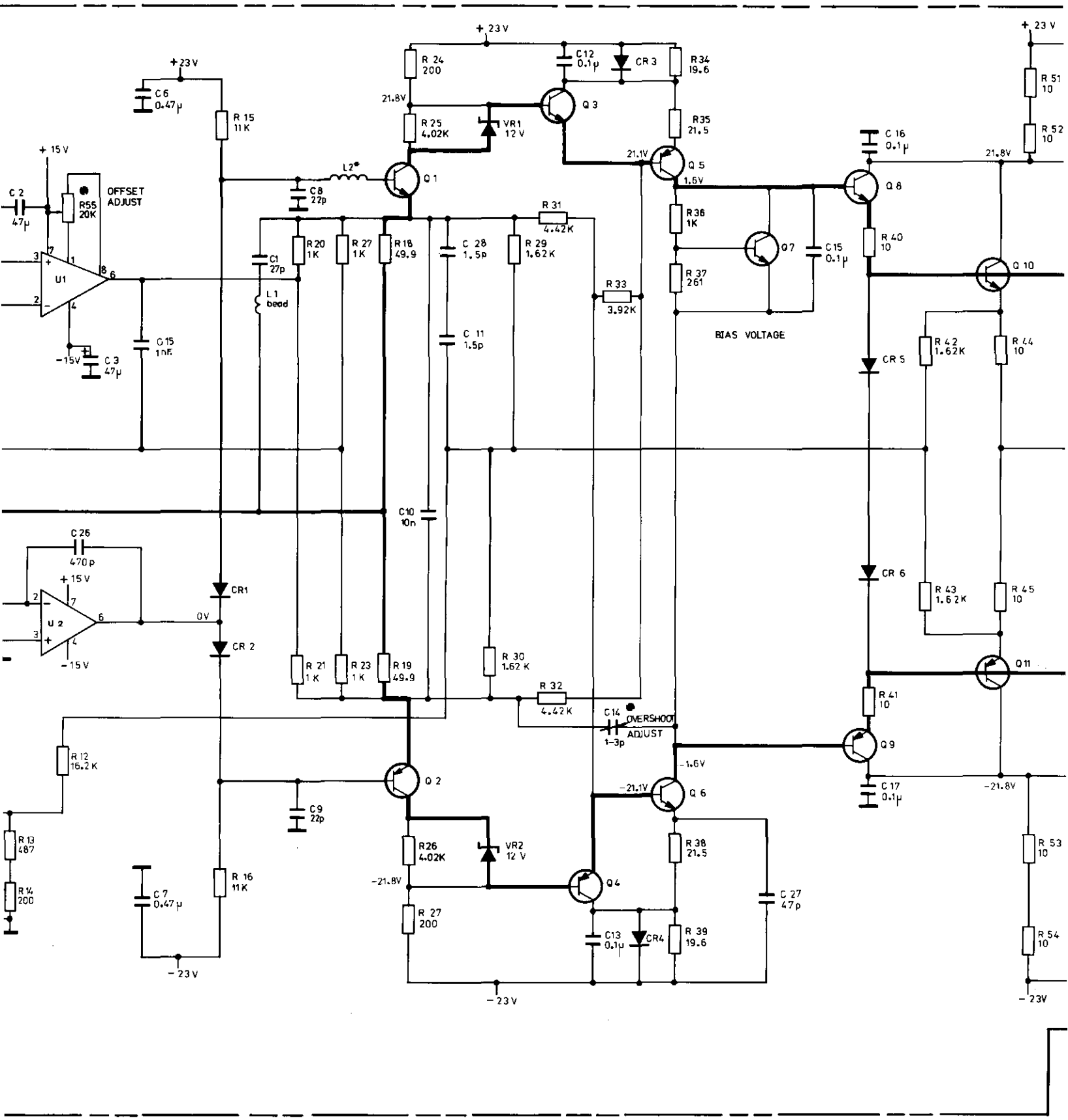

+23V
C6 0.47μ
R15 11K
+15V
C2 47μ
R55 20K
OFFSET ADJUST
U1
-15V
C3 47μ
C15 1nF
R24 200
21.8V
R25 4.02K
VR1 12V
C12 0.1μ
CR3
R34 19.6
Q3
R35 21.5
21.1V
Q5
1.6V
L2*
Q1
C8 22p
R31 4.42K
R20 1K
R27 1K
R18 49.9
C28 1.5p
R29 1.62K
C1 27p
L1 bead
R33 3.92K
C11 1.5p
R36 1K
Q7
C15 0.1μ
R37 261
BIAS VOLTAGE
C16 0.1μ
Q8
R40 10
Q10
R51 10
R52 10
21.8V
R42 1.62K
R44 10
CR5
C10 10n
C26 470p
U2
CR1
0V
CR2
R21 1K
R23 1K
R19 49.9
R30 1.62K
R32 4.42K
C14 1-3p
OVERSHOOT ADJUST
CR6
R43 1.62K
R45 10
Q11
R41 10
Q9
C17 0.1μ
-21.8V
R12 16.2K
Q2
C9 22p
-1.6V
-21.1V
Q6
R13 487
R14 200
R26 4.02K
VR2 12V
-21.8V
Q4
R38 21.5
C27 47p
R53 10
C7 0.47μ
R16 11K
R27 200
C13 0.1μ
CR4
R39 19.6
R54 10
-23V

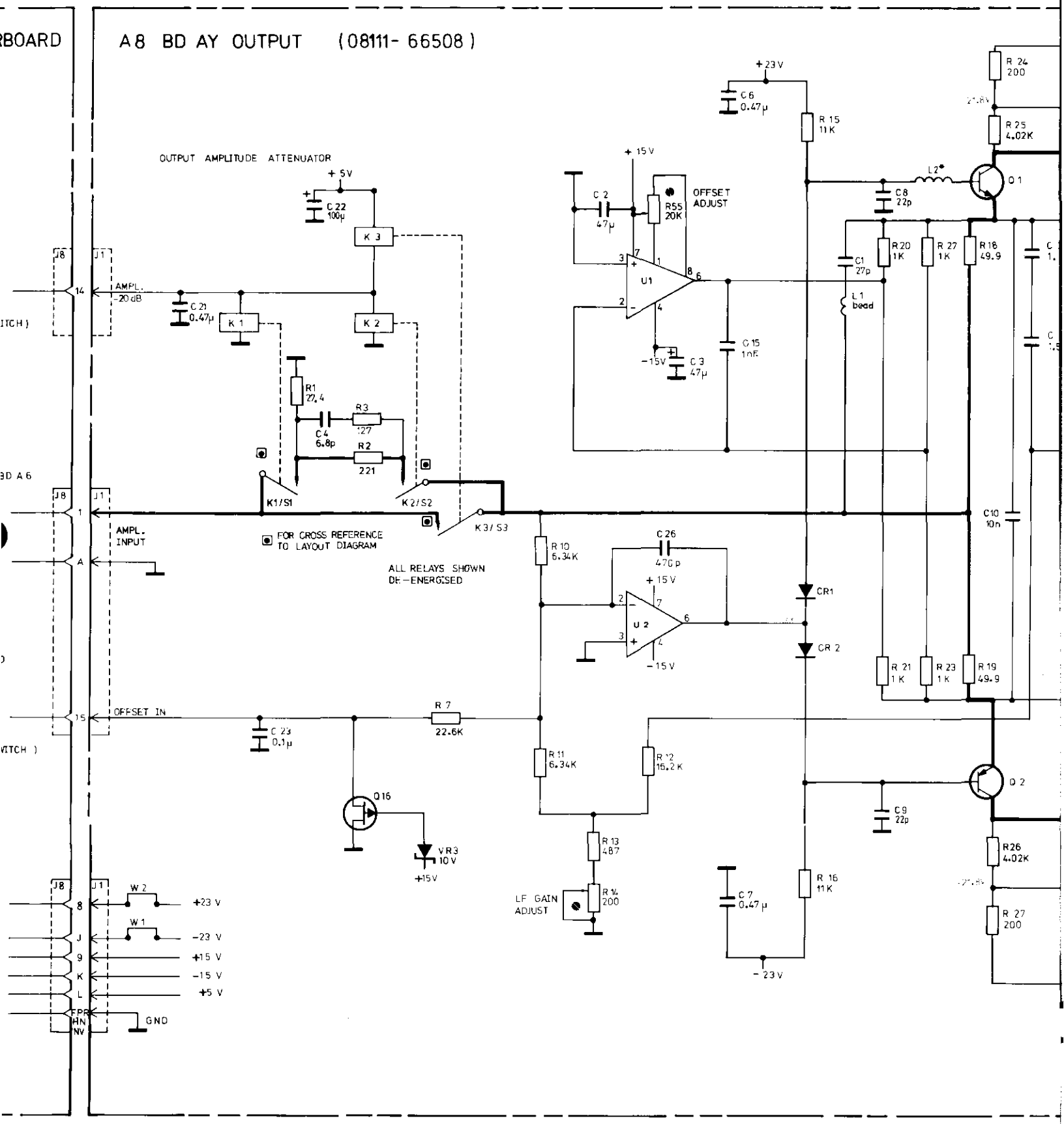

RBOARD
A8 BD AY OUTPUT (08111- 66508)
OUTPUT AMPLITUDE ATTENUATOR
+5V
C22 100µ
K3
K1
K2
C21 0.47µ
AMPL. -20dB
ITCH)
R1 27.4
R3 127
C4 6.8p
R2 221
K1/S1
K2/S2
K3/S3
BD A6
AMPL. INPUT
FOR CROSS REFERENCE TO LAYOUT DIAGRAM
ALL RELAYS SHOWN DE-ENERGISED
OFFSET IN
C23 0.1µ
R7 22.6K
Q16
VR3 10V
+15V
W2
W1
+23 V
-23 V
+15 V
-15 V
+5 V
GND
+15V
C2 47µ
R55 20K
OFFSET ADJUST
U1
-15V
C3 47µ
C15 1nF
+23V
C6 0.47µ
R15 11K
C8 22p
L2*
Q1
R24 200
R25 4.02K
C1 27p
L1 bead
R20 1K
R27 1K
R18 49.9
C10 10n
R10 6.34K
C26 470p
U2
CR1
CR2
R21 1K
R23 1K
R19 49.9
R11 6.34K
R12 15.2K
Q2
C9 22p
R13 487
R14 200
LF GAIN ADJUST
C7 0.47µ
R16 11K
-23V
R26 4.02K
R27 200

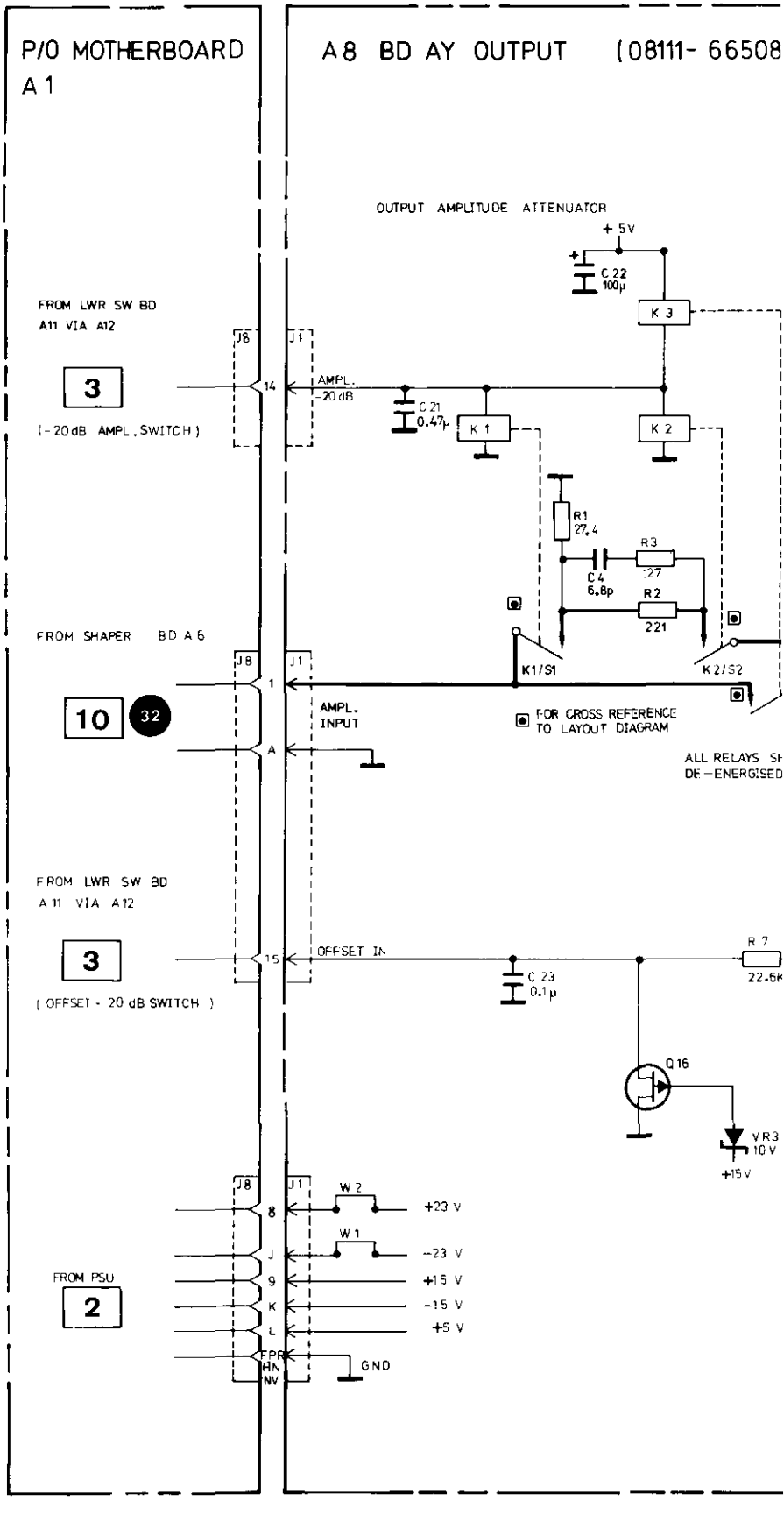
P/O MOTHERBOARD
A 1
A8 BD AY OUTPUT (08111- 66508
OUTPUT AMPLITUDE ATTENUATOR
+5V
C 22
100µ
K 3
FROM LWR SW BD
A11 VIA A12
3
(-20dB AMPL. SWITCH)
J8
J1
14
AMPL.
-20dB
C 21
0.47µ
K 1
K 2
R1
27.4
R3
:27
C 4
6.8p
R2
221
FROM SHAPER BD A 6
10
32
1
A
AMPL.
INPUT
K1/S1
K2/S2
FOR CROSS REFERENCE
TO LAYOUT DIAGRAM
ALL RELAYS SH
DE-ENERGISED
FROM LWR SW BD
A 11 VIA A12
3
(OFFSET - 20 dB SWITCH)
15
OFFSET IN
C 23
0.1µ
R 7
22.6K
Q 16
VR3
10 V
+15V
W 2
+23 V
W 1
-23 V
FROM PSU
2
8
J
9
K
L
+15 V
-15 V
+5 V
GND

Product Line Sales/Support Key

Key	Product Line
A	Analytical
CM	Components
C	Computer Systems Sales only
CH	Computer Systems Hardware Sales & Services
CS	Computer Systems Software Sales & Services
E	Electronic Instruments & Measurement Systems
M	Medical Products
MP	Medical Products Primary SRO
MS	Medical Products Secondary SRO
P	Personal Computing Products
*	Sales only for specific product line
**	Support only for specific product line

IMPORTANT: These symbols designate general product line capability. They do not insure sales or support availability for all products within a line, at all locations. Contact your local sales office for information regarding locations where HP support is available for specific products.

HP distributors are printed in italics.

ANGOLA
Telectra
Empresa Técnica de Equipamentos Eléctricos, S.A.R.L.
R. Barbosa Rodrigues, 41-I DT.
Caixa Postal 6487
LUANDA
Tel: 35515,35516
E,M,P

ARGENTINA
Hewlett-Packard Argentina S.A.
Avenida Santa Fe 2035
Martinez 1640 **BUENOS AIRES**
Tel: 798-5735, 792-1293
Telex: 122443 AR CIGY
Cable: HEWPACKARG
A,E,CH,CS,P

Biotron S.A.C.I.y.M
Av Paseo Colon 221, 9 Piso
1399 BUENOS AIRES
Tel: 30-4846, 30-1851, 30-8384
Telex: 17595 BION/AR
M

Fate S.A. I.C.I./Electronica
Venezuela 1326
1095 BUENOS AIRES
Tel: 379026, 379027
Telex: 18137, 22754 ALVAR AR
P

AUSTRALIA

Adelaide, South Australia Office
Hewlett-Packard Australia Pty.Ltd.
153 Greenhill Road
PARKSIDE, S.A. 5063
Tel: 272-5911
Telex: 82536
Cable: HEWPARD Adelaide
A*,CH,CM,,E,MS,P

Brisbane, Queensland Office
Hewlett-Packard Australia Pty.Ltd.
5th Floor
Teachers Union Building
495-499 Boundary Street
SPRING HILL, Queensland 4000
Tel: 229-1544
Telex: 42133
Cable: HEWPARD Brisbane
A,CH,CM,,E,MS,P

Canberra, Australia Capital Territory Office
Hewlett-Packard Australia Pty.Ltd.
121 Wollongong Street
FYSHWICK, A.C.T. 2609
Tel: 80 4244 Telex: 62650
Cable: HEWPARD Canberra
A*CH,CM,E,MS,P

Melbourne, Victoria Office
Hewlett-Packard Australia Pty.Ltd.
31-41 Joseph Street
BLACKBURN, Victoria 3130
Tel: 89-6351
Telex: 31-024
Cable: HEWPARD Melbourne
A,CH,CM,CS,E,MS,P

Perth, Western Australia Office
Hewlett-Packard Australia Pty.Ltd.
141 Stirling Highway
NEDLANDS, W.A. 6009
(effective 28 Sept. 1981:
261 Stirling Highway
CLAREMONT, W.A. 6010)
Tel: 386-5455
Telex: 93859
Cable: HEWPARD Perth
A,CH,CM,,E,MS,P

Sydney, New South Wales Office
Hewlett-Packard Australia Pty.Ltd.
17-23 Talavera Road
P.O. Box 308
NORTH RYDE, N.S.W. 2113
Tel: 887-1611
Telex: 21561
Cable: HEWPARD Sydney
A,CH,CM,CS,E,MS,P

AUSTRIA
Hewlett-Packard Ges.m.b.h.
Grottenhofstrasse 94
Verkaufsburo Graz
A-8052 **GRAZ**
Tel: 21-5-66
Telex: 32375
CH,CM,E*

Hewlett-Packard Ges.m.b.h.
Wehlistrasse 29
P.O. Box 7
A-1205 **VIENNA**
Tel: (222) 35-16-210
Telex: 135823/135066
A,CH,CM,CS,E,MS,P

BAHRAIN
Green Salon
P.O. Box 557
BAHRAIN
Tel: 25503-250950
Telex: 84419
P

Wael Pharmacy
P.O. Box 648
BAHRAIN
Tel: 256123
Telex: 8550 WAEL GJ
M

BELGIUM
Hewlett-Packard Belgium S.A./N.V.
Blvd de la Woluwe, 100
Woluwedal
B-1200 ***BRUSSELS***
Tel: (02) 762-32-00
Telex: 23-494 paloben bru
A,CH,CM,CS,E,MP,P

BRAZIL
Hewlett-Packard do Brasil I.e.C. Ltda.
Alameda Rio Negro, 750
ALPHAVILLE 06400 Barueri SP
Tel: 421-1311
Telex: 011 33872
Cable: HEWPACK Sao Paulo
A,CH,CM,CS,E,MS

Hewlett-Packard do Brasil I.e.C. Ltda.
Avenida Epitacio Pessoa, 4664
22471 **RIO DE JANEIRO-RJ**
Tel: 286-0237
Telex: 021-21905 HPBR-BR
Cable: HEWPACK Rio de Janeiro
A,CH,CM,E,MS,P*

CANADA

Alberta
Hewlett-Packard (Canada) Ltd.
210, 7220 Fisher Street S.E.
CALGARY, Alberta T2H 2H8
Tel: (403) 253-2713
A,CH,CM,E*,MS,P*

Hewlett-Packard (Canada) Ltd.
11620A-168th Street
EDMONTON, Alberta T5M 3T9
Tel: (403) 452-3670
A,CH,CM,CS,E,MS,P*

British Columbia
Hewlett-Packard (Canada) Ltd.
10691 Shellbridge Way
RICHMOND, British Columbia V6X 2W7
Tel: (604) 270-2277
Telex: 610-922-5059
A,CH,CM,CS,E*,MS,P*

Manitoba
Hewlett-Packard (Canada) Ltd.
380-550 Century Street
WINNIPEG, Manitoba R3H 0Y1
Tel: (204) 786-6701
A,CH,CM,E,MS,P*

New Brunswick
Hewlett-Packard (Canada) Ltd.
190 Wilbur Street
MONCTON, New Brunswick E2B 2V0
Tel: (506) 386-1677
Telex: 01931470
CH**

Nova Scotia
Hewlett-Packard (Canada) Ltd.
P.O. Box 931
900 Windmill Road
DARTMOUTH, Nova Scotia B2Y 3Z6
Tel: (902) 469-7820
Telex: 01931470
CH,CM,CS,E*,MS,P*

Ontario
Hewlett-Packard (Canada) Ltd.
552 Newbold Street
LONDON, Ontario N6E 2S5
Tel: (519) 686-9181
Telex: 610-352-1201
A,CH,CM,E*,MS,P*

Hewlett-Packard (Canada) Ltd.
6877 Goreway Drive
MISSISSAUGA, Ontario L4V 1M8
Tel: (416) 678-9430
Telex: 610-492-4246
A,CH,CM,CS,E,MP,P

Hewlett-Packard (Canada) Ltd.
2670 Queensview Dr.
OTTAWA, Ontario K2B 8K1
Tel: (613) 820-6483
Telex: 610-563-1636
A,CH,CM,CS,E*,MS,P*

Quebec
Hewlett-Packard (Canada) Ltd.
17500 South Service Road
Trans-Canada Highway
KIRKLAND, Quebec H9J 2M5
Tel: (514) 697-4232
Telex: 05821521
A,CH,CM,CS,E,MP,P*

Hewlett-Packard (Canada) Ltd.
Les Galeries du Vallon
2323 Boulevard du Versant Nord
STE. FOY, Quebec G1N 4C2
Tel: (418) 687-4570
CH

CHILE
Jorge Calcagni y Cia. Ltda.
Arturo Burhle 065
Casilla 16475
SANTIAGO 9
Tel: 222-0222
Telex: Public Booth 0001
A,CM,E,M

Olympia (Chile) Ltd.
Rodrico de Araya 1045
Casilla 256-V
SANTIAGO 21
Tel: 225-5044
Telex: 40565 OLYMP CL
C,P

CHINA, People's Republic of
CEIEC Inc.
44 Beiwei Rd.
***BEIJING**, China*
Telex: 22475 CEIEC CN
A,CH,CM,CS,E,P

COLOMBIA
Instrumentación
H. A. Langebaek & Kier S.A.
Apartado Aéreo 6287
BOGOTÁ 1, D.E.
Carrera 7 No. 48-75
BOGOTA, 2 D.E.
Tel: 287-8877
Telex: 44400
Cable: AARIS Bogota
A,CM,E,M,P

COSTA RICA
Cientifica Costarricense S.A.
Avenida 2, Calle 5
San Pedro de Montes de Oca
Apartado 10159
SAN JOSÉ
Tel: 24-38-20, 24-08-19
Telex: 2367 GALGUR
CM,E,M

CYPRUS
Telerexa Ltd.
P.O. Box 4809
14C Stassinos Avenue
NICOSIA
Tel: 62698
Telex: 2894 Levidocy
E,M,P

CZECHOSLOVAKIA
Hewlett-Packard
Obchodni Zastupitelstvi v CSSR
Post. schranka 27
*CS-118 01 **PRAHA 011***
Tel: 66-296
Telex: 121353 IHC

DENMARK
Hewlett-Packard A/S
Datavej 52
DK-3460 **BIRKEROD**
Tel: (02) 81-66-40
Telex: 37409 hpas dk
A,CH,CM,CS,E,MS,P

Hewlett-Packard A/S
Navervej 1
DK-8600 **SILKEBORG**
Tel: (06) 82-71-66
Telex: 37409 hpas dk
CH,CM,E

ECUADOR
CYEDE Cia. Ltda.
Avenida Eloy Alfaro 1749
Casilla 6423 CCI
QUITO
Tel: 450-975, 243-052
Telex: 2548 CYEDE ED
A,CM,E,P

Hospitalar S.A.
Robles 625
Casilla 3590
QUITO
Tel: 545-250, 545-122
Telex: 2485 HOSPTL ED
Cable: HOSPITALAR-Quito
M

EGYPT
International Engineering Associates
24 Hussein Hegazi Street
Kasr-el-Aini
CAIRO
Tel: 23-829
Telex: 93830
CH,CS,E,M

Informatic For Systems
22 Talaat Harb Street
CAIRO
Tel: 759006
Telex: 93938 FRANK UN
CH,CS,P

Egyptian International Office for Foreign Trade
P.O.Box 2558
CAIRO
Tel: 984935
Telex: 93337 EGPOR
P

EL SALVADOR
IPESA de El Salvador S.A.
Boulevard de los Heroes 1148
SAN SALVADOR
Tel: 252787, 259621
Telex: Public Booth 20107
A,CH,CM,CS,E,P

FINLAND
Hewlett-Packard Oy
Revontulentie 7
SF-02100 **ESPOO** 10
Tel: (90) 455-0211
Telex: 121563 hewpa sf
A,CH,CM,CS,E,MS,P

SALES & SUPPORT OFFICES
Arranged alphabetically by country

FRANCE
Hewlett-Packard France
Le Ligoures
Bureau de Vente de Aix-en-Provence
Place Romée de Villeneuve
F-13090 **AIX-EN-PROVENCE**
Tel: (42) 59-41-02
Telex: 410770F
A,CH,CM,E,MS,P*

Hewlett-Packard France
Boite Postale No. 503
F-25026 **BESANCON**
28 Rue de la Republique
F-25000 **BESANCON**
Tel: (81) 83-16-22
CH,M

Hewlett-Packard France
Bureau de Vente de Lyon
Chemin des Mouilles
Boite Postale No. 162
F-69130 **ECULLY** Cédex
Tel: (78) 33-81-25
Telex: 310617F
A,CH,CM,CS,E,MP

Hewlett-Packard France
Immeuble France Evry
Tour Lorraine
Boulevard de France
F-91035 **EVRY** Cédex
Tel: (60) 77-96-60
Telex: 692315F
CM,E

Hewlett-Packard France
5th Avenue Raymond Chanas
F-38320 **EYBENS**
Tel: (76) 25-81-41
Telex: 980124 HP GRENOB EYBE
CH,CM

Hewlett-Packard France
Bâtiment Ampère
Rue de la Commune de Paris
Boite Postale 300
F-93153 **LE BLANC MESNIL**
Tel: (01) 865-44-52
Telex: 211032F
CH,CM,CS,E,MS

Hewlett-Packard France
Le Montesquieu
Avenue du President JF Kennedy
F-33700 **MERIGNAC**
Tel: (56) 34-00-84
Telex: 550105F
CH,CM,E,MS

Hewlett-Packard France
32 Rue Lothaire
F-57000 **METZ**
Tel: (87) 65-53-50
CH,CM

Hewlett-Packard France
3 Rue Julien Videment
F-44200 **NANTES**
Tel: (40) 48-09-44
CH**

Hewlett-Packard France
Zone Industrielle de Courtaboeuf
Avenue des Tropiques F-91947 Les Ulis Cédex **ORSAY**
Tel: (1) 907-78-25
Telex: 600048F
A,CH,CM,CS,E,MP,P

Hewlett-Packard France
Paris Porte-Maillot 13, 15 25
Boulevard De L'Amiral Bruix
F-75782 **PARIS** Cédex 16
Tel: (01) 502-12-20
Telex: 613663F
CH,CM,MS,P

Hewlett-Packard France
2 Allee de la Bourgonette
F-35100 **RENNES**
Tel: (99) 51-42-44
Telex: 740912F
CH,CM,E,MS,P*

Hewlett-Packard France
98 Avenue de Bretagne
F-76100 **ROUEN**
Tel: (35) 63-57-66 CH**,CS

Hewlett-Packard France
4 Rue Thomas Mann
Boite Postale 56
F-67200 **STRASBOURG**
Tel: (88) 28-56-46
Telex: 890141F
CH,CM,E,MS,P*

Hewlett-Packard France
20 Chemin de la Cépière
F-31081 **TOULOUSE** Cédex
Tel: (61) 40-11-12
Telex: 531639F
A,CH,CM,CS,E,P*

Hewlett-Packard France
Bureau de Vente de Lille
Immeuble Péricentre
Rue Van Gogh
F-59650 **VILLENEUVE D'ASQ**
Tel: (20) 91-41-25
Telex: 160124F
CH,CM,E,MS,P*

GERMAN FEDERAL REPUBLIC
Hewlett-Packard GmbH
Technisches Büro Berlin
Keithstrasse 2-4
D-1000 **BERLIN** 30
Tel: (030) 24-90-86
Telex: 018 3405 hpbln d
A,CH,CM,E,M,P,X

Hewlett-Packard GmbH
Technisches Büro Böblingen
Herrenberger Strasse 110
D-7030 **BÖBLINGEN**
Tel: (07031) 667-1
Telex: 07265739 bbn or 07265743
A,CH,CM,CS,E,MP,P

Hewlett-Packard GmbH
Technisches Büro Dusseldorf
Emanuel-Leutze-Strasse 1
D-4000 **DUSSELDORF**
Tel: (0211) 5971-1
Telex: 085/86 533 hpdd d
A,CH,CM,CS,E,MS,P

Hewlett-Packard GmbH
Vertriebszentrale Frankfurt
Berner Strasse 117
Postfach 560 140
D-6000 **FRANKFURT** 56
Tel: (0611) 50-04-1
Telex: 04 13249 hpffm d
A,CH,CM,CS,E,MP,P

Hewlett-Packard GmbH
Technisches Büro Hamburg
Kapstadtring 5
D-2000 **HAMBURG** 60
Tel: (040) 63804-1
Telex: 21 63 032 hphh d
A,CH,CM,CS,E,MS,P

Hewlett-Packard GmbH
Technisches Büro Hannover
Am Grossmarkt 6
D-3000 **HANNOVER** 91
Tel: (0511) 46-60-01
Telex: 092 3259
A,CH,CM,E,MS,P

Hewlett-Packard GmbH
Technisches Büro Mannheim
Rossiauer Weg 2-4
D-6800 **MANNHEIM**
Tel: (621) 70050
Telex: 0462105
A,C,E

Hewlett-Packard GmbH
Technisches Büro Neu Ulm
Messerschmittstrasse 7
D-7910 **NEU ULM**
Tel: 0731-70241
Telex: 712816 HP ULM-D
A,C,E*

Hewlett-Packard GmbH
Technisches Büro Nürnberg
Neumeyerstrasse 90
D-8500 **NÜRNBERG**
Tel: (0911) 56-30-83
Telex: 0623 860
CH,CM,E,MS,P

Hewlett-Packard GmbH
Technisches Büro München
Eschenstrasse 5
D-8021 **TAUFKIRCHEN**
Tel: (089) 6117-1
Telex: 0524985
A,CH,CM,E,MS,P

GREAT BRITAIN
Hewlett-Packard Ltd.
Trafalgar House
Navigation Road
ALTRINCHAM
Chesire WA14 1NU
Tel: (061) 928-6422
Telex: 668068
A,CH,CS,E,M

Hewlett-Packard Ltd.
Oakfield House, Oakfield Grove
Clifton
BRISTOL BS8 2BN
Tel: 36806
Telex: 444302
CH,CM,M,P

Hewlett-Packard Ltd.
14 Wesley Street
CASTLEFORD
Yorkshire WF10 1AE
Tel: (0977) 550016
Telex: 5557355
CH

Hewlett-Packard Ltd.
Fourier House
257-263 High Street
LONDON COLNEY
Herts., AL2 1HA
Tel: (0727) 24400
Telex: 1-8952716
CH,CS,E

Hewlett-Packard Ltd
Tradax House, St. Mary's Walk
MAIDENHEAD
Berkshire, SL6 1ST
Tel: (0628) 39151
CH,CS,E,P

Hewlett-Packard Ltd.
308/314 Kings Road
READING, Berkshire
Tel: 61022
Telex: 84-80-68
CM,P

Hewlett-Packard Ltd.
Quadrangle
106-118 Station Road
REDHILL, Surrey
Tel: (0737) 68655
Telex: 947234 CH,CS,E

Hewlett-Packard Ltd.
Westminster House
190 Stratford Road
SHIRLEY, Solihull
West Midlands B90 3BJ
Tel: (021) 7458800
Telex: 339105
CH

Hewlett-Packard Ltd.
King Street Lane
WINNERSH, Wokingham
Berkshire RG11 5AR
Tel: (0734) 784774
Telex: 847178
A,CS,E,M

GREECE
Kostas Karaynnis S.A.
8 Omirou Street
***ATHENS** 133*
Tel: 32-30-303, 32-37-371
Telex: 21 59 62 RKAR GR
A,CH,CM,CS,E,M,P

PLAISIO S.A.
G. Gerardos
24 Stournara Street
ATHENS
Tel: 36-11-160
Telex: 21 9492
P

GUATEMALA
IPESA
Avenida Reforma 3-48
***GUATEMALA** 9*
Tel: 316627, 314786
Telex: 4192 TELETRO GU
A,CH,CM,CS,E,M,P

HONG KONG
Hewlett-Packard Hong Kong, Ltd.
G.P.O. Box 795
5th Floor, Sun Hung Kai Centre
30 Harbour Road
HONG KONG
Tel: 5-8323211
Telex: 66678 HEWPA HX
Cable: HP ASIA LTD Hong Kong
E,CH,CS,P

Schmidt & Co. (Hong Kong) Ltd.
Wing On Centre, 28th Floor
Connaught Road, C.
HONG KONG
Tel: 5-455644
Telex: 74766 SCHMX HX
A,M

ICELAND
Elding Trading Company Inc.
Hafnarnvoli-Tryggvagotu
P.O. Box 895
*IS-**REYKJAVIK***
Tel: 1-58-20, 1-63-03
M

INDIA
Blue Star Ltd.
11 Magarath Road
***BANGALORE** 560 025*
Tel: 55668
Telex: 0845-430
Cable: BLUESTAR
A,CH,CM,CS,E

Blue Star Ltd.
Band Box House
Prabhadevi
***BOMBAY** 400 025*
Tel: 422-3101
Telex: 011-3751
Cable: BLUESTAR
A,M

Blue Star Ltd.
Sahas
414/2 Vir Savarkar Marg
Prabhadevi
***BOMBAY** 400 025*
Tel: 422-6155
Telex: 011-4093
Cable: FROSTBLUE
A,CH,CM,CS,E,M

Blue Star Ltd.
Kalyan, 19 Vishwas Colony
*Alkapuri, **BORODA**, 390 005*
Tel: 65235
Cable: BLUE STAR
A

Blue Star Ltd.
7 Hare Street
***CALCUTTA** 700 001*
Tel: 12-01-31
Telex: 021-7655
Cable: BLUESTAR
A,M

Blue Star Ltd.
133 Kodambakkam High Road
***MADRAS** 600 034*
Tel: 82057
Telex: 041-379
Cable: BLUESTAR
A,M

Blue Star Ltd.
Bhandari House, 7th/8th Floors
91 Nehru Place
***NEW DELHI** 110 024*
Tel: 682547
Telex: 031-2463
Cable: BLUESTAR
A,CH,CM,CS,E,M

Blue Star Ltd.
15/16:C Wellesley Rd.
***PUNE** 411 011*
Tel: 22775
Cable: BLUE STAR
A

Blue Star Ltd.
1-1-117/1 Sarojini Devi Road
***SECUNDERABAD** 500 033*
Tel: 70126
Telex: 0155-459
Cable: BLUEFROST
A,E

Blue Star Ltd.
T.C. 7/603 Poornima
Maruthankuzhi
***TRIVANDRUM** 695 013*
Tel: 65799
Telex: 0884-259
Cable: BLUESTAR
E

INDONESIA
BERCA Indonesia P.T.
P.O.Box 496/JKT.
Jl. Abdul Muis 62
JAKARTA
Tel: 373009
Telex: 46748 BERSAL IA
Cable: BERSAL JAKARTA
P

BERCA Indonesia P.T.
Wisma Antara Bldg., 17th floor
JAKARTA
A,CS,E,M

BERCA Indonesia P.T.
P.O. Box 174/SBY.
Jl. Kutei No. 11
SURABAYA
Tel: 68172
Telex: 31146 BERSAL SB
Cable: BERSAL-SURABAYA
A,E,M,P*

IRAQ
Hewlett-Packard Trading S.A.
Mansoor City 9B/3/7
BAGHDAD
Tel: 551-49-73
Telex: 2455 HEPAIRAQ IK
CH,CS

IRELAND
Hewlett-Packard Ireland Ltd.
Kestrel House
Clanwilliam Court
Lower Mount Street
DUBLIN 2, Eire
Tel: 680424, 680426
Telex: 30439
A,CH,CM,CS,E,M,P

Cardiac Services Ltd.
Kilmore Road
Artane
***DUBLIN** 5, Eire*
Tel: (01) 351820
Telex: 30439
M

ISRAEL
Electronics Engineering Division
Motorola Israel Ltd.
16 Kremenetski Street
P.O. Box 25016
TEL-AVIV 67899
Tel: 3-338973
Telex: 33569 Motil IL
Cable: BASTEL Tel-Aviv
A,CH,CM,CS,E,M,P

ITALY
Hewlett-Packard Italiana S.p.A.
Traversa 99C
Giulio Petrone, 19
I-70124 **BARI**
Tel: (080) 41-07-44
M

Hewlett-Packard Italiana S.p.A.
Via Martin Luther King, 38/111
I-40132 **BOLOGNA**
Tel: (051) 402394
Telex: 511630
CH,CM,E,MS

Hewlett-Packard Italiana S.p.A.
Via Principe Nicola 43G/C
I-95126 **CATANIA**
Tel: (095) 37-10-87
Telex: 970291 C,P

Hewlett-Packard Italiana S.p.A.
Via G. Di Vittorio 9
I-20063 **CERNUSCO SUL NAVLIGLIO**
Tel: (2) 903691
Telex: 334632
A,CH,CM,CS,E,MP,P

Hewlett-Packard Italiana S.p.A.
Via Nuova san Rocco A
Capodimonte, 62/A
I-80131 **NAPOLI**
Tel: (081) 7413544
A,CH,CM,E

Hewlett-Packard Italiana S.p.A.
Viale G. Modugno 33
I-16156 **GENOVA PEGLI**
Tel: (010) 68-37-07 E,C

Hewlett-Packard Italiana S.p.A.
Via Turazza 14
I-35100 **PADOVA**
Tel: (49) 664888
Telex: 430315
A,CH,CM,E,MS

Hewlett-Packard Italiana S.p.A.
Viale C. Pavese 340
I-00144 **ROMA**
Tel: (06) 54831
Telex: 610514
A,CH,CM,CS,E,MS,P*

Hewlett-Packard Italiana S.p.A.
Corso Giovanni Lanza 94
I-10133 **TORINO**
Tel: (011) 682245, 659308
Telex: 221079
CH,CM,E

JAPAN
Yokogawa-Hewlett-Packard Ltd.
Inoue Building
1-1348-3, Asahi-cho
ATSUGI, Kanagawa 243
Tel: (0462) 24-0451
CM,C*,E

Yokogawa-Hewlett-Packard Ltd.
Sannomiya-Daiichi Seimei-Bldg. 5F
69 Kyo-machi Chuo-ku
KOBE 650
Tel: (078) 392-4791
C,E

Yokogawa-Hewlett-Packard Ltd.
Kumagaya Asahi Yasoji Bldg 4F
3-4 Chome Tsukuba
KUMAGAYA, Saitama 360
Tel: (0485) 24-6563
CH,CM,E

Yokogawa-Hewlett-Packard Ltd.
Mito Mitsui Building
1-4-73, San-no-maru
MITO, Ibaragi 310
Tel: (0292) 25-7470
CH,CM,E

Yokogawa-Hewlett-Packard Ltd.
Sumitomo Seimei Nagoya Bldg.
11-2 Shimo-sasajima-cho
Nakamura-ku
NAGOYA, Aichi 450
Tel: (052) 571-5171
CH,CM,CS,E,MS

Yokogawa-Hewlett-Packard Ltd.
Chuo Bldg., 4th Floor
5-4-20 Nishinakajima, 5-chome
Yodogawa-ku
OSAKA, 532
Tel: (06) 304-6021
Telex: YHPOSA 523-3624
A,CH,CM,CS,E,MP,P*

Yokogawa-Hewlett-Packard Ltd.
3-29-21 Takaido-Higashi 3-chome
Suginami-ku
TOKYO 168
Tel: (03) 331-6111
Telex: 232-2024 YHPTOK
A,CH,CM,CS,E,MP,P*

Yokogawa-Hewlett-Packard Ltd.
3-30-4 Tsuruya-cho
Kanagawa-ku,
YOKOHAMA Kanagawa, 221
Tel: (045) 312-1252
CH,CM,E

JORDAN
Mouasher Cousins Company
P.O. Box 1387
AMMAN
Tel: 24907, 39907
Telex: 21456 SABCO JO
CH,E,M,P

KENYA
ADCOM Ltd., Inc.
City House, Wabera Street
P.O.Box 30635
NAIROBI
Tel: 331955
Telex: 22639
E,M

KOREA
Samsung Electronics
Industrial Products Div.
76-561 Yeoksam-Dong
Kangnam-Ku
C.P.O. Box 2775
SEOUL
Tel: 555-7555, 555-5447
Telex: K27364 SAMSAN
A,CH,CM,CS,E,M,P

KUWAIT
Al-Khalidya Trading & Contracting
P.O. Box 830 Safat
KUWAIT
Tel: 42-4910, 41-1726
Telex: 2481 Areeg kt
CH,E,M

Photo & Cine Equipment
P.O. Box 270 Safat
KUWAIT
Tel: 42-2846, 42-3801
Telex: 2247 Matin
P

LEBANON
G.M. Dolmadjian
Achralieh
P.O. Box 165.167
BEIRUT
Tel: 290293
MP

LUXEMBOURG
Hewlett-Packard Belgium S.A./N.V.
Blvd de la Woluwe, 100
Woluwedal
B-1200 ***BRUSSELS***
Tel: (02) 762-32-00
Telex: 23-494 paloben bru
A,CH,CM,CS,E,MP,P

MALAYSIA
Hewlett-Packard Sales (Malaysia)
Sdn. Bhd.
Suite 2.21/2.22
Bangunan Angkasa Raya
Jalan Ampang
KUALA LUMPUR
Tel: 483544
Telex: MA31011
A,CH,E,M,P*

Protel Engineering
Lot 319, Satok Road
P.O.Box 1917
*Kuching, **SARAWAK***
Tel: 53544
Telex: MA 70904 PROMAL
Cable: PROTELENG
A,E,M

MALTA
Philip Toledo Ltd.
Natabile Rd.
MRIEHEL
Tel: 447 47, 455 66
Telex: MW.649
P

MEXICO
Hewlett-Packard Mexicana, S.A. de C.V.
Avenida Periferico Sur No. 6501
Tepepan, Xochimilco
MEXICO CITY 23, D.F.
Tel: (905) 676-4600
Telex: 017-74-507
A,CH,CS,E,MS,P

Hewlett-Packard Mexicana, S.A. de C.V.
Rio Volga 600
Colonia del Valle
MONTERREY, N.L.
Tel: 78-42-93, 78-42-40, 78-42-41
Telex: 038-410
CH

MOROCCO
Dolbeau
81 rue Karatchi
CASABLANCA
Tel: 3041-82, 3068-38
Telex: 23051, 22822
E

Gerep
2 rue d'Agadir
Boite Postale 156
CASABLANCA
Tel: 272093, 272095
Telex: 23 739
P

NETHERLANDS
Hewlett-Packard Nederland B.V.
Van Heuven Goedhartlaan 121
NL 1181KK **AMSTELVEEN**
P.O. Box 667
NL 1080 AR **AMSTELVEEN**
Tel: (20) 47-20-21
Telex: 13 216
A,CH,CM,CS,E,MP,P

Hewlett-Packard Nederland B.V.
Bongerd 2
NL 2906VK **CAPPELLE**, A/D Ijessel
P.O. Box 41
NL2900 AA **CAPELLE**, Ijssel
Tel: (10) 51-64-44
Telex: 21261 HEPAC NL
A,CH,CM,CS

Koning en Hartman Electrotechnick B.V.
Koperwerf 30
2544 En den Haag
The **NETHERLANDS**
Tel: 070-210101
Telex: 31528
CM

NEW ZEALAND
Hewlett-Packard (N.Z.) Ltd.
169 Manukau Road
P.O. Box 26-189
Epsom, **AUCKLAND**
Tel: 687-159
Cable: HEWPACK Auckland
CH,CM,E,P*

Hewlett-Packard (N.Z.) Ltd.
4-12 Cruickshank Street
Kilbirnie, **WELLINGTON 3**
P.O. Box 9443
Courtenay Place, **WELLINGTON**
Tel: 877-199
Cable: HEWPACK Wellington
CH,CM,E,P

Northrop Instruments & Systems Ltd.
369 Khyber Pass Road
P.O. Box 8602
AUCKLAND
Tel: 794-091
Telex: 60605
A,M

Northrop Instruments & Systems Ltd.
110 Mandeville St.
P.O. Box 8388
CHRISTCHURCH
Tel: 486-928
Telex: 4203
A,M

Northrop Instruments & Systems Ltd.
Sturdee House
85-87 Ghuznee Street
P.O. Box 2406
WELLINGTON
Tel: 850-091
Telex: NZ 3380
A,M

NORTHERN IRELAND
Cardiac Services Company
95A Finaghy Road South
***BELFAST** BT 10 OBY*
Tel: (0232) 625-566
Telex: 747626
M

NORWAY
Hewlett-Packard Norge A/S
Folke Bernadottesvei 50
P.O. Box 3558
N-5033 **FYLLINGSDALEN** (BERGEN)
Tel: (05) 16-55-40
Telex: 16621 hpnas n
CH,CM,E

Hewlett-Packard Norge A/S
Oesterndalen 18
P.O. Box 34
N-1345 **OESTERAAS**
Tel: (02) 17-11-80
Telex: 16621 hpnas n
A*,CH,CM,E,MS,P

OMAN
Khimji Ramdas
P.O. Box 19
MUSCAT
Tel: 72-22-17, 72-22-25
Telex: 3289 BROKER MB MUSCAT
P

PAKISTAN
Mushko & Company Ltd.
10, Bazar Road
Sector G-6/4
ISLAMABAD
Tel: 26875
Cable: FEMUS Rawalpindi
A,E,M

Mushko & Company Ltd.
Oosman Chambers
Abdullah Haroon Road
***KARACHI** 0302*
Tel: 511027, 512927
Telex: 2894 MUSKO PK
Cable: COOPERATOR Karachi
*A,E,M,P**

PANAMA
Electrónico Balboa, S.A.
Calle Samuel Lewis
Apartado 4929
Panama 5
Edificio "Alfa" No. 2
CIUDAD DE PANAMA
Tel: 64-2700
Telex: 0383 ELECTRON PG
A,CM,E,M,P

SALES & SUPPORT OFFICES
Arranged alphabetically by country

PANAMA (Con't.)
Foto Internacional, S.A.
Free Zone Colon
Apartado 2068
COLON 3
Tel: 45-2333
Telex: 379 8626, 386 8722
P

PERU
Cía Electro Médica S.A.
Los Flamencos 145, San Isidro
Casilla 1030
LIMA 1
Tel: 41-4325, 41-3703
Telex: Pub. Booth 25306
A,CM,E,M,P

PHILIPPINES
The Online Advanced Systems Corporation
Rico House, Amorsolo Cor. Herrera Street
Legaspi Village, Makati
P.O. Box 1510
Metro MANILA
Tel: 85-35-81, 85-34-91, 85-32-21
Telex: 3274 ONLINE
A,CH,CS,E,M

Electronic Specialists and Proponents Inc.
690-B Epifanio de los Santos Avenue
Cubao, QUEZON CITY
P.O. Box 2649 Manila
Tel: 98-96-81, 98-96-82, 98-96-83
Telex: 40018, 42000 ITT GLOBE MACKAY BOOTH
P

POLAND
Buro Informasji Technicznej Hewlett-Packard
Ul Slawki 2, 6P
PL00-950 WARSZAWA
Tel: 39-59-62, 39-67-43
Telex: 812453 hepa pl

PORTUGAL
SOQUIMICA
Av. da Libedade 220-2
P-1298 LISBOA Codex
Tel: 56 21 81, 56 21 82
Telex: 13316

Telectra-Empresa Técnica de Equipmentos Eléctricos S.a.r.l.
Rua Rodrigo da Fonseca 103
P.O. Box 2531
P-LISBON 1
Tel: (19) 68-60-72
Telex: 12598
CH,CS,E,P

Mundinter
Intercambio Mundial de Comércio S.a.r.l
P.O. Box 2761
Avenida Antonio Augusto de Aguiar 138
P-LISBON
Tel: (19) 53-21-31, 53-21-37
Telex: 16691 munter p
M

PUERTO RICO
Hewlett-Packard Puerto Rico
P.O. Box 4407
CAROLINA, Puerto Rico 00630
Calle 272 Edificio 203
Urb. Country Club
RIO PIEDRAS, Puerto Rico 00924
Tel: (809) 762-7255
Telex: 345 0514
A,CH,CS

QATAR
Nasser Trading & Contracting
P.O. Box 1563
DOHA
Tel: 22170
Telex: 4439 NASSER
M

Computearabia
P.O. Box 2570
DOHA
Tel: 329515
Telex: 4806 CHPARB
P

ROMANIA
Hewlett-Packard Reprezentanta
Boulevard Nicolae Balcescu 16
BUCURESTI
Tel: 130725
Telex: 10440

SAUDI ARABIA
Modern Electronic Establishment
P.O. Box 193
AL-KHOBAR
Tel: 44-678, 44-813
Telex: 670136
Cable: ELECTA AL-KHOBAR
CH,CS,E,M,P

Modern Electronic Establishment
P.O. Box 1228, Baghdadiah Street
JEDDAH
Tel: 27-798
Telex: 401035
Cable: ELECTA JEDDAH
CH,CS,E,M,P

Modern Electronic Establishment
P.O. Box 2728
RIYADH
Tel: 62-596, 66-232
Telex: 202049
CH,CS,E,M,P

SCOTLAND
Hewlett-Packard Ltd.
Royal Bank Buildings
Swan Street
BRECHIN, Angus, Scotland
Tel: 3101, 3102
CH,CM

Hewlett-Packard Ltd.
SOUTH QUEENSFERRY
West Lothian, EH30 9GT
GB-Scotland
Tel: (031) 3311000
Telex: 72682
A,CH,CM,CS,E,M

SINGAPORE
Hewlett-Packard Singapore (Pty.) Ltd.
P.O. Box 58 Alexandra Post Office
SINGAPORE, 9115
6th Floor, Inchcape House
450-452 Alexandra Road
SINGAPORE 0511
Tel: 631788
Telex: HPSGSO RS 34209
Cable: HEWPACK, Singapore
A,CH,CS,E,MS,P

SOUTH AFRICA
Hewlett-Packard South Africa (Pty.) Ltd.
P.O. Box 120
Howard Place
Pine Park Center, Forest Drive, Pinelands
CAPE PROVINCE 7450
Tel: 53-7955, 53-7956, 53-7957
Telex: 57-0006
A,CH,CM,E,MS,P

Hewlett-Packard South Africa (Pty.) Ltd.
P.O. Box 37099
Overport
DURBAN 4067
Tel: 28-4178, 28-4179, 28-4110
CH,CM

Hewlett-Packard South Africa (Pty.) Ltd.
P.O. Box 33345
Glenstantia 0010 TRANSVAAL
1st Floor East
Constantia Park Ridge Shopping Centre
Constantia Park
PRETORIA
Tel: 01298-1126
Telex: 32163
CH,E

Hewlett-Packard South Africa (Pty.) Ltd.
Private Bag Wendywood
SANDTON 2144
Tel: 802-5111, 802-5125
Telex: 89-84782
Cable: HEWPACK Johannesburg
A,CH,CM,CS,E,MS,P

SPAIN
Hewlett-Packard Española S.A.
c/Entenza, 321
E-BARCELONA 29
Tel: (3) 322-24-51, 321-73-54
Telex: 52603 hpbee
A,CH,CM,CS,E,MS,P

Hewlett-Packard Española S.A.
c/San Vicente S/N
Edificio Albia II,7 B
E-BILBAO 1
Tel: (944) 423-8306, 423-8206
A,CH,CM,E,MS

Hewlett-Packard Española S.A.
Calle Jerez 3
E-MADRID 16
Tel: 458-2600
Telex: 23515 hpe
A,CM,E

Hewlett-Packard Española S.A.
c/o Costa Brava 13
Colonia Mirasierra
E-MADRID 34
Tel: 734-8061, 734-1162
CH,CS,M

Hewlett-Packard Española S.A.
Av Ramón y Cajal 1-9
Edificio Sevilla 1,
E-SEVILLA 5
Tel: 64-44-54, 64-44-58
Telex: 72933
A,CM,CS,MS,P

Hewlett-Packard Española S.A.
C/Ramon Gordillo, 1 (Entlo.3)
E-VALENCIA 10
Tel: 361-1354, 361-1358
CH,CM,P

SWEDEN
Hewlett-Packard Sverige AB
Enighetsvägen 3, Fack
P.O. Box 20502
S-16120 BROMMA
Tel: (08) 730-0550
Telex: (854) 10721 MESSAGES
Cable: MEASUREMENTS STOCKHOLM
A,CH,CM,CS,E,MS,P

Hewlett-Packard Sverige AB
Sunnanvagen 14K
S-22226 LUND
Tel: (46) 13-69-79
Telex: (854) 10721 (via BROMMA office)
CH,CM

Hewlett-Packard Sverige AB
Vastra Vintergatan 9
S-70344 OREBRO
Tel: (19) 10-48-80
Telex: (854) 10721 (via BROMMA office)
CH,CM

Hewlett-Packard Sverige AB
Frötallisgatan 30
S-42132 VÄSTRA-FRÖLUNDA
Tel: (031) 49-09-50
Telex: (854) 10721 (via BROMMA office)
CH,CM,E,P

SWITZERLAND
Hewlett-Packard (Schweiz) AG
Clarastrasse 12
CH-4058 BASLE
Tel: (61) 33-59-20
A,CM

Hewlett-Packard (Schweiz) AG
Bahnhoherweg 44
3018 BERN
Tel: (031) 56-24-22
CH,CM

Hewlett-Packard (Schweiz) AG
47 Avenue Blanc
CH-1202 GENEVA
Tel: (022) 32-30-05, 32-48-00
CH,CM,CS

Hewlett-Packard (Schweiz) AG
29 Chemin Château Bloc
CH-1219 LE LIGNON-Geneva
Tel: (022) 96-03-22
Telex: 27333 hpag ch
Cable: HEWPACKAG Geneva
A,CM,E,MS,P

Hewlett-Packard (Schweiz) AG
Zürcherstrasse 20
Allmend 2
CH-8967 WIDEN
Tel: (57) 50-111
Telex: 59933 hpag ch
Cable: HPAG CH
A,CH,CM,CS,E,MS,P

SYRIA
General Electronic Inc.
Nuri Basha-Ahnat Ebn Kays Street
P.O. Box 5781
DAMASCUS
Tel: 33-24-87
Telex: 11215 ITIKAL
Cable: ELECTROBOR DAMASCUS
E

Middle East Electronics
Place Azmé
Boite Postale 2308
DAMASCUS
Tel: 334592
Telex: 11304 SATACO SY
M,P

TAIWAN
Hewlett-Packard Far East Ltd.
Kaohsiung Office
2/F 68-2, Chung Cheng 3rd Road
KAOHSIUNG
Tel: 241-2318, 261-3253
E,MS,P

Hewlett-Packard Far East Ltd.
Taichung Office
#33, Cheng Tr Rd.
10th Floor, Room 5
TAICHUNG
Tel: (042) 289274

Hewlett-Packard Far East Ltd.
Taiwan Office
5th Floor
205 Tun Hwa North Road
TAIPEI
Tel:(02) 751-0404
Cable:HEWPACK Taipei
A,CH,CS,E,MS,P

Ing Lih Trading Co.
3rd Floor 18, Po-Ai Road
TAIPEI (100)
Tel: (02) 311-1914
Cable: INGLIH TAIPEI
A

THAILAND
Unimesa
30 Patpong Ave., Suriwong
BANGKOK 5
Tel: (234-091) (234-092)
Telex: TH 81160, TH 81038
Cable: UNIMESA Bangkok
A,C,E,M

Bangkok Business Equipment Ltd.
5/5-6 Dejo Road
BANGKOK
Tel: 234-8670, 234-8671
Telex: 87669-BEQUIPT TH
Cable: BUSIQUIPT Bangkok
P

TRINIDAD & TOBAGO
Caribbean Telecoms Ltd.
50/A Jerningham Avenue
P.O. Box 732
PORT-OF-SPAIN
Tel: 624-4213, 624-4214
Telex: 3235, 3272 HUGCO WG
A,CM,E,M,P

TUNISIA
Tunisie Electronique
31 Avenue de la Liberte
TUNIS
Tel: 280-144
E,P

Corema
1 ter. Av. de Carthage
TUNIS
Tel: 253-821
Telex: 12319 CABAM TN
M

TURKEY
Teknim Company Ltd.
Iran Caddesi No. 7
Kavaklidere, ANKARA
Tel: 275800
Telex: 42155
E

E.M.A.
Medina Eldem Sokak No.41/6
Yuksel Caddesi
ANKARA
Tel: 175 622
M,P

UNITED ARAB EMIRATES
Emitac Ltd.
P.O. Box 1641
SHARJAH
Tel: 354121, 354123
Telex: 68136 Emitac SL
CH,CS,E,M,P

UNITED KINGDOM
see: GREAT BRITAIN
NORTHERN IRELAND
SCOTLAND

UNITED STATES

Alabama
Hewlett-Packard Co.
700 Century Park South
Suite 128
BIRMINGHAM, AL 35226
Tel: (205) 822-6802
CH,CM,MP

Hewlett-Packard Co.
P.O. Box 4207
8290 Whitesburg Drive, S.E.
HUNTSVILLE, AL 35802
Tel: (205) 881-4591
CH,CM,CS,E,M*

Alaska
Hewlett-Packard Co.
1577 "C" Street, Suite 252
ANCHORAGE, AK 99510
Tel: (206) 454-3971
CH*,CM

Arizona
Hewlett-Packard Co.
2336 East Magnolia Street
PHOENIX, AZ 85034
Tel: (602) 273-8000
A,CH,CM,CS,E,MS

Hewlett-Packard Co.
2424 East Aragon Road
TUCSON, AZ 85702
Tel: (602) 889-4631
CH,CM,E,MS**

Arkansas
Hewlett-Packard Co.
P.O. Box 5646
Brady Station
LITTLE ROCK, AR 72215
Tel: (501) 376-1844, (501) 664-8773
CM,MS

California
Hewlett-Packard Co.
99 South Hill Dr.
BRISBANE, CA 94005
Tel: (415) 330-2500
CH,CM,CS

Hewlett-Packard Co.
7621 Canoga Avenue
CANOGA PARK, CA 91304
Tel: (213) 702-8300
A,CH,CM,CS,E,P

Hewlett-Packard Co.
1579 W. Shaw Avenue
FRESNO, CA 93771
Tel: (209) 224-0582
CM,MS

Hewlett-Packard Co.
1430 East Orangethorpe
FULLERTON, CA 92631
Tel: (714) 870-1000
CH,CM,CS,E,MP

Hewlett-Packard Co.
5400 W. Rosecrans Boulevard
LAWNDALE, CA 90260
P.O. Box 92105
LOS ANGELES, CA 90009
Tel: (213) 970-7500
CH,CM,CS,MP

Hewlett-Packard Co.
3939 Lankershim Blvd.
NORTH HOLLYWOOD, CA 91604
Tel: (213) 877-1282
Regional Headquarters

Hewlett-Packard Co.
3200 Hillview Avenue
PALO ALTO, CA 94304
Tel: (415) 857-8000
CH,CM,CS,E

Hewlett-Packard Co.
646 W. North Market Boulevard
SACRAMENTO, CA 95834
Tel: (916) 929-7222
A*,CH,CM,CS,E,MS

Hewlett-Packard Co.
9606 Aero Drive
P.O. Box 23333 **SAN DIEGO**, CA 92123
Tel: (714) 279-3200
CH,CM,CS,E,MP

Hewlett-Packard Co.
Suite A
5553 Hollister
SANTA BARBARA, CA 93111
Tel: (805) 964-3390

Hewlett-Packard Co.
3003 Scott Boulevard
SANTA CLARA, CA 95050
Tel: (408) 988-7000
A,CH,CM,CS,E,MP

Colorado
Hewlett-Packard Co.
24 Inverness Place, East
ENGLEWOOD, CO 80112
Tel: (303) 771-3455
A,CH,CM,CS,E,MS

Connecticut
Hewlett-Packard Co.
47 Barnes Industrial Road South
P.O. Box 5007
WALLINGFORD, CT 06492
Tel: (203) 265-7801
A,CH,CM,CS,E,MS

Florida
Hewlett-Packard Co.
P.O. Box 24210
2727 N.W. 62nd Street
FORT LAUDERDALE, FL 33309
Tel: (305) 973-2600
CH,CM,CS,E,MP

Hewlett-Packard Co.
4080 Woodcock Drive, #132
Brownett Building
JACKSONVILLE, FL 32207
Tel: (904) 398-0663
CM,C*,E*,MS**

Hewlett-Packard Co.
P.O. Box 13910
6177 Lake Ellenor Drive
ORLANDO, FL 32809
Tel: (305) 859-2900
A,CH,CM,CS,E,MS

Hewlett-Packard Co.
6425 N. Pensacola Blvd.
Suite 4, Building 1
PENSACOLA, FL 32575
Tel: (904) 476-8422
A,CM,MS

Hewlett-Packard Co.
110 South Hoover, Suite 120
Vanguard Bldg.
TAMPA, FL 33609
Tel: (813) 872-0900
A*,CH,CM,CS,E*,M*

Georgia
Hewlett-Packard Co.
P.O. Box 105005
2000 South Park Place
ATLANTA, GA 30339
Tel: (404) 955-1500
Telex: 810-766-4890
A,CH,CM,CS,E,MP

Hewlett-Packard Co.
Executive Park Suite 306
P.O. Box 816
AUGUSTA, GA 30907
Tel: (404) 736-0592
CM,MS

Hewlett-Packard Co.
P.O. Box 2103
1172 N. Davis Drive
WARNER ROBINS, GA 31098
Tel: (912) 923-8831
CM,E

Hawaii
Hewlett-Packard Co.
Kawaiahao Plaza, Suite 190
567 South King Street
HONOLULU, HI 96813
Tel: (808) 526-1555
A,CH,CM,E,MS

Idaho
Hewlett-Packard Co.
11311 Chinden Boulevard
BOISE, ID 83707
Tel: (208) 376-6000
CH,CM,M*

Illinois
Hewlett-Packard Co.
211 Prospect Road
BLOOMINGTON, IL 61701
Tel: (309) 663-0383
CH,CM,MS**

Hewlett-Packard Co.
1100 31st Street
DOWNERS GROVE, IL 60515
Tel: (312) 960-5760
CH,CM,CS

Hewlett-Packard Co.
5201 Tollview Drive
ROLLING MEADOWS, IL 60008
Tel: (312) 255-9800
A,CH,CM,CS,E,MP

Indiana
Hewlett-Packard Co.
P.O. Box 50807
7301 No. Shadeland Avenue
INDIANAPOLIS, IN 46250
Tel: (317) 842-1000
A,CH,CM,CS,E,MS

Iowa
Hewlett-Packard Co.
5815 S.W. 5th Street
DES MOINES, IA 50315
Tel: (515) 243-5876
CH,CM,MS**

Hewlett-Packard Co.
2415 Heinz Road
IOWA CITY, IA 52240
Tel: (319) 351-1020
CH,CM,E*,MS

Kansas
Hewlett-Packard Co.
1644 S. Rock
WICHITA, KA 67207
Tel: (316) 265-5200
CH,CM

Kentucky
Hewlett-Packard Co.
10170 Linn Station Road
Suite 525
LOUISVILLE, KY 40223
Tel: (502) 426-0100
A,CH,CM,CS,MS

Louisiana
Hewlett-Packard Co.
P.O. Box 1449
3229 Williams Boulevard
KENNER, LA 70062
Tel: (504) 443-6201
A,CH,CM,CS,E,MS

Maryland
Hewlett-Packard Co.
7121 Standard Drive
HANOVER, MD 21076
Tel: (301) 796-7700
A,CH,CM,CS,E,MS

Hewlett-Packard Co.
2 Choke Cherry Road
ROCKVILLE, MD 20850
Tel: (301) 948-6370
Telex: 710-828-9685
A,CH,CM,CS,E,MP

Massachusetts
Hewlett-Packard Co.
32 Hartwell Avenue
LEXINGTON, MA 02173
Tel: (617) 861-8960
A,CH,CM,CS,E,MP

Michigan
Hewlett-Packard Co.
23855 Research Drive
FARMINGTON HILLS, MI 48024
Tel: (313) 476-6400
A,CH,CM,CS,E,MP

Hewlett-Packard Co.
4326 Cascade Road S.E.
GRAND RAPIDS, MI 49506
Tel: (616) 957-1970
CH,CM,CS,MS

Minnesota
Hewlett-Packard Co.
2025 W. Larpenteur Ave.
ST. PAUL, MN 55113
Tel: (612) 644-1100
A,CH,CM,CS,E,MP

Mississippi
Hewlett-Packard Co.
P.O. Box 5028
322 N. Mart Plaza
JACKSON, MS 39216
Tel: (601) 982-9363
CM,MS

Missouri
Hewlett-Packard Co.
11131 Colorado Avenue
KANSAS CITY, MO 64137
Tel: (816) 763-8000
Telex: 910-771-2087
A,CH,CM,CS,E,MS

Hewlett-Packard Co.
1024 Executive Parkway
ST. LOUIS, MO 63141
Tel: (314) 878-0200
A,CH,CM,CS,E,MP

Nebraska
Hewlett-Packard
7101 Mercy Road
Suite 101, IBX Building
OMAHA, NE 68106
Tel: (402) 392-0948
CM,MS

Nevada
Hewlett-Packard Co.
Suite D-130
5030 Paradise Blvd.
LAS VEGAS, NV 89119
Tel: (702) 736-6610
CM,MS**

New Jersey
Hewlett-Packard Co.
Crystal Brook Professional Building
Route 35
EATONTOWN, NJ 07724
Tel: (201) 542-1384
A*,CM,C*,E*,P*

Hewlett-Packard Co.
W120 Century Road
PARAMUS, NJ 07652
Tel: (201) 265-5000
A,CH,CM,CS,E,MP

Hewlett-Packard Co.
60 New England Av. West
PISCATAWAY, NJ 08854
Tel: (201) 981-1199
A,CH,CM,CS,E

New Mexico
Hewlett-Packard Co.
P.O. Box 11634
11300 Lomas Blvd.,N.E.
ALBUQUERQUE, NM 87123
Tel: (505) 292-1330
Telex: 910-989-1185
CH,CM,CS,E,MS

New York
Hewlett-Packard Co.
5 Computer Drive South
ALBANY, NY 12205
Tel: (518) 458-1550
Telex: 710-444-4691
A,CH,CM,E,MS

Hewlett-Packard Co.
9600 Main Street
CLARENCE, NY 14031
Tel: (716) 759-8621
Telex: 710-523-1893
CH

Hewlett-Packard Co.
200 Cross Keys Office
FAIRPORT, NY 14450
Tel: (716) 223-9950
Telex: 510-253-0092
CH,CM,CS,E,MS

Hewlett-Packard Co.
No. 1 Pennsylvania Plaza
55th Floor
34th Street & 8th Avenue
NEW YORK, NY 10119
Tel: (212) 971-0800
CH,CM,CS,E*,M*

Hewlett-Packard Co.
5858 East Molloy Road
SYRACUSE NY 13211
Tel: (315) 455-2486
A,CH,CM,E,MS

Hewlett-Packard Co.
3 Crossways Park West
WOODBURY, NY 11797
Tel: (516) 921-0300
Telex: 510-221-2183
A,CH,CM,CS,E,MS

North Carolina
Hewlett-Packard Co.
P.O. Box 15579
2905 Guess Road (27705)
DURHAM, NC 27704
Tel: (919) 471-8466
C,M

Hewlett-Packard Co.
5605 Roanne Way
GREENSBORO, NC 27409
Tel: (919) 852-1800
A,CH,CM,CS,E,MS

Ohio
Hewlett-Packard Co.
9920 Carver Road
CINCINNATI, OH 45242
Tel: (513) 891-9870
CH,CM,CS,MS

Hewlett-Packard Co.
16500 Sprague Road
CLEVELAND, OH 44130
Tel: (216) 243-7300
Telex: 810-423-9430
A,CH,CM,CS,E,MS

Hewlett-Packard Co.
962 Crupper Ave.
COLUMBUS, OH 43229
Tel: (614) 436-1041
CH,CM,CS,E*

SALES & SUPPORT OFFICES
Arranged alphabetically by country

Ohio (Con't)
Hewlett-Packard Co.
330 Progress Rd.
DAYTON, OH 45449
Tel: (513) 859-8202
A,CH,CM,E*,MS

Oklahoma
Hewlett-Packard Co.
P.O. Box 366
1503 W. Gore Blvd., Suite #2
LAWTON, OK 73502
Tel: (405) 248-4248
C
Hewlett-Packard Co.
P.O. Box 32008
304 N. Meridan Avenue, Suite A
OKLAHOMA CITY, OK 73107
Tel: (405) 946-9499
A*,CH,CM,E*,MS
Hewlett-Packard Co.
Suite 121
9920 E. 42nd Street
TULSA, OK 74145
Tel: (918) 665-3300
A**,CH,CM,CS,M*

Oregon
Hewlett-Packard Co.
1500 Valley River Drive, Suite 330
EUGENE, OR 97401
Tel: (503) 683-8075
C
Hewlett-Packard Co.
9255 S. W. Pioneer Court
WILSONVILLE, OR 97070
Tel: (503) 682-8000
A,CH,CM,CS,E*,MS

Pennsylvania
Hewlett-Packard Co.
1021 8th Avenue
King of Prussia Industrial Park
KING OF PRUSSIA, PA 19406
Tel: (215) 265-7000
Telex: 510-660-2670
A,CH,CM,CS,E,MP
Hewlett-Packard Co.
111 Zeta Drive
PITTSBURGH, PA 15238
Tel: (412) 782-0400
A,CH,CM,CS,E,MP

South Carolina
Hewlett-Packard Co.
P.O. Box 6442
6941-0 N. Trenholm Road
COLUMBIA, SC 29260
Tel: (803) 782-6493
CH,CM,E,MS
Hewlett-Packard Co.
814 Wade Hampton Blvd.
Suite 10
GREENVILLE, SC 29609
Tel: (803) 232-0917
C

Tennessee
Hewlett-Packard Co.
P.O. Box 22490
224 Peters Road
Suite 102
KNOXVILLE, TN 37922
Tel: (615) 691-2371
A*,CH,CM,MS
Hewlett-Packard Co.
3070 Directors Row
MEMPHIS, TN 38131
Tel: (901) 346-8370
A,CH,CM,MS
Hewlett-Packard Co.
Suite 103
478 Craighead Street
NASHVILLE, TN 37204
Tel: (615) 383-9136
CM,MS**

Texas
Hewlett-Packard Co.
Suite 310W
7800 Shoalcreek Blvd.
AUSTIN, TX 78757
Tel: (512) 459-3143
CM,E
Hewlett-Packard Co.
Suite C-110
4171 North Mesa
EL PASO, TX 79902
Tel: (915) 533-3555
CH,CM,E*,MS**
Hewlett-Packard Co.
5020 Mark IV Parkway
FORT WORTH, TX 76106
Tel: (817) 625-6361
CM,C*
Hewlett-Packard Co.
P.O. Box 42816
10535 Harwin Street
HOUSTON, TX 77036
Tel: (713) 776-6400
A,CH,CM,CS,E,MP
Hewlett-Packard Co.
3309 67th Street
Suite 24
LUBBOCK, TX 79413
Tel: (806) 799-4472
M
Hewlett-Packard Co.
P.O. Box 1270
930 E. Campbell Rd.
RICHARDSON, TX 75081
Tel: (214) 231-6101
A,CH,CM,CS,E,MP
Hewlett-Packard Co.
205 Billy Mitchell Road
SAN ANTONIO, TX 78226
Tel: (512) 434-8241
CH,CM,CS,E,MS

Utah
Hewlett-Packard Co.
3530 W. 2100 South Street
SALT LAKE CITY, UT 84119
Tel: (801) 974-1700
A,CH,CM,CS,E,MS

Virginia
Hewlett-Packard Co.
P.O. Box 9669
2914 Hungary Spring Road
RICHMOND, VA 23228
Tel: (804) 285-3431
A,CH,CM,CS,E,MS
Hewlett-Packard Co.
P.O. Box 4786
3110 Peters Creek Road, N.W.
ROANOKE, VA 24015
Tel: (703) 563-2205
CH,CM,E**
Hewlett-Packard Co.
P.O. Box 12778
5700 Thurston Avenue
Suite 111
VIRGINIA BEACH, VA 23455
Tel: (804) 460-2471
CH,CM,MS

Washington
Hewlett-Packard Co.
15815 S.E. 37th Street
BELLEVUE, WA 98006
Tel: (206) 643-4000
A,CH,CM,CS,E,MP
Hewlett-Packard Co.
Suite A
708 North Argonne Road
SPOKANE, WA 99206
Tel: (509) 922-7000
CH,CM,CS

West Virginia
Hewlett-Packard Co.
4604 MacCorkle Ave., S.E.
CHARLESTON, WV 25304
Tel: (304) 925-0492
A,CM,MS

Wisconsin
Hewlett-Packard Co.
150 S. Sunny Slope Road
BROOKFIELD, WI 53005
Tel: (414) 784-8800
A,CH,CM,CS,E*,MP

URUGUAY
Pablo Ferrando S.A.C. e.I.
Avenida Italia 2877
Casilla de Correo 370
MONTEVIDEO
Tel: 80-2586
Telex: Public Booth 901
A,CM,E,M
Guillermo Kraft del Uruguay S.A.
Av. Lib. Brig. Gral. Lavalleja 2083
MONTEVIDEO
Tel: 234588, 234808, 208830
Telex: 6245 ACTOUR UY
P

U.S.S.R.
Hewlett-Packard Co.
Representative Office
Pokrovsky Blvd. 4/17 KV12
MOSCOW 101000 Tel: 294-2024
Telex: 7825 HEWPACK SU

VENEZUELA
Hewlett-Packard de Venezuela C.A.
Apartado 50933
3A Transversal Los Ruices Norte
Edificio Segre
CARACAS 1071
Tel: 239-4133
Telex: 25146 HEWPACK
A,CH,CS,E,MS,P

YUGOSLAVIA
Iskra-Commerce-Representation of Hewlett-Packard
Sava Centar Delegacija 30
Milentija Popovica 9
11170 ***BEOGRAD***
Tel: 638-762
Telex: 12042, 12322 YU SAV CEN
Iskra-Commerce-Representation of Hewlett-Packard
Koprska 46
61000 ***LJUBLJANA***
Tel: 321674, 315879
Telex:

ZAIRE
Computer & Industrial Engineering
25 Avenue de la Justice
B.P. 10-976
Kinshasha I/Zaire
GOMBE
Tel: 32063
Telex: 21-457 SGEKIN ZR
CH,CS

ZIMBABWE
Field Technical Sales
45 Kelvin Road, North
P.B. 3458
SALISBURY
Tel: 705 231
Telex: 4-122 RH
C,E,M,P

FOR COUNTRIES AND AREAS NOT LISTED:

CANADA
Ontario
Hewlett-Packard (Canada) Ltd.
6877 Goreway Drive
MISSISAUGA, Ontario L4V 1M8
Tel: (416) 678-9430
Telex: 610-492-4246

EASTERN USA
Maryland
Hewlett-Packard Co.
4 Choke Cherry Road
Rockville, MD 20850
Tel: (301) 258-2000

MIDWESTERN USA
Illinois
Hewlett-Packard Co.
5201 Tollview Drive
ROLLING MEADOWS, IL 60008
Tel: (312) 255-9800

SOUTHERN USA
Georgia
Hewlett-Packard Co.
P.O. Box 105005
450 Interstate N. Parkway
ATLANTA, GA 30339
Tel: (404) 955-1500

WESTERN USA
California
Hewlett-Packard Co.
3939 Lankersim Blvd.
LOS ANGELES, CA 91604
Tel: (213) 877-1282

EUROPEAN AREAS NOT LISTED, CONTACT SWITZERLAND
Hewlett-Packard S.A.
7 Rue du Bois-du-Lan
CH-1217 **MEYRIN 2**, Switzerland
Tel: (022) 83-81-11
Telex: 27835 hpse
Cable: HEWPACKSA Geneve

EAST EUROPEAN AREAS NOT LISTED, CONTACT AUSTRIA
Hewlett-Packard Ges.m.b.h.
Wehlistrasse 29
P.O. Box 7
A-1205 **VIENNA**
Tel: (222) 35-16-210
Telex: 135823/135066

MEDITERRANEAN AND MIDDLE EAST AREAS NOT LISTED, CONTACT GREECE
Hewlett-Packard S.A.
Mediterranean & Middle East Operations
32 Kifisias Ave.
Atrina Center
PARADISOS, Amaroussion
Tel: 808-1741-4
Telex: 21-6588 HPAT GR
Cable: HEWPACKSA Athens

INTERNATIONAL AREAS NOT LISTED, CONTACT OTHER AREAS
Hewlett-Packard Co.
Intercontinental Headquarters
3495 Deer Creek Road
PALO ALTO, CA 94304
Tel: (415) 857-1501
Telex: 034-8300
Cable: HEWPACK

FOR COUNTRIES AND AREAS NOT LISTED, CONTACT:

AFRICA

NORTHERN AND CENTRAL AFRICA

SWITZERLAND
Hewlett-Packard S.A.
7 Rue du Bois-du-Lan
CH-1217 **MEYRIN 2**, Switzerland
Tel: (022) 98-96-51
Telex: 27835 hpse
Cable: HEWPACKSA Geneve

ASIA

HONG KONG
Hewlett-Packard Asia Ltd.
6th Floor, Sun Hung Kai Center
30 Harbor Rd.
G.P.O. Box 795
HONG KONG
Tel: 5-832 3211
Telex: 66678 HEWPA HX
Cable: HP ASIA LTD Hong Kong

EUROPE

EASTERN EUROPE

AUSTRIA
Hewlett-Packard Ges.m.b.h.
Wehlistrasse 29
P.O.Box 7
A-1205 **VIENNA**
Tel: (222) 35-16-210
Telex: 135823/135066

NORTHERN EUROPE

THE NETHERLANDS
Hewlett-Packard S.A.
Ulienstede 475
NL-1183 AG **AMSTELVEEN**, The Netherlands
P.O.Box 999
NL-1180 AZ **AMSTELVEEN**, The Netherlands
Tel: 20 437771

SOUTH EASTERN EUROPE

SWITZERLAND
Hewlett-Packard S.A.
7 Rue du Bois-du-Lan
CH-1217 **MEYRIN 2**, Switzerland
Tel: (022) 98-96-51
Telex: 27835 hpse
Cable: HEWPACKSA Geneve
(Offices in the World Trade Center)

MEDITERRANEAN AND MIDDLE EAST

GREECE
Hewlett-Packard S.A.
Mediterranean and Middle East Operations
Atrina Centre
32 Kifissias Ave.
Amaroussion, **ATHENS**, Greece
Tel: 808-0359 808-0429
Telex: 21-6588
Cable: HEWPACKSA Athens

OTHER INTERNATIONAL AREAS
Hewlett-Packard Co.
Interconlinental Headquarters
3495 Deer Creek Road
PALO ALTO, CA 94304
Tel: (415) 857-1501
Telex: 034-8300
Cable: HEWPACK
August 1981 5952-6900

HEWLETT
PACKARD

08111–90002

Printed in the Federal Republic of Germany